Dec. 2009

# SERVICE MANUAL ADDENDUM

# IC-7800

## CONTENTS

PARTS LIST . . . . . 1
BOARD LAYOUTS . . . . . 65
VOLTAGE DIAGRAM . . . . . 67

# PARTS LIST

## [FRONT UNIT]

| REF NO. | PARTS NO. | DESCRIPTION | M. | H/V LOCATION |
|---|---|---|---|---|
| W1 | 8900015930 | CBL OPC-886A (P1,N10,L75) | | |
| W2 | 8900015930 | CBL OPC-886A (P1,N10,L75) | | |
| W3 | 8900012870 | CBL OPC-1331 (N=40,L=70) | | |
| W4 | 8900008670 | CBL OPC-849 (N:30 L:70) | | |
| W5 | 8900015930 | CBL OPC-886A (P1,N10,L75) | | |
| W6 | 8900015930 | CBL OPC-886A (P1,N10,L75) | | |
| W7 | 8900012880 | CBL OPC-1336 (N=18,L=70) | | |
| W8 | 8900015930 | CBL OPC-886A (P1,N10,L75) | | |
| W9 | 8900014871 | CBL OPC-1332A-1 (P0.5,N40,L100) | | |
| W10 | 8900014730 | CBL OPC-683A (P1,N10,L110) | | |
| W11 | 8900008670 | CBL OPC-849 (N:30 L:70) | | |
| W12 | 8900008670 | CBL OPC-849 (N:30 L:70) | | |
| W13 | 8900015930 | CBL OPC-886A (P1,N10,L75) | | |
| W14 | 8900008670 | CBL OPC-849 (N:30 L:70) | | |
| W15 | 8900015930 | CBL OPC-886A (P1,N10,L75) | | |
| EP1 | 6910015291 | UBD LTA070B790F | | |
| EP11 | 6910011090 | SUT RMS20-250-201-P | | |
| EP12 | 6910011090 | SUT RMS20-250-201-P | | |
| EP13 | 0880001460 | UBD EX-2500 #03 | | |
| EP101 | 6910015650 | E.OTH S-G2218-3#01 (MOUNT PLATE) | | |
| EP102 | 6910015650 | E.OTH S-G2218-3#01 (MOUNT PLATE) | | |

## [VR-A UNIT]

| REF NO. | PARTS NO. | DESCRIPTION | M. | H/V LOCATION |
|---|---|---|---|---|
| R1 | 7210002890 | VAR RK161221005J/RV-308 | | |
| R2 | 7210002890 | VAR RK161221005J/RV-308 | | |
| R3 | 7210002890 | VAR RK161221005J/RV-308 | | |
| R4 | 7210002890 | VAR RK161221005J/RV-308 | | |
| R11 | 7030003520 | S.RES ERJ3GEYJ 472 V (4.7 K) | B | 44.6/27 |
| R12 | 7030003520 | S.RES ERJ3GEYJ 472 V (4.7 K) | B | 44.6/25.7 |
| R13 | 7030003520 | S.RES ERJ3GEYJ 472 V (4.7 K) | B | 59.4/29.9 |
| R14 | 7030003520 | S.RES ERJ3GEYJ 472 V (4.7 K) | B | 44.6/24.4 |
| R15 | 7030003520 | S.RES ERJ3GEYJ 472 V (4.7 K) | B | 44.6/21.8 |
| R16 | 7030003520 | S.RES ERJ3GEYJ 472 V (4.7 K) | B | 44.6/23.1 |
| R17 | 7030003520 | S.RES ERJ3GEYJ 472 V (4.7 K) | B | 63.2/9.5 |
| R18 | 7030003520 | S.RES ERJ3GEYJ 472 V (4.7 K) | B | 44.6/20.5 |
| R21 | 7030003860 | S.RES ERJ3GE JPW V | B | 49.7/41.4 |
| R22 | 7030003860 | S.RES ERJ3GE JPW V | B | 52.3/42.4 |
| R23 | 7030003860 | S.RES ERJ3GE JPW V | B | 62.8/42.9 |
| R24 | 7030003860 | S.RES ERJ3GE JPW V | B | 56.4/31.1 |
| R25 | 7030003860 | S.RES ERJ3GE JPW V | B | 52.3/44.4 |
| R26 | 7030003860 | S.RES ERJ3GE JPW V | B | 27.7/10.6 |
| C11 | 4030006880 | S.CER C1608 JB 1H 472K-T | B | 49.7/36.4 |
| C12 | 4030006880 | S.CER C1608 JB 1H 472K-T | B | 65.4/36.9 |
| C13 | 4030006880 | S.CER C1608 JB 1H 472K-T | B | 52.3/37.4 |
| C14 | 4030006880 | S.CER C1608 JB 1H 472K-T | B | 62.8/37.9 |
| C15 | 4030006880 | S.CER C1608 JB 1H 472K-T | B | 49.7/38.4 |
| C16 | 4030006880 | S.CER C1608 JB 1H 472K-T | B | 65.4/38.9 |
| C17 | 4030006880 | S.CER C1608 JB 1H 472K-T | B | 52.3/39.4 |
| C18 | 4030006880 | S.CER C1608 JB 1H 472K-T | B | 62.8/39.9 |
| J1 | 6510021721 | S.CNR 30FLT-SM2-TB (LF) (SN) | B | 57.6/41.1 |
| J2 | 6510018921 | S.CNR B8B-PH-SM4-TB (LF) (SN) | B | 20/4.5 |
| J3 | 6510019971 | S.CNR 52808-1071 | B | 9.5/33.1 |
| J4 | 6510019971 | S.CNR 52808-1071 | B | 9.5/17.9 |
| EP2 | 6910012350 | S.BEA MMZ1608Y 102BT | B | 13.6/29.6 |
| EP3 | 6910012350 | S.BEA MMZ1608Y 102BT | B | 16.5/30.6 |
| EP5 | 6910012350 | S.BEA MMZ1608Y 102BT | B | 16.5/32.6 |
| EP6 | 6910012350 | S.BEA MMZ1608Y 102BT | B | 13.7/34.7 |
| EP7 | 6910012350 | S.BEA MMZ1608Y 102BT | B | 13.7/36.6 |
| EP8 | 6910012350 | S.BEA MMZ1608Y 102BT | B | 16.5/35.7 |
| EP9 | 6910012350 | S.BEA MMZ1608Y 102BT | B | 13.7/33.4 |
| EP10 | 6910012350 | S.BEA MMZ1608Y 102BT | B | 13.6/23.7 |
| EP11 | 6910012350 | S.BEA MMZ1608Y 102BT | B | 13.6/22.4 |
| EP12 | 6910012350 | S.BEA MMZ1608Y 102BT | B | 5.3/21.5 |
| EP13 | 6910012350 | S.BEA MMZ1608Y 102BT | B | 13.6/20.4 |
| EP14 | 6910012350 | S.BEA MMZ1608Y 102BT | B | 5.3/19.3 |
| EP15 | 6910012350 | S.BEA MMZ1608Y 102BT | B | 13.6/18.4 |
| EP16 | 6910012350 | S.BEA MMZ1608Y 102BT | B | 16.1/17.4 |
| EP17 | 6910012350 | S.BEA MMZ1608Y 102BT | B | 13.6/16.4 |
| EP18 | 6910012350 | S.BEA MMZ1608Y 102BT | B | 16.1/15.5 |
| EP19 | 6910012350 | S.BEA MMZ1608Y 102BT | B | 13.6/14.6 |
| EP20 | 6910012350 | S.BEA MMZ1608Y 102BT | B | 12.5/13.2 |
| EP21 | 6910012350 | S.BEA MMZ1608Y 102BT | B | 13.6/25 |

M.=Mounted side (T: Mounted on the Top side, B: Mounted on the Bottom side)
S.=Surface mount

## [VR-B UNIT]

| REF NO. | PARTS NO. | DESCRIPTION | M. | H/V LOCATION |
|---|---|---|---|---|
| R1 | 7210003160 | VAR RV-317 (RK0972210) | | |
| R2 | 7210003160 | VAR RV-317 (RK0972210) | | |
| R3 | 7030003520 | S.RES ERJ3GEYJ 472 V (4.7 K) | T | 28.6/2.7 |
| R4 | 7030003520 | S.RES ERJ3GEYJ 472 V (4.7 K) | T | 27.8/8.4 |
| R5 | 7030003520 | S.RES ERJ3GEYJ 472 V (4.7 K) | T | 10.5/2.7 |
| R6 | 7030003520 | S.RES ERJ3GEYJ 472 V (4.7 K) | T | 11.1/8.4 |
| C1 | 4030006880 | S.CER C1608 JB 1H 472K-T | T | 12.4/8.4 |
| C2 | 4030006880 | S.CER C1608 JB 1H 472K-T | T | 11.8/2.7 |
| C3 | 4030006880 | S.CER C1608 JB 1H 472K-T | T | 26.5/8.4 |
| C4 | 4030006880 | S.CER C1608 JB 1H 472K-T | T | 27.3/2.7 |
| J1 | 6510019971 | S.CNR 52808-1071 | T | 19.5/5 |

## [VR-C UNIT]

| REF NO. | PARTS NO. | DESCRIPTION | M. | H/V LOCATION |
|---|---|---|---|---|
| R1 | 7210003160 | VAR RV-317 (RK0972210) | | |
| R2 | 7210003160 | VAR RV-317 (RK0972210) | | |
| R3 | 7030003520 | S.RES ERJ3GEYJ 472 V (4.7 K) | T | 28.6/2.7 |
| R4 | 7030003520 | S.RES ERJ3GEYJ 472 V (4.7 K) | T | 27.8/8.4 |
| R5 | 7030003520 | S.RES ERJ3GEYJ 472 V (4.7 K) | T | 10.5/2.7 |
| R6 | 7030003520 | S.RES ERJ3GEYJ 472 V (4.7 K) | T | 11.1/8.4 |
| C1 | 4030006880 | S.CER C1608 JB 1H 472K-T | T | 12.4/8.4 |
| C2 | 4030006880 | S.CER C1608 JB 1H 472K-T | T | 11.8/2.7 |
| C3 | 4030006880 | S.CER C1608 JB 1H 472K-T | T | 26.5/8.4 |
| C4 | 4030006880 | S.CER C1608 JB 1H 472K-T | T | 27.3/2.7 |
| J1 | 6510019971 | S.CNR 52808-1071 | T | 19.5/5 |

M.=Mounted side (T: Mounted on the Top side, B: Mounted on the Bottom side)
S.=Surface mount

## [VR-D UNIT]

| REF NO. | PARTS NO. | DESCRIPTION | M. | H/V LOCATION |
|---|---|---|---|---|
| R1 | 7210001130 | VAR RK097111T005A (10KB) | | |
| R2 | 7210001130 | VAR RK097111T005A (10KB) | | |
| R3 | 7210001130 | VAR RK097111T005A (10KB) | | |
| R4 | 7210001130 | VAR RK097111T005A (10KB) | | |
| R5 | 7210001130 | VAR RK097111T005A (10KB) | | |
| R6 | 7210001130 | VAR RK097111T005A (10KB) | | |
| R7 | 7210001130 | VAR RK097111T005A (10KB) | | |
| R11 | 7030003520 | S.RES ERJ3GEYJ 472 V (4.7 K) | B | 11.3/3.6 |
| R12 | 7030003520 | S.RES ERJ3GEYJ 472 V (4.7 K) | B | 28.4/3.6 |
| R13 | 7030003520 | S.RES ERJ3GEYJ 472 V (4.7 K) | B | 45.2/3.6 |
| R14 | 7030003520 | S.RES ERJ3GEYJ 472 V (4.7 K) | B | 62.3/3.6 |
| R15 | 7030003520 | S.RES ERJ3GEYJ 472 V (4.7 K) | B | 79.2/3.6 |
| R16 | 7030003520 | S.RES ERJ3GEYJ 472 V (4.7 K) | B | 96.3/3.6 |
| R17 | 7030003520 | S.RES ERJ3GEYJ 472 V (4.7 K) | B | 100.5/6.5 |
| C11 | 4030006880 | S.CER C1608 JB 1H 472K-T | B | 11.3/2 |
| C12 | 4030006880 | S.CER C1608 JB 1H 472K-T | B | 28.4/2 |
| C13 | 4030006880 | S.CER C1608 JB 1H 472K-T | B | 45.2/2 |
| C14 | 4030006880 | S.CER C1608 JB 1H 472K-T | B | 62.3/2 |
| C15 | 4030006880 | S.CER C1608 JB 1H 472K-T | B | 79.2/2 |
| C16 | 4030006880 | S.CER C1608 JB 1H 472K-T | B | 96.3/2 |
| C17 | 4030006880 | S.CER C1608 JB 1H 472K-T | B | 100.5/4.9 |
| J1 | 6510019971 | S.CNR 52808-1071 | B | 43/16 |

## [SW-A UNIT]

| REF NO. | PARTS NO. | DESCRIPTION | M. | H/V LOCATION |
|---|---|---|---|---|
| R2 | 7030003400 | S.RES ERJ3GEYJ 471 V (470) | B | 8.3/85.5 |
| R3 | 7030003420 | S.RES ERJ3GEYJ 681 V (680) | B | 8.3/53.1 |
| R4 | 7030003400 | S.RES ERJ3GEYJ 471 V (470) | B | 8.3/56.1 |
| R6 | 7030003400 | S.RES ERJ3GEYJ 471 V (470) | B | 26.8/42.4 |
| R7 | 7030003400 | S.RES ERJ3GEYJ 471 V (470) | B | 33/41.6 |
| R8 | 7030003400 | S.RES ERJ3GEYJ 471 V (470) | B | 51.6/40.4 |
| R9 | 7030003400 | S.RES ERJ3GEYJ 471 V (470) | B | 62.5/36 |
| R10 | 7030003400 | S.RES ERJ3GEYJ 471 V (470) | B | 75.6/36 |
| R11 | 7030003400 | S.RES ERJ3GEYJ 471 V (470) | B | 90/37.5 |
| R12 | 7030003400 | S.RES ERJ3GEYJ 471 V (470) | B | 57.8/82.8 |
| R13 | 7030003480 | S.RES ERJ3GEYJ 222 V (2.2 K) | B | 3.6/40.8 |
| R14 | 7030003520 | S.RES ERJ3GEYJ 472 V (4.7 K) | B | 48.4/80.4 |
| R15 | 7030003480 | S.RES ERJ3GEYJ 222 V (2.2 K) | B | 29.6/39.4 |
| R16 | 7030003520 | S.RES ERJ3GEYJ 472 V (4.7 K) | B | 41.1/39.4 |
| R17 | 7030003480 | S.RES ERJ3GEYJ 222 V (2.2 K) | B | 66.3/36 |
| R18 | 7030003520 | S.RES ERJ3GEYJ 472 V (4.7 K) | B | 79.5/38.1 |
| R19 | 7030003540 | S.RES ERJ3GEYJ 682 V (6.8 K) | B | 57.3/40.5 |
| R20 | 7030003540 | S.RES ERJ3GEYJ 682 V (6.8 K) | B | 29.6/40.7 |
| R21 | 7030003540 | S.RES ERJ3GEYJ 682 V (6.8 K) | B | 2.4/38.1 |
| R22 | 7030003480 | S.RES ERJ3GEYJ 222 V (2.2 K) | B | 100.2/66.5 |
| R23 | 7030003520 | S.RES ERJ3GEYJ 472 V (4.7 K) | B | 101.5/63.3 |
| R24 | 7030003580 | S.RES ERJ3GEYJ 153 V (15 K) | B | 98.6/41.5 |
| R25 | 7030003480 | S.RES ERJ3GEYJ 222 V (2.2 K) | B | 100.3/19.2 |
| R26 | 7030003520 | S.RES ERJ3GEYJ 472 V (4.7 K) | B | 100.3/7.2 |
| R27 | 7030003540 | S.RES ERJ3GEYJ 682 V (6.8 K) | B | 98.6/77.5 |
| R28 | 7030003540 | S.RES ERJ3GEYJ 682 V (6.8 K) | B | 96.2/35.2 |
| R29 | 7030003580 | S.RES ERJ3GEYJ 153 V (15 K) | B | 51.2/53.1 |
| R30 | 7030003400 | S.RES ERJ3GEYJ 471 V (470) | B | 47/58 |
| C1 | 4030011600 | S.CER C1608 JB 1E 104K-T | B | 99.2/63 |
| C2 | 4030011600 | S.CER C1608 JB 1E 104K-T | B | 88.8/59.1 |
| C3 | 4030011600 | S.CER C1608 JB 1E 104K-T | B | 99.4/60.4 |
| C4 | 4030011600 | S.CER C1608 JB 1E 104K-T | B | 90.1/59.1 |
| C5 | 4030011600 | S.CER C1608 JB 1E 104K-T | B | 98.9/59 |
| C6 | 4030011600 | S.CER C1608 JB 1E 104K-T | B | 53.3/77.2 |
| C7 | 4030011600 | S.CER C1608 JB 1E 104K-T | B | 84.8/80.1 |
| C8 | 4030011600 | S.CER C1608 JB 1E 104K-T | B | 83.5/65.3 |
| C9 | 4030011600 | S.CER C1608 JB 1E 104K-T | B | 88/52.2 |
| J1 | 6510019971 | S.CNR 52808-1071 | B | 46.7/72.7 |
| J2 | 6510019971 | S.CNR 52808-1071 | B | 83.7/72.7 |
| J3 | 6510022471 | S.CNR 40FLT-SM2-TB (LF) (SN) | B | 94.3/58.7 |
| DS5 | 5040002980 | S.LED SML-512DW-T86 | T | 8.5/87.6 |
| DS6 | 5040002930 | S.LED SML-512MW T86 | T | 8.5/86.3 |
| DS7 | 5040002930 | S.LED SML-512MW T86 | T | 8.5/41.4 |
| DS8 | 5040002930 | S.LED SML-512MW T86 | T | 26.2/43 |
| DS9 | 5040002930 | S.LED SML-512MW T86 | T | 37.7/43 |
| DS10 | 5040002930 | S.LED SML-512MW T86 | T | 49.2/43 |
| DS11 | 5040002930 | S.LED SML-512MW T86 | T | 63.2/43 |
| DS12 | 5040002930 | S.LED SML-512MW T86 | T | 56.2/84.4 |
| DS13 | 5040002930 | S.LED SML-512MW T86 | T | 74.7/43 |
| DS14 | 5040002930 | S.LED SML-512MW T86 | T | 86.2/43 |
| DS15 | 5040002990 | S.LED SML-512UWT86 | T | 8.5/56.4 |
| DS16 | 5040002930 | S.LED SML-512MW T86 | T | 8.5/55.1 |
| DS17 | 5040002930 | S.LED SML-512MW T86 | T | 56.2/56.4 |
| S1 | 2260002740 | S.SW LS8J2M-T | T | 9.7/77.2 |
| S2 | 2260002740 | S.SW LS8J2M-T | T | 8.2/62.5 |
| S3 | 2260002740 | S.SW LS8J2M-T | T | 8.2/48.8 |
| S4 | 2260002740 | S.SW LS8J2M-T | T | 8.2/35.1 |
| S5 | 2260002740 | S.SW LS8J2M-T | T | 37.5/38.9 |
| S6 | 2260002740 | S.SW LS8J2M-T | T | 26/38.9 |
| S7 | 2260002740 | S.SW LS8J2M-T | T | 49/38.9 |
| S8 | 2260002740 | S.SW LS8J2M-T | T | 63/38.9 |
| S11 | 2260002740 | S.SW LS8J2M-T | T | 56/79 |
| S12 | 2260002740 | S.SW LS8J2M-T | T | 74.5/38.9 |
| S13 | 2260002740 | S.SW LS8J2M-T | T | 86/38.9 |
| S14 | 2260002740 | S.SW LS8J2M-T | T | 100.3/82.7 |
| S15 | 2260002740 | S.SW LS8J2M-T | T | 100.3/70.7 |
| S16 | 2260002740 | S.SW LS8J2M-T | T | 100.3/58.7 |
| S17 | 2260002740 | S.SW LS8J2M-T | T | 100.3/46.7 |
| S18 | 2260002740 | S.SW LS8J2M-T | T | 100.3/34.7 |
| S19 | 2260002740 | S.SW LS8J2M-T | T | 100.3/22.7 |
| S20 | 2260002740 | S.SW LS8J2M-T | T | 100.3/10.7 |
| S21 | 2260002740 | S.SW LS8J2M-T | T | 56/51 |

M.=Mounted side (T: Mounted on the Top side, B: Mounted on the Bottom side)
S.=Surface mount

## [SW-B UNIT]

| REF NO. | PARTS NO. | DESCRIPTION | M. | H/V LOCATION |
|---|---|---|---|---|
| J1 | 6510020531 | S.CNR 52808-1871 | B | 112/20.3 |
| S1 | 2260002740 | S.SW LS8J2M-T | T | 16.8/24.6 |
| S2 | 2260002740 | S.SW LS8J2M-T | T | 38.8/24.6 |
| S3 | 2260002740 | S.SW LS8J2M-T | T | 60.8/24.6 |
| S4 | 2260002740 | S.SW LS8J2M-T | T | 82.8/24.6 |
| S5 | 2260002740 | S.SW LS8J2M-T | T | 104.8/24.6 |
| S6 | 2260002740 | S.SW LS8J2M-T | T | 126.8/24.6 |
| S7 | 2260002740 | S.SW LS8J2M-T | T | 148.8/24.6 |
| S8 | 2260002740 | S.SW LS8J2M-T | T | 16.8/15.2 |
| S9 | 2260002740 | S.SW LS8J2M-T | T | 38.8/15.2 |
| S10 | 2260002740 | S.SW LS8J2M-T | T | 60.8/15.2 |
| S11 | 2260002740 | S.SW LS8J2M-T | T | 82.8/15.2 |
| S12 | 2260002740 | S.SW LS8J2M-T | T | 104.8/15.2 |
| S13 | 2260002740 | S.SW LS8J2M-T | T | 126.8/15.2 |
| S14 | 2260002740 | S.SW LS8J2M-T | T | 148.8/15.2 |
| S15 | 2260002740 | S.SW LS8J2M-T | T | 125.5/3.1 |
| S16 | 2260002740 | S.SW LS8J2M-T | T | 145.2/3.1 |
| S17 | 2260002740 | S.SW LS8J2M-T | T | 167.3/3.1 |

## [SW-C UNIT]

| REF NO. | PARTS NO. | DESCRIPTION | M. | H/V LOCATION |
|---|---|---|---|---|
| R1 | 7030003480 | S.RES ERJ3GEYJ 222 V (2.2 K) | B | 32.7/126.7 |
| R2 | 7030003520 | S.RES ERJ3GEYJ 472 V (4.7 K) | B | 30.7/122.6 |
| R3 | 7030003580 | S.RES ERJ3GEYJ 153 V (15 K) | B | 30.7/118.1 |
| R4 | 7030003540 | S.RES ERJ3GEYJ 682 V (6.8 K) | B | 30.6/125.7 |
| R5 | 7030003480 | S.RES ERJ3GEYJ 222 V (2.2 K) | B | 30.6/100.1 |
| R6 | 7030003520 | S.RES ERJ3GEYJ 472 V (4.7 K) | B | 30.6/97.4 |
| R7 | 7030003580 | S.RES ERJ3GEYJ 153 V (15 K) | B | 31.9/94.7 |
| R8 | 7030003540 | S.RES ERJ3GEYJ 682 V (6.8 K) | B | 31.9/101.7 |
| R9 | 7030003480 | S.RES ERJ3GEYJ 222 V (2.2 K) | B | 34.8/71.3 |
| R10 | 7030003520 | S.RES ERJ3GEYJ 472 V (4.7 K) | B | 35.5/69.3 |
| R11 | 7030003580 | S.RES ERJ3GEYJ 153 V (15 K) | B | 35.5/66.6 |
| R12 | 7030003540 | S.RES ERJ3GEYJ 682 V (6.8 K) | B | 32.7/84.5 |
| R13 | 7030003480 | S.RES ERJ3GEYJ 222 V (2.2 K) | B | 43.1/46.9 |
| R14 | 7030003520 | S.RES ERJ3GEYJ 472 V (4.7 K) | B | 49.2/44.4 |
| R15 | 7030003540 | S.RES ERJ3GEYJ 682 V (6.8 K) | B | 43.1/50.6 |
| R51 | 7030003400 | S.RES ERJ3GEYJ 471 V (470) | B | 38.3/124.2 |
| R52 | 7030003400 | S.RES ERJ3GEYJ 471 V (470) | B | 41.2/124.2 |
| R53 | 7030003400 | S.RES ERJ3GEYJ 471 V (470) | B | 37.9/107.7 |
| R54 | 7030003400 | S.RES ERJ3GEYJ 471 V (470) | B | 46.6/102.1 |
| R55 | 7030003400 | S.RES ERJ3GEYJ 471 V (470) | B | 43.2/98.8 |
| R56 | 7030003400 | S.RES ERJ3GEYJ 471 V (470) | B | 46.6/99.4 |
| R57 | 7030003400 | S.RES ERJ3GEYJ 471 V (470) | B | 48.7/89.9 |
| R58 | 7030003400 | S.RES ERJ3GEYJ 471 V (470) | B | 48.7/93.3 |
| C1 | 4030011600 | S.CER C1608 JB 1E 104K-T | B | 28.9/94.5 |
| C2 | 4030011600 | S.CER C1608 JB 1E 104K-T | B | 41.2/82 |
| C3 | 4030011600 | S.CER C1608 JB 1E 104K-T | B | 32.1/71.3 |
| C4 | 4030011600 | S.CER C1608 JB 1E 104K-T | B | 43.5/82.4 |
| J1 | 6510021721 | S.CNR 30FLT-SM2-TB (LF) (SN) | B | 37.9/89 |
| J2 | 6510019971 | S.CNR 52808-1071 | B | 44.2/113.1 |
| DS51 | 5040002930 | S.LED SML-512MW T86 | T | 36.5/123.3 |
| DS52 | 5040002930 | S.LED SML-512MW T86 | T | 48/123.3 |
| DS53 | 5040002930 | S.LED SML-512MW T86 | T | 36.5/104.8 |
| DS54 | 5040002930 | S.LED SML-512MW T86 | T | 48/104.8 |
| DS55 | 5040002930 | S.LED SML-512MW T86 | T | 36.5/94.8 |
| DS56 | 5040002930 | S.LED SML-512MW T86 | T | 48/94.8 |
| DS57 | 5040002930 | S.LED SML-512MW T86 | T | 36.5/84.8 |
| DS58 | 5040002930 | S.LED SML-512MW T86 | T | 48/84.8 |
| S1 | 2260002740 | S.SW LS8J2M-T | T | 36.7/129.1 |
| S2 | 2260002740 | S.SW LS8J2M-T | T | 48.2/129.1 |
| S3 | 2260002740 | S.SW LS8J2M-T | T | 36.7/118.9 |
| S4 | 2260002740 | S.SW LS8J2M-T | T | 48.2/118.9 |
| S5 | 2260002740 | S.SW LS8J2M-T | T | 36.7/100.4 |
| S6 | 2260002740 | S.SW LS8J2M-T | T | 48.2/100.4 |
| S7 | 2260002740 | S.SW LS8J2M-T | T | 36.7/90.4 |
| S8 | 2260002740 | S.SW LS8J2M-T | T | 48.2/90.4 |
| S9 | 2260002740 | S.SW LS8J2M-T | T | 36.7/80.4 |
| S10 | 2260002740 | S.SW LS8J2M-T | T | 48.2/80.4 |
| S11 | 2260002740 | S.SW LS8J2M-T | T | 36.7/70 |
| S12 | 2260002740 | S.SW LS8J2M-T | T | 36.7/61.2 |
| S13 | 2260002740 | S.SW LS8J2M-T | T | 36.7/52.4 |
| S14 | 2260002740 | S.SW LS8J2M-T | T | 36.5/42.7 |
| S15 | 2260002740 | S.SW LS8J2M-T | T | 61.5/42.7 |
| S16 | 2260002740 | S.SW LS8J2M-T | T | 12.2/32.4 |
| S17 | 2260002740 | S.SW LS8J2M-T | T | 74.3/27.4 |
| S18 | 2260002740 | S.SW LS8J2M-T | T | 12.2/14.7 |
| S19 | 2260002740 | S.SW LS8J2M-T | T | 75.2/14.2 |
| S20 | 2260002740 | S.SW LS8J2M-T | T | 12.2/2.3 |
| S21 | 2260002740 | S.SW LS8J2M-T | T | 75.2/2.3 |
| S22 | 2260002740 | S.SW LS8J2M-T | T | 25.7/2.3 |

M.=Mounted side (T: Mounted on the Top side, B: Mounted on the Bottom side)
S.=Surface mount

## [JACK UNIT]

| REF NO. | PARTS NO. | DESCRIPTION | M. | H/V LOCATION |
|---|---|---|---|---|
| L1 | 6200003950 | S.COL HF50ACC 322513-T | T | 33/7.8 |
| L2 | 6200003950 | S.COL HF50ACC 322513-T | T | 23.5/2.7 |
| L3 | 6200003950 | S.COL HF50ACC 322513-T | T | 16.2/2 |
| L4 | 6180000900 | COL LAL 03NA 101K | | |
| L5 | 6180000900 | COL LAL 03NA 101K | | |
| L6 | 6180000900 | COL LAL 03NA 101K | | |
| L101 | 6180000900 | COL LAL 03NA 101K | | |
| L102 | 6180000900 | COL LAL 03NA 101K | | |
| L103 | 6180000900 | COL LAL 03NA 101K | | |
| R1 | 7030006060 | S.RES ERJ12YJ100U (10) | T | 24.1/6.1 |
| R2 | 7030006060 | S.RES ERJ12YJ100U (10) | T | 16.8/5.4 |
| C1 | 4030006880 | S.CER C1608 JB 1H 472K-T | B | 26.4/2.1 |
| C2 | 4030006880 | S.CER C1608 JB 1H 472K-T | B | 26.4/4.8 |
| C3 | 4030006880 | S.CER C1608 JB 1H 472K-T | B | 20.7/6.9 |
| C101 | 4030006880 | S.CER C1608 JB 1H 472K-T | B | 15.3/6.9 |
| C102 | 4030006880 | S.CER C1608 JB 1H 472K-T | B | 11.6/2.1 |
| J1 | 6510019971 | S.CNR 52808-1071 | B | 19/3.2 |
| J2 | 6510023891 | CNR S-G4617#01F | | |
| J102 | 6510023900 | CNR LGR4619-7000 | | |
| EP101 | 6910012350 | S.BEA MMZ1608Y 102BT | B | 15.3/8.2 |
| EP102 | 6910012350 | S.BEA MMZ1608Y 102BT | B | 10.3/2.1 |

## [MIC UNIT]

| REF NO. | PARTS NO. | DESCRIPTION | M. | H/V LOCATION |
|---|---|---|---|---|
| L1 | 6200003261 | S.COL NLV32T-101J | B | 4.5/17.8 |
| L2 | 6200003261 | S.COL NLV32T-101J | B | 2.4/12.5 |
| L3 | 6200003261 | S.COL NLV32T-101J | B | 4.5/2 |
| L4 | 6200003950 | S.COL HF50ACC 322513-T | B | 15.2/15.1 |
| C1 | 4030006880 | S.CER C1608 JB 1H 472K-T | B | 8.6/16.1 |
| C2 | 4030006880 | S.CER C1608 JB 1H 472K-T | B | 2.8/5.5 |
| C3 | 4030006880 | S.CER C1608 JB 1H 472K-T | B | 14.2/12.3 |
| C4 | 4030007130 | S.CER C1608 CH 1H 101J-T | B | 10.1/11.2 |
| C5 | 4030006880 | S.CER C1608 JB 1H 472K-T | B | 1.5/5.5 |
| C6 | 4030006880 | S.CER C1608 JB 1H 472K-T | B | 9.6/.9 |
| C7 | 4030006880 | S.CER C1608 JB 1H 472K-T | B | 7.7/10.1 |
| C8 | 4030007090 | S.CER C1608 CH 1H 470J-T | B | 9.4/13.9 |
| J1 | 6510000191 | CNR FM214-8SS (P) -1 | | |
| J2 | 6510019971 | S.CNR 52808-1071 | B | 12.7/20.2 |
| EP2 | 6910012350 | S.BEA MMZ1608Y 102BT | B | 4.1/6.3 |
| EP3 | 6910012350 | S.BEA MMZ1608Y 102BT | B | 7.6/2 |
| EP4 | 6910012350 | S.BEA MMZ1608Y 102BT | B | 10.4/16 |
| EP5 | 6910012350 | S.BEA MMZ1608Y 102BT | B | 2.7/8.1 |
| EP6 | 6910012350 | S.BEA MMZ1608Y 102BT | B | 7.7/7.7 |
| EP7 | 6910015130 | S.BEA MMZ1608D 301BT | B | 17.2/10.8 |
| EP8 | 6910015130 | S.BEA MMZ1608D 301BT | B | 15.9/10.8 |
| EP9 | 6910015130 | S.BEA MMZ1608D 301BT | B | 10.2/6.9 |
| EP10 | 6910015130 | S.BEA MMZ1608D 301BT | B | 11.5/9.1 |
| EP11 | 6910012350 | S.BEA MMZ1608Y 102BT | B | 5.4/14.1 |

M.=Mounted side (T: Mounted on the Top side, B: Mounted on the Bottom side)
S.=Surface mount

## [TENKEY UNIT]

| REF NO. | PARTS NO. | DESCRIPTION | | M. | H/V LOCATION |
|---|---|---|---|---|---|
| IC1 | 1130011510 | S.IC | BU2099FV-E2 | B | 37.5/67.3 |
| IC2 | 1130011510 | S.IC | BU2099FV-E2 | B | 33.5/31.8 |
| R1 | 7030003480 | S.RES | ERJ3GEYJ 222 V (2.2 K) | B | 16.3/75.9 |
| R2 | 7030003520 | S.RES | ERJ3GEYJ 472 V (4.7 K) | B | 16.6/67.7 |
| R3 | 7030003580 | S.RES | ERJ3GEYJ 153 V (15 K) | B | 13.8/47.4 |
| R4 | 7030003540 | S.RES | ERJ3GEYJ 682 V (6.8 K) | B | 16.3/79.3 |
| R5 | 7030003480 | S.RES | ERJ3GEYJ 222 V (2.2 K) | B | 31.5/67.4 |
| R6 | 7030003520 | S.RES | ERJ3GEYJ 472 V (4.7 K) | B | 30.7/65.6 |
| R7 | 7030003580 | S.RES | ERJ3GEYJ 153 V (15 K) | B | 32.3/49.9 |
| R8 | 7030003540 | S.RES | ERJ3GEYJ 682 V (6.8 K) | B | 30.3/78.3 |
| R9 | 7030003480 | S.RES | ERJ3GEYJ 222 V (2.2 K) | B | 49.8/70.1 |
| R10 | 7030003520 | S.RES | ERJ3GEYJ 472 V (4.7 K) | B | 49.8/62.2 |
| R11 | 7030003580 | S.RES | ERJ3GEYJ 153 V (15 K) | B | 47.6/52.6 |
| R12 | 7030003540 | S.RES | ERJ3GEYJ 682 V (6.8 K) | B | 49.8/78.4 |
| R51 | 7030003390 | S.RES | ERJ3GEYJ 391 V (390) | B | 8/78 |
| R52 | 7030003390 | S.RES | ERJ3GEYJ 391 V (390) | B | 8/75.3 |
| R53 | 7030003390 | S.RES | ERJ3GEYJ 391 V (390) | B | 8/70.9 |
| R54 | 7030003390 | S.RES | ERJ3GEYJ 391 V (390) | B | 8/72.9 |
| R55 | 7030003390 | S.RES | ERJ3GEYJ 391 V (390) | B | 10.7/58.2 |
| R56 | 7030003390 | S.RES | ERJ3GEYJ 391 V (390) | B | 12/58.2 |
| R57 | 7030003390 | S.RES | ERJ3GEYJ 391 V (390) | B | 8/49.5 |
| R58 | 7030003390 | S.RES | ERJ3GEYJ 391 V (390) | B | 8/46.8 |
| R59 | 7030003390 | S.RES | ERJ3GEYJ 391 V (390) | B | 19.1/78 |
| R60 | 7030003390 | S.RES | ERJ3GEYJ 391 V (390) | B | 19.1/75.3 |
| R61 | 7030003390 | S.RES | ERJ3GEYJ 391 V (390) | B | 25.5/64.5 |
| R62 | 7030003390 | S.RES | ERJ3GEYJ 391 V (390) | B | 25.5/65.8 |
| R63 | 7030003390 | S.RES | ERJ3GEYJ 391 V (390) | B | 25.5/51.7 |
| R64 | 7030003390 | S.RES | ERJ3GEYJ 391 V (390) | B | 25.5/53 |
| R65 | 7030003390 | S.RES | ERJ3GEYJ 391 V (390) | B | 25.5/49.5 |
| R66 | 7030003390 | S.RES | ERJ3GEYJ 391 V (390) | B | 25.5/47 |
| R67 | 7030003390 | S.RES | ERJ3GEYJ 391 V (390) | B | 43/78 |
| R68 | 7030003390 | S.RES | ERJ3GEYJ 391 V (390) | B | 43/75.3 |
| R69 | 7030003390 | S.RES | ERJ3GEYJ 391 V (390) | B | 43.8/68.5 |
| R70 | 7030003390 | S.RES | ERJ3GEYJ 391 V (390) | B | 43.8/67.2 |
| R71 | 7030003390 | S.RES | ERJ3GEYJ 391 V (390) | B | 43/59 |
| R72 | 7030003390 | S.RES | ERJ3GEYJ 391 V (390) | B | 43/56.3 |
| R73 | 7030003390 | S.RES | ERJ3GEYJ 391 V (390) | B | 44.4/51.3 |
| R74 | 7030003390 | S.RES | ERJ3GEYJ 391 V (390) | B | 44.4/52.6 |
| R75 | 7030003460 | S.RES | ERJ3GEYJ 152 V (1.5 K) | B | 29.7/21 |
| R76 | 7030003460 | S.RES | ERJ3GEYJ 152 V (1.5 K) | B | 44.3/18.1 |
| C1 | 4030011600 | S.CER | C1608 JB 1E 104K-T | B | 8.5/66.9 |
| C2 | 4030011600 | S.CER | C1608 JB 1E 104K-T | B | 5.4/69.3 |
| C3 | 4030011600 | S.CER | C1608 JB 1E 104K-T | B | 11/67.4 |
| C4 | 4030011600 | S.CER | C1608 JB 1E 104K-T | B | 35.9/71.5 |
| C5 | 4030011600 | S.CER | C1608 JB 1E 104K-T | B | 31.7/35.9 |
| J1 | 6510021721 | S.CNR | 30FLT-SM2-TB (LF) (SN) | B | 5.2/60 |
| J2 | 6510021721 | S.CNR | 30FLT-SM2-TB (LF) (SN) | B | 5.2/31.6 |
| J3 | 6510021721 | S.CNR | 30FLT-SM2-TB (LF) (SN) | B | 49.9/33 |
| J4 | 6510019971 | S.CNR | 52808-1071 | B | 53.9/57 |
| J5 | 6510019971 | S.CNR | 52808-1071 | B | 24.5/74.7 |
| J6 | 6510003401 | CNR | B04B-EH-S (LF) (SN) | | |
| J7 | 6510018971 | S.CNR | B4B-PH-SM4-TB (LF) (SN) | B | 36.5/3 |
| DS1 | 5040002980 | S.LED | SML-512DW-T86 | T | 29.5/19 |
| DS2 | 5040002980 | S.LED | SML-512DW-T86 | T | 45.5/19 |
| S1 | 2260002740 | S.SW | LS8J2M-T | T | 9.5/34 |
| S2 | 2260002740 | S.SW | LS8J2M-T | T | 9.5/26 |
| S3 | 2260002740 | S.SW | LS8J2M-T | T | 29.5/34 |
| S4 | 2260002740 | S.SW | LS8J2M-T | T | 29.5/26 |
| S5 | 2260002740 | S.SW | LS8J2M-T | T | 45.5/34 |
| S6 | 2260002740 | S.SW | LS8J2M-T | T | 45.5/26 |
| S7 | 2260002740 | S.SW | LS8J2M-T | T | 9.5/12.7 |
| S8 | 2260002740 | S.SW | LS8J2M-T | T | 29.5/16 |
| S9 | 2260002740 | S.SW | LS8J2M-T | T | 29.5/7.5 |
| S11 | 2260002820 | S.SW | LS9J2M-2D/D-T | T | 10.5/76.2 |
| S12 | 2260002820 | S.SW | LS9J2M-2D/D-T | T | 10.5/66.7 |
| S13 | 2260002820 | S.SW | LS9J2M-2D/D-T | T | 10.5/57.2 |
| S14 | 2260002820 | S.SW | LS9J2M-2D/D-T | T | 10.5/47.7 |
| S15 | 2260002820 | S.SW | LS9J2M-2D/D-T | T | 28/76.2 |
| S16 | 2260002820 | S.SW | LS9J2M-2D/D-T | T | 28/66.7 |
| S17 | 2260002820 | S.SW | LS9J2M-2D/D-T | T | 28/57.2 |
| S18 | 2260002820 | S.SW | LS9J2M-2D/D-T | T | 28/47.7 |
| S19 | 2260002820 | S.SW | LS9J2M-2D/D-T | T | 45.5/76.2 |
| S20 | 2260002820 | S.SW | LS9J2M-2D/D-T | T | 45.5/66.7 |
| S21 | 2260002820 | S.SW | LS9J2M-2D/D-T | T | 45.5/57.2 |
| S22 | 2260002820 | S.SW | LS9J2M-2D/D-T | T | 45.5/47.7 |
| S23 | 2260002740 | S.SW | LS8J2M-T | T | 45.5/16 |
| S24 | 2260002740 | S.SW | LS8J2M-T | T | 45.5/7.5 |

## [PBT1 UNIT]

| REF NO. | PARTS NO. | DESCRIPTION | | M. | H/V LOCATION |
|---|---|---|---|---|---|
| R1 | 7210003180 | VAR | RV-319 (RK0972210) | | |
| R2 | 7030003520 | S.RES | ERJ3GEYJ 472 V (4.7 K) | T | 13.5/6.5 |
| R3 | 7030003520 | S.RES | ERJ3GEYJ 472 V (4.7 K) | T | 13.5/10 |
| C1 | 4030006880 | S.CER | C1608 JB 1H 472K-T | T | 15.6/10 |
| C2 | 4030006880 | S.CER | C1608 JB 1H 472K-T | T | 15.6/6.5 |
| J1 | 6510019971 | S.CNR | 52808-1071 | T | 24.5/7 |
| S1 | 2250000410 | ECR | TP90D96E20-30F-2178-1 | | |

M.=Mounted side (T: Mounted on the Top side, B: Mounted on the Bottom side)
S.=Surface mount

## [PBT2 UNIT]

| REF NO. | PARTS NO. | DESCRIPTION | M. | H/V LOCATION |
|---|---|---|---|---|
| R1 | 7210003180 | VAR RV-319 (RK0972210) | | |
| R2 | 7210003170 | VAR RV-318 (RK09L1120CON) | | |
| R3 | 7030003520 | S.RES ERJ3GEYJ 472 V (4.7 K) | T | 47.4/8.5 |
| R4 | 7030003520 | S.RES ERJ3GEYJ 472 V (4.7 K) | T | 47.4/9.8 |
| R5 | 7030003520 | S.RES ERJ3GEYJ 472 V (4.7 K) | T | 16.2/12.3 |
| C1 | 4030006880 | S.CER C1608 JB 1H 472K-T | T | 52.5/10.2 |
| C2 | 4030006880 | S.CER C1608 JB 1H 472K-T | T | 50.6/10.2 |
| C3 | 4030006880 | S.CER C1608 JB 1H 472K-T | T | 16.2/11 |
| J1 | 6510019971 | S.CNR 52808-1071 | T | 59.1/5.1 |
| S1 | 2250000410 | ECR TP90D96E20-30F-2178-1 | | |

## [LED UNIT]

| REF NO. | PARTS NO. | DESCRIPTION | M. | H/V LOCATION |
|---|---|---|---|---|
| R1 | 7030003470 | S.RES ERJ3GEYJ 182 V (1.8 K) | T | 9.1/14.9 |
| R2 | 7030003420 | S.RES ERJ3GEYJ 681 V (680) | T | 21/14.9 |
| R3 | 7030003440 | S.RES ERJ3GEYJ 102 V (1 K) | T | 32.1/14.9 |
| R4 | 7030003400 | S.RES ERJ3GEYJ 471 V (470) | T | 80.2/14.9 |
| R5 | 7030003470 | S.RES ERJ3GEYJ 182 V (1.8 K) | T | 126/14.9 |
| R6 | 7030003420 | S.RES ERJ3GEYJ 681 V (680) | T | 139/14.9 |
| R7 | 7030003440 | S.RES ERJ3GEYJ 102 V (1 K) | T | 149.8/14.9 |
| J1 | 6510020711 | S.CNR 52793-1070 (1090) | T | 111.3/2.6 |
| DS1 | 5040003000 | S.LED SML-A12UT-T86 | T | 5.6/15.9 |
| DS2 | 5040002961 | S.LED SML-A12MT T86J | T | 17.6/15.9 |
| DS3 | 5040003010 | S.LED SML-A12WT | T | 29.6/15.9 |
| DS4 | 5040002970 | S.LED CL-270WB-D-TS | T | 76.6/15.9 |
| DS5 | 5040003000 | S.LED SML-A12UT-T86 | T | 123.6/15.9 |
| DS6 | 5040002961 | S.LED SML-A12MT T86J | T | 135.6/15.9 |
| DS7 | 5040003010 | S.LED SML-A12WT | T | 147.6/15.9 |

M.=Mounted side (T: Mounted on the Top side, B: Mounted on the Bottom side)
S.=Surface mount

## [CF UNIT]

| REF NO. | PARTS NO. | DESCRIPTION | M. | H/V LOCATION |
|---|---|---|---|---|
| R1 | 7030003470 | S.RES ERJ3GEYJ 182 V (1.8 K) | T | 8.8/8.7 |
| J1 | 6510024151 | S.CNR 50FY-BMT-TB (LF) (SN) | T | 34.5/4.4 |
| J2 | 6510025670 | S.CNR 31-5620-050-719-871 | T | 34.5/13.6 |
| J3 | 6510021601 | S.CNR S2B-PH-SM4-TB (LF) (SN) | T | 13.7/3.7 |
| DS1 | 5040002990 | S.LED SML-512UWT86 | T | 61.2/40.5 |
| EP2 | 6910015640 | E.OTH 30-5610-000-002-000 | | |

## [DISPLAY UNIT]

| REF NO. | PARTS NO. | DESCRIPTION | M. | H/V LOCATION |
|---|---|---|---|---|
| IC1 | 1130011880 | S.IC CD4051BPWR | T | 121.9/76.4 |
| IC2 | 1130011880 | S.IC CD4051BPWR | T | 110.5/10.9 |
| IC3 | 1130011880 | S.IC CD4051BPWR | T | 76.7/20 |
| IC4 | 1130011880 | S.IC CD4051BPWR | T | 24/61.2 |
| IC5 | 1130011880 | S.IC CD4051BPWR | T | 106.8/77.4 |
| IC6 | 1140015180 | S.IC M30622M6P-535GP(SX-3009B-1) | T | 48.1/27.7 |
| IC7 | 1130011510 | S.IC BU2099FV-E2 | T | 124/59.8 |
| IC201 | 1130009301 | S.IC TC7SET08FU (T5L,JF) | T | 71.1/51.8 |
| IC202 | 1130009301 | S.IC TC7SET08FU (T5L,JF) | T | 107.2/58.5 |
| IC601 | 1130011551 | S.IC RX-4581NB-F | T | 39/45.9 |
| IC651 | 1110005821 | S.IC R3112N281A-TR-F | T | 47.9/91.1 |
| Q200 | 1590000430 | S.TR DTC144EUA T106 | T | 40.8/89.7 |
| Q201 | 1530003301 | S.TR 2SC3647S-TD-E | T | 91.1/47.1 |
| Q202 | 1530003301 | S.TR 2SC3647S-TD-E | T | 91.1/26.5 |
| Q203 | 1530002060 | S.TR 2SC4081 T106 R | T | 73.9/61.5 |
| Q204 | 1520000651 | S.TR 2SB1201S-TL-E | T | 79.5/65.1 |
| Q205 | 1590000680 | S.TR DTC114EUA T106 | T | 70.8/57.1 |
| Q206 | 1590000680 | S.TR DTC114EUA T106 | T | 113/19.4 |
| Q208 | 1590001330 | S.TR DTA114EUA T106 | T | 120/68.5 |
| Q209 | 1520000651 | S.TR 2SB1201S-TL-E | T | 113.9/59.9 |
| Q210 | 1530002060 | S.TR 2SC4081 T106 R | T | 107.3/55.3 |
| Q211 | 1590001330 | S.TR DTA114EUA T106 | T | 122.5/65.4 |
| Q212 | 1590000680 | S.TR DTC114EUA T106 | T | 72.5/54.3 |
| Q501 | 1590000680 | S.TR DTC114EUA T106 | T | 86/88.8 |
| Q502 | 1590000680 | S.TR DTC114EUA T106 | T | 86/92.5 |
| Q503 | 1590000680 | S.TR DTC114EUA T106 | T | 82.8/90.8 |
| Q504 | 1590001330 | S.TR DTA114EUA T106 | T | 89.2/88.8 |
| Q505 | 1590000680 | S.TR DTC114EUA T106 | T | 125/66.6 |
| Q601 | 1510000501 | S.TR 2SA1162-GR (TE85R,F) | T | 41.4/85.2 |
| D7 | 1750000520 | S.DIO DAN222TL | T | 122.4/18.7 |
| D8 | 1160000140 | S.DIO DAP222 TL | T | 122.4/15.3 |
| D9 | 1730002340 | S.ZEN MA8047-M (TX) | T | 74.3/59.3 |
| D10 | 1730002590 | S.ZEN MA8033-H (TX) | T | 109.5/56.9 |
| D11 | 1790001670 | S.DIO RB706F-40T106 | T | 121.3/10.6 |
| D12 | 1790001670 | S.DIO RB706F-40T106 | T | 60/31 |
| D601 | 1790001250 | S.DIO MA2S1110G-(TX) | T | 42.2/82.8 |
| D602 | 1790001250 | S.DIO MA2S1110G-(TX) | T | 39/85.9 |
| D603 | 1790001250 | S.DIO MA2S1110G-(TX) | T | 39/83.4 |
| X1 | 6050009870 | S.XTL CR-567 (9.8304 MHz) | T | 49.7/44.5 |
| L201 | 6200001831 | S.COL NLV32T-100J | T | 112/85.8 |
| L203 | 6200003950 | S.COL HF50ACC 322513-T | T | 115.2/85.6 |
| L204 | 6200001831 | S.COL NLV32T-100J | T | 126.9/91.6 |
| L205 | 6200003950 | S.COL HF50ACC 322513-T | T | 61.2/36.6 |
| L207 | 6200003950 | S.COL HF50ACC 322513-T | T | 117.4/17.1 |
| L208 | 6200003950 | S.COL HF50ACC 322513-T | T | 118.4/85.6 |
| L209 | 6200003950 | S.COL HF50ACC 322513-T | T | 9.9/64 |
| L210 | 6190001191 | S.COL D10F-#A814AY-101K | T | 86.6/79.7 |
| L211 | 6190001191 | S.COL D10F-#A814AY-101K | T | 81.2/38.2 |
| L601 | 6200001831 | S.COL NLV32T-100J | T | 34.7/83.8 |
| R200 | 7030003440 | S.RES ERJ3GEYJ 102 V (1 K) | T | 73.1/51.7 |
| R201 | 7030003470 | S.RES ERJ3GEYJ 182 V (1.8 K) | T | 96.6/43.6 |
| R202 | 7030003470 | S.RES ERJ3GEYJ 182 V (1.8 K) | T | 96.6/32.9 |
| R203 | 7030003800 | S.RES ERJ3GEYJ 105 V (1 M) | T | 49.7/41.2 |
| R208 | 7030003360 | S.RES ERJ3GEYJ 221 V (220) | T | 75/57 |
| R209 | 7030003860 | S.RES ERJ3GE JPW V | T | 14.6/25 |
| R210 | 7030003860 | S.RES ERJ3GE JPW V | T | 22/24.4 |
| R212 | 7030003660 | S.RES ERJ3GEYJ 683 V (68 K) | T | 67.8/57.6 |
| R213 | 7030003580 | S.RES ERJ3GEYJ 153 V (15 K) | T | 70.3/54.7 |
| R214 | 7030003440 | S.RES ERJ3GEYJ 102 V (1 K) | T | 40.7/13.4 |
| R215 | 7030003440 | S.RES ERJ3GEYJ 102 V (1 K) | T | 39.4/13.4 |
| R216 | 7030003440 | S.RES ERJ3GEYJ 102 V (1 K) | T | 38.1/13.4 |
| R217 | 7030003440 | S.RES ERJ3GEYJ 102 V (1 K) | T | 36.8/13.4 |
| R218 | 7030003440 | S.RES ERJ3GEYJ 102 V (1 K) | T | 35.5/13.4 |
| R219 | 7030003440 | S.RES ERJ3GEYJ 102 V (1 K) | T | 34.2/13.4 |
| R220 | 7030003440 | S.RES ERJ3GEYJ 102 V (1 K) | T | 31.6/13.6 |
| R221 | 7030003440 | S.RES ERJ3GEYJ 102 V (1 K) | T | 32.9/13.4 |
| R222 | 7030003440 | S.RES ERJ3GEYJ 102 V (1 K) | T | 30.6/16.1 |
| R223 | 7030003440 | S.RES ERJ3GEYJ 102 V (1 K) | T | 29.8/13.5 |
| R224 | 7030003440 | S.RES ERJ3GEYJ 102 V (1 K) | T | 29.1/16.1 |
| R225 | 7030003440 | S.RES ERJ3GEYJ 102 V (1 K) | T | 28.3/13.4 |
| R226 | 7030003440 | S.RES ERJ3GEYJ 102 V (1 K) | T | 27.6/16.1 |
| R227 | 7030003440 | S.RES ERJ3GEYJ 102 V (1 K) | T | 26.8/13.4 |
| R228 | 7030003440 | S.RES ERJ3GEYJ 102 V (1 K) | T | 25.5/13.4 |
| R229 | 7030003440 | S.RES ERJ3GEYJ 102 V (1 K) | T | 22.9/13.4 |
| R230 | 7030003440 | S.RES ERJ3GEYJ 102 V (1 K) | T | 24.2/13.4 |
| R232 | 7030003440 | S.RES ERJ3GEYJ 102 V (1 K) | T | 74.1/13.4 |
| R233 | 7030003440 | S.RES ERJ3GEYJ 102 V (1 K) | T | 76.9/13.4 |
| R234 | 7030003440 | S.RES ERJ3GEYJ 102 V (1 K) | T | 75.4/13.4 |
| R235 | 7030003440 | S.RES ERJ3GEYJ 102 V (1 K) | T | 78.2/13.4 |
| R236 | 7030003440 | S.RES ERJ3GEYJ 102 V (1 K) | T | 79.5/13.4 |
| R237 | 7030003440 | S.RES ERJ3GEYJ 102 V (1 K) | T | 80.8/13.4 |
| R238 | 7030003440 | S.RES ERJ3GEYJ 102 V (1 K) | T | 82.1/13.4 |
| R239 | 7030003440 | S.RES ERJ3GEYJ 102 V (1 K) | T | 107.3/86.7 |
| R240 | 7030003440 | S.RES ERJ3GEYJ 102 V (1 K) | T | 105.9/86.7 |
| R241 | 7030003680 | S.RES ERJ3GEYJ 104 V (100 K) | T | 108.6/86.6 |
| R242 | 7030003680 | S.RES ERJ3GEYJ 104 V (100 K) | T | 104.5/86.7 |
| R246 | 7030003440 | S.RES ERJ3GEYJ 102 V (1 K) | T | 59.5/13.3 |
| R247 | 7030003440 | S.RES ERJ3GEYJ 102 V (1 K) | T | 58.2/13.3 |
| R248 | 7030003440 | S.RES ERJ3GEYJ 102 V (1 K) | T | 56.9/13.3 |
| R249 | 7030003440 | S.RES ERJ3GEYJ 102 V (1 K) | T | 55.6/13.3 |
| R250 | 7030003440 | S.RES ERJ3GEYJ 102 V (1 K) | T | 54.3/13.3 |
| R251 | 7030003320 | S.RES ERJ3GEYJ 101 V (100) | T | 52.8/13.3 |
| R252 | 7030003440 | S.RES ERJ3GEYJ 102 V (1 K) | T | 51.5/13.3 |
| R253 | 7030003440 | S.RES ERJ3GEYJ 102 V (1 K) | T | 50.2/13.3 |
| R254 | 7030003680 | S.RES ERJ3GEYJ 104 V (100 K) | T | 48.4/13.3 |
| R255 | 7030003640 | S.RES ERJ3GEYJ 473 V (47 K) | T | 12.6/14.1 |

M.=Mounted side (T: Mounted on the Top side, B: Mounted on the Bottom side)
S.=Surface mount

## [DISPLAY UNIT]

| REF NO. | PARTS NO. | DESCRIPTION | M. | H/V LOCATION |
|---|---|---|---|---|
| R256 | 7030003640 | S.RES ERJ3GEYJ 473 V (47 K) | T | 16.5/14.1 |
| R257 | 7030003670 | S.RES ERJ3GEYJ 823 V (82 K) | T | 13.9/14.1 |
| R258 | 7030003670 | S.RES ERJ3GEYJ 823 V (82 K) | T | 15.2/14.1 |
| R259 | 7030003440 | S.RES ERJ3GEYJ 102 V (1 K) | T | 12.8/90.1 |
| R260 | 7030003440 | S.RES ERJ3GEYJ 102 V (1 K) | T | 19.4/87.2 |
| R261 | 7030003440 | S.RES ERJ3GEYJ 102 V (1 K) | T | 10.1/88.5 |
| R262 | 7030003440 | S.RES ERJ3GEYJ 102 V (1 K) | T | 7.1/79.8 |
| R263 | 7030003440 | S.RES ERJ3GEYJ 102 V (1 K) | T | 18/81.9 |
| R264 | 7030003440 | S.RES ERJ3GEYJ 102 V (1 K) | T | 7.1/78.5 |
| R265 | 7030003440 | S.RES ERJ3GEYJ 102 V (1 K) | T | 18/80.6 |
| R266 | 7030003440 | S.RES ERJ3GEYJ 102 V (1 K) | T | 7.1/77.2 |
| R267 | 7030003440 | S.RES ERJ3GEYJ 102 V (1 K) | T | 18/79.3 |
| R268 | 7030003440 | S.RES ERJ3GEYJ 102 V (1 K) | T | 7.1/75.9 |
| R269 | 7030003440 | S.RES ERJ3GEYJ 102 V (1 K) | T | 18/78 |
| R270 | 7030003440 | S.RES ERJ3GEYJ 102 V (1 K) | T | 7.1/74.6 |
| R271 | 7030003440 | S.RES ERJ3GEYJ 102 V (1 K) | T | 18/76.7 |
| R272 | 7030003440 | S.RES ERJ3GEYJ 102 V (1 K) | T | 7.1/73.3 |
| R273 | 7030003440 | S.RES ERJ3GEYJ 102 V (1 K) | T | 7.1/72 |
| R274 | 7030003440 | S.RES ERJ3GEYJ 102 V (1 K) | T | 18/75.4 |
| R275 | 7030003440 | S.RES ERJ3GEYJ 102 V (1 K) | T | 7.1/70.7 |
| R276 | 7030003440 | S.RES ERJ3GEYJ 102 V (1 K) | T | 18/74.1 |
| R278 | 7030003440 | S.RES ERJ3GEYJ 102 V (1 K) | T | 13.4/42.7 |
| R279 | 7030003440 | S.RES ERJ3GEYJ 102 V (1 K) | T | 4/43.9 |
| R280 | 7030003440 | S.RES ERJ3GEYJ 102 V (1 K) | T | 13.4/44 |
| R281 | 7030003440 | S.RES ERJ3GEYJ 102 V (1 K) | T | 4/45.2 |
| R282 | 7030003440 | S.RES ERJ3GEYJ 102 V (1 K) | T | 13.4/45.3 |
| R283 | 7030003440 | S.RES ERJ3GEYJ 102 V (1 K) | T | 4/46.5 |
| R284 | 7030003520 | S.RES ERJ3GEYJ 472 V (4.7 K) | T | 13.4/46.6 |
| R285 | 7030003440 | S.RES ERJ3GEYJ 102 V (1 K) | T | 4/47.8 |
| R286 | 7030003440 | S.RES ERJ3GEYJ 102 V (1 K) | T | 13.4/47.9 |
| R287 | 7030003440 | S.RES ERJ3GEYJ 102 V (1 K) | T | 4/49.1 |
| R288 | 7030003440 | S.RES ERJ3GEYJ 102 V (1 K) | T | 13.4/49.2 |
| R289 | 7030003440 | S.RES ERJ3GEYJ 102 V (1 K) | T | 13.4/50.5 |
| R290 | 7030003440 | S.RES ERJ3GEYJ 102 V (1 K) | T | 4/51.7 |
| R291 | 7030003440 | S.RES ERJ3GEYJ 102 V (1 K) | T | 13.4/51.8 |
| R292 | 7030003440 | S.RES ERJ3GEYJ 102 V (1 K) | T | 4/53 |
| R293 | 7030003440 | S.RES ERJ3GEYJ 102 V (1 K) | T | 13.4/54.4 |
| R294 | 7030003440 | S.RES ERJ3GEYJ 102 V (1 K) | T | 4/55.6 |
| R295 | 7030003440 | S.RES ERJ3GEYJ 102 V (1 K) | T | 4/58.2 |
| R296 | 7030003440 | S.RES ERJ3GEYJ 102 V (1 K) | T | 13.4/58.3 |
| R297 | 7030003440 | S.RES ERJ3GEYJ 102 V (1 K) | T | 4/60.8 |
| R298 | 7030003440 | S.RES ERJ3GEYJ 102 V (1 K) | T | 13.4/59.6 |
| R299 | 7030003440 | S.RES ERJ3GEYJ 102 V (1 K) | T | 4/50.4 |
| R300 | 7030003440 | S.RES ERJ3GEYJ 102 V (1 K) | T | 4/63.4 |
| R301 | 7030003440 | S.RES ERJ3GEYJ 102 V (1 K) | T | 13.4/62.2 |
| R302 | 7030003560 | S.RES ERJ3GEYJ 103 V (10 K) | T | 13.4/60.9 |
| R303 | 7030003560 | S.RES ERJ3GEYJ 103 V (10 K) | T | 4/62.1 |
| R304 | 7030003560 | S.RES ERJ3GEYJ 103 V (10 K) | T | 13.4/57 |
| R305 | 7030003560 | S.RES ERJ3GEYJ 103 V (10 K) | T | 4/59.5 |
| R306 | 7030003560 | S.RES ERJ3GEYJ 103 V (10 K) | T | 4/56.9 |
| R307 | 7030003560 | S.RES ERJ3GEYJ 103 V (10 K) | T | 13.4/55.7 |
| R308 | 7030003560 | S.RES ERJ3GEYJ 103 V (10 K) | T | 4/54.3 |
| R309 | 7030003560 | S.RES ERJ3GEYJ 103 V (10 K) | T | 13.4/53.1 |
| R310 | 7030003440 | S.RES ERJ3GEYJ 102 V (1 K) | T | 24.2/32 |
| R311 | 7030003440 | S.RES ERJ3GEYJ 102 V (1 K) | T | 22.9/32 |
| R312 | 7030003440 | S.RES ERJ3GEYJ 102 V (1 K) | T | 104.9/9.4 |
| R313 | 7030003440 | S.RES ERJ3GEYJ 102 V (1 K) | T | 104.9/10.7 |
| R314 | 7030003440 | S.RES ERJ3GEYJ 102 V (1 K) | T | 104.1/12.2 |
| R315 | 7030003440 | S.RES ERJ3GEYJ 102 V (1 K) | T | 104.9/6.8 |
| R316 | 7030003440 | S.RES ERJ3GEYJ 102 V (1 K) | T | 116.1/13.7 |
| R317 | 7030003440 | S.RES ERJ3GEYJ 102 V (1 K) | T | 116.7/8.3 |
| R318 | 7030003440 | S.RES ERJ3GEYJ 102 V (1 K) | T | 116.1/11.7 |
| R319 | 7030003440 | S.RES ERJ3GEYJ 102 V (1 K) | T | 116.6/9.6 |
| R320 | 7030003440 | S.RES ERJ3GEYJ 102 V (1 K) | T | 135.2/23.4 |
| R321 | 7030003440 | S.RES ERJ3GEYJ 102 V (1 K) | T | 127.7/20.8 |
| R322 | 7030003440 | S.RES ERJ3GEYJ 102 V (1 K) | T | 126.4/20.8 |
| R323 | 7030003560 | S.RES ERJ3GEYJ 103 V (10 K) | T | 114.9/18.7 |
| R325 | 7030003380 | S.RES ERJ3GEYJ 331 V (330) | T | 106.9/69.6 |
| R326 | 7030003360 | S.RES ERJ3GEYJ 221 V (220) | T | 109.8/54.4 |
| R327 | 7030003580 | S.RES ERJ3GEYJ 153 V (15 K) | T | 105.4/55.1 |
| R328 | 7030003660 | S.RES ERJ3GEYJ 683 V (68 K) | T | 105.1/61.2 |
| R329 | 7030003560 | S.RES ERJ3GEYJ 103 V (10 K) | T | 38/33.3 |
| R330 | 7030003480 | S.RES ERJ3GEYJ 222 V (2.2 K) | T | 128.8/54.1 |
| R331 | 7030003640 | S.RES ERJ3GEYJ 473 V (47 K) | T | 18/84.5 |
| R332 | 7030003640 | S.RES ERJ3GEYJ 473 V (47 K) | T | 9.1/84.8 |
| R333 | 7030003640 | S.RES ERJ3GEYJ 473 V (47 K) | T | 18/83.2 |
| R334 | 7030003640 | S.RES ERJ3GEYJ 473 V (47 K) | T | 9.1/83.5 |
| R335 | 7030003670 | S.RES ERJ3GEYJ 823 V (82 K) | T | 21.4/84.5 |
| R336 | 7030003670 | S.RES ERJ3GEYJ 823 V (82 K) | T | 8.4/86.9 |
| R337 | 7030003670 | S.RES ERJ3GEYJ 823 V (82 K) | T | 20.7/83.2 |
| R338 | 7030003670 | S.RES ERJ3GEYJ 823 V (82 K) | T | 8.1/81.1 |
| R339 | 7070000261 | RES ERG2SJ 220 (22) | | |
| R340 | 7070000261 | RES ERG2SJ 220 (22) | | |
| R342 | 7030003640 | S.RES ERJ3GEYJ 473 V (47 K) | T | 35.4/38.4 |
| R343 | 7030003640 | S.RES ERJ3GEYJ 473 V (47 K) | T | 105.1/57.7 |
| R351 | 7030003440 | S.RES ERJ3GEYJ 102 V (1 K) | T | 123.2/70.3 |
| R352 | 7030003440 | S.RES ERJ3GEYJ 102 V (1 K) | T | 101.2/80.6 |
| R353 | 7030003440 | S.RES ERJ3GEYJ 102 V (1 K) | T | 102.3/75 |
| R354 | 7030003440 | S.RES ERJ3GEYJ 102 V (1 K) | T | 100.2/78 |
| R355 | 7030003440 | S.RES ERJ3GEYJ 102 V (1 K) | T | 101/75.2 |
| R356 | 7030003440 | S.RES ERJ3GEYJ 102 V (1 K) | T | 128.4/78.7 |
| R357 | 7030003440 | S.RES ERJ3GEYJ 102 V (1 K) | T | 126.7/72.1 |
| R358 | 7030003440 | S.RES ERJ3GEYJ 102 V (1 K) | T | 114.8/75.7 |
| R359 | 7030003440 | S.RES ERJ3GEYJ 102 V (1 K) | T | 116.1/75.4 |
| R360 | 7030003440 | S.RES ERJ3GEYJ 102 V (1 K) | T | 130.1/77.2 |
| R361 | 7030003440 | S.RES ERJ3GEYJ 102 V (1 K) | T | 129.4/74 |
| R362 | 7030003440 | S.RES ERJ3GEYJ 102 V (1 K) | T | 116.4/79.3 |
| R363 | 7030003440 | S.RES ERJ3GEYJ 102 V (1 K) | T | 117.4/75.5 |
| R364 | 7030003640 | S.RES ERJ3GEYJ 473 V (47 K) | T | 61.2/29 |
| R365 | 7030004730 | S.RES ERJ3GEYF 222 V (2.2 K) | T | 61.9/33 |
| R366 | 7030003440 | S.RES ERJ3GEYJ 102 V (1 K) | T | 128.4/64.2 |
| R369 | 7030003860 | S.RES ERJ3GE JPW V | T | 55.7/37.4 |
| R501 | 7030003640 | S.RES ERJ3GEYJ 473 V (47 K) | T | 68.5/16.9 |
| R502 | 7030003640 | S.RES ERJ3GEYJ 473 V (47 K) | T | 67.2/16.9 |
| R503 | 7030003640 | S.RES ERJ3GEYJ 473 V (47 K) | T | 36.1/32.5 |

## [DISPLAY UNIT]

| REF NO. | PARTS NO. | DESCRIPTION | M. | H/V LOCATION |
|---|---|---|---|---|
| R504 | 7030003440 | S.RES ERJ3GEYJ 102 V (1 K) | T | 135.3/62.2 |
| R505 | 7030003360 | S.RES ERJ3GEYJ 221 V (220) | T | 89.2/86.9 |
| R601 | 7030003860 | S.RES ERJ3GE JPW V | T | 44.1/89.8 |
| R602 | 7030003520 | S.RES ERJ3GEYJ 472 V (4.7 K) | T | 41.6/87.6 |
| R603 | 7030003640 | S.RES ERJ3GEYJ 473 V (47 K) | T | 32.4/45.4 |
| R604 | 7030003560 | S.RES ERJ3GEYJ 103 V (10 K) | T | 32.4/46.9 |
| R651 | 7030003650 | S.RES ERJ3GEYJ 563 V (56 K) | T | 114.8/95 |
| R652 | 7030003620 | S.RES ERJ3GEYJ 333 V (33 K) | T | 118.6/95 |
| R653 | 7030003520 | S.RES ERJ3GEYJ 472 V (4.7 K) | T | 44.1/86.1 |
| C8 | 4030011600 | S.CER C1608 JB 1E 104K-T | T | 134.5/74.9 |
| C201 | 4310001170 | MLR ECQE1A 124JBB | | |
| C202 | 4030016880 | S.CER C4520 CH 3F 150KT-A | T | 125.1/37.2 |
| C203 | 4030007020 | S.CER C1608 CH 1H 120J-T | T | 50.5/39.9 |
| C204 | 4030007020 | S.CER C1608 CH 1H 120J-T | T | 47.9/40 |
| C205 | 4030011600 | S.CER C1608 JB 1E 104K-T | T | 27.7/64.4 |
| C206 | 4030011600 | S.CER C1608 JB 1E 104K-T | T | 109/80.8 |
| C207 | 4030011600 | S.CER C1608 JB 1E 104K-T | T | 73.2/22.2 |
| C208 | 4030011600 | S.CER C1608 JB 1E 104K-T | T | 109.5/6.1 |
| C209 | 4030011600 | S.CER C1608 JB 1E 104K-T | T | 124.1/79.9 |
| C210 | 4030011600 | S.CER C1608 JB 1E 104K-T | T | 67.8/56.3 |
| C211 | 4030011600 | S.CER C1608 JB 1E 104K-T | T | 107.7/61.2 |
| C212 | 4510008800 | S.ELE EEE1EA100SR | T | 68.8/61.3 |
| C213 | 4510009150 | S.ELE EEE1EA470WP | T | 77.8/52 |
| C214 | 4510008800 | S.ELE EEE1EA100SR | T | 72.2/67.1 |
| C215 | 4030011600 | S.CER C1608 JB 1E 104K-T | T | 120.9/85.8 |
| C216 | 4030011600 | S.CER C1608 JB 1E 104K-T | T | 58.7/5.2 |
| C217 | 4030011600 | S.CER C1608 JB 1E 104K-T | T | 108.3/83.3 |
| C218 | 4510009150 | S.ELE EEE1EA470WP | T | 99.6/84.8 |
| C219 | 4030006860 | S.CER C1608 JB 1H 102K-T | T | 109.8/83.3 |
| C220 | 4030011600 | S.CER C1608 JB 1E 104K-T | T | 126.2/88.8 |
| C221 | 4030011600 | S.CER C1608 JB 1E 104K-T | T | 103.2/55.1 |
| C222 | 4030011600 | S.CER C1608 JB 1E 104K-T | T | 127.7/15.4 |
| C223 | 4030011600 | S.CER C1608 JB 1E 104K-T | T | 134.7/27.7 |
| C224 | 4030011600 | S.CER C1608 JB 1E 104K-T | T | 48.1/38.2 |
| C225 | 4030011600 | S.CER C1608 JB 1E 104K-T | T | 119.8/61.5 |
| C226 | 4030011600 | S.CER C1608 JB 1E 104K-T | T | 17.2/87.2 |
| C227 | 4030011600 | S.CER C1608 JB 1E 104K-T | T | 120.9/82.9 |
| C228 | 4510008800 | S.ELE EEE1EA100SR | T | 125.5/83.6 |
| C229 | 4030011600 | S.CER C1608 JB 1E 104K-T | T | 7.3/65.1 |
| C230 | 4030006880 | S.CER C1608 JB 1H 472K-T | T | 58.6/29 |
| C231 | 4030011600 | S.CER C1608 JB 1E 104K-T | T | 47.6/17.4 |
| C232 | 4030011600 | S.CER C1608 JB 1E 104K-T | T | 58/31.2 |
| C241 | 4030011600 | S.CER C1608 JB 1E 104K-T | T | 118.9/80.3 |
| C242 | 4030011600 | S.CER C1608 JB 1E 104K-T | T | 116.4/81.2 |
| C243 | 4030011600 | S.CER C1608 JB 1E 104K-T | T | 120.2/80.3 |
| C244 | 4030011600 | S.CER C1608 JB 1E 104K-T | T | 121.1/73 |
| C245 | 4030011600 | S.CER C1608 JB 1E 104K-T | T | 128.4/80 |
| C246 | 4030011600 | S.CER C1608 JB 1E 104K-T | T | 131.3/74.6 |
| C247 | 4030011600 | S.CER C1608 JB 1E 104K-T | T | 130.1/75.9 |
| C248 | 4030011600 | S.CER C1608 JB 1E 104K-T | T | 124.8/73 |
| C249 | 4030011600 | S.CER C1608 JB 1E 104K-T | T | 112.1/6.1 |
| C250 | 4030011600 | S.CER C1608 JB 1E 104K-T | T | 113.5/14.3 |
| C251 | 4030011600 | S.CER C1608 JB 1E 104K-T | T | 112.1/7.4 |
| C252 | 4030011600 | S.CER C1608 JB 1E 104K-T | T | 115.9/6.9 |
| C253 | 4030011600 | S.CER C1608 JB 1E 104K-T | T | 104.1/13.5 |
| C254 | 4030011600 | S.CER C1608 JB 1E 104K-T | T | 109.5/7.4 |
| C255 | 4030011600 | S.CER C1608 JB 1E 104K-T | T | 104.9/8.1 |
| C256 | 4030011600 | S.CER C1608 JB 1E 104K-T | T | 104.9/5.5 |
| C257 | 4030011600 | S.CER C1608 JB 1E 104K-T | T | 72.8/13.4 |
| C258 | 4030011600 | S.CER C1608 JB 1E 104K-T | T | 72.7/16.2 |
| C259 | 4030011600 | S.CER C1608 JB 1E 104K-T | T | 80.2/19 |
| C260 | 4030011600 | S.CER C1608 JB 1E 104K-T | T | 72.4/19.4 |
| C261 | 4030011600 | S.CER C1608 JB 1E 104K-T | T | 76.4/28.1 |
| C262 | 4030011600 | S.CER C1608 JB 1E 104K-T | T | 75.1/28.1 |
| C263 | 4030011600 | S.CER C1608 JB 1E 104K-T | T | 73.3/27.3 |
| C264 | 4030011600 | S.CER C1608 JB 1E 104K-T | T | 72.5/25.5 |
| C265 | 4030011600 | S.CER C1608 JB 1E 104K-T | T | 20.9/52.3 |
| C266 | 4030011600 | S.CER C1608 JB 1E 104K-T | T | 28.4/62.5 |
| C267 | 4030011600 | S.CER C1608 JB 1E 104K-T | T | 21.6/55.8 |
| C268 | 4030011600 | S.CER C1608 JB 1E 104K-T | T | 21.6/57.1 |
| C601 | 4510008800 | S.ELE EEE1EA100SR | T | 29.4/86.2 |
| C602 | 4030011600 | S.CER C1608 JB 1E 104K-T | T | 39.2/41.8 |
| C651 | 4030008890 | S.CER C1608 JB 1H 273K-T | T | 47.9/93.5 |
| C652 | 4030011600 | S.CER C1608 JB 1E 104K-T | T | 50.3/91.9 |
| J1 | 6510021721 | S.CNR 30FLT-SM2-TB (LF) (SN) | T | 13.2/80.7 |
| J2 | 6510021721 | S.CNR 30FLT-SM2-TB (LF) (SN) | T | 8.7/52.4 |
| J3 | 6510022471 | S.CNR 40FLT-SM2-TB (LF) (SN) | T | 131.5/62.7 |
| J4 | 6510020531 | S.CNR 52808-1871 | T | 30.8/8.8 |
| J5 | 6510019971 | S.CNR 52808-1071 | T | 77.7/8.8 |
| J6 | 6510021721 | S.CNR 30FLT-SM2-TB (LF) (SN) | T | 130.9/21.4 |
| J7 | 6510019971 | S.CNR 52808-1071 | T | 55.4/8.8 |
| J201 | 6510022471 | S.CNR 40FLT-SM2-TB (LF) (SN) | T | 6.2/28.7 |
| J202 | 6510022471 | S.CNR 40FLT-SM2-TB (LF) (SN) | T | 18.1/28.7 |
| J203 | 6510020081 | S.CNR 52808-2071 (2090) | T | 113.5/91.2 |
| J205 | 6510003401 | CNR B04B-EH-S (LF) (SN) | | |
| J301 | 6510021181 | S.CNR SM2 (8.0) B-BHS1TB(LF)(SN) | T | 131.7/38.9 |
| J302 | 6510022191 | S.CNR B3B-PH-SM4-TB (LF) (SN) | T | 94.2/7.5 |
| J601 | 6510021861 | CNR BH-800.4GG <LTC> | | |
| T201 | 5910000981 | TSM 3319-T088-LF | | |
| BT601 | 3020000110 | LTM CR2032 | | |

M.=Mounted side (T: Mounted on the Top side, B: Mounted on the Bottom side)
S.=Surface mount

## [RXPLL-A UNIT]

| REF NO. | PARTS NO. | DESCRIPTION | | M. | H/V LOCATION |
|---|---|---|---|---|---|
| IC1 | 1130011530 | S.IC | CD74HC4094M96 | T | 11.9/24.1 |
| IC2 | 1130009691 | S.IC | TC74HCT7007AF(F) S | T | 22.8/23.3 |
| IC51 | 1180001252 | S.IC | TA7808F NQ | T | 77/16.7 |
| IC61 | 1180000421 | S.IC | TA78L05F(TE12R,F) | B | 56.5/16 |
| IC101 | 1140007881 | S.IC | TC190G08EFG0046JDZ/SC1246A | T | 31.3/89.7 |
| IC102 | 1130003831 | S.IC | TC7S04F(TE85R,F) [USA] | T | 33.1/74.7 |
| | 1130003831 | S.IC | TC7S04F(TE85R,F) [EUR] | | |
| | 1130003831 | S.IC | TC7S04F(TE85R,F) [FRA] | | |
| | 1130003831 | S.IC | TC7S04F(TE85R,F) [DEN] | | |
| | 1130003831 | S.IC | TC7S04F(TE85R,F) [ITR] | | |
| | 1130003831 | S.IC | TC7S04F(TE85R,F) [KOR] | | |
| | 1130003830 | S.IC | TC7S04F (TE85R) [ESP] | | |
| | 1130003830 | S.IC | TC7S04F (TE85R) [AUS] | | |
| | 1130003831 | S.IC | TC7S04F(TE85R,F) [UK] | | |
| | 1130003831 | S.IC | TC7S04F(TE85R,F) [RX] | | |
| | 1130003831 | S.IC | TC7S04F(TE85R,F) [CHN] | | |
| IC103 | 1130006441 | S.IC | TC7S08F(TE85R,F) [USA] | B | 34/92.1 |
| | 1130006441 | S.IC | TC7S08F(TE85R,F) [EUR] | | |
| | 1130006441 | S.IC | TC7S08F(TE85R,F) [FRA] | | |
| | 1130006441 | S.IC | TC7S08F(TE85R,F) [DEN] | | |
| | 1130006441 | S.IC | TC7S08F(TE85R,F) [ITR] | | |
| | 1130006441 | S.IC | TC7S08F(TE85R,F) [KOR] | | |
| | 1130006440 | S.IC | TC7S08F (TE85R) [ESP] | | |
| | 1130006440 | S.IC | TC7S08F (TE85R) [AUS] | | |
| | 1130006441 | S.IC | TC7S08F(TE85R,F) [UK] | | |
| | 1130006441 | S.IC | TC7S08F(TE85R,F) [RX] | | |
| | 1130006441 | S.IC | TC7S08F(TE85R,F) [CHN] | | |
| IC104 | 1130003831 | S.IC | TC7S04F(TE85R,F) [USA] | T | 31.7/101.1 |
| | 1130003831 | S.IC | TC7S04F(TE85R,F) [EUR] | | |
| | 1130003831 | S.IC | TC7S04F(TE85R,F) [FRA] | | |
| | 1130003831 | S.IC | TC7S04F(TE85R,F) [DEN] | | |
| | 1130003831 | S.IC | TC7S04F(TE85R,F) [ITR] | | |
| | 1130003831 | S.IC | TC7S04F(TE85R,F) [KOR] | | |
| | 1130003830 | S.IC | TC7S04F (TE85R) [ESP] | | |
| | 1130003830 | S.IC | TC7S04F (TE85R) [AUS] | | |
| | 1130003831 | S.IC | TC7S04F(TE85R,F) [UK] | | |
| | 1130003831 | S.IC | TC7S04F(TE85R,F) [RX] | | |
| | 1130003831 | S.IC | TC7S04F(TE85R,F) [CHN] | | |
| IC201 | 1130009230 | S.IC | LMX2306TMX/NOPB | T | 27.9/38.8 |
| IC501 | 1140007881 | S.IC | TC190G08EFG 0046JDZ/SC1246A | T | 31.3/142.5 |
| IC502 | 1130003831 | S.IC | TC7S04F(TE85R,F) [USA] | T | 24.8/127.4 |
| | 1130003831 | S.IC | TC7S04F(TE85R,F) [EUR] | | |
| | 1130003831 | S.IC | TC7S04F(TE85R,F) [FRA] | | |
| | 1130003831 | S.IC | TC7S04F(TE85R,F) [DEN] | | |
| | 1130003831 | S.IC | TC7S04F(TE85R,F) [ITR] | | |
| | 1130003831 | S.IC | TC7S04F(TE85R,F) [KOR] | | |
| | 1130003830 | S.IC | TC7S04F (TE85R) [ESP] | | |
| | 1130003830 | S.IC | TC7S04F (TE85R) [AUS] | | |
| | 1130003831 | S.IC | TC7S04F(TE85R,F) [UK] | | |
| | 1130003831 | S.IC | TC7S04F(TE85R,F) [RX] | | |
| | 1130003831 | S.IC | TC7S04F(TE85R,F) [CHN] | | |
| IC503 | 1130003831 | S.IC | TC7S04F(TE85R,F) [USA] | T | 31.7/154.1 |
| | 1130003831 | S.IC | TC7S04F(TE85R,F) [EUR] | | |
| | 1130003831 | S.IC | TC7S04F(TE85R,F) [FRA] | | |
| | 1130003831 | S.IC | TC7S04F(TE85R,F) [DEN] | | |
| | 1130003831 | S.IC | TC7S04F(TE85R,F) [ITR] | | |
| | 1130003831 | S.IC | TC7S04F(TE85R,F) [KOR] | | |
| | 1130003830 | S.IC | TC7S04F (TE85R) [ESP] | | |
| | 1130003830 | S.IC | TC7S04F (TE85R) [AUS] | | |
| | 1130003831 | S.IC | TC7S04F(TE85R,F) [UK] | | |
| | 1130003831 | S.IC | TC7S04F(TE85R,F) [RX] | | |
| | 1130003831 | S.IC | TC7S04F(TE85R,F) [CHN] | | |
| IC602 | 1130006441 | S.IC | TC7S08F(TE85R,F) [USA] | B | 50.6/113.3 |
| | 1130006441 | S.IC | TC7S08F(TE85R,F) [EUR] | | |
| | 1130006441 | S.IC | TC7S08F(TE85R,F) [FRA] | | |
| | 1130006441 | S.IC | TC7S08F(TE85R,F) [DEN] | | |
| | 1130006441 | S.IC | TC7S08F(TE85R,F) [ITR] | | |
| | 1130006441 | S.IC | TC7S08F(TE85R,F) [KOR] | | |
| | 1130006440 | S.IC | TC7S08F (TE85R) [ESP] | | |
| | 1130006440 | S.IC | TC7S08F (TE85R) [AUS] | | |
| | 1130006441 | S.IC | TC7S08F(TE85R,F) [UK] | | |
| | 1130006441 | S.IC | TC7S08F(TE85R,F) [RX] | | |
| | 1130006441 | S.IC | TC7S08F(TE85R,F) [CHN] | | |
| IC651 | 1140004550 | S.IC | M65343FP/SC1287 | T | 22.6/169.2 |
| IC652 | 1130003831 | S.IC | TC7S04F(TE85R,F) [USA] | T | 13.7/163.7 |
| | 1130003831 | S.IC | TC7S04F(TE85R,F) [EUR] | | |
| | 1130003831 | S.IC | TC7S04F(TE85R,F) [FRA] | | |
| | 1130003831 | S.IC | TC7S04F(TE85R,F) [DEN] | | |
| | 1130003831 | S.IC | TC7S04F(TE85R,F) [ITR] | | |
| | 1130003831 | S.IC | TC7S04F(TE85R,F) [KOR] | | |
| | 1130003830 | S.IC | TC7S04F (TE85R) [ESP] | | |
| | 1130003830 | S.IC | TC7S04F (TE85R) [AUS] | | |
| | 1130003831 | S.IC | TC7S04F(TE85R,F) [UK] | | |
| | 1130003831 | S.IC | TC7S04F(TE85R,F) [RX] | | |
| | 1130003831 | S.IC | TC7S04F(TE85R,F) [CHN] | | |
| IC1051 | 1190002010 | S.IC | SD5400CY <TOMO> | T | 176.9/99.9 |
| IC1081 | 1110006180 | S.IC | UPG2009TB-E3 | B | 151.6/85.1 |
| IC1402 | 1190002110 | S.IC | NJG1519KC1-TE3-#ZZZB | T | 117.3/69.5 |
| IC1403 | 1190002110 | S.IC | NJG1519KC1-TE3-#ZZZB | T | 113.4/106.3 |
| IC1501 | 1110006121 | S.IC | DBM9A41-G-TR | T | 121.2/124.5 |
| IC1502 | 1110006121 | S.IC | DBM9A41-G-TR | T | 121.2/133 |
| IC1503 | 1110006100 | S.IC | NJM5534MD-TE1-#ZZZB | T | 138.4/151.7 |
| IC1504 | 1110006100 | S.IC | NJM5534MD-TE1-#ZZZB | T | 119.2/151.7 |
| IC1505 | 1110006190 | S.IC | NJM074M-TE1-#ZZZB | T | 128.8/166.9 |
| IC1506 | 1110006100 | S.IC | NJM5534MD-TE1-#ZZZB | T | 128.8/175.6 |
| IC1651 | 1130011921 | S.IC | TC74LCX00F(EL,F) | T | 110/126.2 |
| IC1652 | 1110005420 | S.IC | BA15532F-E2 | T | 139.8/175.6 |
| IC1653 | 1110005100 | S.IC | NJM072BM-TE1-#ZZZB | B | 140/172 |
| IC1701 | 1130011530 | S.IC | CD74HC4094M96 | T | 158/166.7 |
| IC1702 | 1130011530 | S.IC | CD74HC4094M96 | T | 148.9/166.7 |
| IC1703 | 1160000131 | S.IC | TD62783AFG(5,S,EL) | T | 157.3/154.8 |
| IC1704 | 1180000790 | S.IC | AN78L10M(E1) | B | 183.2/159.8 |
| Q1 | 1590001050 | S.TRA | DTC114TUA T106 | B | 30.3/22.6 |

## [RXPLL-A UNIT]

| REF NO. | PARTS NO. | DESCRIPTION | | M. | H/V LOCATION |
|---|---|---|---|---|---|
| Q30 | 1530002060 | S.TRA | 2SC4081 T106 R | T | 22.3/110.9 |
| Q41 | 1590000680 | S.TRA | DTC114EUA T106 | T | 12.8/34.2 |
| Q150 | 1560000331 | S.FET | 2SK210-GR(TE85R,F) | T | 26.9/53 |
| Q151 | 1530002280 | S.TRA | 2SC4081 T106 S | B | 33.6/57.2 |
| Q152 | 1530002280 | S.TRA | 2SC4081 T106 S | B | 30.8/78.2 |
| Q201 | 1590001330 | S.TRA | DTA114EUA T106 | T | 29.6/34.1 |
| Q220 | 1560000331 | S.FET | 2SK210-GR(TE85R,F) | T | 72.5/33.9 |
| Q230 | 1560000331 | S.FET | 2SK210-GR(TE85R,F) | T | 72.5/46.4 |
| Q240 | 1560000331 | S.FET | 2SK210-GR(TE85R,F) | T | 72.5/58.9 |
| Q250 | 1560000331 | S.FET | 2SK210-GR(TE85R,F) | T | 72.5/71.4 |
| Q260 | 1560000331 | S.FET | 2SK210-GR(TE85R,F) | T | 72.5/83.9 |
| Q270 | 1560000331 | S.FET | 2SK210-GR(TE85R,F) | T | 72.5/95.8 |
| Q280 | 1590000680 | S.TRA | DTC114EUA T106 | T | 82.3/34.4 |
| Q281 | 1590000680 | S.TRA | DTC114EUA T106 | T | 82.3/46.9 |
| Q282 | 1590000680 | S.TRA | DTC114EUA T106 | T | 82.3/59.4 |
| Q283 | 1590000680 | S.TRA | DTC114EUA T106 | T | 82.3/71.9 |
| Q284 | 1590000680 | S.TRA | DTC114EUA T106 | T | 82.3/84.4 |
| Q285 | 1590000680 | S.TRA | DTC114EUA T106 | T | 82.3/96.4 |
| Q301 | 1530003432 | S.TRA | 2SC5226A-4-TL-E | T | 92.1/30.1 |
| Q302 | 1530003432 | S.TRA | 2SC5226A-4-TL-E | B | 89.1/42.5 |
| Q303 | 1530003432 | S.TRA | 2SC5226A-4-TL-E | B | 91.3/25.1 |
| Q341 | 1590000680 | S.TRA | DTC114EUA T106 | T | 86.3/36.7 |
| Q351 | 1580000751 | S.FET | 3SK294(TE85L,F) | T | 92.1/56.9 |
| Q352 | 1530003432 | S.TRA | 2SC5226A-4-TL-E | B | 89.2/64.5 |
| Q363 | 1590000680 | S.TRA | DTC114EUA T106 | T | 86.8/54.3 |
| Q364 | 1590001330 | S.TRA | DTA114EUA T106 | T | 86.8/57.4 |
| Q421 | 1590000680 | S.TRA | DTC114EUA T106 | B | 96.2/91.6 |
| Q422 | 1590000680 | S.TRA | DTC114EUA T106 | B | 92.6/91.6 |
| Q441 | 1590000680 | S.TRA | DTC114EUA T106 | T | 86.5/73.7 |
| Q502 | 1590000680 | S.TRA | DTC114EUA T106 | T | 41.9/128.8 |
| Q540 | 1530002060 | S.TRA | 2SC4081 T106 R | B | 58.7/141.2 |
| Q541 | 1560000331 | S.FET | 2SK210-GR(TE85R,F) | T | 68.9/142.8 |
| Q561 | 1530003432 | S.TRA | 2SC5226A-4-TL-E | T | 70.6/153.8 |
| Q580 | 1530003432 | S.TRA | 2SC5226A-4-TL-E | T | 41.7/147.4 |
| Q591 | 1530003151 | S.TRA | 2SC4673D-TD-E | T | 61.7/166.5 |
| Q592 | 1520000561 | S.TRA | 2SB1123 T-TD-E | B | 52/165.3 |
| Q593 | 1590000680 | S.TRA | DTC114EUA T106 | B | 54.8/171.2 |
| Q680 | 1530002060 | S.TRA | 2SC4081 T106 R | T | 37.5/163.2 |
| Q702 | 1530002601 | S.TRA | 2SC4215-O(TE85R,F) | T | 31.4/110.9 |
| Q801 | 1560000561 | S.FET | 2SK882-GR(TE85L,F) | T | 82.8/147.3 |
| Q811 | 1560000561 | S.FET | 2SK882-GR(TE85L,F) | T | 77.4/177.6 |
| Q831 | 1560000561 | S.FET | 2SK882-GR(TE85L,F) | T | 88.7/155.1 |
| Q832 | 1520000561 | S.TRA | 2SB1123 T-TD-E | B | 77.9/167.1 |
| Q833 | 1590000680 | S.TRA | DTC114EUA T106 | B | 73.5/162.5 |
| Q1001 | 1530003851 | S.TRA | 2SC5551A-F-E | B | 174/9 |
| Q1004 | 1590001960 | S.TRA | XP4311(TX) | T | 150/18.8 |
| Q1005 | 1590001960 | S.TRA | XP4311(TX) | T | 145.9/18.8 |
| Q1006 | 1530003851 | S.TRA | 2SC5551A-F-E | B | 150/37.6 |
| Q1007 | 1530003851 | S.TRA | 2SC5551A-F-E | B | 176.5/42.5 |
| Q1008 | 1530003851 | S.TRA | 2SC5551A-F-E | B | 160.5/42.5 |
| Q1101 | 1530003860 | TRA | 2SC3950D | | |
| Q1102 | 1590000680 | S.TRA | DTC114EUA T106 | T | 165.5/133.8 |
| Q1103 | 1520000561 | S.TRA | 2SB1123 T-TD-E | B | 168.6/127.8 |
| Q1104 | 1530003860 | TRA | 2SC3950D | | |
| Q1105 | 1530003842 | S.TRA | 2SC5501A-4-TR-E | T | 166.5/142.1 |
| Q1205 | 1590001960 | S.TRA | XP4311(TX) | T | 158.8/55.6 |
| Q1209 | 1530003851 | S.TRA | 2SC5551A-F-E | B | 121/34.9 |
| Q1210 | 1530003851 | S.TRA | 2SC5551A-F-E | B | 111.5/34.9 |
| Q1211 | 1560001311 | S.FET | MMBFU310LT1G | T | 159.5/96.4 |
| Q1212 | 1560001311 | S.FET | MMBFU310LT1G | T | 153.5/96.4 |
| Q1213 | 1590000680 | S.TRA | DTC114EUA T106 | B | 156.9/123.7 |
| Q1214 | 1520000561 | S.TRA | 2SB1123 T-TD-E | B | 155.4/113.5 |
| Q1301 | 1530003151 | S.TRA | 2SC4673D-TD-E | T | 157.8/120 |
| Q1352 | 1530003851 | S.TRA | 2SC5551A-F-E | B | 140/66.7 |
| Q1401 | 1530003842 | S.TRA | 2SC5501A-4-TR-E | T | 131.9/105.8 |
| Q1402 | 1530003021 | S.TRA | 2SC4402-3-TL-E | T | 123.4/111.8 |
| Q1403 | 1530003021 | S.TRA | 2SC4402-3-TL-E | T | 123.4/114.3 |
| Q1501 | 1530003450 | S.TRA | 2SC4835G R(TX) | T | 133.5/143.5 |
| Q1502 | 1530003450 | S.TRA | 2SC4835G R(TX) | T | 120.4/143.5 |
| Q1651 | 1530002601 | S.TRA | 2SC4215-O(TE85R,F) | B | 105.6/140.3 |
| Q1701 | 1590001960 | S.TRA | XP4311(TX) | T | 106.6/43.9 |
| Q1702 | 1590001960 | S.TRA | XP4311(TX) | T | 148.9/147.2 |
| Q1703 | 1590001960 | S.TRA | XP4311(TX) | T | 146.4/147.2 |
| D101 | 1750000520 | S.DIO | DAN222TL | T | 41.8/86.2 |
| D152 | 1720000590 | S.VAR | MA357(TX) | T | 17.6/59.9 |
| D153 | 1790000491 | S.DIO | HSM88ASTR-E | T | 27.2/60.4 |
| D154 | 1790000491 | S.DIO | HSM88ASTR-E | T | 27.2/63.8 |
| D201 | 1750000520 | S.DIO | DAN222TL | T | 32.4/34.1 |
| D220 | 1720000590 | S.VAR | MA357(TX) | T | 50.8/31.8 |
| D221 | 1720000590 | S.VAR | MA357(TX) | T | 52.9/31.8 |
| D222 | 1790000620 | S.DIO | MA77(TX) | T | 82.6/29.8 |
| D230 | 1720000590 | S.VAR | MA357(TX) | T | 50.8/44.2 |
| D231 | 1720000590 | S.VAR | MA357(TX) | T | 52.9/44.2 |
| D232 | 1790000620 | S.DIO | MA77(TX) | T | 82.6/42.3 |
| D240 | 1720000590 | S.VAR | MA357(TX) | T | 50.8/56.7 |
| D241 | 1720000590 | S.VAR | MA357(TX) | T | 52.9/56.7 |
| D242 | 1790000620 | S.DIO | MA77(TX) | T | 82.6/54.8 |
| D250 | 1720000590 | S.VAR | MA357(TX) | T | 50.8/69.2 |
| D252 | 1790000620 | S.DIO | MA77(TX) | T | 82.6/67.3 |
| D261 | 1720000590 | S.VAR | MA357(TX) | T | 52.9/81.7 |
| D262 | 1790000620 | S.DIO | MA77(TX) | T | 82.6/79.8 |
| D270 | 1720000590 | S.VAR | MA357(TX) | T | 50.8/94.2 |
| D271 | 1720000590 | S.VAR | MA357(TX) | T | 52.4/96.7 |
| D272 | 1790000620 | S.DIO | MA77(TX) | T | 82.5/92 |
| D341 | 1790000620 | S.DIO | MA77(TX) | T | 90/37.2 |
| D342 | 1160000070 | S.DIO | DAN202K T146 | B | 81.1/47.7 |
| D362 | 1790000620 | S.DIO | MA77(TX) | T | 88.3/65.5 |
| D363 | 1790000620 | S.DIO | MA77(TX) | T | 88.3/62 |
| D421 | 1790000620 | S.DIO | MA77(TX) | T | 91.9/85 |
| D422 | 1790000620 | S.DIO | MA77(TX) | T | 88.6/85 |
| D423 | 1790000620 | S.DIO | MA77(TX) | T | 92.5/91.2 |
| D424 | 1790000620 | S.DIO | MA77(TX) | T | 88.9/91.2 |
| D441 | 1790000620 | S.DIO | MA77(TX) | T | 89.6/74.4 |

M.=Mounted side (T: Mounted on the Top side, B: Mounted on the Bottom side)
S.=Surface mount

## [RXPLL-A UNIT]

| REF NO. | PARTS NO. | DESCRIPTION | | M. | H/V LOCATION |
|---|---|---|---|---|---|
| D501 | 1750000520 | S.DIO | DAN222TL | T | 42/132 |
| D542 | 1720000590 | S.VAR | MA357(TX) | T | 62.5/139.6 |
| D821 | 1750000431 | S.DIO | HSB88WSTR-E | T | 84.1/169.4 |
| D1001 | 1750000581 | S.DIO | 1SV307(TPH3,F) | T | 181.9/65.7 |
| D1101 | 1790000620 | S.DIO | MA77(TX) | T | 177.6/146.6 |
| D1102 | 1790000620 | S.DIO | MA77(TX) | T | 177.6/148.4 |
| D1201 | 1750000581 | S.DIO | 1SV307(TPH3,F) | T | 139.1/57.7 |
| D1351 | 1750000581 | S.DIO | 1SV307(TPH3,F) | T | 140.8/71.1 |
| D1653 | 1750000550 | S.DIO | 1SS355 TE-17 | T | 138.9/167.2 |
| D1654 | 1750000550 | S.DIO | 1SS355 TE-17 | T | 142.5/167.2 |
| D1701 | 1790001670 | S.DIO | RB706F-40T106 | T | 170.5/160.8 |
| FI101 | 2020001820 | S.CER | SFECV10M5FA00-R0 (SFECV10.5MA5S) | T | 26/73.9 |
| FI831 | 2030000300 | S.MON | DSF753SBF 64.491 MHz (FL-356) | T | 91.6/162.1 |
| FI1401 | 2030000281 | S.MON | DSF753SDF 64.455 MHz (FL-364A) | T | 116.3/88.5 |
| FI1402 | 2030000331 | S.MON | DSF753SDF 64.455 MHz (FL-358A) | T | 107/88.5 |
| FI1403 | 2030000510 | S.MON | DSF753SDF 64.455 MHz (FL-396) | T | 126/85.5 |
| L1 | 6200003261 | S.COI | NLV32T-101J | T | 10.8/15.4 |
| L2 | 6200003261 | S.COI | NLV32T-101J | T | 29/19.9 |
| L10 | 6200003950 | S.COI | HF50ACC 322513-T | T | 38.6/14.7 |
| L11 | 6200003950 | S.COI | HF50ACC 322513-T | T | 13.8/15.4 |
| L12 | 6200003950 | S.COI | HF50ACC 322513-T | T | 16.8/15.4 |
| L13 | 6200003950 | S.COI | HF50ACC 322513-T | T | 29/15.4 |
| L20 | 6200003321 | S.COI | NLV32T-3R3J | T | 85.9/123.8 |
| L30 | 6200005491 | S.COI | NLV32T-331J | T | 20.6/120 |
| L101 | 6200001831 | S.COI | NLV32T-100J | T | 38.3/72.8 |
| L151 | 6130002970 | COI | LB-343 | | |
| L152 | 6200001831 | S.COI | NLV32T-100J | T | 30/54.5 |
| L201 | 6200005011 | S.COI | NLV25T-100J | T | 22.2/45 |
| L211 | 6200003661 | S.COI | NLV25T-R68J | B | 45.4/35.3 |
| L220 | 6200010790 | S.COI | C2520C-3R9G-A | T | 51.9/37.5 |
| L221 | 6190001421 | COI | #E526GN-110502 | | |
| L222 | 6200010790 | S.COI | C2520C-3R9G-A | T | 76.2/37.7 |
| L230 | 6200010830 | S.COI | C2520C-3R3G-A | T | 51.9/50 |
| L231 | 6190001421 | COI | #E526GN-110502 | | |
| L232 | 6200010830 | S.COI | C2520C-3R3G-A | T | 76.2/50.2 |
| L240 | 6200010830 | S.COI | C2520C-3R3G-A | T | 51.9/62.4 |
| L241 | 6190001421 | COI | #E526GN-110502 | | |
| L242 | 6200010830 | S.COI | C2520C-3R3G-A | T | 76.2/62.7 |
| L250 | 6200010820 | S.COI | C2520C-2R7G-A | T | 51.9/74.9 |
| L251 | 6190001421 | COI | #E526GN-110502 | | |
| L252 | 6200010820 | S.COI | C2520C-2R7G-A | T | 76.2/75.2 |
| L260 | 6200010820 | S.COI | C2520C-2R7G-A | T | 51.9/87.4 |
| L261 | 6190001411 | COI | #E526GN-110501 | | |
| L262 | 6200010820 | S.COI | C2520C-2R7G-A | T | 76.2/87.7 |
| L270 | 6200010810 | S.COI | C2520C-2R2G-A | T | 51.9/99.8 |
| L271 | 6190001411 | COI | #E526GN-110501 | | |
| L272 | 6200010810 | S.COI | C2520C-2R2G-A | T | 76/100.2 |
| L280 | 6200005011 | S.COI | NLV25T-100J | T | 67.4/25.5 |
| L302 | 6200001831 | S.COI | NLV32T-100J | T | 89.3/42.6 |
| L331 | 6200002641 | S.COI | NLV25T-R15J | T | 95.1/34.1 |
| L332 | 6200002411 | S.COI | NLV25T-056J | B | 93.2/36 |
| L341 | 6200003261 | S.COI | NLV32T-101J | T | 87/39.6 |
| L351 | 6200001831 | S.COI | NLV32T-100J | T | 91.3/62 |
| L421 | 6200008641 | S.COI | NLV32T-391J | T | 87/81 |
| L441 | 6200002601 | S.COI | NLV25T-047J | T | 91.9/72.3 |
| L442 | 6200010730 | S.COI | C2520C-68NG-A | T | 90.5/78.2 |
| L451 | 6200002641 | S.COI | NLV25T-R15J | T | 95/81 |
| L452 | 6200003261 | S.COI | NLV32T-101J | T | 87/78 |
| L501 | 6200001831 | S.COI | NLV32T-100J | T | 31/125.8 |
| L530 | 6200003171 | S.COI | NLV32T-330J | T | 14.6/134.9 |
| L531 | 6200003171 | S.COI | NLV32T-330J | T | 14.6/130.8 |
| L532 | 6200003171 | S.COI | NLV32T-330J | T | 15.5/127.1 |
| L541 | 6200010790 | S.COI | C2520C-3R9G-A | T | 56.3/139.6 |
| L542 | 6190001421 | COI | #E526GN-110502 | | |
| L543 | 6200010790 | S.COI | C2520C-3R9G-A | T | 68.4/147.9 |
| L544 | 6200003261 | S.COI | NLV32T-101J | B | 65.9/142.1 |
| L545 | 6200003261 | S.COI | NLV32T-101J | B | 51.3/139.6 |
| L561 | 6200003261 | S.COI | NLV32T-101J | B | 64/156 |
| L562 | 6200001831 | S.COI | NLV32T-100J | B | 74.6/151.8 |
| L565 | 6150004250 | COI | LS-471A (C-14922) | | |
| L566 | 6150004250 | COI | LS-471A (C-14922) | | |
| L591 | 6200007790 | S.COI | LQW2BHNR15J03L | T | 60.5/171.5 |
| L651 | 6200001831 | S.COI | NLV32T-100J | T | 15.5/176.3 |
| L681 | 6200005491 | S.COI | NLV32T-331J | T | 37.4/176.2 |
| L682 | 6200008641 | S.COI | NLV32T-391J | T | 37.8/172.6 |
| L683 | 6200008641 | S.COI | NLV32T-391J | T | 40.2/166.2 |
| L701 | 6200003261 | S.COI | NLV32T-101J | T | 23.6/120 |
| L702 | 6150004971 | S.COI | LS-522-LF | T | 37.6/108.6 |
| L703 | 6150004971 | S.COI | LS-522-LF | T | 37.5/118.5 |
| L801 | 6150004280 | COI | LS-484B (C-14927) | | |
| L812 | 6200003231 | S.COI | NLV32T-181J | B | 75.3/174.1 |
| L821 | 6140003530 | COI | LR-395 | | |
| L822 | 6140003530 | COI | LR-395 | | |
| L831 | 6140003770 | S.COI | LR-414 4KBL (STP-01435) | T | 91.6/171.6 |
| L834 | 6150004280 | COI | LS-484B (C-14927) | | |
| L1001 | 6190001650 | COI | ELC06D102E | | |
| L1002 | 6140004400 | COI | LR-499 | | |
| L1004 | 6140003890 | COI | LR-488 | | |
| L1005 | 6180001000 | COI | LAL 04NA 102K | | |
| L1006 | 6140003900 | COI | LR-489 | | |
| L1007 | 6140003800 | COI | LR-439 | | |
| L1008 | 6190001650 | COI | ELC06D102E | | |
| L1009 | 6190001650 | COI | ELC06D102E | | |
| L1010 | 6140003880 | COI | LR-486 | | |
| L1011 | 6140003880 | COI | LR-486 | | |
| L1012 | 6140003800 | COI | LR-439 | | |
| L1013 | 6200010680 | S.COI | C2520C-R22G-A (0.22U) | T | 155/55.2 |

## [RXPLL-A UNIT]

| REF NO. | PARTS NO. | DESCRIPTION | | M. | H/V LOCATION |
|---|---|---|---|---|---|
| L1014 | 6200010680 | S.COI | C2520C-R22G-A (0.22U) | T | 157.9/12.4 |
| L1015 | 6200007790 | S.COI | LQW2BHNR15J03L | B | 163.5/27.5 |
| L1052 | 6200010740 | S.COI | C2520C-R27G-A | T | 177.8/74.6 |
| L1053 | 6200010740 | S.COI | C2520C-R27G-A | T | 173.8/73.5 |
| L1054 | 6200010740 | S.COI | C2520C-R27G-A | T | 169.4/72.6 |
| L1055 | 6140003960 | COI | LR-495 | | |
| L1056 | 6200010730 | S.COI | C2520C-68NG-A | T | 171/83.8 |
| L1058 | 6190001631 | COI | #E544EN-100021 | | |
| L1060 | 6200010730 | S.COI | C2520C-68NG-A | T | 149.1/76.4 |
| L1062 | 6200011450 | S.COI | C2520C-R39G-A | T | 145.1/81.4 |
| L1063 | 6200010650 | S.COI | C2520C-R12G-A (0.12U) | T | 140.9/82.5 |
| L1071 | 6200007780 | S.COI | LQW2BHNR12J03L | B | 164.9/79.2 |
| L1072 | 6200007780 | S.COI | LQW2BHNR12J03L | B | 168/76.1 |
| L1091 | 6200003950 | S.COI | HF50ACC 322513-T | B | 171/149 |
| L1092 | 6200003950 | S.COI | HF50ACC 322513-T | T | 149.7/136.5 |
| L1093 | 6200003950 | S.COI | HF50ACC 322513-T | T | 157/135.2 |
| L1101 | 6140003920 | COI | LR-491 | | |
| L1102 | 6200010650 | S.COI | C2520C-R12G-A (0.12U) | T | 176.9/117.9 |
| L1103 | 6180001250 | COI | LAL 04NA 3R3K | | |
| L1104 | 6200010870 | S.COI | C2520C-R33G-A (0.33U) | T | 178.3/135.9 |
| L1105 | 6140003910 | COI | LR-490 | | |
| L1151 | 6140004640 | COI | LR-519 | | |
| L1201 | 6200007780 | S.COI | LQW2BHNR12J03L | B | 119.3/17.4 |
| L1208 | 6140003800 | COI | LR-439 | | |
| L1209 | 6200001831 | S.COI | NLV32T-100J | T | 121.1/20.8 |
| L1210 | 6140004440 | COI | LR-503 | | |
| L1211 | 6200009690 | S.COI | LQH43CN101K03L | T | 115.7/34.6 |
| L1212 | 6200001831 | S.COI | NLV32T-100J | T | 106.8/20.8 |
| L1213 | 6140004440 | COI | LR-503 | | |
| L1214 | 6200009690 | S.COI | LQH43CN101K03L | T | 105.9/34.8 |
| L1216 | 6140003800 | COI | LR-439 | | |
| L1217 | 6200007750 | S.COI | LQW2BHN56NJ03L | T | 147.9/63.7 |
| L1218 | 6200007770 | S.COI | LQW2BHNR10J03L | T | 153.3/65.1 |
| L1219 | 6200007790 | S.COI | LQW2BHNR15J03L | T | 153.2/68.4 |
| L1220 | 6140000930 | COI | LR-116 | | |
| L1221 | 6200003261 | S.COI | NLV32T-101J | B | 149.5/110.9 |
| L1222 | 6150005460 | COI | LS-559 | | |
| L1223 | 6200007750 | S.COI | LQW2BHN56NJ03L | B | 151.3/100.7 |
| L1228 | 6200010870 | S.COI | C2520C-R33G-A (0.33U) | T | 158.7/71.3 |
| L1229 | 6200003950 | S.COI | HF50ACC 322513-T | B | 164.7/115 |
| L1301 | 6200008090 | S.COI | LQW2BHN68NJ03L | T | 157.1/111.9 |
| L1302 | 6200008090 | S.COI | LQW2BHN68NJ03L | T | 156.4/115.5 |
| L1303 | 6200008090 | S.COI | LQW2BHN68NJ03L | T | 153.4/117.5 |
| L1304 | 6200010870 | S.COI | C2520C-R33G-A (0.33U) | T | 153.8/123 |
| L1305 | 6200003001 | S.COI | NLV32T-R22J | T | 159.2/124.5 |
| L1306 | 6200001831 | S.COI | NLV32T-100J | B | 152.7/118.6 |
| L1307 | 6200003001 | S.COI | NLV32T-R22J | T | 153.3/112 |
| L1351 | 6200001831 | S.COI | NLV32T-100J | T | 143/76.4 |
| L1353 | 6200010740 | S.COI | C2520C-R27G-A | T | 141.6/67.5 |
| L1354 | 6200001831 | S.COI | NLV32T-100J | T | 136.4/68 |
| L1401 | 6150004280 | COI | LS-484B (C-14927) | | |
| L1402 | 6150004280 | COI | LS-484B (C-14927) | | |
| L1403 | 6150004280 | COI | LS-484B (C-14927) | | |
| L1404 | 6150004280 | COI | LS-484B (C-14927) | | |
| L1405 | 6200007770 | S.COI | LQW2BHNR10J03L | B | 112.5/111.4 |
| L1406 | 6200007750 | S.COI | LQW2BHN56NJ03L | B | 116.6/111.4 |
| L1407 | 6140003930 | COI | LR-492 | | |
| L1408 | 6190001621 | COI | #E544EN-100028 | | |
| L1409 | 6200003191 | S.COI | NLV32T-470J | B | 135.8/125.4 |
| L1410 | 6150004280 | COI | LS-484B (C-14927) | | |
| L1411 | 6150004280 | COI | LS-484B (C-14927) | | |
| L1501 | 6200003520 | S.COI | ELJFB 102K-F | T | 142.1/145.1 |
| L1652 | 6200002520 | S.COI | ELJNC R18K-F | T | 112.9/133.1 |
| L1653 | 6200001831 | S.COI | NLV32T-100J | B | 105.4/124.6 |
| L1654 | 6200001831 | S.COI | NLV32T-100J | B | 112.4/141.9 |
| L1655 | 6200001831 | S.COI | NLV32T-100J | B | 124.7/139.8 |
| L1701 | 6200001831 | S.COI | NLV32T-100J | T | 167/160 |
| L1702 | 6200003950 | S.COI | HF50ACC 322513-T | T | 175.6/169.8 |
| L1703 | 6200003950 | S.COI | HF50ACC 322513-T | T | 172.6/169.8 |
| L1704 | 6200003950 | S.COI | HF50ACC 322513-T | T | 169.6/169.8 |
| L1705 | 6200003950 | S.COI | HF50ACC 322513-T | T | 165.5/169.8 |
| L1803 | 6200003950 | S.COI | HF50ACC 322513-T | B | 132/54.8 |
| L1804 | 6200003950 | S.COI | HF50ACC 322513-T | B | 118/154.8 |
| L1805 | 6200003950 | S.COI | HF50ACC 322513-T | B | 155.2/132 |
| L1807 | 6200003950 | S.COI | HF50ACC 322513-T | B | 118/151.3 |
| L1808 | 6200003950 | S.COI | HF50ACC 322513-T | B | 141.3/162 |
| L1809 | 6200003950 | S.COI | HF50ACC 322513-T | B | 149.5/115.6 |
| R1 | 7030005871 | S.RES | ERA3YKD 104V (100K) | T | 32.5/19.2 |
| R2 | 7030005321 | S.RES | ERA3YED 103V (10K) | T | 31.2/19.2 |
| R3 | 7030003550 | S.RES | ERJ3GEYJ 822 V (8.2K) | T | 16.9/23.5 |
| R4 | 7030003550 | S.RES | ERJ3GEYJ 822 V (8.2K) | T | 16.9/24.8 |
| R5 | 7030003550 | S.RES | ERJ3GEYJ 822 V (8.2K) | T | 13.3/31.3 |
| R6 | 7030003550 | S.RES | ERJ3GEYJ 822 V (8.2K) | T | 13.3/30 |
| R7 | 7030003500 | S.RES | ERJ3GEYJ 332 V (3.3K) | B | 26.7/12.9 |
| R8 | 7030003470 | S.RES | ERJ3GEYJ 182 V (1.8K) | B | 28.2/14.6 |
| R9 | 7030003680 | S.RES | ERJ3GEYJ 104 V (100K) | B | 27.5/10.6 |
| R10 | 7030003360 | S.RES | ERJ3GEYJ 221 V (220) | T | 19/16 |
| R11 | 7030003360 | S.RES | ERJ3GEYJ 221 V (220) | T | 20.3/16 |
| R12 | 7030003360 | S.RES | ERJ3GEYJ 221 V (220) | T | 22.4/16 |
| R13 | 7030003360 | S.RES | ERJ3GEYJ 221 V (220) | T | 23.7/16 |
| R14 | 7030003360 | S.RES | ERJ3GEYJ 221 V (220) | T | 25/16 |
| R15 | 7030003360 | S.RES | ERJ3GEYJ 221 V (220) | T | 26.4/16.2 |
| R16 | 7030003360 | S.RES | ERJ3GEYJ 221 V (220) | T | 32.5/15.4 |
| R17 | 7030003360 | S.RES | ERJ3GEYJ 221 V (220) | T | 33.8/15.4 |
| R30 | 7030003240 | S.RES | ERJ3GEYJ 220 V (22) | T | 21.7/113.7 |
| R31 | 7030003600 | S.RES | ERJ3GEYJ 223 V (22K) | T | 20.4/111.1 |
| R32 | 7030003320 | S.RES | ERJ3GEYJ 101 V (100) | T | 23/113.7 |
| R33 | 7030003340 | S.RES | ERJ3GEYJ 151 V (150) | T | 19.1/115 |
| R51 | 7030011030 | S.RES | ERJ1TYJ 270U (27) | T | 66.3/13.9 |
| R52 | 7030010550 | S.RES | ERJ1TYJ 820U (82) | B | 66.3/13.9 |
| R61 | 7030011030 | S.RES | ERJ1TYJ 270U (27) | T | 45.1/13.9 |
| R100 | 7030003860 | S.RES | ERJ3GE JPW V | T | 35.4/101.5 |
| R101 | 7030003740 | S.RES | ERJ3GEYJ 334 V (330K) | T | 34.1/101.5 |

M.=Mounted side (T: Mounted on the Top side, B: Mounted on the Bottom side)
S.=Surface mount

## [RXPLL-A UNIT]

| REF NO. | PARTS NO. | DESCRIPTION | M. | H/V LOCATION |
|---|---|---|---|---|
| R103 | 7030007230 | S.RES ERA3YED 102V (1K) | T | 25.1/100.3 |
| R104 | 7030007230 | S.RES ERA3YED 102V (1K) | T | 26.4/100.3 |
| R105 | 7030007230 | S.RES ERA3YED 102V (1K) | T | 27.8/100.3 |
| R106 | 7030003360 | S.RES ERJ3GEYJ 221 V (220) | T | 29.1/100.3 |
| R107 | 7030003320 | S.RES ERJ3GEYJ 101 V (100) | T | 38/101.5 |
| R108 | 7030007230 | S.RES ERA3YED 102V (1K) | T | 28.9/79 |
| R109 | 7030007230 | S.RES ERA3YED 102V (1K) | T | 41.9/84.5 |
| R110 | 7030007220 | S.RES ERA3YED 202V (2K) | T | 14.6/100.5 |
| R111 | 7030007220 | S.RES ERA3YED 202V (2K) | T | 17.2/100.5 |
| R112 | 7030007220 | S.RES ERA3YED 202V (2K) | T | 17.2/99.2 |
| R113 | 7030007220 | S.RES ERA3YED 202V (2K) | T | 17.2/97.9 |
| R114 | 7030007220 | S.RES ERA3YED 202V (2K) | T | 17.2/96.6 |
| R115 | 7030007220 | S.RES ERA3YED 202V (2K) | T | 17.2/95.2 |
| R116 | 7030007220 | S.RES ERA3YED 202V (2K) | T | 17.2/93.9 |
| R117 | 7030007220 | S.RES ERA3YED 202V (2K) | T | 17.2/92.6 |
| R118 | 7030007200 | S.RES ERA3YEB 202V (2K) | T | 17.2/91.3 |
| R119 | 7030007200 | S.RES ERA3YEB 202V (2K) | T | 17.2/89.6 |
| R120 | 7030007200 | S.RES ERA3YEB 202V (2K) | T | 17.2/87 |
| R121 | 7030007200 | S.RES ERA3YEB 202V (2K) | T | 17.2/84.4 |
| R122 | 7030007200 | S.RES ERA3YEB 202V (2K) | T | 17.2/81.8 |
| R123 | 7030007230 | S.RES ERA3YED 102V (1K) | T | 14.6/99.2 |
| R124 | 7030007230 | S.RES ERA3YED 102V (1K) | T | 14.6/97.9 |
| R125 | 7030007230 | S.RES ERA3YED 102V (1K) | T | 14.6/96.6 |
| R126 | 7030007230 | S.RES ERA3YED 102V (1K) | T | 14.6/95.2 |
| R127 | 7030007230 | S.RES ERA3YED 102V (1K) | T | 14.6/93.9 |
| R128 | 7030007230 | S.RES ERA3YED 102V (1K) | T | 14.6/92.6 |
| R129 | 7030007210 | S.RES ERA3YEB 102V (1K) | T | 14.6/91.3 |
| R130 | 7030007210 | S.RES ERA3YEB 102V (1K) | T | 14.6/89.6 |
| R131 | 7030007210 | S.RES ERA3YEB 102V (1K) | T | 14.6/88.3 |
| R132 | 7030007210 | S.RES ERA3YEB 102V (1K) | T | 14.6/87 |
| R133 | 7030007210 | S.RES ERA3YEB 102V (1K) | T | 14.6/85.7 |
| R134 | 7030009861 | S.RES ERA3YED 471V (470) | T | 14.6/84.4 |
| R135 | 7030003860 | S.RES ERJ3GE JPW V | T | 30.4/75.8 |
| R136 | 7030003800 | S.RES ERJ3GEYJ 105 V (1M) | T | 33/77.1 |
| R137 | 7030003200 | S.RES ERJ3GEYJ 100 V (10) | T | 35.5/75.8 |
| R138 | 7030003860 | S.RES ERJ3GE JPW V | T | 16.8/78.6 |
| R139 | 7030003860 | S.RES ERJ3GE JPW V | T | 17.6/75.8 |
| R140 | 7030007230 | S.RES ERA3YED 102V (1K) | B | 31.2/92.1 |
| R141 | 7030003320 | S.RES ERJ3GEYJ 101 V (100) | B | 33.8/86.7 |
| R150 | 7030003330 | S.RES ERJ3GEYJ 121 V (120) | B | 37.8/86.2 |
| R151 | 7030003220 | S.RES ERJ3GEYJ 150 V (15) | B | 38.6/88.1 |
| R152 | 7030005871 | S.RES ERA3YKD 104V (100K) | B | 36.2/82.5 |
| R153 | 7030005321 | S.RES ERA3YED 103V (10K) | T | 19.2/62.7 |
| R154 | 7030003320 | S.RES ERJ3GEYJ 101 V (100) | B | 26.3/54.1 |
| R155 | 7030003350 | S.RES ERJ3GEYJ 181 V (180) | B | 23/54.1 |
| R156 | 7030005871 | S.RES ERA3YKD 104V (100K) | T | 24.6/53.1 |
| R157 | 7030005871 | S.RES ERA3YKD 104V (100K) | T | 26.9/58 |
| R158 | 7030003340 | S.RES ERJ3GEYJ 151 V (150) | T | 30/57.3 |
| R159 | 7030003320 | S.RES ERJ3GEYJ 101 V (100) | B | 33.6/61.4 |
| R160 | 7030003360 | S.RES ERJ3GEYJ 221 V (220) | B | 33.6/59.6 |
| R161 | 7030003640 | S.RES ERJ3GEYJ 473 V (47K) | B | 33.6/54.8 |
| R163 | 7030003220 | S.RES ERJ3GEYJ 150 V (15) | B | 30.2/56.6 |
| R164 | 7030003310 | S.RES ERJ3GEYJ 820 V (82) | B | 34.1/70.4 |
| R165 | 7030003320 | S.RES ERJ3GEYJ 101 V (100) | B | 30.8/70.4 |
| R166 | 7030003320 | S.RES ERJ3GEYJ 101 V (100) | B | 30.8/72.2 |
| R167 | 7030003240 | S.RES ERJ3GEYJ 220 V (22) | B | 37.4/75.8 |
| R168 | 7030003360 | S.RES ERJ3GEYJ 221 V (220) | B | 34.1/75.8 |
| R169 | 7030003640 | S.RES ERJ3GEYJ 473 V (47K) | B | 30.8/75.8 |
| R202 | 7030007230 | S.RES ERA3YED 102V (1K) | T | 22.2/39.7 |
| R203 | 7030007230 | S.RES ERA3YED 102V (1K) | T | 22.2/38.4 |
| R204 | 7030003360 | S.RES ERJ3GEYJ 221 V (220) | T | 22.2/37.1 |
| R205 | 7030005321 | S.RES ERA3YED 103V (10K) | T | 27.4/34 |
| R206 | 7030003220 | S.RES ERJ3GEYJ 150 V (15) | T | 31.1/45.7 |
| R210 | 7030005351 | S.RES ERA3YED 182V (1.8K) | T | 35.6/37.5 |
| R217 | 7030009651 | S.RES ERA3YHD 820V (82) | B | 40.4/42.8 |
| R219 | 7030009691 | S.RES ERA3YED 101V (100) | B | 40/35.7 |
| R220 | 7030005871 | S.RES ERA3YKD 104V (100K) | T | 73.2/37.6 |
| R221 | 7030005871 | S.RES ERA3YKD 104V (100K) | T | 72.3/30.9 |
| R222 | 7030003400 | S.RES ERJ3GEYJ 471 V (470) | T | 81.4/38.3 |
| R223 | 7030007230 | S.RES ERA3YED 102V (1K) | T | 81.9/31.9 |
| R224 | 7030003320 | S.RES ERJ3GEYJ 101 V (100) | T | 73.2/40.2 |
| R230 | 7030005871 | S.RES ERA3YKD 104V (100K) | T | 73.2/50.1 |
| R231 | 7030005871 | S.RES ERA3YKD 104V (100K) | T | 72.3/43.3 |
| R232 | 7030003360 | S.RES ERJ3GEYJ 221 V (220) | T | 81.4/50.8 |
| R233 | 7030007230 | S.RES ERA3YED 102V (1K) | T | 81.9/44.4 |
| R234 | 7030003320 | S.RES ERJ3GEYJ 101 V (100) | T | 73.2/52.7 |
| R240 | 7030005871 | S.RES ERA3YKD 104V (100K) | T | 73.2/62.6 |
| R241 | 7030005871 | S.RES ERA3YKD 104V (100K) | T | 72.3/55.8 |
| R242 | 7030003360 | S.RES ERJ3GEYJ 221 V (220) | T | 81.4/63.3 |
| R243 | 7030007230 | S.RES ERA3YED 102V (1K) | T | 81.9/56.9 |
| R244 | 7030003320 | S.RES ERJ3GEYJ 101 V (100) | T | 73.2/65.2 |
| R250 | 7030005871 | S.RES ERA3YKD 104V (100K) | T | 73.2/75.1 |
| R251 | 7030005871 | S.RES ERA3YKD 104V (100K) | T | 72.3/68.4 |
| R252 | 7030003360 | S.RES ERJ3GEYJ 221 V (220) | T | 81.4/75.8 |
| R253 | 7030007230 | S.RES ERA3YED 102V (1K) | T | 81.9/69.4 |
| R254 | 7030003320 | S.RES ERJ3GEYJ 101 V (100) | T | 73.2/77.7 |
| R260 | 7030005871 | S.RES ERA3YKD 104V (100K) | T | 73.2/87.6 |
| R261 | 7030005871 | S.RES ERA3YKD 104V (100K) | T | 72.3/80.9 |
| R262 | 7030003400 | S.RES ERJ3GEYJ 471 V (470) | T | 81.4/88.3 |
| R263 | 7030007230 | S.RES ERA3YED 102V (1K) | T | 81.9/81.9 |
| R264 | 7030003320 | S.RES ERJ3GEYJ 101 V (100) | T | 73.2/90.2 |
| R270 | 7030005871 | S.RES ERA3YKD 104V (100K) | T | 73.2/99.5 |
| R271 | 7030005871 | S.RES ERA3YKD 104V (100K) | T | 72.3/92.8 |
| R272 | 7030003360 | S.RES ERJ3GEYJ 221 V (220) | T | 81.4/100.8 |
| R273 | 7030007230 | S.RES ERA3YED 102V (1K) | T | 81.9/93.9 |
| R274 | 7030003320 | S.RES ERJ3GEYJ 101 V (100) | T | 73.2/102.1 |
| R301 | 7030003200 | S.RES ERJ3GEYJ 100 V (10) | T | 86.5/30.6 |
| R302 | 7030007230 | S.RES ERA3YED 102V (1K) | T | 86.5/29.3 |
| R303 | 7030003360 | S.RES ERJ3GEYJ 221 V (220) | T | 92.1/28 |
| R304 | 7030003490 | S.RES ERJ3GEYJ 272 V (2.7K) | T | 94/30.1 |
| R305 | 7030003510 | S.RES ERJ3GEYJ 392 V (3.9K) | T | 95.3/30.1 |
| R306 | 7030003360 | S.RES ERJ3GEYJ 221 V (220) | T | 94.7/32.2 |
| R307 | 7030009841 | S.RES ERA3YHD 330V (33) | T | 92.1/32.2 |

## [RXPLL-A UNIT]

| REF NO. | PARTS NO. | DESCRIPTION | M. | H/V LOCATION |
|---|---|---|---|---|
| R308 | 7030003370 | S.RES ERJ3GEYJ 271 V (270) [USA] | B | 92.6/43.4 |
| | 7030003370 | S.RES ERJ3GEYJ 271 V (270) [EUR] | | |
| | 7030003370 | S.RES ERJ3GEYJ 271 V (270) [FRA] | | |
| | 7030003370 | S.RES ERJ3GEYJ 271 V (270) [DEN] | | |
| | 7030003370 | S.RES ERJ3GEYJ 271 V (270) [ITR] | | |
| | 7030003370 | S.RES ERJ3GEYJ 271 V (270) [KOR] | | |
| | 7030003370 | S.RES ERJ3GEYJ 271 V (270) [ESP] | | |
| | 7030003370 | S.RES ERJ3GEYJ 271 V (270) [AUS] | | |
| | 7030003370 | S.RES ERJ3GEYJ 271 V (270) [UK] | | |
| | 7030003370 | S.RES ERJ3GEYJ 271 V (270) [RX] | | |
| | 7030009851 | S.RES ERA3YED 271V (270) [CHN] | | |
| R309 | 7030003540 | S.RES ERJ3GEYJ 682 V (6.8K) | B | 89.1/47 |
| R310 | 7030003500 | S.RES ERJ3GEYJ 332 V (3.3K) | B | 92.6/47 |
| R311 | 7030003350 | S.RES ERJ3GEYJ 181 V (180) | B | 89.1/45.2 |
| R312 | 7030003360 | S.RES ERJ3GEYJ 221 V (220) | B | 92.4/27.8 |
| R313 | 7030003490 | S.RES ERJ3GEYJ 272 V (2.7K) | B | 91.1/23.1 |
| R314 | 7030003510 | S.RES ERJ3GEYJ 392 V (3.9K) | B | 88.3/23.1 |
| R315 | 7030003360 | S.RES ERJ3GEYJ 221 V (220) | B | 87.5/25.1 |
| R316 | 7030003280 | S.RES ERJ3GEYJ 470 V (47) | B | 78.3/26.1 |
| R317 | 7030006220 | S.RES ERJ12YJ470U (47) | B | 90/31.4 |
| R318 | 7030009841 | S.RES ERA3YHD 330V (33) | B | 92.6/41.6 |
| R341 | 7030007230 | S.RES ERA3YED 102V (1K) | T | 92.1/40.1 |
| R342 | 7030005321 | S.RES ERA3YED 103V (10K) | T | 86.5/32.2 |
| R343 | 7030007230 | S.RES ERA3YED 102V (1K) | T | 89.3/34.8 |
| R351 | 7030003200 | S.RES ERJ3GEYJ 100 V (10) | B | 89.1/52.4 |
| R352 | 7030010980 | S.RES ERA3YHD 470V (47) | T | 89.3/55.8 |
| R353 | 7030009591 | S.RES ERA3YED 472V (4.7K) | T | 89.3/54.5 |
| R354 | 7030009591 | S.RES ERA3YED 472V (4.7K) | T | 89.3/50.4 |
| R355 | 7030009591 | S.RES ERA3YED 472V (4.7K) | T | 89.3/53.2 |
| R356 | 7030003320 | S.RES ERJ3GEYJ 101 V (100) | T | 89.3/57.1 |
| R357 | 7310005580 | S.TRI TMC3ADCS3X (4.7K) | T | 93.6/52.7 |
| R358 | 7030010980 | S.RES ERA3YHD 470V (47) | T | 94.9/56.4 |
| R359 | 7030003320 | S.RES ERJ3GEYJ 101 V (100) | T | 94.9/59 |
| R360 | 7030003320 | S.RES ERJ3GEYJ 101 V (100) | B | 92.6/63.9 |
| R361 | 7030003490 | S.RES ERJ3GEYJ 272 V (2.7K) | B | 89.2/62.1 |
| R362 | 7030003510 | S.RES ERJ3GEYJ 392 V (3.9K) | B | 92.6/60.3 |
| R363 | 7030003320 | S.RES ERJ3GEYJ 101 V (100) | B | 92.6/65.7 |
| R364 | 7030003410 | S.RES ERJ3GEYJ 561 V (560) | T | 94.9/82.9 |
| R365 | 7030007860 | S.RES ERJ3GEYJ 8R2V (8.2) | T | 92/83.4 |
| R366 | 7030003410 | S.RES ERJ3GEYJ 561 V (560) | T | 94.9/84.2 |
| R368 | 7030005321 | S.RES ERA3YED 103V (10K) | T | 86.1/59.6 |
| R369 | 7030008240 | S.RES ERJ12Y0R00U | B | 95.3/57.1 |
| R421 | 7030007230 | S.RES ERA3YED 102V (1K) | T | 92.1/87.8 |
| R422 | 7030007230 | S.RES ERA3YED 102V (1K) | T | 89.3/87.8 |
| R423 | 7030007230 | S.RES ERA3YED 102V (1K) | T | 92.1/89.1 |
| R424 | 7030007230 | S.RES ERA3YED 102V (1K) | T | 89.3/89.1 |
| R425 | 7030003410 | S.RES ERJ3GEYJ 561 V (560) | T | 90.1/81.6 |
| R426 | 7030003410 | S.RES ERJ3GEYJ 561 V (560) | T | 91.5/93.3 |
| R427 | 7030003320 | S.RES ERJ3GEYJ 101 V (100) | B | 86.8/87.3 |
| R428 | 7030009861 | S.RES ERA3YED 471V (470) | B | 92.1/88 |
| R429 | 7030009861 | S.RES ERA3YED 471V (470) | B | 89.3/88 |
| R441 | 7030003440 | S.RES ERJ3GEYJ 102 V (1K) [USA] | T | 92.1/75.5 |
| | 7030003440 | S.RES ERJ3GEYJ 102 V (1K) [EUR] | | |
| | 7030003440 | S.RES ERJ3GEYJ 102 V (1K) [FRA] | | |
| | 7030003440 | S.RES ERJ3GEYJ 102 V (1K) [DEN] | | |
| | 7030003440 | S.RES ERJ3GEYJ 102 V (1K) [ITR] | | |
| | 7030003440 | S.RES ERJ3GEYJ 102 V (1K) [KOR] | | |
| | 7030003440 | S.RES ERJ3GEYJ 102 V (1K) [ESP] | | |
| | 7030003440 | S.RES ERJ3GEYJ 102 V (1K) [AUS] | | |
| | 7030003440 | S.RES ERJ3GEYJ 102 V (1K) [UK] | | |
| | 7030003440 | S.RES ERJ3GEYJ 102 V (1K) [RX] | | |
| | 7030007230 | S.RES ERA3YED 102V (1K) [CHN] | | |
| R442 | 7030005321 | S.RES ERA3YED 103V (10K) | T | 88.9/70.9 |
| R443 | 7030003440 | S.RES ERJ3GEYJ 102 V (1K) [USA] | T | 88.9/72.2 |
| | 7030003440 | S.RES ERJ3GEYJ 102 V (1K) [EUR] | | |
| | 7030003440 | S.RES ERJ3GEYJ 102 V (1K) [FRA] | | |
| | 7030003440 | S.RES ERJ3GEYJ 102 V (1K) [DEN] | | |
| | 7030003440 | S.RES ERJ3GEYJ 102 V (1K) [ITR] | | |
| | 7030003440 | S.RES ERJ3GEYJ 102 V (1K) [KOR] | | |
| | 7030003440 | S.RES ERJ3GEYJ 102 V (1K) [ESP] | | |
| | 7030003440 | S.RES ERJ3GEYJ 102 V (1K) [AUS] | | |
| | 7030003440 | S.RES ERJ3GEYJ 102 V (1K) [UK] | | |
| | 7030003440 | S.RES ERJ3GEYJ 102 V (1K) [RX] | | |
| | 7030007230 | S.RES ERA3YED 102V (1K) [CHN] | | |
| R501 | 7030003360 | S.RES ERJ3GEYJ 221 V (220) | T | 29.2/153.1 |
| R502 | 7030007230 | S.RES ERA3YED 102V (1K) | T | 27.9/153.1 |
| R503 | 7030007230 | S.RES ERA3YED 102V (1K) | T | 26.5/153.1 |
| R504 | 7030007230 | S.RES ERA3YED 102V (1K) | T | 25.2/153.1 |
| R506 | 7030003800 | S.RES ERJ3GEYJ 105 V (1M) | T | 34/154.5 |
| R507 | 7030003860 | S.RES ERJ3GE JPW V | B | 50.8/127 |
| R509 | 7030007230 | S.RES ERA3YED 102V (1K) | T | 42.5/136 |
| R510 | 7030007220 | S.RES ERA3YED 202V (2K) | T | 14.6/153.6 |
| R511 | 7030007220 | S.RES ERA3YED 202V (2K) | T | 17.2/153.6 |
| R512 | 7030007220 | S.RES ERA3YED 202V (2K) | T | 17.2/152.3 |
| R513 | 7030007220 | S.RES ERA3YED 202V (2K) | T | 17.2/151 |
| R514 | 7030007220 | S.RES ERA3YED 202V (2K) | T | 17.2/149.7 |
| R515 | 7030007220 | S.RES ERA3YED 202V (2K) | T | 17.2/148.3 |
| R516 | 7030007220 | S.RES ERA3YED 202V (2K) | T | 17.2/147 |
| R517 | 7030007220 | S.RES ERA3YED 202V (2K) | T | 17.2/145.7 |
| R518 | 7030007200 | S.RES ERA3YEB 202V (2K) | T | 17.2/144.4 |
| R519 | 7030007200 | S.RES ERA3YEB 202V (2K) | T | 17.2/142.7 |
| R520 | 7030007200 | S.RES ERA3YEB 202V (2K) | T | 17.2/141.4 |
| R521 | 7030007200 | S.RES ERA3YEB 202V (2K) | T | 17.2/140.1 |
| R522 | 7030007200 | S.RES ERA3YEB 202V (2K) | T | 17.2/138.8 |
| R523 | 7030007230 | S.RES ERA3YED 102V (1K) | T | 14.6/152.3 |
| R524 | 7030007230 | S.RES ERA3YED 102V (1K) | T | 14.6/151 |
| R525 | 7030007230 | S.RES ERA3YED 102V (1K) | T | 14.6/149.7 |
| R526 | 7030007230 | S.RES ERA3YED 102V (1K) | T | 14.6/148.3 |
| R527 | 7030007230 | S.RES ERA3YED 102V (1K) | T | 14.6/147 |
| R528 | 7030007230 | S.RES ERA3YED 102V (1K) | T | 14.6/145.7 |
| R529 | 7030007210 | S.RES ERA3YEB 102V (1K) | T | 14.6/144.4 |
| R530 | 7030007210 | S.RES ERA3YEB 102V (1K) | T | 14.6/142.7 |
| R531 | 7030007210 | S.RES ERA3YEB 102V (1K) | T | 14.6/141.4 |
| R532 | 7030007210 | S.RES ERA3YEB 102V (1K) | T | 14.6/140.1 |
| R533 | 7030007210 | S.RES ERA3YEB 102V (1K) | T | 14.6/138.8 |

M.=Mounted side (T: Mounted on the Top side, B: Mounted on the Bottom side)
S.=Surface mount

## [RXPLL-A UNIT]

| REF NO. | PARTS NO. | DESCRIPTION | | M. | H/V LOCATION |
|---|---|---|---|---|---|
| R534 | 7030003860 | S.RES ERJ3GE JPW V | | T | 22.2/127.6 |
| R535 | 7030003800 | S.RES ERJ3GEYJ 105 V (1M) | | T | 24.8/129.8 |
| R536 | 7030003200 | S.RES ERJ3GEYJ 100 V (10) | | T | 28/128.3 |
| R537 | 7030007230 | S.RES ERA3YED 102V (1K) | | T | 30.3/131.9 |
| R538 | 7030003360 | S.RES ERJ3GEYJ 221 V (220) | | B | 34.8/146.5 |
| R540 | 7030007230 | S.RES ERA3YED 102V (1K) | | B | 52.3/142.8 |
| R544 | 7030005871 | S.RES ERA3YKD 104V (100K) | | T | 69.4/140.4 |
| R545 | 7030005871 | S.RES ERA3YKD 104V (100K) | | T | 69.4/139.1 |
| R546 | 7030009861 | S.RES ERA3YED 471V (470) | | T | 67.4/150.7 |
| R548 | 7030009591 | S.RES ERA3YED 472V (4.7K) | | B | 43.4/136.5 |
| R550 | 7030009691 | S.RES ERA3YED 101V (100) | | B | 43.4/134.7 |
| R554 | 7030009891 | S.RES ERA3YED 151V (150) | | B | 47.2/133.9 |
| R555 | 7030003380 | S.RES ERJ3GEYJ 331 V (330) | | B | 61.9/142.1 |
| R556 | 7030005981 | S.RES ERA3YED 333V (33K) | | B | 44.2/128.2 |
| R561 | 7030003200 | S.RES ERJ3GEYJ 100 V (10) | | T | 71.3/148.5 |
| R562 | 7030003360 | S.RES ERJ3GEYJ 221 V (220) | | T | 65.7/155.5 |
| R563 | 7030003490 | S.RES ERJ3GEYJ 272 V (2.7K) | | T | 70.4/151.9 |
| R564 | 7030003510 | S.RES ERJ3GEYJ 392 V (3.9K) | | T | 70.4/150.6 |
| R565 | 7030003360 | S.RES ERJ3GEYJ 221 V (220) | | T | 67/155.5 |
| R570 | 7030003230 | S.RES ERJ3GEYJ 180 V (18) | | T | 63.1/155.5 |
| R571 | 7030003230 | S.RES ERJ3GEYJ 180 V (18) | | T | 58.5/155 |
| R572 | 7030003290 | S.RES ERJ3GEYJ 560 V (56) | | B | 57.2/156.3 |
| R573 | 7030009841 | S.RES ERA3YHD 330V (33) | | T | 61.8/155.5 |
| R574 | 7030003300 | S.RES ERJ3GEYJ 680 V (68) | | T | 60.5/155.5 |
| R575 | 7030003220 | S.RES ERJ3GEYJ 150 V (15) | | T | 58.5/156.3 |
| R580 | 7030009861 | S.RES ERA3YED 471V (470) | | T | 41.9/153.7 |
| R581 | 7030003360 | S.RES ERJ3GEYJ 221 V (220) | | T | 41.9/145.5 |
| R582 | 7030003600 | S.RES ERJ3GEYJ 223 V (22K) | | T | 41.9/149.5 |
| R587 | 7030003370 | S.RES ERJ3GEYJ 271 V (270) | [USA] | T | 55.7/157.6 |
| | 7030003370 | S.RES ERJ3GEYJ 271 V (270) | [EUR] | | |
| | 7030003370 | S.RES ERJ3GEYJ 271 V (270) | [FRA] | | |
| | 7030003370 | S.RES ERJ3GEYJ 271 V (270) | [DEN] | | |
| | 7030003370 | S.RES ERJ3GEYJ 271 V (270) | [ITR] | | |
| | 7030003370 | S.RES ERJ3GEYJ 271 V (270) | [KOR] | | |
| | 7030003370 | S.RES ERJ3GEYJ 271 V (270) | [ESP] | | |
| | 7030003370 | S.RES ERJ3GEYJ 271 V (270) | [AUS] | | |
| | 7030003370 | S.RES ERJ3GEYJ 271 V (270) | [UK] | | |
| | 7030003370 | S.RES ERJ3GEYJ 271 V (270) | [RX] | | |
| | 7030009851 | S.RES ERA3YED 271V (270) | [CHN] | | |
| R588 | 7030003230 | S.RES ERJ3GEYJ 180 V (18) | | T | 58.5/158.9 |
| R589 | 7030003370 | S.RES ERJ3GEYJ 271 V (270) | [USA] | T | 55.7/158.9 |
| | 7030003370 | S.RES ERJ3GEYJ 271 V (270) | [EUR] | | |
| | 7030003370 | S.RES ERJ3GEYJ 271 V (270) | [FRA] | | |
| | 7030003370 | S.RES ERJ3GEYJ 271 V (270) | [DEN] | | |
| | 7030003370 | S.RES ERJ3GEYJ 271 V (270) | [ITR] | | |
| | 7030003370 | S.RES ERJ3GEYJ 271 V (270) | [KOR] | | |
| | 7030003370 | S.RES ERJ3GEYJ 271 V (270) | [ESP] | | |
| | 7030003370 | S.RES ERJ3GEYJ 271 V (270) | [AUS] | | |
| | 7030003370 | S.RES ERJ3GEYJ 271 V (270) | [UK] | | |
| | 7030003370 | S.RES ERJ3GEYJ 271 V (270) | [RX] | | |
| | 7030009851 | S.RES ERA3YED 271V (270) | [CHN] | | |
| R591 | 7030003320 | S.RES ERJ3GEYJ 101 V (100) | | T | 58.2/169.9 |
| R592 | 7030005321 | S.RES ERA3YED 103V (10K) | | T | 58.5/167.9 |
| R593 | 7030003480 | S.RES ERJ3GEYJ 222 V (2.2K) | | T | 58.5/165.1 |
| R594 | 7030003320 | S.RES ERJ3GEYJ 101 V (100) | | B | 61.9/168.1 |
| R595 | 7030003640 | S.RES ERJ3GEYJ 473 V (47K) | | B | 55.9/165.3 |
| R596 | 7030003540 | S.RES ERJ3GEYJ 682 V (6.8K) | | B | 54.7/168.9 |
| R603 | 7030003480 | S.RES ERJ3GEYJ 222 V (2.2K) | | T | 56.3/110.9 |
| R604 | 7030007230 | S.RES ERA3YED 102V (1K) | | B | 53.4/115.8 |
| R605 | 7030003320 | S.RES ERJ3GEYJ 101 V (100) | | T | 46.8/113.4 |
| R651 | 7030007230 | S.RES ERA3YED 102V (1K) | | B | 23.5/177.1 |
| R652 | 7030003360 | S.RES ERJ3GEYJ 221 V (220) | | T | 13.5/170.8 |
| R653 | 7030007230 | S.RES ERA3YED 102V (1K) | | T | 13.5/169.5 |
| R654 | 7030007230 | S.RES ERA3YED 102V (1K) | | T | 13.5/168.2 |
| R656 | 7030003800 | S.RES ERJ3GEYJ 105 V (1M) | | T | 15/161.4 |
| R657 | 7030003320 | S.RES ERJ3GEYJ 101 V (100) | | T | 20.2/161.4 |
| R661 | 7030007220 | S.RES ERA3YED 202V (2K) | | T | 31.7/162.8 |
| R662 | 7030007220 | S.RES ERA3YED 202V (2K) | | T | 31.7/164.1 |
| R663 | 7030007220 | S.RES ERA3YED 202V (2K) | | T | 31.7/165.4 |
| R664 | 7030007220 | S.RES ERA3YED 202V (2K) | | T | 31.7/166.7 |
| R665 | 7030007220 | S.RES ERA3YED 202V (2K) | | T | 31.7/168 |
| R666 | 7030007220 | S.RES ERA3YED 202V (2K) | | T | 31.7/170.6 |
| R667 | 7030007220 | S.RES ERA3YED 202V (2K) | | T | 31.7/171.9 |
| R668 | 7030007220 | S.RES ERA3YED 202V (2K) | | T | 31.7/173.2 |
| R669 | 7030007200 | S.RES ERA3YEB 202V (2K) | | T | 31.7/174.5 |
| R670 | 7030007200 | S.RES ERA3YEB 202V (2K) | | T | 31.7/175.8 |
| R671 | 7030007200 | S.RES ERA3YEB 202V (2K) | | T | 31.7/177.1 |
| R673 | 7030007230 | S.RES ERA3YED 102V (1K) | | T | 34.3/165.4 |
| R674 | 7030007230 | S.RES ERA3YED 102V (1K) | | T | 34.3/166.7 |
| R675 | 7030007230 | S.RES ERA3YED 102V (1K) | | T | 34.3/168 |
| R676 | 7030007230 | S.RES ERA3YED 102V (1K) | | T | 34.3/169.3 |
| R677 | 7030007230 | S.RES ERA3YED 102V (1K) | | T | 34.3/170.6 |
| R678 | 7030007230 | S.RES ERA3YED 102V (1K) | | T | 34.3/171.9 |
| R679 | 7030007210 | S.RES ERA3YEB 102V (1K) | | T | 34.3/173.2 |
| R680 | 7030007210 | S.RES ERA3YEB 102V (1K) | | T | 34.3/174.5 |
| R681 | 7030007210 | S.RES ERA3YEB 102V (1K) | | T | 34.3/175.8 |
| R682 | 7030003860 | S.RES ERJ3GE JPW V | | B | 58.4/166 |
| R685 | 7030003460 | S.RES ERJ3GEYJ 152 V (1.5K) | | T | 38.4/169.7 |
| R686 | 7030003320 | S.RES ERJ3GEYJ 101 V (100) | | T | 40.3/163.4 |
| R687 | 7030003470 | S.RES ERJ3GEYJ 182 V (1.8K) | | T | 37.4/165.1 |
| R688 | 7030003480 | S.RES ERJ3GEYJ 222 V (2.2K) | | T | 34.3/162.8 |
| R689 | 7030003360 | S.RES ERJ3GEYJ 221 V (220) | | T | 33.6/161.5 |
| R690 | 7030003370 | S.RES ERJ3GEYJ 271 V (270) | [USA] | T | 46.4/165.3 |
| | 7030003370 | S.RES ERJ3GEYJ 271 V (270) | [EUR] | | |
| | 7030003370 | S.RES ERJ3GEYJ 271 V (270) | [FRA] | | |
| | 7030003370 | S.RES ERJ3GEYJ 271 V (270) | [DEN] | | |
| | 7030003370 | S.RES ERJ3GEYJ 271 V (270) | [ITR] | | |
| | 7030003370 | S.RES ERJ3GEYJ 271 V (270) | [KOR] | | |
| | 7030003370 | S.RES ERJ3GEYJ 271 V (270) | [ESP] | | |
| | 7030003370 | S.RES ERJ3GEYJ 271 V (270) | [AUS] | | |
| | 7030003370 | S.RES ERJ3GEYJ 271 V (270) | [UK] | | |
| | 7030003370 | S.RES ERJ3GEYJ 271 V (270) | [RX] | | |
| | 7030009851 | S.RES ERA3YED 271V (270) | [CHN] | | |
| R691 | 7030003230 | S.RES ERJ3GEYJ 180 V (18) | | T | 48.4/164.8 |

## [RXPLL-A UNIT]

| REF NO. | PARTS NO. | DESCRIPTION | | M. | H/V LOCATION |
|---|---|---|---|---|---|
| R692 | 7030003370 | S.RES ERJ3GEYJ 271 V (270) | [USA] | T | 46.4/166.6 |
| | 7030003370 | S.RES ERJ3GEYJ 271 V (270) | [EUR] | | |
| | 7030003370 | S.RES ERJ3GEYJ 271 V (270) | [FRA] | | |
| | 7030003370 | S.RES ERJ3GEYJ 271 V (270) | [DEN] | | |
| | 7030003370 | S.RES ERJ3GEYJ 271 V (270) | [ITR] | | |
| | 7030003370 | S.RES ERJ3GEYJ 271 V (270) | [KOR] | | |
| | 7030003370 | S.RES ERJ3GEYJ 271 V (270) | [ESP] | | |
| | 7030003370 | S.RES ERJ3GEYJ 271 V (270) | [AUS] | | |
| | 7030003370 | S.RES ERJ3GEYJ 271 V (270) | [UK] | | |
| | 7030003370 | S.RES ERJ3GEYJ 271 V (270) | [RX] | | |
| | 7030009851 | S.RES ERA3YED 271V (270) | [CHN] | | |
| R693 | 7030003500 | S.RES ERJ3GEYJ 332 V (3.3K) | | T | 37.1/169.7 |
| R704 | 7030009841 | S.RES ERA3YHD 330V (33) | | T | 30.8/113.7 |
| R705 | 7030003600 | S.RES ERJ3GEYJ 223 V (22K) | | T | 29.5/113.7 |
| R706 | 7030005321 | S.RES ERA3YED 103V (10K) | | T | 28.2/113.7 |
| R707 | 7030009861 | S.RES ERA3YED 471V (470) | | T | 30.8/108.1 |
| R708 | 7030003410 | S.RES ERJ3GEYJ 561 V (560) | | T | 43.3/118.8 |
| R709 | 7030007860 | S.RES ERJ3GEYJ 8R2V (8.2) | | T | 43.3/116 |
| R710 | 7030003410 | S.RES ERJ3GEYJ 561 V (560) | | T | 43.8/121.1 |
| R711 | 7030003320 | S.RES ERJ3GEYJ 101 V (100) | | T | 37.9/154.5 |
| R802 | 7030009861 | S.RES ERA3YED 471V (470) | | T | 78.3/147.3 |
| R803 | 7030005321 | S.RES ERA3YED 103V (10K) | | T | 79.6/147.3 |
| R804 | 7030003320 | S.RES ERJ3GEYJ 101 V (100) | | T | 80.4/149.5 |
| R805 | 7030003370 | S.RES ERJ3GEYJ 271 V (270) | [USA] | T | 81.5/158.7 |
| | 7030003370 | S.RES ERJ3GEYJ 271 V (270) | [EUR] | | |
| | 7030003370 | S.RES ERJ3GEYJ 271 V (270) | [FRA] | | |
| | 7030003370 | S.RES ERJ3GEYJ 271 V (270) | [DEN] | | |
| | 7030003370 | S.RES ERJ3GEYJ 271 V (270) | [ITR] | | |
| | 7030003370 | S.RES ERJ3GEYJ 271 V (270) | [KOR] | | |
| | 7030003370 | S.RES ERJ3GEYJ 271 V (270) | [ESP] | | |
| | 7030003370 | S.RES ERJ3GEYJ 271 V (270) | [AUS] | | |
| | 7030003370 | S.RES ERJ3GEYJ 271 V (270) | [UK] | | |
| | 7030003370 | S.RES ERJ3GEYJ 271 V (270) | [RX] | | |
| | 7030009851 | S.RES ERA3YED 271V (270) | [CHN] | | |
| R806 | 7030003230 | S.RES ERJ3GEYJ 180 V (18) | | T | 84.3/158.7 |
| R807 | 7030003370 | S.RES ERJ3GEYJ 271 V (270) | [USA] | T | 87.1/158.7 |
| | 7030003370 | S.RES ERJ3GEYJ 271 V (270) | [EUR] | | |
| | 7030003370 | S.RES ERJ3GEYJ 271 V (270) | [FRA] | | |
| | 7030003370 | S.RES ERJ3GEYJ 271 V (270) | [DEN] | | |
| | 7030003370 | S.RES ERJ3GEYJ 271 V (270) | [ITR] | | |
| | 7030003370 | S.RES ERJ3GEYJ 271 V (270) | [KOR] | | |
| | 7030003370 | S.RES ERJ3GEYJ 271 V (270) | [ESP] | | |
| | 7030003370 | S.RES ERJ3GEYJ 271 V (270) | [AUS] | | |
| | 7030003370 | S.RES ERJ3GEYJ 271 V (270) | [UK] | | |
| | 7030003370 | S.RES ERJ3GEYJ 271 V (270) | [RX] | | |
| | 7030009851 | S.RES ERA3YED 271V (270) | [CHN] | | |
| R812 | 7030007230 | S.RES ERA3YED 102V (1K) | | T | 73.9/177.6 |
| R814 | 7030005321 | S.RES ERA3YED 103V (10K) | | T | 75.2/177.6 |
| R815 | 7030003320 | S.RES ERJ3GEYJ 101 V (100) | | T | 79.6/173.6 |
| R831 | 7030003320 | S.RES ERJ3GEYJ 101 V (100) | | B | 85.6/180 |
| R832 | 7030003300 | S.RES ERJ3GEYJ 680 V (68) | | B | 88.5/177.2 |
| R833 | 7030003320 | S.RES ERJ3GEYJ 101 V (100) | | B | 89.3/174.6 |
| R834 | 7030003380 | S.RES ERJ3GEYJ 331 V (330) | | T | 91.6/155.7 |
| R835 | 7030003320 | S.RES ERJ3GEYJ 101 V (100) | | T | 94.4/155.7 |
| R836 | 7030003380 | S.RES ERJ3GEYJ 331 V (330) | | T | 88.8/145.4 |
| R837 | 7030003220 | S.RES ERJ3GEYJ 150 V (15) | | T | 91.6/145.4 |
| R838 | 7030003380 | S.RES ERJ3GEYJ 331 V (330) | | T | 94.4/145.4 |
| R839 | 7030005321 | S.RES ERA3YED 103V (10K) | | B | 77.9/171 |
| R840 | 7030003540 | S.RES ERJ3GEYJ 682 V (6.8K) | | B | 74.5/165.7 |
| R1000 | 7030003320 | S.RES ERJ3GEYJ 101 V (100) | | B | 177.1/11.2 |
| R1001 | 7030003640 | S.RES ERJ3GEYJ 473 V (47K) | | T | 182.8/63.5 |
| R1002 | 7030003480 | S.RES ERJ3GEYJ 222 V (2.2K) | | T | 183.5/65.7 |
| R1003 | 7030010980 | S.RES ERA3YHD 470V (47) | | T | 162/13.4 |
| R1004 | 7030007230 | S.RES ERA3YED 102V (1K) | | B | 166.4/12.9 |
| R1005 | 7030003550 | S.RES ERJ3GEYJ 822 V (8.2K) | | T | 144/26.1 |
| R1006 | 7030007230 | S.RES ERA3YED 102V (1K) | | T | 145.3/26.1 |
| R1007 | 7030004030 | S.RES ERJ3GEYJ 5R6 V (5.6) | | B | 153.7/33.6 |
| R1008 | 7030003240 | S.RES ERJ3GEYJ 220 V (22) | | T | 144/36.4 |
| R1009 | 7030010980 | S.RES ERA3YHD 470V (47) | | T | 182.4/29.3 |
| R1010 | 7030010980 | S.RES ERA3YHD 470V (47) | | T | 154.5/33.2 |
| R1013 | 7030007230 | S.RES ERA3YED 102V (1K) | | B | 172.7/40.8 |
| R1014 | 7030007230 | S.RES ERA3YED 102V (1K) | | B | 156.7/40.8 |
| R1015 | 7030003530 | S.RES ERJ3GEYJ 562 V (5.6K) | | B | 172.7/45.4 |
| R1016 | 7030003530 | S.RES ERJ3GEYJ 562 V (5.6K) | | B | 156.7/45.4 |
| R1017 | 7030003530 | S.RES ERJ3GEYJ 562 V (5.6K) | | B | 169.7/12.9 |
| R1018 | 7030003650 | S.RES ERJ3GEYJ 563 V (56K) | | B | 181.1/62.4 |
| R1019 | 7030005321 | S.RES ERA3YED 103V (10K) | | B | 181.9/65 |
| R1020 | 7030003390 | S.RES ERJ3GEYJ 391 V (390) | | T | 179.6/18.3 |
| R1021 | 7030003220 | S.RES ERJ3GEYJ 150 V (15) | | T | 177/19.4 |
| R1022 | 7030003390 | S.RES ERJ3GEYJ 391 V (390) | | T | 180.9/19.4 |
| R1023 | 7030010980 | S.RES ERA3YHD 470V (47) | | B | 149.3/33.5 |
| R1024 | 7030003200 | S.RES ERJ3GEYJ 100 V (10) | | B | 150.1/31.4 |
| R1025 | 7030003300 | S.RES ERJ3GEYJ 680 V (68) | | T | 178.3/19.4 |
| R1026 | 7030003480 | S.RES ERJ3GEYJ 222 V (2.2K) | | B | 171.2/14.2 |
| R1027 | 7030003200 | S.RES ERJ3GEYJ 100 V (10) | | B | 176.5/38.3 |
| R1028 | 7030003200 | S.RES ERJ3GEYJ 100 V (10) | | B | 160.5/38.3 |
| R1029 | 7030010980 | S.RES ERA3YHD 470V (47) | | B | 178.2/46.1 |
| R1030 | 7030010980 | S.RES ERA3YHD 470V (47) | | B | 162.2/46.1 |
| R1051 | 7030003800 | S.RES ERJ3GEYJ 105 V (1M) | | T | 178.6/93.1 |
| R1054 | 7030011500 | S.RES ERA3YHD 270V (27) | | T | 149.1/83.2 |
| R1055 | 7030000010 | S.RES MCR10EZHJ JPW (000) | | T | 162.1/76.6 |
| R1056 | 7030000010 | S.RES MCR10EZHJ JPW (000) | | T | 177.5/71.1 |
| R1071 | 7030010980 | S.RES ERA3YHD 470V (47) | | B | 165.9/76.4 |
| R1072 | 7030000010 | S.RES MCR10EZHJ JPW (000) | | T | 133.9/84.1 |
| R1073 | 7030000010 | S.RES MCR10EZHJ JPW (000) | | T | 135.5/85.7 |
| R1101 | 7310004860 | S.TRI EVM-3YSX50 B53 (502) | | T | 180.1/90.2 |
| R1102 | 7030005871 | S.RES ERA3YKD 104V (100K) | | B | 180.2/100.6 |
| R1103 | 7030007680 | S.RES ERJ8ENF 47R0V (47) | | T | 181.7/104.7 |
| R1104 | 7030007680 | S.RES ERJ8ENF 47R0V (47) | | T | 173.6/107.2 |
| R1105 | 7030003500 | S.RES ERJ3GEYJ 332 V (3.3K) | | T | 176.7/87.7 |
| R1106 | 7030009620 | S.RES ERJ12YJ120U (12) | | B | 179.6/117.9 |
| R1107 | 7030010980 | S.RES ERA3YHD 470V (47) | | T | 175.6/120.3 |
| R1109 | 7030007180 | S.RES ERJ12YJ150U (15) | | B | 176.5/125.7 |
| R1110 | 7030003480 | S.RES ERJ3GEYJ 222 V (2.2K) | | B | 168.5/131.6 |
| R1111 | 7030003480 | S.RES ERJ3GEYJ 222 V (2.2K) | | T | 166.2/130.4 |

M.=Mounted side (T: Mounted on the Top side, B: Mounted on the Bottom side)
S.=Surface mount

## [RXPLL-A UNIT]

| REF NO. | PARTS NO. | DESCRIPTION | M. | H/V LOCATION |
|---|---|---|---|---|
| R1113 | 7030003480 | S.RES ERJ3GEYJ 222 V (2.2K) | T | 166.2/131.7 |
| R1114 | 7030004040 | S.RES ERJ3GEYJ 4R7 V (4.7) | T | 179.2/125.3 |
| R1115 | 7030006240 | S.RES ERJ12YJ181U (180) | B | 176.5/129.9 |
| R1116 | 7030007230 | S.RES ERA3YED 102V (1K) | T | 175.7/135.3 |
| R1117 | 7030004040 | S.RES ERJ3GEYJ 4R7 V (4.7) | T | 175.7/134 |
| R1118 | 7030003480 | S.RES ERJ3GEYJ 222 V (2.2K) | T | 175.4/132 |
| R1119 | 7030003470 | S.RES ERJ3GEYJ 182 V (1.8K) | T | 178/132 |
| R1120 | 7030006070 | S.RES ERJ12YJ101U (100) | B | 177.3/141 |
| R1121 | 7030003240 | S.RES ERJ3GEYJ 220 V (22) | T | 178.6/139.6 |
| R1122 | 7030010980 | S.RES ERA3YHD 470V (47) | T | 171.9/131.1 |
| R1123 | 7030003480 | S.RES ERJ3GEYJ 222 V (2.2K) | T | 165.7/137.4 |
| R1124 | 7030003460 | S.RES ERJ3GEYJ 152 V (1.5K) | T | 165.7/140 |
| R1125 | 7030003420 | S.RES ERJ3GEYJ 681 V (680) | B | 171/142.2 |
| R1126 | 7030003200 | S.RES ERJ3GEYJ 100 V (10) | T | 168.4/142.2 |
| R1127 | 7030010980 | S.RES ERA3YHD 470V (47) | T | 174.6/142.9 |
| R1128 | 7030003470 | S.RES ERJ3GEYJ 182 V (1.8K) | T | 174.6/146.6 |
| R1129 | 7030003470 | S.RES ERJ3GEYJ 182 V (1.8K) | T | 174.6/148.4 |
| R1130 | 7030003480 | S.RES ERJ3GEYJ 222 V (2.2K) | T | 180.6/146.4 |
| R1131 | 7030003640 | S.RES ERJ3GEYJ 473 V (47K) | B | 177.4/90.7 |
| R1132 | 7310004860 | S.TRI EVM-3YSX50 B53 (502) | T | 179.4/84.3 |
| R1133 | 7030003500 | S.RES ERJ3GEYJ 332 V (3.3K) | T | 175.5/82.5 |
| R1134 | 7030003640 | S.RES ERJ3GEYJ 473 V (47K) | T | 175.5/83.8 |
| R1135 | 7030005871 | S.RES ERA3YKD 104V (100K) | T | 182.2/97.8 |
| R1151 | 7030003280 | S.RES ERJ3GEYJ 470 V (47) | T | 134.8/63.9 |
| R1152 | 7030003280 | S.RES ERJ3GEYJ 470 V (47) | B | 117.2/56.3 |
| R1203 | 7030000010 | S.RES MCR10EZHJ JPW (000) | T | 157.5/74.9 |
| R1208 | 7030003480 | S.RES ERJ3GEYJ 222 V (2.2K) | T | 138.3/53.9 |
| R1209 | 7030005321 | S.RES ERA3YED 103V (10K) | T | 139.1/51.9 |
| R1210 | 7030003650 | S.RES ERJ3GEYJ 563 V (56K) | B | 142.5/44.3 |
| R1211 | 7030003860 | S.RES ERJ3GE JPW V | T | 117.6/7.8 |
| R1212 | 7030003860 | S.RES ERJ3GE JPW V | T | 124.8/51.1 |
| R1213 | 7030003200 | S.RES ERJ3GEYJ 100 V (10) | B | 118.8/25 |
| R1214 | 7030003200 | S.RES ERJ3GEYJ 100 V (10) | B | 109/25 |
| R1216 | 7030010980 | S.RES ERA3YHD 470V (47) | B | 120.7/31.6 |
| R1217 | 7030010980 | S.RES ERA3YHD 470V (47) | B | 111.2/31.6 |
| R1220 | 7030010980 | S.RES ERA3YHD 470V (47) | T | 118.7/17.3 |
| R1221 | 7030007230 | S.RES ERA3YED 102V (1K) | T | 116.4/39.9 |
| R1222 | 7030003530 | S.RES ERJ3GEYJ 562 V (5.6K) | T | 116.4/38.6 |
| R1223 | 7030010980 | S.RES ERA3YHD 470V (47) | T | 109.3/17.1 |
| R1224 | 7030007230 | S.RES ERA3YED 102V (1K) | T | 106.6/39.9 |
| R1225 | 7030003530 | S.RES ERJ3GEYJ 562 V (5.6K) | T | 106.6/38.6 |
| R1226 | 7030003410 | S.RES ERJ3GEYJ 561 V (560) | T | 158.9/92.9 |
| R1227 | 7030003410 | S.RES ERJ3GEYJ 561 V (560) | T | 154/92.9 |
| R1228 | 7310004860 | S.TRI EVM-3YSX50 B53 (502) | T | 156.4/92.9 |
| R1229 | 7030003480 | S.RES ERJ3GEYJ 222 V (2.2K) | B | 156.1/117.4 |
| R1230 | 7030003480 | S.RES ERJ3GEYJ 222 V (2.2K) | B | 156.1/119.2 |
| R1231 | 7030003480 | S.RES ERJ3GEYJ 222 V (2.2K) | B | 156.1/121 |
| R1232 | 7030003600 | S.RES ERJ3GEYJ 223 V (22K) | T | 156.3/97.5 |
| R1233 | 7030010980 | S.RES ERA3YHD 470V (47) | B | 152.5/109.4 |
| R1301 | 7030010980 | S.RES ERA3YHD 470V (47) | B | 155.7/97.5 |
| R1302 | 7030003860 | S.RES ERJ3GE JPW V | T | 159.3/116.8 |
| R1304 | 7030003620 | S.RES ERJ3GEYJ 333 V (33K) | T | 156.5/123.2 |
| R1306 | 7030006230 | S.RES ERJ12YJ151U (150) | B | 153.8/124.8 |
| R1307 | 7030003300 | S.RES ERJ3GEYJ 680 V (68) | T | 156.5/128.4 |
| R1311 | 7030000010 | S.RES MCR10EZHJ JPW (000) | T | 140.3/98.8 |
| R1312 | 7030000010 | S.RES MCR10EZHJ JPW (000) | T | 143.2/104.1 |
| R1313 | 7030000010 | S.RES MCR10EZHJ JPW (000) | T | 143.2/101.5 |
| R1357 | 7030007230 | S.RES ERA3YED 102V (1K) | B | 140.7/70.4 |
| R1358 | 7030003530 | S.RES ERJ3GEYJ 562 V (5.6K) | B | 142.8/70.4 |
| R1359 | 7030010980 | S.RES ERA3YHD 470V (47) | T | 139.4/64.7 |
| R1360 | 7030007230 | S.RES ERA3YED 102V (1K) | B | 146.4/67.1 |
| R1361 | 7030003380 | S.RES ERJ3GEYJ 331 V (330) | T | 139.3/68.8 |
| R1362 | 7030005871 | S.RES ERA3YKD 104V (100K) | B | 144.6/70.4 |
| R1401 | 7030003200 | S.RES ERJ3GEYJ 100 V (10) | T | 131.5/103.3 |
| R1402 | 7030003300 | S.RES ERJ3GEYJ 680 V (68) | T | 126.4/111 |
| R1403 | 7030007230 | S.RES ERA3YED 102V (1K) | T | 132/107.7 |
| R1404 | 7030009861 | S.RES ERA3YED 471V (470) | T | 134.6/104.3 |
| R1405 | 7030003340 | S.RES ERJ3GEYJ 151 V (150) | T | 137.2/104.3 |
| R1406 | 7030009591 | S.RES ERA3YED 472V (4.7K) | T | 135.2/106.2 |
| R1407 | 7030003550 | S.RES ERJ3GEYJ 822 V (8.2K) | B | 135.4/104.3 |
| R1408 | 7030003200 | S.RES ERJ3GEYJ 100 V (10) | T | 120.9/109 |
| R1409 | 7030009591 | S.RES ERA3YED 472V (4.7K) | T | 120.5/114.9 |
| R1410 | 7030006091 | S.RES ERA3YED 822V (8.2K) | B | 124.2/114.4 |
| R1411 | 7030005871 | S.RES ERA3YKD 104V (100K) | T | 123.2/116.2 |
| R1412 | 7030003200 | S.RES ERJ3GEYJ 100 V (10) | T | 126.4/112.3 |
| R1413 | 7030003200 | S.RES ERJ3GEYJ 100 V (10) | T | 126.4/113.6 |
| R1414 | 7030005871 | S.RES ERA3YKD 104V (100K) | B | 120.9/114.4 |
| R1415 | 7030010980 | S.RES ERA3YHD 470V (47) | T | 127/114.9 |
| R1416 | 7030003320 | S.RES ERJ3GEYJ 101 V (100) | B | 139.7/122.9 |
| R1417 | 7030000010 | S.RES MCR10EZHJ JPW (000) | B | 130.1/124.5 |
| R1418 | 7030000010 | S.RES MCR10EZHJ JPW (000) | B | 130.1/122.5 |
| R1419 | 7030003860 | S.RES ERJ3GE JPW V | B | 129.4/114.9 |
| R1501 | 7030010980 | S.RES ERA3YHD 470V (47) | T | 126.5/125.2 |
| R1502 | 7030009841 | S.RES ERA3YHD 330V (33) | T | 133/131 |
| R1503 | 7030009851 | S.RES ERA3YED 271V (270) | T | 130/146.3 |
| R1504 | 7030011050 | S.RES ERA3YHD 100V (10) | T | 131.3/143.5 |
| R1505 | 7030006091 | S.RES ERA3YED 822V (8.2K) | B | 137.7/140.3 |
| R1506 | 7030007230 | S.RES ERA3YED 102V (1K) | B | 137.7/147 |
| R1507 | 7030007230 | S.RES ERA3YED 102V (1K) | T | 132.6/146.3 |
| R1508 | 7030007230 | S.RES ERA3YED 102V (1K) | T | 133.9/146.3 |
| R1509 | 7030007230 | S.RES ERA3YED 102V (1K) | T | 139.1/158.9 |
| R1510 | 7030005321 | S.RES ERA3YED 103V (10K) | T | 139.1/157.6 |
| R1511 | 7030009861 | S.RES ERA3YED 471V (470) | T | 136.5/157.6 |
| R1512 | 7030003380 | S.RES ERJ3GEYJ 331 V (330) | T | 129.6/151.6 |
| R1513 | 7030003380 | S.RES ERJ3GEYJ 331 V (330) | T | 129.6/155.5 |
| R1514 | 7030005321 | S.RES ERA3YED 103V (10K) | T | 129.6/160.8 |
| R1515 | 7030005321 | S.RES ERA3YED 103V (10K) | T | 133.5/160.8 |
| R1516 | 7310005090 | S.TRI RH03ADC13X (1K) | T | 119.2/157.7 |
| R1517 | 7030005321 | S.RES ERA3YED 103V (10K) | T | 115.3/158 |
| R1518 | 7030005321 | S.RES ERA3YED 103V (10K) | T | 134.8/160.8 |
| R1519 | 7030005321 | S.RES ERA3YED 103V (10K) | T | 131.7/171.7 |
| R1520 | 7030005321 | S.RES ERA3YED 103V (10K) | T | 136.1/160.8 |
| R1521 | 7030010980 | S.RES ERA3YHD 470V (47) | T | 126.5/133 |
| R1522 | 7030009841 | S.RES ERA3YHD 330V (33) | T | 126/141.1 |
| R1523 | 7030009851 | S.RES ERA3YED 271V (270) | T | 123.7/146.3 |

## [RXPLL-A UNIT]

| REF NO. | PARTS NO. | DESCRIPTION | M. | H/V LOCATION |
|---|---|---|---|---|
| R1524 | 7030011050 | S.RES ERA3YHD 100V (10) | T | 122.4/143.5 |
| R1525 | 7030007230 | S.RES ERA3YED 102V (1K) | B | 128.8/147 |
| R1526 | 7030003460 | S.RES ERJ3GEYJ 152 V (1.5K) | B | 137.7/142.1 |
| R1527 | 7030007230 | S.RES ERA3YED 102V (1K) | T | 119.8/146.3 |
| R1528 | 7030007230 | S.RES ERA3YED 102V (1K) | T | 121.1/146.3 |
| R1529 | 7030007230 | S.RES ERA3YED 102V (1K) | T | 115.3/152.3 |
| R1530 | 7030003380 | S.RES ERJ3GEYJ 331 V (330) | T | 128/151.6 |
| R1531 | 7030003380 | S.RES ERJ3GEYJ 331 V (330) | T | 128/155.5 |
| R1532 | 7030005321 | S.RES ERA3YED 103V (10K) | T | 124.1/160.8 |
| R1533 | 7030005321 | S.RES ERA3YED 103V (10K) | T | 128/160.8 |
| R1534 | 7030005321 | S.RES ERA3YED 103V (10K) | T | 122.8/160.8 |
| R1535 | 7030005321 | S.RES ERA3YED 103V (10K) | T | 121.5/160.8 |
| R1536 | 7030005321 | S.RES ERA3YED 103V (10K) | T | 129/171.7 |
| R1537 | 7030003320 | S.RES ERJ3GEYJ 101 V (100) | T | 115.5/164.5 |
| R1538 | 7030003320 | S.RES ERJ3GEYJ 101 V (100) | T | 107.1/170.1 |
| R1539 | 7030008061 | S.RES ERA3YED 222V (2.2K) | B | 131.8/176.4 |
| R1540 | 7030010390 | S.RES ERA3YED 821V (820) | B | 128.7/177.1 |
| R1541 | 7030003320 | S.RES ERJ3GEYJ 101 V (100) | T | 107.1/178.8 |
| R1542 | 7030003320 | S.RES ERJ3GEYJ 101 V (100) | T | 115.5/173.2 |
| R1543 | 7030009691 | S.RES ERA3YED 101V (100) | B | 130.6/179 |
| R1651 | 7030003380 | S.RES ERJ3GEYJ 331 V (330) | B | 100.9/144.8 |
| R1652 | 7030003220 | S.RES ERJ3GEYJ 150 V (15) | B | 102.7/144.8 |
| R1653 | 7030003380 | S.RES ERJ3GEYJ 331 V (330) | B | 101.9/142.9 |
| R1654 | 7030010980 | S.RES ERA3YHD 470V (47) | B | 105.5/142.2 |
| R1655 | 7030009861 | S.RES ERA3YED 471V (470) | B | 108.8/140 |
| R1656 | 7030003630 | S.RES ERJ3GEYJ 393 V (39K) | B | 108.3/142.2 |
| R1657 | 7030005871 | S.RES ERA3YKD 104V (100K) | T | 108/133.1 |
| R1658 | 7030003320 | S.RES ERJ3GEYJ 101 V (100) | T | 110.6/133.1 |
| R1659 | 7030009691 | S.RES ERA3YED 101V (100) | T | 115.8/124.9 |
| R1660 | 7030009691 | S.RES ERA3YED 101V (100) | T | 115.8/128.7 |
| R1661 | 7030005321 | S.RES ERA3YED 103V (10K) | T | 135.1/175.4 |
| R1662 | 7030005321 | S.RES ERA3YED 103V (10K) | T | 135.2/172.8 |
| R1663 | 7030005321 | S.RES ERA3YED 103V (10K) | T | 144.3/175.4 |
| R1664 | 7030005321 | S.RES ERA3YED 103V (10K) | T | 139.9/172.1 |
| R1665 | 7030003320 | S.RES ERJ3GEYJ 101 V (100) | T | 109.3/133.1 |
| R1667 | 7030003360 | S.RES ERJ3GEYJ 221 V (220) | T | 139.2/170.2 |
| R1668 | 7030003360 | S.RES ERJ3GEYJ 221 V (220) | T | 141.8/170.2 |
| R1670 | 7030003800 | S.RES ERJ3GEYJ 105 V (1M) | T | 140.2/164.1 |
| R1673 | 7030007230 | S.RES ERA3YED 102V (1K) | B | 146/174.5 |
| R1674 | 7030003370 | S.RES ERJ3GEYJ 271 V (270) [USA] | B | 145.1/177.1 |
| | 7030003370 | S.RES ERJ3GEYJ 271 V (270) [EUR] | | |
| | 7030003370 | S.RES ERJ3GEYJ 271 V (270) [FRA] | | |
| | 7030003370 | S.RES ERJ3GEYJ 271 V (270) [DEN] | | |
| | 7030003370 | S.RES ERJ3GEYJ 271 V (270) [ITR] | | |
| | 7030003370 | S.RES ERJ3GEYJ 271 V (270) [KOR] | | |
| | 7030003370 | S.RES ERJ3GEYJ 271 V (270) [ESP] | | |
| | 7030003370 | S.RES ERJ3GEYJ 271 V (270) [AUS] | | |
| | 7030003370 | S.RES ERJ3GEYJ 271 V (270) [UK] | | |
| | 7030003370 | S.RES ERJ3GEYJ 271 V (270) [RX] | | |
| | 7030009851 | S.RES ERA3YED 271V (270) [CHN] | | |
| R1675 | 7030009591 | S.RES ERA3YED 472V (4.7K) | T | 136.6/170.2 |
| R1677 | 7030009591 | S.RES ERA3YED 472V (4.7K) | T | 143.1/170.2 |
| R1701 | 7030003360 | S.RES ERJ3GEYJ 221 V (220) | T | 162.4/147.4 |
| R1703 | 7030003360 | S.RES ERJ3GEYJ 221 V (220) | T | 159.8/147.4 |
| R1704 | 7030003360 | S.RES ERJ3GEYJ 221 V (220) | T | 158.5/147.4 |
| R1706 | 7030003360 | S.RES ERJ3GEYJ 221 V (220) | T | 155.9/147.4 |
| R1707 | 7030003360 | S.RES ERJ3GEYJ 221 V (220) | T | 154.6/147.4 |
| R1708 | 7030003360 | S.RES ERJ3GEYJ 221 V (220) | T | 153.3/147.4 |
| R1709 | 7030003480 | S.RES ERJ3GEYJ 222 V (2.2K) | T | 149.7/159.3 |
| R1710 | 7030003480 | S.RES ERJ3GEYJ 222 V (2.2K) | T | 148.4/159.3 |
| R1711 | 7030003540 | S.RES ERJ3GEYJ 682 V (6.8K) | T | 147.1/159.3 |
| R1712 | 7030003540 | S.RES ERJ3GEYJ 682 V (6.8K) | T | 145.8/159.3 |
| R1713 | 7030003660 | S.RES ERJ3GEYJ 683 V (68K) | T | 145.8/157.2 |
| R1714 | 7030003660 | S.RES ERJ3GEYJ 683 V (68K) | T | 145.8/155.9 |
| R1715 | 7030003540 | S.RES ERJ3GEYJ 682 V (6.8K) | T | 143.9/164.8 |
| R1716 | 7030007230 | S.RES ERA3YED 102V (1K) | T | 164.2/164.8 |
| R1717 | 7030007230 | S.RES ERA3YED 102V (1K) | T | 164.2/163.5 |
| R1718 | 7030007230 | S.RES ERA3YED 102V (1K) | T | 164.2/162.2 |
| R1719 | 7030003660 | S.RES ERJ3GEYJ 683 V (68K) | T | 144.3/166.8 |
| | | | | |
| C1 | 4030011600 | S.CER C1608 JB 1E 104K-T | T | 10.8/18.2 |
| C2 | 4030006880 | S.CER C1608 JB 1H 472K-T | T | 25.7/29.5 |
| C14 | 4030006880 | S.CER C1608 JB 1H 472K-T | T | 37.7/12.5 |
| C15 | 4030006880 | S.CER C1608 JB 1H 472K-T | T | 31.2/15.4 |
| C16 | 4030006880 | S.CER C1608 JB 1H 472K-T | T | 35.1/15.4 |
| C17 | 4030006880 | S.CER C1608 JB 1H 472K-T | T | 13.8/12.6 |
| C18 | 4030006880 | S.CER C1608 JB 1H 472K-T | T | 16.8/12.6 |
| C19 | 4030006880 | S.CER C1608 JB 1H 472K-T | T | 29.5/12.6 |
| C20 | 4030006880 | S.CER C1608 JB 1H 472K-T | T | 87.4/127.8 |
| C21 | 4030006880 | S.CER C1608 JB 1H 472K-T | T | 88.7/127.8 |
| C22 | 4030006880 | S.CER C1608 JB 1H 472K-T | T | 90/127.8 |
| C30 | 4030011600 | S.CER C1608 JB 1E 104K-T | T | 19.1/112.4 |
| C31 | 4030011600 | S.CER C1608 JB 1E 104K-T | T | 20.4/113.7 |
| C32 | 4030011600 | S.CER C1608 JB 1E 104K-T | T | 24.3/111.1 |
| C51 | 4510008520 | S.ELE EEE1CA470SP | T | 84/20.3 |
| C52 | 4030011600 | S.CER C1608 JB 1E 104K-T | T | 78.9/23.7 |
| C53 | 4030011600 | S.CER C1608 JB 1E 104K-T | T | 75.1/23.7 |
| C54 | 4510008500 | S.ELE EEE1CA101WP | T | 70/20.3 |
| C61 | 4510008520 | S.ELE EEE1CA470SP | T | 62.9/20.3 |
| C62 | 4030011600 | S.CER C1608 JB 1E 104K-T | B | 58.2/19.9 |
| C63 | 4030011600 | S.CER C1608 JB 1E 104K-T | B | 54.8/19.9 |
| C64 | 4510008500 | S.ELE EEE1CA101WP | T | 50.1/20.3 |
| C101 | 4030006880 | S.CER C1608 JB 1H 472K-T | T | 39.7/80.7 |
| C102 | 4030011600 | S.CER C1608 JB 1E 104K-T | T | 41.8/79.9 |
| C103 | 4510008540 | S.ELE EEE1CA100SR | T | 40.2/76.8 |
| C104 | 4030011600 | S.CER C1608 JB 1E 104K-T | T | 21.4/100.2 |
| C105 | 4030011600 | S.CER C1608 JB 1E 104K-T | T | 21.4/88.2 |
| C106 | 4030011600 | S.CER C1608 JB 1E 104K-T | T | 21.4/84.4 |
| C107 | 4030011600 | S.CER C1608 JB 1E 104K-T | T | 24.4/79.8 |
| C108 | 4030011600 | S.CER C1608 JB 1E 104K-T | T | 27/79.8 |
| C109 | 4030011600 | S.CER C1608 JB 1E 104K-T | T | 30.8/79.8 |
| C110 | 4030011600 | S.CER C1608 JB 1E 104K-T | T | 36.8/79.8 |
| C111 | 4030011600 | S.CER C1608 JB 1E 104K-T | T | 41.2/88.5 |
| C112 | 4030011600 | S.CER C1608 JB 1E 104K-T | T | 41.3/82.6 |

M.=Mounted side (T: Mounted on the Top side, B: Mounted on the Bottom side)
S.=Surface mount

## [RXPLL-A UNIT]

| REF NO. | PARTS NO. | DESCRIPTION | M. | H/V LOCATION |
|---|---|---|---|---|
| C114 | 4030011600 | S.CER C1608 JB 1E 104K-T | T | 39.5/98.4 |
| C115 | 4030011600 | S.CER C1608 JB 1E 104K-T | T | 38.1/98.4 |
| C116 | 4030011600 | S.CER C1608 JB 1E 104K-T | T | 35.3/99.6 |
| C117 | 4030011600 | S.CER C1608 JB 1E 104K-T | T | 23.3/98.8 |
| C118 | 4030011600 | S.CER C1608 JB 1E 104K-T | T | 42.6/82.6 |
| C119 | 4030011600 | S.CER C1608 JB 1E 104K-T | B | 31.2/86.7 |
| C120 | 4030006880 | S.CER C1608 JB 1H 472K-T | T | 36.7/101.5 |
| C121 | 4030011600 | S.CER C1608 JB 1E 104K-T | T | 39.5/101.5 |
| C125 | 4030011600 | S.CER C1608 JB 1E 104K-T | T | 14.6/83.1 |
| C129 | 4030011600 | S.CER C1608 JB 1E 104K-T | T | 33.4/79.8 |
| C130 | 4030017810 | S.CER C1608 CH 1H 102J-T | B | 47.6/106.6 |
| C131 | 4030011600 | S.CER C1608 JB 1E 104K-T | T | 30.4/73.2 |
| C132 | 4030011600 | S.CER C1608 JB 1E 104K-T | T | 35.5/73.2 |
| C133 | 4030006880 | S.CER C1608 JB 1H 472K-T | B | 43.5/98.6 |
| C134 | 4030006880 | S.CER C1608 JB 1H 472K-T | B | 43.5/96.8 |
| C135 | 4030006880 | S.CER C1608 JB 1H 472K-T | T | 46/95.5 |
| C136 | 4030006880 | S.CER C1608 JB 1H 472K-T | T | 46/94.2 |
| C137 | 4030006880 | S.CER C1608 JB 1H 472K-T | T | 46/90.3 |
| C138 | 4030006880 | S.CER C1608 JB 1H 472K-T | T | 46.1/87.7 |
| C139 | 4030006880 | S.CER C1608 JB 1H 472K-T | B | 43.5/100.4 |
| C140 | 4030006880 | S.CER C1608 JB 1H 472K-T | B | 43.5/102.2 |
| C141 | 4030004740 | S.CER C2012 JB 1H 472K-T | B | 34.3/85.1 |
| C142 | 4550007470 | S.TAN F931A107MNMBMA | B | 19.4/87.4 |
| C150 | 4340000050 | S.MYL ECH-U 1C472JB5 | T | 16.3/64.6 |
| C151 | 4550007520 | S.TAN F931A106MAABMA | B | 38.6/92.1 |
| C152 | 4030007070 | S.CER C1608 CH 1H 330J-T | T | 19.2/59.9 |
| C153 | 4030009910 | S.CER C1608 CH 1H 040B-T | T | 21.3/55.4 |
| C154 | 4610001850 | S.TRI TZB4R200AB10R00 (TZBX4R200BA110) | T | 17.6/55.1 |
| C155 | 4030016550 | S.CER CM105 CH 151G 50AT | T | 24.1/55.4 |
| C156 | 4030016550 | S.CER CM105 CH 151G 50AT | T | 26.9/55.4 |
| C157 | 4030016550 | S.CER CM105 CH 151G 50AT | T | 26.9/56.7 |
| C158 | 4030006880 | S.CER C1608 JB 1H 472K-T | T | 23.3/53.1 |
| C159 | 4030006880 | S.CER C1608 JB 1H 472K-T | B | 23/51.9 |
| C161 | 4510008540 | S.ELE EEE1CA100SR | T | 31.3/61 |
| C162 | 4030009920 | S.CER C1608 CH 1H 050B-T | B | 33.6/53 |
| C163 | 4030011600 | S.CER C1608 JB 1E 104K-T | B | 36.9/59.6 |
| C164 | 4030006880 | S.CER C1608 JB 1H 472K-T | B | 30.3/54.8 |
| C165 | 4030006880 | S.CER C1608 JB 1H 472K-T | B | 30.8/74 |
| C166 | 4030011600 | S.CER C1608 JB 1E 104K-T | B | 34.9/78.2 |
| C167 | 4030006880 | S.CER C1608 JB 1H 472K-T | B | 37.4/74 |
| C201 | 4030011340 | S.CER C1608 CH 1H 471J-T | T | 33.8/40.4 |
| C202 | 4510009280 | S.ELE EEE1EA4R7SR | T | 26.5/44 |
| C203 | 4030006900 | S.CER C1608 JB 1H 103K-T | T | 32.5/38.3 |
| C204 | 4030006880 | S.CER C1608 JB 1H 472K-T | T | 25.4/35.3 |
| C205 | 4030006880 | S.CER C1608 JB 1H 472K-T | T | 25.4/34 |
| C206 | 4030006880 | S.CER C1608 JB 1H 472K-T | T | 31.1/43 |
| C207 | 4030007030 | S.CER C1608 CH 1H 150J-T | B | 46.8/32.4 |
| C208 | 4030007030 | S.CER C1608 CH 1H 150J-T | T | 32.5/41 |
| C209 | 4030011340 | S.CER C1608 CH 1H 471J-T | T | 44.1/26.1 |
| C210 | 4550007620 | S.TAN F931V224MAABMA | T | 46.2/26.7 |
| C211 | 4550007300 | S.TAN F931A335MAABMA | B | 46.1/41.6 |
| C219 | 4030006880 | S.CER C1608 JB 1H 472K-T | T | 33.8/37.8 |
| C220 | 4030007130 | S.CER C1608 CH 1H 101J-T | T | 54.7/37.6 |
| C221 | 4030009520 | S.CER C1608 CH 1H 020B-T | T | 54.7/32 |
| C222 | 4610001860 | S.TRI TZB4Z060AB10R00 (TZBX4R200BA110) | T | 68.1/32.6 |
| C223 | 4030007080 | S.CER C1608 CH 1H 390J-T | T | 73.2/36.3 |
| C224 | 4030007010 | S.CER C1608 CH 1H 100D-T | T | 73.2/38.9 |
| C225 | 4030007050 | S.CER C1608 CH 1H 220J-T | T | 73.6/30.9 |
| C226 | 4030006880 | S.CER C1608 JB 1H 472K-T | T | 71/30.9 |
| C227 | 4030009920 | S.CER C1608 CH 1H 050B-T | T | 75.1/32.6 |
| C228 | 4510008540 | S.ELE EEE1CA100SR | T | 68.8/37.8 |
| C229 | 4030009530 | S.CER C1608 CH 1H 030B-T | T | 77.8/32.6 |
| C230 | 4030007100 | S.CER C1608 CH 1H 560J-T | T | 54.7/50 |
| C231 | 4030009510 | S.CER C1608 CH 1H 010B-T | T | 54.7/44.6 |
| C232 | 4610001860 | S.TRI TZB4Z060AB10R00 (TZBX4R200BA110) | T | 68.1/45.1 |
| C233 | 4030007070 | S.CER C1608 CH 1H 330J-T | T | 73.2/48.8 |
| C234 | 4030009920 | S.CER C1608 CH 1H 050B-T | T | 73.2/51.4 |
| C235 | 4030007020 | S.CER C1608 CH 1H 120J-T | T | 73.6/43.3 |
| C236 | 4030006880 | S.CER C1608 JB 1H 472K-T | T | 71/43.3 |
| C237 | 4030009910 | S.CER C1608 CH 1H 040B-T | T | 75.1/45 |
| C238 | 4510008540 | S.ELE EEE1CA100SR | T | 68.8/50.3 |
| C239 | 4030009910 | S.CER C1608 CH 1H 040B-T | T | 77.8/45 |
| C240 | 4030007080 | S.CER C1608 CH 1H 390J-T | T | 54.7/62.5 |
| C241 | 4030009510 | S.CER C1608 CH 1H 010B-T | T | 54.7/57.1 |
| C242 | 4610001860 | S.TRI TZB4Z060AB10R00 (TZBX4R200BA110) | T | 68.1/57.6 |
| C243 | 4030007060 | S.CER C1608 CH 1H 270J-T | T | 73.2/61.3 |
| C244 | 4030009910 | S.CER C1608 CH 1H 040B-T | T | 73.2/63.9 |
| C245 | 4030009920 | S.CER C1608 CH 1H 050B-T | T | 73.6/55.8 |
| C246 | 4030006880 | S.CER C1608 JB 1H 472K-T | T | 71/55.9 |
| C247 | 4030009530 | S.CER C1608 CH 1H 030B-T | T | 75.1/57.5 |
| C248 | 4510008540 | S.ELE EEE1CA100SR | T | 68.8/62.9 |
| C250 | 4030007100 | S.CER C1608 CH 1H 560J-T | T | 54.7/75 |
| C251 | 4030009540 | S.CER C1608 CH 1H 1R5B-T | T | 54.7/69.6 |
| C252 | 4610001810 | S.TRI TZB4Z030AB10R00 (TZBX4Z030BA110) | T | 68.1/70.1 |
| C253 | 4030007080 | S.CER C1608 CH 1H 390J-T | T | 73.2/73.8 |
| C254 | 4030009530 | S.CER C1608 CH 1H 030B-T | T | 73.2/76.4 |
| C255 | 4030006990 | S.CER C1608 CH 1H 080D-T | T | 73.6/68.4 |
| C256 | 4030006880 | S.CER C1608 JB 1H 472K-T | T | 71/68.4 |
| C257 | 4030007010 | S.CER C1608 CH 1H 100D-T | T | 75.1/70 |
| C258 | 4510008540 | S.ELE EEE1CA100SR | T | 68.8/75.4 |
| C260 | 4030007110 | S.CER C1608 CH 1H 680J-T | T | 54.7/87.5 |
| C262 | 4610001810 | S.TRI TZB4Z030AB10R00 (TZBX4Z030BA110) | T | 68.1/82.6 |
| C263 | 4030007080 | S.CER C1608 CH 1H 390J-T | T | 73.2/86.3 |
| C264 | 4030009530 | S.CER C1608 CH 1H 030B-T | T | 73.2/88.9 |
| C265 | 4030011770 | S.CER C1608 CH 1H 060B-T | T | 73.6/80.9 |
| C266 | 4030006880 | S.CER C1608 JB 1H 472K-T | T | 71/80.9 |
| C267 | 4030007010 | S.CER C1608 CH 1H 100D-T | T | 75.1/82.5 |
| C268 | 4510008540 | S.ELE EEE1CA100SR | T | 68.8/87.9 |

## [RXPLL-A UNIT]

| REF NO. | PARTS NO. | DESCRIPTION | M. | H/V LOCATION |
|---|---|---|---|---|
| C272 | 4610001860 | S.TRI TZB4Z060AB10R00 (TZBX4R200BA110) | T | 68.1/95.1 |
| C273 | 4030007050 | S.CER C1608 CH 1H 220J-T | T | 73.2/98.2 |
| C274 | 4030009530 | S.CER C1608 CH 1H 030B-T | T | 73.2/100.8 |
| C275 | 4030009920 | S.CER C1608 CH 1H 050B-T | T | 73.6/92.8 |
| C276 | 4030006880 | S.CER C1608 JB 1H 472K-T | T | 71/92.8 |
| C277 | 4030007010 | S.CER C1608 CH 1H 100D-T | T | 75.1/95 |
| C278 | 4510008540 | S.ELE EEE1CA100SR | T | 68.8/100.4 |
| C283 | 4030017810 | S.CER C1608 CH 1H 102J-T | T | 82.1/36.3 |
| C284 | 4030006880 | S.CER C1608 JB 1H 472K-T | T | 84.5/34.3 |
| C285 | 4030017810 | S.CER C1608 CH 1H 102J-T | T | 82.1/48.8 |
| C286 | 4030006880 | S.CER C1608 JB 1H 472K-T | T | 84.5/46.9 |
| C287 | 4030017810 | S.CER C1608 CH 1H 102J-T | T | 82.1/61.3 |
| C288 | 4030006880 | S.CER C1608 JB 1H 472K-T | T | 83.9/57.5 |
| C289 | 4030017810 | S.CER C1608 CH 1H 102J-T | T | 82.1/73.8 |
| C290 | 4030006880 | S.CER C1608 JB 1H 472K-T | T | 84.3/70.4 |
| C291 | 4030017810 | S.CER C1608 CH 1H 102J-T | T | 82.1/86.3 |
| C292 | 4030006880 | S.CER C1608 JB 1H 472K-T | T | 84.4/84.4 |
| C293 | 4030017810 | S.CER C1608 CH 1H 102J-T | T | 82.1/98.7 |
| C294 | 4030006880 | S.CER C1608 JB 1H 472K-T | T | 83.2/93.9 |
| C297 | 4030009920 | S.CER C1608 CH 1H 050B-T | T | 52.6/59.4 |
| C299 | 4030007050 | S.CER C1608 CH 1H 220J-T | T | 52.6/84.4 |
| C301 | 4030006880 | S.CER C1608 JB 1H 472K-T | T | 89.3/30.6 |
| C302 | 4030006880 | S.CER C1608 JB 1H 472K-T | T | 94.9/28 |
| C303 | 4030006880 | S.CER C1608 JB 1H 472K-T | B | 92.6/39.8 |
| C304 | 4030006880 | S.CER C1608 JB 1H 472K-T | B | 92.6/45.2 |
| C305 | 4030006880 | S.CER C1608 JB 1H 472K-T | B | 89.1/48.8 |
| C306 | 4030006880 | S.CER C1608 JB 1H 472K-T | B | 89.1/50.6 |
| C309 | 4030017810 | S.CER C1608 CH 1H 102J-T | T | 94.9/42.7 |
| C310 | 4030011600 | S.CER C1608 JB 1E 104K-T | T | 92.8/42.1 |
| C311 | 4510008520 | S.ELE EEE1CA470SP | T | 93.4/47.4 |
| C312 | 4030006880 | S.CER C1608 JB 1H 472K-T | B | 89/27.4 |
| C313 | 4030006880 | S.CER C1608 JB 1H 472K-T | B | 93.7/23.1 |
| C331 | 4030007110 | S.CER C1608 CH 1H 680J-T | T | 89.3/32.2 |
| C332 | 4030007160 | S.CER C1608 CH 1H 181J-T | T | 92.1/33.5 |
| C333 | 4030007110 | S.CER C1608 CH 1H 680J-T | T | 89.3/33.5 |
| C334 | 4030007050 | S.CER C1608 CH 1H 220J-T | T | 94.9/36 |
| C335 | 4030006980 | S.CER C1608 CH 1H 070D-T | T | 94.9/37.4 |
| C336 | 4030007030 | S.CER C1608 CH 1H 150J-T | T | 92.1/38.8 |
| C337 | 4030007050 | S.CER C1608 CH 1H 220J-T | T | 94.9/38.8 |
| C341 | 4030006880 | S.CER C1608 JB 1H 472K-T | T | 94.9/40.1 |
| C342 | 4030006880 | S.CER C1608 JB 1H 472K-T | T | 86.5/33.5 |
| C344 | 4030011600 | S.CER C1608 JB 1E 104K-T | T | 94.9/41.4 |
| C351 | 4030017810 | S.CER C1608 CH 1H 102J-T | T | 94.9/61.6 |
| C352 | 4030011600 | S.CER C1608 JB 1E 104K-T | T | 94.9/62.9 |
| C353 | 4510008520 | S.ELE EEE1CA470SP | T | 93.4/67.1 |
| C354 | 4030006880 | S.CER C1608 JB 1H 472K-T | T | 89.3/51.7 |
| C355 | 4030006880 | S.CER C1608 JB 1H 472K-T | T | 94.9/55.1 |
| C356 | 4030006880 | S.CER C1608 JB 1H 472K-T | T | 89.2/58.4 |
| C357 | 4030006880 | S.CER C1608 JB 1H 472K-T | T | 94.9/57.7 |
| C358 | 4030006880 | S.CER C1608 JB 1H 472K-T | B | 89.2/60.3 |
| C359 | 4030006880 | S.CER C1608 JB 1H 472K-T | B | 92.6/62.1 |
| C360 | 4030006880 | S.CER C1608 JB 1H 472K-T | B | 89.9/66.9 |
| C361 | 4030006880 | S.CER C1608 JB 1H 472K-T | T | 89.3/83.4 |
| C363 | 4030006880 | S.CER C1608 JB 1H 472K-T | T | 86.1/60.9 |
| C364 | 4030017810 | S.CER C1608 CH 1H 102J-T | T | 86.7/52.3 |
| C365 | 4030006880 | S.CER C1608 JB 1H 472K-T | T | 90.3/59.9 |
| C421 | 4030006880 | S.CER C1608 JB 1H 472K-T | T | 94.1/88.5 |
| C422 | 4030006880 | S.CER C1608 JB 1H 472K-T | T | 87.3/88.5 |
| C423 | 4030006880 | S.CER C1608 JB 1H 472K-T | T | 94.1/93.3 |
| C424 | 4030006880 | S.CER C1608 JB 1H 472K-T | T | 87.9/93.3 |
| C425 | 4030006880 | S.CER C1608 JB 1H 472K-T | T | 92.8/93.3 |
| C426 | 4030006880 | S.CER C1608 JB 1H 472K-T | B | 94.6/87.3 |
| C427 | 4030006880 | S.CER C1608 JB 1H 472K-T | T | 92.1/86.5 |
| C428 | 4030006880 | S.CER C1608 JB 1H 472K-T | T | 89.3/86.5 |
| C441 | 4030007040 | S.CER C1608 CH 1H 180J-T | T | 94.9/71.3 |
| C442 | 4030007040 | S.CER C1608 CH 1H 180J-T | T | 94.9/72.6 |
| C443 | 4030007020 | S.CER C1608 CH 1H 120J-T | T | 92.1/74.2 |
| C444 | 4030007080 | S.CER C1608 CH 1H 390J-T | T | 94.9/73.9 |
| C445 | 4030011770 | S.CER C1608 CH 1H 060B-T | T | 94.9/75.2 |
| C446 | 4030007060 | S.CER C1608 CH 1H 270J-T | T | 94.9/79.1 |
| C447 | 4030007110 | S.CER C1608 CH 1H 680J-T | T | 92.8/78.9 |
| C448 | 4030006880 | S.CER C1608 JB 1H 472K-T | T | 94.9/76.5 |
| C449 | 4030006880 | S.CER C1608 JB 1H 472K-T | T | 88.1/69.1 |
| C451 | 4030007110 | S.CER C1608 CH 1H 680J-T | T | 92/82.1 |
| C452 | 4030007160 | S.CER C1608 CH 1H 181J-T | T | 92/80.8 |
| C453 | 4030011600 | S.CER C1608 JB 1E 104K-T | T | 94.9/77.8 |
| C501 | 4030006880 | S.CER C1608 JB 1H 472K-T | T | 38.9/131.2 |
| C502 | 4030011600 | S.CER C1608 JB 1E 104K-T | T | 38.9/129.9 |
| C503 | 4510008540 | S.ELE EEE1CA100SR | T | 36.6/126.7 |
| C504 | 4030011600 | S.CER C1608 JB 1E 104K-T | T | 21.4/153.1 |
| C505 | 4550007470 | S.TAN F931A107MNMBMA | B | 19.2/140.3 |
| C506 | 4030011600 | S.CER C1608 JB 1E 104K-T | T | 21.4/141 |
| C507 | 4030011600 | S.CER C1608 JB 1E 104K-T | T | 21.4/137.1 |
| C509 | 4030011600 | S.CER C1608 JB 1E 104K-T | T | 25.8/132.6 |
| C510 | 4030011600 | S.CER C1608 JB 1E 104K-T | T | 28.4/132.6 |
| C511 | 4030011600 | S.CER C1608 JB 1E 104K-T | T | 32.2/132.6 |
| C512 | 4030011600 | S.CER C1608 JB 1E 104K-T | T | 34.8/132.6 |
| C513 | 4030011600 | S.CER C1608 JB 1E 104K-T | T | 37.4/132.6 |
| C514 | 4030011600 | S.CER C1608 JB 1E 104K-T | T | 41.2/136 |
| C515 | 4030011600 | S.CER C1608 JB 1E 104K-T | T | 41.3/139.7 |
| C516 | 4030011600 | S.CER C1608 JB 1E 104K-T | T | 41.3/142.3 |
| C517 | 4030011600 | S.CER C1608 JB 1E 104K-T | T | 37.6/151.8 |
| C518 | 4030011600 | S.CER C1608 JB 1E 104K-T | T | 34.8/151.8 |
| C519 | 4030011600 | S.CER C1608 JB 1E 104K-T | T | 31.2/151.8 |
| C520 | 4030011600 | S.CER C1608 JB 1E 104K-T | T | 23.3/151.9 |
| C521 | 4030011600 | S.CER C1608 JB 1E 104K-T | T | 41.6/134 |
| C522 | 4550007220 | S.TAN F931A476MCMBMA | B | 40.7/145 |
| C525 | 4030006880 | S.CER C1608 JB 1H 472K-T | T | 35.3/154.5 |
| C526 | 4030011600 | S.CER C1608 JB 1E 104K-T | T | 36.6/154.5 |
| C531 | 4030006880 | S.CER C1608 JB 1H 472K-T | T | 14.6/137.5 |
| C532 | 4030007070 | S.CER C1608 CH 1H 330J-T | T | 17.2/137.5 |
| C533 | 4030007110 | S.CER C1608 CH 1H 680J-T | T | 17.3/133.4 |
| C534 | 4030007110 | S.CER C1608 CH 1H 680J-T | T | 16.8/130.1 |
| C535 | 4030007070 | S.CER C1608 CH 1H 330J-T | T | 18.1/127 |

M.=Mounted side (T: Mounted on the Top side, B: Mounted on the Bottom side)
S.=Surface mount

## [RXPLL-A UNIT]

| REF NO. | PARTS NO. | DESCRIPTION | M. | H/V LOCATION |
|---|---|---|---|---|
| C536 | 4030006880 | S.CER C1608 JB 1H 472K-T | T | 20.9/127.6 |
| C537 | 4030006880 | S.CER C1608 JB 1H 472K-T | T | 27.2/126.4 |
| C540 | 4030006880 | S.CER C1608 JB 1H 472K-T | B | 56.3/142.8 |
| C541 | 4510008540 | S.ELE EEE1CA100SR | T | 51/139.3 |
| C542 | 4340000260 | S.MYL ECPU1C104MA5 | B | 47.8/128.7 |
| C543 | 4030007060 | S.CER C1608 CH 1H 270J-T | T | 62.2/136.4 |
| C545 | 4030008560 | S.CER C1608 CH 1H 300J-T | T | 70/137.1 |
| C546 | 4611001830 | S.TRI TZB4S100AB10R00 (TZBX4N100BA110) | T | 65.8/138.7 |
| C547 | 4030007130 | S.CER C1608 CH 1H 101J-T | T | 71.3/137.1 |
| C548 | 4030007010 | S.CER C1608 CH 1H 100D-T | T | 71.3/139.9 |
| C549 | 4030007050 | S.CER C1608 CH 1H 220J-T | T | 68.9/145.1 |
| C550 | 4030006880 | S.CER C1608 JB 1H 472K-T | T | 66.3/143 |
| C551 | 4030009520 | S.CER C1608 CH 1H 020B-T | T | 71.3/142.8 |
| C552 | 4030017810 | S.CER C1608 CH 1H 102J-T | B | 54.6/139.5 |
| C553 | 4030006880 | S.CER C1608 JB 1H 472K-T | B | 56.3/139.5 |
| C554 | 4510008500 | S.ELE EEE1CA101WP | T | 50.9/146.6 |
| C555 | 4030006880 | S.CER C1608 JB 1H 472K-T | B | 47.7/149.5 |
| C556 | 4550007220 | S.TAN F931A476MCMBMA | B | 76.4/136.1 |
| C558 | 4550007520 | S.TAN F931A106MAABMA | B | 43.4/132.5 |
| C559 | 4550007400 | S.TAN F931A225MAABMA | B | 43.4/129.9 |
| C561 | 4550007520 | S.TAN F931A106MAABMA | T | 70/157.5 |
| C562 | 4030006880 | S.CER C1608 JB 1H 472K-T | T | 68.3/155.5 |
| C563 | 4030017810 | S.CER C1608 CH 1H 102J-T | B | 60.1/158 |
| C564 | 4030006880 | S.CER C1608 JB 1H 472K-T | B | 58.8/158 |
| C565 | 4510008520 | S.ELE EEE1CA470SP | T | 50.9/155.6 |
| C566 | 4030006880 | S.CER C1608 JB 1H 472K-T | T | 64.4/155.5 |
| C571 | 4030006880 | S.CER C1608 JB 1H 472K-T | B | 58.5/161.3 |
| C573 | 4030007040 | S.CER C1608 CH 1H 180J-T | B | 72.5/166.8 |
| C574 | 4030009510 | S.CER C1608 CH 1H 010B-T | T | 72.6/169.1 |
| C575 | 4030007040 | S.CER C1608 CH 1H 180J-T | T | 72.6/171.9 |
| C580 | 4030006880 | S.CER C1608 JB 1H 472K-T | T | 41.9/152.4 |
| C581 | 4030006880 | S.CER C1608 JB 1H 472K-T | T | 41.9/144.2 |
| C591 | 4030006880 | S.CER C1608 JB 1H 472K-T | T | 63.5/171.2 |
| C592 | 4030007060 | S.CER C1608 CH 1H 270J-T | T | 62.8/163.1 |
| C593 | 4510008540 | S.ELE EEE1CA100SR | T | 54.4/170.7 |
| C594 | 4030006880 | S.CER C1608 JB 1H 472K-T | T | 57.4/171.9 |
| C596 | 4030006880 | S.CER C1608 JB 1H 472K-T | B | 63.7/168.1 |
| C597 | 4030007050 | S.CER C1608 CH 1H 220J-T | T | 62.2/171.2 |
| C604 | 4030011600 | S.CER C1608 JB 1E 104K-T | B | 50.6/111 |
| C605 | 4510008540 | S.ELE EEE1CA100SR | T | 52.5/110.9 |
| C651 | 4030006880 | S.CER C1608 JB 1H 472K-T | T | 13.5/174 |
| C652 | 4030011600 | S.CER C1608 JB 1E 104K-T | T | 12.7/176.3 |
| C653 | 4510008540 | S.ELE EEE1CA100SR | T | 6.8/172.6 |
| C654 | 4030011600 | S.CER C1608 JB 1E 104K-T | B | 17.3/170.4 |
| C655 | 4030011600 | S.CER C1608 JB 1E 104K-T | T | 25.9/161.4 |
| C656 | 4030011600 | S.CER C1608 JB 1E 104K-T | T | 25.8/177.1 |
| C657 | 4030011600 | S.CER C1608 JB 1E 104K-T | T | 31.7/169.3 |
| C658 | 4030011600 | S.CER C1608 JB 1E 104K-T | T | 13.5/172.7 |
| C659 | 4030011600 | S.CER C1608 JB 1E 104K-T | T | 16.5/163.4 |
| C660 | 4030006880 | S.CER C1608 JB 1H 472K-T | T | 17.6/161.4 |
| C661 | 4030011600 | S.CER C1608 JB 1E 104K-T | T | 13.3/166.1 |
| C662 | 4550007220 | S.TAN F931A476MCMBMA | B | 30.6/170.9 |
| C680 | 4030006880 | S.CER C1608 JB 1H 472K-T | T | 34.3/177.1 |
| C681 | 4030011340 | S.CER C1608 CH 1H 471J-T | T | 40.3/177.1 |
| C682 | 4030007120 | S.CER C1608 CH 1H 820J-T | T | 39.6/175.2 |
| C683 | 4030017870 | S.CER C1608 CH 1H 681J-T | T | 40.9/175.2 |
| C684 | 4030007070 | S.CER C1608 CH 1H 330J-T | B | 39.3/174 |
| C685 | 4030017800 | S.CER C1608 CH 1H 561J-T | B | 42.3/172.6 |
| C686 | 4030011280 | S.CER C1608 CH 1H 271J-T | B | 39.3/170.6 |
| C687 | 4030017810 | S.CER C1608 CH 1H 102J-T | T | 41/169.7 |
| C688 | 4030011280 | S.CER C1608 CH 1H 271J-T | B | 37.5/169.7 |
| C689 | 4030011600 | S.CER C1608 JB 1E 104K-T | T | 37.4/166.4 |
| C690 | 4030011600 | S.CER C1608 JB 1E 104K-T | T | 37.4/161.3 |
| C691 | 4030011600 | S.CER C1608 JB 1E 104K-T | T | 46.4/164 |
| C692 | 4030006880 | S.CER C1608 JB 1H 472K-T | T | 40.3/162.1 |
| C693 | 4030006880 | S.CER C1608 JB 1H 472K-T | B | 58.4/169.6 |
| C694 | 4030006880 | S.CER C1608 JB 1H 472K-T | B | 58.4/164.2 |
| C703 | 4030017810 | S.CER C1608 CH 1H 102J-T | T | 24.3/116.6 |
| C704 | 4030006880 | S.CER C1608 JB 1H 472K-T | T | 23/116.6 |
| C705 | 4510008500 | S.ELE EEE1CA101WP | T | 29.4/118.7 |
| C707 | 4030011600 | S.CER C1608 JB 1E 104K-T | T | 32.1/113.7 |
| C708 | 4030011600 | S.CER C1608 JB 1E 104K-T | T | 32.1/108.1 |
| C709 | 4030007070 | S.CER C1608 CH 1H 330J-T | T | 38.8/112.9 |
| C710 | 4030006880 | S.CER C1608 JB 1H 472K-T | T | 36.2/112.9 |
| C711 | 4030009540 | S.CER C1608 CH 1H 1R5B-T | B | 39.3/113.6 |
| C712 | 4030007070 | S.CER C1608 CH 1H 330J-T | T | 36.2/114.2 |
| C713 | 4030006880 | S.CER C1608 JB 1H 472K-T | T | 42/118.8 |
| C801 | 4030006880 | S.CER C1608 JB 1H 472K-T | T | 58.5/157.6 |
| C802 | 4030007030 | S.CER C1608 CH 1H 150J-T | T | 83.2/149.5 |
| C803 | 4030006900 | S.CER C1608 JB 1H 103K-T | T | 80.9/147.3 |
| C811 | 4030011600 | S.CER C1608 JB 1E 104K-T | T | 44.5/165.9 |
| C812 | 4030011600 | S.CER C1608 JB 1E 104K-T | T | 79.6/177.6 |
| C813 | 4030017800 | S.CER C1608 CH 1H 561J-T | B | 78.9/175.6 |
| C831 | 4030009910 | S.CER C1608 CH 1H 040B-T | T | 91.6/167.3 |
| C832 | 4030009510 | S.CER C1608 CH 1H 010B-T | T | 91.6/157 |
| C834 | 4030007030 | S.CER C1608 CH 1H 150J-T | T | 91.6/154.4 |
| C835 | 4030006900 | S.CER C1608 JB 1H 103K-T | T | 94.4/154.4 |
| C836 | 4510008540 | S.ELE EEE1CA100SR | T | 77.2/169.6 |
| C837 | 4030006880 | S.CER C1608 JB 1H 472K-T | T | 74.5/165.8 |
| C838 | 4030007020 | S.CER C1608 CH 1H 120J-T | T | 95/160 |
| C1000 | 4030007050 | S.CER C1608 CH 1H 220J-T | B | 177.1/13.8 |
| C1001 | 4030007170 | S.CER C1608 CH 1H 221J-T | T | 177.8/69.5 |
| C1002 | 4030006880 | S.CER C1608 JB 1H 472K-T | B | 153.1/16.2 |
| C1003 | 4030012600 | S.CER C2012 JB 1A 105M-T | T | 157.4/8.2 |
| C1004 | 4030011600 | S.CER C1608 JB 1E 104K-T | B | 169.6/8.7 |
| C1005 | 4030011600 | S.CER C1608 JB 1E 104K-T | T | 162.8/17.2 |
| C1006 | 4030010210 | S.CER C3216 JB 1C 105M-T | T | 173.8/18.6 |
| C1007 | 4030006880 | S.CER C1608 JB 1H 472K-T | T | 172.4/23.9 |
| C1008 | 4030006880 | S.CER C1608 JB 1H 472K-T | T | 160/24 |
| C1009 | 4030006880 | S.CER C1608 JB 1H 472K-T | T | 147.6/23.8 |
| C1010 | 4030012600 | S.CER C2012 JB 1A 105M-T | T | 154.5/28.9 |
| C1011 | 4030012600 | S.CER C2012 JB 1A 105M-T | T | 144.2/29.3 |
| C1012 | 4030010210 | S.CER C3216 JB 1C 105M-T | T | 144.8/40.2 |
| C1013 | 4030012600 | S.CER C2012 JB 1A 105M-T | T | 144.2/33.2 |

## [RXPLL-A UNIT]

| REF NO. | PARTS NO. | DESCRIPTION | M. | H/V LOCATION |
|---|---|---|---|---|
| C1014 | 4030018810 | S.CER C3216 CH 1H 333J-T | B | 151.6/48.3 |
| C1015 | 4030012600 | S.CER C2012 JB 1A 105M-T | T | 163.6/13.8 |
| C1016 | 4030012600 | S.CER C2012 JB 1A 105M-T | T | 173.6/33.2 |
| C1017 | 4030012600 | S.CER C2012 JB 1A 105M-T | T | 163.3/33.2 |
| C1020 | 4030012600 | S.CER C2012 JB 1A 105M-T | B | 170/38.6 |
| C1021 | 4030012600 | S.CER C2012 JB 1A 105M-T | B | 154/38.6 |
| C1024 | 4030010210 | S.CER C3216 JB 1C 105M-T | B | 170.5/45.5 |
| C1025 | 4030010210 | S.CER C3216 JB 1C 105M-T | B | 154.7/45.5 |
| C1026 | 4030010210 | S.CER C3216 JB 1C 105M-T | T | 171.4/52.7 |
| C1027 | 4030010210 | S.CER C3216 JB 1C 105M-T | T | 165.6/52.7 |
| C1028 | 4030006880 | S.CER C1608 JB 1H 472K-T | B | 156.4/65.4 |
| C1029 | 4030006880 | S.CER C1608 JB 1H 472K-T | T | 168.5/65.4 |
| C1030 | 4030010210 | S.CER C3216 JB 1C 105M-T | T | 164.5/18 |
| C1031 | 4030012600 | S.CER C2012 JB 1A 105M-T | B | 169.2/10.8 |
| C1032 | 4030011600 | S.CER C1608 JB 1E 104K-T | B | 183.5/65 |
| C1033 | 4550006470 | S.TAN TEESVB2 1D 106M8R | B | 146.5/47.7 |
| C1034 | 4550006470 | S.TAN TEESVB2 1D 106M8R | B | 174/52.1 |
| C1035 | 4550006470 | S.TAN TEESVB2 1D 106M8R | B | 164.6/15.8 |
| C1036 | 4030007120 | S.CER C1608 CH 1H 820J-T | T | 160.2/12.7 |
| C1037 | 4030007090 | S.CER C1608 CH 1H 470J-T | B | 149.3/49.3 |
| C1038 | 4030017810 | S.CER C1608 CH 1H 102J-T | T | 146.6/26.2 |
| C1039 | 4030017810 | S.CER C1608 CH 1H 102J-T | T | 146.5/41 |
| C1040 | 4030017810 | S.CER C1608 CH 1H 102J-T | T | 145.3/36.4 |
| C1041 | 4030006990 | S.CER C1608 CH 1H 080D-T | B | 153.4/31 |
| C1046 | 4030007010 | S.CER C1608 CH 1H 100D-T | B | 168.4/53.7 |
| C1048 | 4030006880 | S.CER C1608 JB 1H 472K-T | B | 170.6/41.6 |
| C1049 | 4030006880 | S.CER C1608 JB 1H 472K-T | B | 154.6/41.6 |
| C1050 | 4030017810 | S.CER C1608 CH 1H 102J-T | B | 170.5/49.5 |
| C1051 | 4030017810 | S.CER C1608 CH 1H 102J-T | B | 154.7/49.4 |
| C1052 | 4030007060 | S.CER C1608 CH 1H 270J-T | B | 164.1/29.6 |
| C1053 | 4030007110 | S.CER C1608 CH 1H 680J-T | T | 175.2/77.3 |
| C1054 | 4030007010 | S.CER C1608 CH 1H 100D-T | B | 175.7/72.4 |
| C1055 | 4030007140 | S.CER C1608 CH 1H 121J-T | B | 175.7/74.2 |
| C1056 | 4030007050 | S.CER C1608 CH 1H 220J-T | T | 175.2/76 |
| C1057 | 4030007130 | S.CER C1608 CH 1H 101J-T | T | 172.1/77.1 |
| C1058 | 4030009920 | S.CER C1608 CH 1H 050B-T | B | 173.2/12.7 |
| C1060 | 4030017810 | S.CER C1608 CH 1H 102J-T | T | 178.6/94.4 |
| C1061 | 4030007090 | S.CER C1608 CH 1H 470J-T | B | 147.7/91.8 |
| C1062 | 4030007170 | S.CER C1608 CH 1H 221J-T | B | 149.5/91.8 |
| C1064 | 4030007090 | S.CER C1608 CH 1H 470J-T | T | 148.7/80.1 |
| C1066 | 4030007010 | S.CER C1608 CH 1H 100D-T | T | 138.6/81.9 |
| C1067 | 4030007010 | S.CER C1608 CH 1H 100D-T | T | 173.4/77.1 |
| C1070 | 4030006980 | S.CER C1608 CH 1H 070D-T | T | 137.2/81.9 |
| C1071 | 4030007100 | S.CER C1608 CH 1H 560J-T | B | 162.2/75.3 |
| C1072 | 4030007170 | S.CER C1608 CH 1H 221J-T | B | 162/78.7 |
| C1073 | 4030007080 | S.CER C1608 CH 1H 390J-T | B | 164.1/76.4 |
| C1074 | 4030007060 | S.CER C1608 CH 1H 270J-T | T | 148.7/78.6 |
| C1081 | 4030006900 | S.CER C1608 JB 1H 103K-T | B | 156.1/86 |
| C1082 | 4030006900 | S.CER C1608 JB 1H 103K-T | B | 151.3/91.8 |
| C1083 | 4030006900 | S.CER C1608 JB 1H 103K-T | B | 151.2/81.6 |
| C1084 | 4030006880 | S.CER C1608 JB 1H 472K-T | B | 149.4/81.6 |
| C1085 | 4030006880 | S.CER C1608 JB 1H 472K-T | B | 153/81.6 |
| C1091 | 4030006880 | S.CER C1608 JB 1H 472K-T | T | 149.3/149.4 |
| C1092 | 4030006880 | S.CER C1608 JB 1H 472K-T | T | 147/138.5 |
| C1093 | 4030006880 | S.CER C1608 JB 1H 472K-T | T | 161.3/135.8 |
| C1101 | 4030006900 | S.CER C1608 JB 1H 103K-T | T | 177/90.9 |
| C1102 | 4030006900 | S.CER C1608 JB 1H 103K-T | T | 175.4/115.5 |
| C1103 | 4030011600 | S.CER C1608 JB 1E 104K-T | T | 179.6/116.4 |
| C1104 | 4030011600 | S.CER C1608 JB 1E 104K-T | T | 175.4/87.7 |
| C1106 | 4030011600 | S.CER C1608 JB 1E 104K-T | T | 179.3/128.8 |
| C1107 | 4030011600 | S.CER C1608 JB 1E 104K-T | B | 172.3/124.2 |
| C1109 | 4030007090 | S.CER C1608 CH 1H 470J-T | T | 175.7/137.9 |
| C1110 | 4030006900 | S.CER C1608 JB 1H 103K-T | T | 175.7/136.6 |
| C1111 | 4030011600 | S.CER C1608 JB 1E 104K-T | T | 176.7/132 |
| C1112 | 4030006900 | S.CER C1608 JB 1H 103K-T | T | 179.3/132 |
| C1113 | 4030007090 | S.CER C1608 CH 1H 470J-T | T | 178.6/140.9 |
| C1114 | 4030006900 | S.CER C1608 JB 1H 103K-T | B | 178.4/138 |
| C1115 | 4030011600 | S.CER C1608 JB 1E 104K-T | T | 175.7/140 |
| C1116 | 4030006900 | S.CER C1608 JB 1H 103K-T | T | 165.7/138.7 |
| C1117 | 4030007010 | S.CER C1608 CH 1H 100D-T | T | 169.7/142.2 |
| C1118 | 4030011600 | S.CER C1608 JB 1E 104K-T | T | 171/142.2 |
| C1119 | 4030006880 | S.CER C1608 JB 1H 472K-T | T | 171.9/146.6 |
| C1120 | 4030006880 | S.CER C1608 JB 1H 472K-T | T | 171.9/148.4 |
| C1121 | 4030011600 | S.CER C1608 JB 1E 104K-T | T | 180.6/147.7 |
| C1122 | 4030009530 | S.CER C1608 CH 1H 030B-T | T | 178.2/120.3 |
| C1123 | 4030006900 | S.CER C1608 JB 1H 103K-T | T | 182.1/100.9 |
| C1124 | 4030006900 | S.CER C1608 JB 1H 103K-T | T | 175.3/105.9 |
| C1125 | 4030006900 | S.CER C1608 JB 1H 103K-T | T | 175.5/85.1 |
| C1126 | 4030011600 | S.CER C1608 JB 1E 104K-T | T | 173.4/131.1 |
| C1151 | 4030007110 | S.CER C1608 CH 1H 680J-T | B | 123.1/64 |
| C1152 | 4030007110 | S.CER C1608 CH 1H 680J-T | B | 123.1/57 |
| C1153 | 4030017810 | S.CER C1608 CH 1H 102J-T | T | 131.5/63.9 |
| C1201 | 4030007110 | S.CER C1608 CH 1H 680J-T | B | 120.2/21.8 |
| C1202 | 4030007110 | S.CER C1608 CH 1H 680J-T | B | 118.4/21.8 |
| C1207 | 4030006880 | S.CER C1608 JB 1H 472K-T | B | 123/11.8 |
| C1214 | 4030007170 | S.CER C1608 CH 1H 221J-T | T | 137.3/55.3 |
| C1215 | 4030011600 | S.CER C1608 JB 1E 104K-T | T | 137.6/51.9 |
| C1226 | 4030009500 | S.CER C1608 CH 1H 0R5B-T | B | 124.9/35.6 |
| C1227 | 4030009500 | S.CER C1608 CH 1H 0R5B-T | B | 115.4/35.6 |
| C1228 | 4030009920 | S.CER C1608 CH 1H 050B-T | B | 113.9/41.8 |
| C1231 | 4030006900 | S.CER C1608 JB 1H 103K-T | T | 118.9/21.5 |
| C1232 | 4030006900 | S.CER C1608 JB 1H 103K-T | T | 109/21.5 |
| C1234 | 4030006900 | S.CER C1608 JB 1H 103K-T | B | 123.5/38.3 |
| C1235 | 4030006880 | S.CER C1608 JB 1H 472K-T | B | 116.6/32.1 |
| C1236 | 4030006900 | S.CER C1608 JB 1H 103K-T | T | 119.8/40 |
| C1238 | 4030006900 | S.CER C1608 JB 1H 103K-T | B | 114/38.3 |
| C1239 | 4030006880 | S.CER C1608 JB 1H 472K-T | B | 106.8/32.3 |
| C1240 | 4030006900 | S.CER C1608 JB 1H 103K-T | T | 111.7/40.5 |
| C1241 | 4030006900 | S.CER C1608 JB 1H 103K-T | T | 113.6/38.6 |
| C1243 | 4030006880 | S.CER C1608 JB 1H 472K-T | B | 129.6/46.7 |
| C1244 | 4030007080 | S.CER C1608 CH 1H 390J-T | T | 149.6/67 |
| C1245 | 4030007130 | S.CER C1608 CH 1H 101J-T | T | 151/64.4 |
| C1246 | 4030007120 | S.CER C1608 CH 1H 820J-T | T | 150.9/67 |
| C1247 | 4030007090 | S.CER C1608 CH 1H 470J-T | T | 153.4/63.5 |
| C1248 | 4030007130 | S.CER C1608 CH 1H 101J-T | T | 153.4/66.8 |

M.=Mounted side (T: Mounted on the Top side, B: Mounted on the Bottom side)
S.=Surface mount

## [RXPLL-A UNIT]

| REF NO. | PARTS NO. | DESCRIPTION | M. | H/V LOCATION |
|---|---|---|---|---|
| C1249 | 4030007020 | S.CER C1608 CH 1H 120J-T | T | 153.1/70.3 |
| C1250 | 4030007100 | S.CER C1608 CH 1H 560J-T | B | 152.4/74.3 |
| C1251 | 4030006900 | S.CER C1608 JB 1H 103K-T | T | 160.2/92.9 |
| C1252 | 4030006900 | S.CER C1608 JB 1H 103K-T | T | 152.7/92.9 |
| C1253 | 4030006900 | S.CER C1608 JB 1H 103K-T | B | 152.5/111.2 |
| C1255 | 4030017810 | S.CER C1608 CH 1H 102J-T | B | 155.7/99.3 |
| C1256 | 4030007010 | S.CER C1608 CH 1H 100D-T | T | 156.3/98.8 |
| C1257 | 4030011600 | S.CER C1608 JB 1E 104K-T | B | 155.7/103 |
| C1258 | 4030007080 | S.CER C1608 CH 1H 390J-T | B | 152/97.5 |
| C1264 | 4030007110 | S.CER C1608 CH 1H 680J-T | T | 122/51.1 |
| C1265 | 4610001830 | S.TRI TZB4S100AB10R00 (TZBX4N100BA110) | T | 163.8/70.8 |
| C1266 | 4030007020 | S.CER C1608 CH 1H 120J-T | T | 160.1/74.5 |
| C1267 | 4030006880 | S.CER C1608 JB 1H 472K-T | B | 157/126.4 |
| C1268 | 4030006980 | S.CER C1608 CH 1H 070D-T | T | 149.6/64.4 |
| C1302 | 4030007060 | S.CER C1608 CH 1H 270J-T | T | 159.3/111 |
| C1303 | 4030006980 | S.CER C1608 CH 1H 070D-T | T | 159.3/112.9 |
| C1304 | 4030007070 | S.CER C1608 CH 1H 330J-T | T | 159.3/114.2 |
| C1305 | 4030007010 | S.CER C1608 CH 1H 100D-T | T | 153.5/114.6 |
| C1306 | 4030009650 | S.CER C1608 CH 1H 240J-T | T | 159.3/115.5 |
| C1307 | 4030007030 | S.CER C1608 CH 1H 150J-T | T | 153.5/120.2 |
| C1308 | 4030006900 | S.CER C1608 JB 1H 103K-T | T | 155.1/127.1 |
| C1309 | 4030007080 | S.CER C1608 CH 1H 390J-T | T | 156.5/125.8 |
| C1310 | 4030007080 | S.CER C1608 CH 1H 390J-T | T | 159.1/128.4 |
| C1311 | 4030006900 | S.CER C1608 JB 1H 103K-T | B | 149/118.9 |
| C1312 | 4030007060 | S.CER C1608 CH 1H 270J-T | T | 155.5/111.7 |
| C1313 | 4030007060 | S.CER C1608 CH 1H 270J-T | T | 159.1/127.1 |
| C1355 | 4030006880 | S.CER C1608 JB 1H 472K-T | T | 144.7/70 |
| C1357 | 4030007000 | S.CER C1608 CH 1H 090D-T | B | 144.6/67.1 |
| C1358 | 4030011600 | S.CER C1608 JB 1E 104K-T | B | 139.1/70.4 |
| C1360 | 4030011600 | S.CER C1608 JB 1E 104K-T | B | 146.4/70.4 |
| C1361 | 4030007020 | S.CER C1608 CH 1H 120J-T | B | 137.7/69.5 |
| C1362 | 4030011600 | S.CER C1608 JB 1E 104K-T | T | 137.5/65.6 |
| C1403 | 4030017810 | S.CER C1608 CH 1H 102J-T | T | 114.7/70.3 |
| C1404 | 4030017810 | S.CER C1608 CH 1H 102J-T | T | 116.3/104.8 |
| C1405 | 4030006900 | S.CER C1608 JB 1H 103K-T | B | 115.9/63.9 |
| C1406 | 4030017810 | S.CER C1608 CH 1H 102J-T | T | 114.2/66.2 |
| C1407 | 4030017810 | S.CER C1608 CH 1H 102J-T | T | 119.9/70.3 |
| C1408 | 4030006900 | S.CER C1608 JB 1H 103K-T | T | 116.3/73 |
| C1409 | 4030006900 | S.CER C1608 JB 1H 103K-T | T | 114.4/68.1 |
| C1410 | 4030007030 | S.CER C1608 CH 1H 150J-T | T | 116.3/83.3 |
| C1411 | 4030006990 | S.CER C1608 CH 1H 080D-T | T | 112.2/87.8 |
| C1412 | 4030007030 | S.CER C1608 CH 1H 150J-T | T | 116.3/93.7 |
| C1413 | 4030007020 | S.CER C1608 CH 1H 120J-T | T | 107/83.3 |
| C1414 | 4030006990 | S.CER C1608 CH 1H 080D-T | T | 103.6/86.6 |
| C1415 | 4030007020 | S.CER C1608 CH 1H 120J-T | T | 107/93.7 |
| C1416 | 4030006900 | S.CER C1608 JB 1H 103K-T | T | 113.2/103.4 |
| C1417 | 4030006900 | S.CER C1608 JB 1H 103K-T | T | 110.5/107.6 |
| C1418 | 4030017810 | S.CER C1608 CH 1H 102J-T | T | 110.4/105.8 |
| C1419 | 4030017810 | S.CER C1608 CH 1H 102J-T | T | 111/108.9 |
| C1420 | 4030007120 | S.CER C1608 CH 1H 820J-T | B | 113.2/114.2 |
| C1421 | 4030007150 | S.CER C1608 CH 1H 151J-T | B | 115/114.2 |
| C1423 | 4030010750 | S.CER C1608 CH 1H 201J-T | B | 120.3/111.1 |
| C1424 | 4030007010 | S.CER C1608 CH 1H 100D-T | T | 132.8/103.3 |
| C1425 | 4030011600 | S.CER C1608 JB 1E 104K-T | T | 136.5/106.2 |
| C1426 | 4030011600 | S.CER C1608 JB 1E 104K-T | T | 137.8/106.2 |
| C1427 | 4030006900 | S.CER C1608 JB 1H 103K-T | T | 133.9/106.2 |
| C1428 | 4030006980 | S.CER C1608 CH 1H 070D-T | T | 119.5/109 |
| C1429 | 4030006900 | S.CER C1608 JB 1H 103K-T | T | 120.5/113.6 |
| C1430 | 4030007040 | S.CER C1608 CH 1H 180J-T | B | 131.9/115.3 |
| C1431 | 4030017810 | S.CER C1608 CH 1H 102J-T | T | 127/116.2 |
| C1432 | 4030009980 | S.CER C1608 JB 1H 152K-T | T | 129.1/114.1 |
| C1433 | 4030011600 | S.CER C1608 JB 1E 104K-T | T | 130.4/114.1 |
| C1434 | 4030009920 | S.CER C1608 CH 1H 050B-T | B | 124.7/134.4 |
| C1435 | 4030009920 | S.CER C1608 CH 1H 050B-T | B | 124.7/131.6 |
| C1436 | 4030011600 | S.CER C1608 JB 1E 104K-T | B | 137.2/122.2 |
| C1437 | 4030009920 | S.CER C1608 CH 1H 050B-T | T | 104/83.3 |
| C1438 | 4030009920 | S.CER C1608 CH 1H 050B-T | T | 102.3/86.6 |
| C1439 | 4030009920 | S.CER C1608 CH 1H 050B-T | T | 110/93.7 |
| C1441 | 4030006880 | S.CER C1608 JB 1H 472K-T | T | 120.5/116.2 |
| C1451 | 4030007020 | S.CER C1608 CH 1H 120J-T | T | 125.5/80.1 |
| C1453 | 4030007030 | S.CER C1608 CH 1H 150J-T | T | 122.1/85.1 |
| C1454 | 4030007030 | S.CER C1608 CH 1H 150J-T | T | 120.8/85.1 |
| C1456 | 4030007020 | S.CER C1608 CH 1H 120J-T | T | 125.5/90.9 |
| C1457 | 4030006900 | S.CER C1608 JB 1H 103K-T | T | 118.3/72.9 |
| C1458 | 4030006900 | S.CER C1608 JB 1H 103K-T | T | 116.6/103.5 |
| C1501 | 4030018530 | S.CER C3216 CH 1H 103J-T | T | 131.2/124.5 |
| C1502 | 4550003220 | S.TAN TEESVA 1E 105M8R | T | 132.1/139.2 |
| C1503 | 4030006900 | S.CER C1608 JB 1H 103K-T | T | 137/142.1 |
| C1504 | 4030012610 | S.CER C2012 JB 1C 474K-T | T | 136.7/140.5 |
| C1505 | 4030007010 | S.CER C1608 CH 1H 100D-T | T | 130/143.5 |
| C1506 | 4030010760 | S.CER C1608 CH 1H 331J-T | T | 131.3/146.3 |
| C1507 | 4510008540 | S.ELE EEE1CA100SR | T | 142.6/140.8 |
| C1508 | 4030011600 | S.CER C1608 JB 1E 104K-T | B | 128.8/148.8 |
| C1509 | 4030018800 | S.CER C3216 CH 1H 223J-T | T | 135.8/145.1 |
| C1510 | 4030007110 | S.CER C1608 CH 1H 680J-T | T | 136.5/158.9 |
| C1511 | 4510008540 | S.ELE EEE1CA100SR | T | 132.7/150.6 |
| C1512 | 4030011600 | S.CER C1608 JB 1E 104K-T | T | 129.6/149 |
| C1513 | 4030011600 | S.CER C1608 JB 1E 104K-T | T | 129.6/158.1 |
| C1514 | 4510008540 | S.ELE EEE1CA100SR | T | 132.7/156.5 |
| C1515 | 4030007160 | S.CER C1608 CH 1H 181J-T | T | 132.2/160.8 |
| C1516 | 4030009350 | S.CER C1608 CH 1H 3R5B-T | T | 130.9/160.8 |
| C1517 | 4030007110 | S.CER C1608 CH 1H 680J-T | T | 115.3/155 |
| C1518 | 4030018530 | S.CER C3216 CH 1H 103J-T | T | 131.2/132.8 |
| C1519 | 4550003220 | S.TAN TEESVA 1E 105M8R | T | 122.9/140.9 |
| C1520 | 4030006900 | S.CER C1608 JB 1H 103K-T | T | 119.8/140.7 |
| C1521 | 4030012610 | S.CER C2012 JB 1C 474K-T | T | 116.2/142.1 |
| C1522 | 4030007010 | S.CER C1608 CH 1H 100D-T | T | 123.7/143.5 |
| C1523 | 4030010760 | S.CER C1608 CH 1H 331J-T | T | 122.4/146.3 |
| C1524 | 4030018800 | S.CER C3216 CH 1H 223J-T | T | 117.9/145.2 |
| C1525 | 4510008540 | S.ELE EEE1CA100SR | T | 124.9/150.6 |
| C1526 | 4030011600 | S.CER C1608 JB 1E 104K-T | T | 128/149 |
| C1527 | 4030011600 | S.CER C1608 JB 1E 104K-T | T | 128/158.1 |
| C1528 | 4510008540 | S.ELE EEE1CA100SR | T | 124.9/156.5 |
| C1529 | 4030017870 | S.CER C1608 CH 1H 681J-T | T | 125.4/160.8 |

## [RXPLL-A UNIT]

| REF NO. | PARTS NO. | DESCRIPTION | M. | H/V LOCATION |
|---|---|---|---|---|
| C1530 | 4030011330 | S.CER C1608 CH 1H 391J-T | T | 126.7/160.8 |
| C1531 | 4510008500 | S.ELE EEE1CA101WP | T | 111.3/167.3 |
| C1532 | 4030011600 | S.CER C1608 JB 1E 104K-T | T | 107.1/167.3 |
| C1533 | 4030011600 | S.CER C1608 JB 1E 104K-T | T | 115.5/167.3 |
| C1534 | 4510008500 | S.ELE EEE1CA101WP | T | 119.7/167.3 |
| C1535 | 4030011600 | S.CER C1608 JB 1E 104K-T | T | 133.7/172.6 |
| C1536 | 4030017870 | S.CER C1608 CH 1H 681J-T | T | 126.2/179.5 |
| C1537 | 4510008500 | S.ELE EEE1CA101WP | T | 111.3/176 |
| C1538 | 4030011600 | S.CER C1608 JB 1E 104K-T | T | 107.1/176 |
| C1539 | 4030011600 | S.CER C1608 JB 1E 104K-T | T | 115.5/176 |
| C1540 | 4510008500 | S.ELE EEE1CA101WP | T | 119.7/176 |
| C1541 | 4030007050 | S.CER C1608 CH 1H 220J-T | T | 124/175 |
| C1651 | 4030006880 | S.CER C1608 JB 1H 472K-T | B | 105.5/144 |
| C1653 | 4030006880 | S.CER C1608 JB 1H 472K-T | B | 109/137.2 |
| C1654 | 4030017810 | S.CER C1608 CH 1H 102J-T | B | 106.9/137.2 |
| C1655 | 4030009530 | S.CER C1608 CH 1H 030B-T | T | 107.6/136.8 |
| C1656 | 4610001970 | S.TRI TZC3P200A110R00 (TZC03P200A1102) | T | 110.9/136.2 |
| C1657 | 4030010220 | S.CER C2012 CH 1H 102J-T | T | 116.4/122.7 |
| C1658 | 4030010220 | S.CER C2012 CH 1H 102J-T | T | 116.4/130.9 |
| C1659 | 4030011600 | S.CER C1608 JB 1E 104K-T | T | 107.8/120 |
| C1660 | 4030011600 | S.CER C1608 JB 1E 104K-T | B | 134/174 |
| C1661 | 4030011600 | S.CER C1608 JB 1E 104K-T | B | 145.2/171.3 |
| C1662 | 4030011600 | S.CER C1608 JB 1E 104K-T | T | 144.3/178 |
| C1663 | 4030011600 | S.CER C1608 JB 1E 104K-T | T | 135.1/170.2 |
| C1665 | 4030006900 | S.CER C1608 JB 1H 103K-T | T | 138.9/164.1 |
| C1666 | 4030006880 | S.CER C1608 JB 1H 472K-T | B | 113.3/144 |
| C1701 | 4030011600 | S.CER C1608 JB 1E 104K-T | T | 153.4/163 |
| C1702 | 4030011600 | S.CER C1608 JB 1E 104K-T | T | 144.4/163 |
| C1703 | 4510004601 | ELE 16 ME 1000 HC | | |
| C1704 | 4030011600 | S.CER C1608 JB 1E 104K-T | B | 180.1/160.2 |
| C1705 | 4030011600 | S.CER C1608 JB 1E 104K-T | B | 186.4/160.2 |
| C1706 | 4510008520 | S.ELE EEE1CA470SP | T | 172.7/154.8 |
| C1707 | 4030011600 | S.CER C1608 JB 1E 104K-T | T | 149.7/154.8 |
| C1708 | 4030006880 | S.CER C1608 JB 1H 472K-T | T | 175.7/166.8 |
| C1709 | 4030006880 | S.CER C1608 JB 1H 472K-T | T | 172.6/166.8 |
| C1710 | 4030006880 | S.CER C1608 JB 1H 472K-T | T | 169.6/166.8 |
| C1711 | 4030011340 | S.CER C1608 CH 1H 471J-T | T | 171.4/163.5 |
| C1712 | 4030011340 | S.CER C1608 CH 1H 471J-T | T | 167.5/163.5 |
| C1713 | 4030006880 | S.CER C1608 JB 1H 472K-T | B | 165.5/168.8 |
| C1714 | 4030006880 | S.CER C1608 JB 1H 472K-T | B | 153.8/141.8 |
| C1716 | 4030006880 | S.CER C1608 JB 1H 472K-T | B | 154.7/145.1 |
| C1717 | 4030006880 | S.CER C1608 JB 1H 472K-T | B | 152.9/145.1 |
| C1719 | 4030006880 | S.CER C1608 JB 1H 472K-T | B | 151.1/145.1 |
| C1720 | 4030006880 | S.CER C1608 JB 1H 472K-T | B | 155.6/141.8 |
| C1721 | 4030006880 | S.CER C1608 JB 1H 472K-T | B | 157.4/141.8 |
| RL1001 | 6330001750 | REL FTR-B4CA012Z | | |
| RL1002 | 6330001750 | REL FTR-B4CA012Z | | |
| RL1003 | 6330001750 | REL FTR-B4CA012Z | | |
| RL1004 | 6330001750 | REL FTR-B4CA012Z | | |
| RL1005 | 6330001750 | REL FTR-B4CA012Z | | |
| RL1006 | 6330001750 | REL FTR-B4CA012Z | | |
| RL1203 | 6330001750 | REL FTR-B4CA012Z | | |
| RL1206 | 6330001750 | REL FTR-B4CA012Z | | |
| J2 | 6510019991 | S.CON 52808-2271(2291) | T | 25/9 |
| J10 | 6510007020 | CON TMP-J01X-V6 | | |
| J351 | 6510007020 | CON TMP-J01X-V6 | | |
| J421 | 6510007020 | CON TMP-J01X-V6 | | |
| J561 | 6510007020 | CON TMP-J01X-V6 | | |
| J601 | 6510007020 | CON TMP-J01X-V6 | | |
| J681 | 6510007020 | CON TMP-J01X-V6 | | |
| J831 | 6510007020 | CON TMP-J01X-V6 | | |
| J1001 | 6510007020 | CON TMP-J01X-V6 | | |
| J1002 | 6510007020 | CON TMP-J01X-V6 | | |
| J1101 | 6510007020 | CON TMP-J01X-V6 | | |
| J1201 | 6510007020 | CON TMP-J01X-V6 | | |
| J1301 | 6510007020 | CON TMP-J01X-V6 | | |
| J1501 | 6510018961 | S.CON B2B-PH-SM4-TB(LF)(SN) | T | 149.6/177.5 |
| J1701 | 6510019981 | S.CON 52808-1671(1690) | T | 168/177.2 |
| W1052 | 9016201006 | WIR 73/98/025/X98/X98 | | |
| W1401 | 9029495075 | JUM 73/98/020/X98/X98 | | |
| W1411 | 7120000480 | S.JUM MJP-0.4-T | T | 125.1/111.6 |
| EP20 | 6910012350 | S.BEA MMZ1608Y 102BT | T | 85.4/126 |
| EP21 | 6910012350 | S.BEA MMZ1608Y 102BT | T | 88.7/124 |
| EP22 | 6910012350 | S.BEA MMZ1608Y 102BT | T | 90/124 |
| EP101 | 6910012350 | S.BEA MMZ1608Y 102BT | B | 47.6/98.6 |
| EP102 | 6910012350 | S.BEA MMZ1608Y 102BT | B | 47.6/96.8 |
| EP103 | 6910012350 | S.BEA MMZ1608Y 102BT | T | 46/96.8 |
| EP104 | 6910012350 | S.BEA MMZ1608Y 102BT | T | 46/92.9 |
| EP105 | 6910012350 | S.BEA MMZ1608Y 102BT | T | 46/91.6 |
| EP106 | 6910012350 | S.BEA MMZ1608Y 102BT | T | 46/89 |
| EP107 | 6910012350 | S.BEA MMZ1608Y 102BT | B | 47.6/100.4 |
| EP108 | 6910012350 | S.BEA MMZ1608Y 102BT | B | 47.6/102.2 |
| EP1701 | 6910012350 | S.BEA MMZ1608Y 102BT | T | 170.1/163.5 |
| EP1702 | 6910012350 | S.BEA MMZ1608Y 102BT | T | 168.8/163.5 |
| EP1801 | 6910012350 | S.BEA MMZ1608Y 102BT | B | 153/132.7 |
| EP1802 | 6910012350 | S.BEA MMZ1608Y 102BT | B | 142.5/18.8 |
| EP1804 | 6910012350 | S.BEA MMZ1608Y 102BT | B | 112.5/138.7 |
| EP1805 | 6910012350 | S.BEA MMZ1608Y 102BT | B | 150.2/141.8 |
| EP1806 | 6910012350 | S.BEA MMZ1608Y 102BT | B | 128.6/64.3 |
| EP1807 | 6910012350 | S.BEA MMZ1608Y 102BT | B | 117.4/50.2 |
| EP1808 | 6910012350 | S.BEA MMZ1608Y 102BT | B | 137/166.9 |
| EP1809 | 6910012350 | S.BEA MMZ1608Y 102BT | B | 147.4/127.4 |
| EP1810 | 6910012350 | S.BEA MMZ1608Y 102BT | B | 131.3/64.2 |
| EP1811 | 6910012350 | S.BEA MMZ1608Y 102BT | T | 160.7/56.3 |
| EP1812 | 6910012350 | S.BEA MMZ1608Y 102BT | B | 153.5/137.4 |
| EP1813 | 6910012350 | S.BEA MMZ1608Y 102BT | B | 132.6/65.7 |

M.=Mounted side (T: Mounted on the Top side, B: Mounted on the Bottom side)
S.=Surface mount

## [RXPLL-A UNIT]

| REF NO. | PARTS NO. | DESCRIPTION | M. | H/V LOCATION |
|---|---|---|---|---|
| EP1814 | 6910012350 | S.BEA MMZ1608Y 102BT | B | 147.2/22.3 |
| EP1815 | 6910012350 | S.BEA MMZ1608Y 102BT | B | 156/62.6 |
| EP1816 | 6910012350 | S.BEA MMZ1608Y 102BT | B | 160.4/20.9 |
| EP1817 | 6910012350 | S.BEA MMZ1608Y 102BT | B | 168.6/62.2 |
| EP1818 | 6910012350 | S.BEA MMZ1608Y 102BT | B | 151.2/133.2 |
| EP1819 | 6910012350 | S.BEA MMZ1608Y 102BT | B | 145.6/127.9 |
| EP1820 | 6910012350 | S.BEA MMZ1608Y 102BT | B | 148.6/19.8 |
| EP1821 | 6910012350 | S.BEA MMZ1608Y 102BT | B | 148.6/14.1 |
| EP1825 | 6910012350 | S.BEA MMZ1608Y 102BT | B | 126.6/7 |
| EP1826 | 6910012350 | S.BEA MMZ1608Y 102BT | B | 151.5/137.7 |
| EP1830 | 6910012350 | S.BEA MMZ1608Y 102BT | B | 141.3/135.2 |
| EP1831 | 6910012350 | S.BEA MMZ1608Y 102BT | B | 143.4/128.5 |
| EP1832 | 6910012350 | S.BEA MMZ1608Y 102BT | B | 149.2/137.5 |
| EP1833 | 6910012350 | S.BEA MMZ1608Y 102BT | B | 147.2/133.5 |
| EP1834 | 6910012350 | S.BEA MMZ1608Y 102BT | T | 115.8/108.3 |
| EP1835 | 6910012350 | S.BEA MMZ1608Y 102BT | B | 141.6/128.5 |
| EP1836 | 6910012350 | S.BEA MMZ1608Y 102BT | T | 111/110.2 |
| EP1837 | 6910012350 | S.BEA MMZ1608Y 102BT | B | 145.8/134.1 |
| EP1838 | 6910012350 | S.BEA MMZ1608Y 102BT | T | 116.3/106.1 |
| MP1505 | 8510010460 | PLA 1691 MAIN SHIELD PLATE Y295 | B | 143.8/68.2 |

## [RXPLL-B UNIT]

| REF NO. | PARTS NO. | DESCRIPTION | M. | H/V LOCATION |
|---|---|---|---|---|
| IC1 | 1130011530 | S.IC CD74HC4094M96 | T | 11.9/24.1 |
| IC2 | 1130009691 | S.IC TC74HCT7007AF(F) S | T | 22.8/23.3 |
| IC51 | 1180001252 | S.IC TA7808F NQ | T | 77/16.7 |
| IC61 | 1180000421 | S.IC TA78L05F(TE12R,F) | B | 56.5/16 |
| IC101 | 1140007881 | S.IC TC190G08EFG0046 JDZ/SC1246A | T | 31.3/89.7 |
| IC102 | 1130003831 | S.IC TC7S04F(TE85R,F) [USA] | T | 33.1/74.7 |
| | 1130003831 | S.IC TC7S04F(TE85R,F) [EUR] | | |
| | 1130003831 | S.IC TC7S04F(TE85R,F) [FRA] | | |
| | 1130003831 | S.IC TC7S04F(TE85R,F) [DEN] | | |
| | 1130003831 | S.IC TC7S04F(TE85R,F) [ITR] | | |
| | 1130003831 | S.IC TC7S04F(TE85R,F) [KOR] | | |
| | 1130003830 | S.IC TC7S04F (TE85R) [ESP] | | |
| | 1130003830 | S.IC TC7S04F (TE85R) [AUS] | | |
| | 1130003831 | S.IC TC7S04F(TE85R,F) [UK] | | |
| | 1130003831 | S.IC TC7S04F(TE85R,F) [RX] | | |
| | 1130003831 | S.IC TC7S04F(TE85R,F) [CHN] | | |
| IC104 | 1130003831 | S.IC TC7S04F(TE85R,F) [USA] | T | 31.7/101.1 |
| | 1130003831 | S.IC TC7S04F(TE85R,F) [EUR] | | |
| | 1130003831 | S.IC TC7S04F(TE85R,F) [FRA] | | |
| | 1130003831 | S.IC TC7S04F(TE85R,F) [DEN] | | |
| | 1130003831 | S.IC TC7S04F(TE85R,F) [ITR] | | |
| | 1130003831 | S.IC TC7S04F(TE85R,F) [KOR] | | |
| | 1130003830 | S.IC TC7S04F (TE85R) [ESP] | | |
| | 1130003830 | S.IC TC7S04F (TE85R) [AUS] | | |
| | 1130003831 | S.IC TC7S04F(TE85R,F) [UK] | | |
| | 1130003831 | S.IC TC7S04F(TE85R,F) [RX] | | |
| | 1130003831 | S.IC TC7S04F(TE85R,F) [CHN] | | |
| IC201 | 1130009230 | S.IC LMX2306TMX/NOPB | T | 27.9/38.8 |
| IC501 | 1140007881 | S.IC TC190G08EFG00 46JDZ/SC1246A | T | 31.3/142.5 |
| IC502 | 1130003831 | S.IC TC7S04F(TE85R,F) [USA] | T | 24.8/127.4 |
| | 1130003831 | S.IC TC7S04F(TE85R,F) [EUR] | | |
| | 1130003831 | S.IC TC7S04F(TE85R,F) [FRA] | | |
| | 1130003831 | S.IC TC7S04F(TE85R,F) [DEN] | | |
| | 1130003831 | S.IC TC7S04F(TE85R,F) [ITR] | | |
| | 1130003831 | S.IC TC7S04F(TE85R,F) [KOR] | | |
| | 1130003830 | S.IC TC7S04F (TE85R) [ESP] | | |
| | 1130003830 | S.IC TC7S04F (TE85R) [AUS] | | |
| | 1130003831 | S.IC TC7S04F(TE85R,F) [UK] | | |
| | 1130003831 | S.IC TC7S04F(TE85R,F) [RX] | | |
| | 1130003831 | S.IC TC7S04F(TE85R,F) [CHN] | | |
| IC503 | 1130003831 | S.IC TC7S04F(TE85R,F) [USA] | T | 31.7/154.1 |
| | 1130003831 | S.IC TC7S04F(TE85R,F) [EUR] | | |
| | 1130003831 | S.IC TC7S04F(TE85R,F) [FRA] | | |
| | 1130003831 | S.IC TC7S04F(TE85R,F) [DEN] | | |
| | 1130003831 | S.IC TC7S04F(TE85R,F) [ITR] | | |
| | 1130003831 | S.IC TC7S04F(TE85R,F) [KOR] | | |
| | 1130003830 | S.IC TC7S04F (TE85R) [ESP] | | |
| | 1130003830 | S.IC TC7S04F (TE85R) [AUS] | | |
| | 1130003831 | S.IC TC7S04F(TE85R,F) [UK] | | |
| | 1130003831 | S.IC TC7S04F(TE85R,F) [RX] | | |
| | 1130003831 | S.IC TC7S04F(TE85R,F) [CHN] | | |
| IC651 | 1140004550 | S.IC M65343FP/SC1287 | T | 22.6/169.2 |
| IC652 | 1130003831 | S.IC TC7S04F(TE85R,F) [USA] | T | 13.7/163.7 |
| | 1130003831 | S.IC TC7S04F(TE85R,F) [EUR] | | |
| | 1130003831 | S.IC TC7S04F(TE85R,F) [FRA] | | |
| | 1130003831 | S.IC TC7S04F(TE85R,F) [DEN] | | |
| | 1130003831 | S.IC TC7S04F(TE85R,F) [ITR] | | |
| | 1130003831 | S.IC TC7S04F(TE85R,F) [KOR] | | |
| | 1130003830 | S.IC TC7S04F (TE85R) [ESP] | | |
| | 1130003830 | S.IC TC7S04F (TE85R) [AUS] | | |
| | 1130003831 | S.IC TC7S04F(TE85R,F) [UK] | | |
| | 1130003831 | S.IC TC7S04F(TE85R,F) [RX] | | |
| | 1130003831 | S.IC TC7S04F(TE85R,F) [CHN] | | |
| IC1051 | 1190002010 | S.IC SD5400CY <TOMO> | T | 176.9/99.9 |
| IC1081 | 1110006180 | S.IC UPG2009TB-E3 | B | 151.6/85.1 |
| IC1402 | 1190002110 | S.IC NJG1519KC1-TE3-#ZZZB | T | 117.3/69.5 |
| IC1403 | 1190002110 | S.IC NJG1519KC1-TE3-#ZZZB | T | 113.4/106.3 |
| IC1501 | 1110006121 | S.IC DBM9A41-G-TR | T | 121.2/124.5 |
| IC1502 | 1110006121 | S.IC DBM9A41-G-TR | T | 121.2/133 |
| IC1503 | 1110006100 | S.IC NJM5534MD-TE1-#ZZZB | T | 138.4/151.7 |
| IC1504 | 1110006100 | S.IC NJM5534MD-TE1-#ZZZB | T | 119.2/151.7 |
| IC1505 | 1110006190 | S.IC NJM074M-TE1-#ZZZB | T | 128.8/166.9 |
| IC1506 | 1110006100 | S.IC NJM5534MD-TE1-#ZZZB | T | 128.8/175.6 |
| IC1651 | 1130011921 | S.IC TC74LCX00F(EL,F) | T | 110/126.2 |
| IC1652 | 1110005420 | S.IC BA15532F-E2 | T | 139.8/175.6 |
| IC1653 | 1110005100 | S.IC NJM072BM-TE1-#ZZZB | B | 140/172 |
| IC1701 | 1130011530 | S.IC CD74HC4094M96 | T | 158/166.7 |
| IC1702 | 1130011530 | S.IC CD74HC4094M96 | T | 148.9/166.7 |
| IC1703 | 1160000131 | S.IC TD62783AFG(5,S,EL) | T | 157.3/154.8 |
| IC1704 | 1180000790 | S.IC AN78L10M(E1) | B | 183.2/159.8 |
| Q1 | 1590001050 | S.TRA DTC114TUA T106 | B | 30.3/22.6 |
| Q30 | 1530002060 | S.TRA 2SC4081 T106 R | T | 22.3/110.9 |
| Q41 | 1590000680 | S.TRA DTC114EUA T106 | T | 12.8/34.2 |
| Q150 | 1560000331 | S.FET 2SK210-GR(TE85R,F) | T | 26.9/53 |
| Q151 | 1530002280 | S.TRA 2SC4081 T106 S | B | 33.6/57.2 |
| Q152 | 1530002280 | S.TRA 2SC4081 T106 S | B | 30.8/78.2 |
| Q201 | 1590001330 | S.TRA DTA114EUA T106 | T | 29.6/34.1 |
| Q220 | 1560000331 | S.FET 2SK210-GR(TE85R,F) | T | 72.5/33.9 |
| Q230 | 1560000331 | S.FET 2SK210-GR(TE85R,F) | T | 72.5/46.4 |
| Q240 | 1560000331 | S.FET 2SK210-GR(TE85R,F) | T | 72.5/58.9 |
| Q250 | 1560000331 | S.FET 2SK210-GR(TE85R,F) | T | 72.5/71.4 |
| Q260 | 1560000331 | S.FET 2SK210-GR(TE85R,F) | T | 72.5/83.9 |
| Q270 | 1560000331 | S.FET 2SK210-GR(TE85R,F) | T | 72.5/95.8 |
| Q280 | 1590000680 | S.TRA DTC114EUA T106 | T | 82.3/34.4 |
| Q281 | 1590000680 | S.TRA DTC114EUA T106 | T | 82.3/46.9 |
| Q282 | 1590000680 | S.TRA DTC114EUA T106 | T | 82.3/59.4 |
| Q283 | 1590000680 | S.TRA DTC114EUA T106 | T | 82.3/71.9 |
| Q284 | 1590000680 | S.TRA DTC114EUA T106 | T | 82.3/84.4 |
| Q285 | 1590000680 | S.TRA DTC114EUA T106 | T | 82.3/96.4 |
| Q301 | 1530003432 | S.TRA 2SC5226A-4-TL-E | T | 92.1/30.1 |
| Q302 | 1530003432 | S.TRA 2SC5226A-4-TL-E | B | 89.1/42.5 |

M.=Mounted side (T: Mounted on the Top side, B: Mounted on the Bottom side)
S.=Surface mount

## [RXPLL-B UNIT]

| REF NO. | PARTS NO. | DESCRIPTION | | M. | H/V LOCATION |
|---|---|---|---|---|---|
| Q303 | 1530003432 | S.TRA | 2SC5226A-4-TL-E | B | 91.3/25.1 |
| Q341 | 1590000680 | S.TRA | DTC114EUA T106 | T | 86.3/36.7 |
| Q351 | 1580000751 | S.FET | 3SK294(TE85L,F) | T | 92.1/56.9 |
| Q352 | 1530003432 | S.TRA | 2SC5226A-4-TL-E | B | 89.2/64.5 |
| Q363 | 1590000680 | S.TRA | DTC114EUA T106 | T | 86.8/54.3 |
| Q364 | 1590001330 | S.TRA | DTA114EUA T106 | T | 86.8/57.4 |
| Q441 | 1590000680 | S.TRA | DTC114EUA T106 | T | 86.5/73.7 |
| Q502 | 1590000680 | S.TRA | DTC114EUA T106 | T | 41.9/128.8 |
| Q540 | 1530002060 | S.TRA | 2SC4081 T106 R | B | 58.7/141.2 |
| Q541 | 1560000331 | S.FET | 2SK210-GR(TE85R,F) | T | 68.9/142.8 |
| Q561 | 1530003432 | S.TRA | 2SC5226A-4-TL-E | T | 70.6/153.8 |
| Q580 | 1530003432 | S.TRA | 2SC5226A-4-TL-E | T | 41.7/147.4 |
| Q591 | 1530003151 | S.TRA | 2SC4673D-TD-E | T | 61.7/166.5 |
| Q592 | 1520000561 | S.TRA | 2SB1123 T-TD-E | B | 52/165.3 |
| Q593 | 1590000680 | S.TRA | DTC114EUA T106 | B | 54.8/171.2 |
| Q601 | 1530002601 | S.TRA | 2SC4215-O(TE85R,F) | T | 49.5/118.2 |
| Q680 | 1530002060 | S.TRA | 2SC4081 T106 R | T | 37.5/163.2 |
| Q702 | 1530002601 | S.TRA | 2SC4215-O(TE85R,F) | T | 31.4/110.9 |
| Q1001 | 1530003851 | S.TRA | 2SC5551A-F-E | B | 174/9 |
| Q1004 | 1590001960 | S.TRA | XP4311(TX) | T | 150/18.8 |
| Q1005 | 1590001960 | S.TRA | XP4311(TX) | T | 145.9/18.8 |
| Q1006 | 1530003851 | S.TRA | 2SC5551A-F-E | B | 150/37.6 |
| Q1007 | 1530003851 | S.TRA | 2SC5551A-F-E | B | 176.5/42.5 |
| Q1008 | 1530003851 | S.TRA | 2SC5551A-F-E | B | 160.5/42.5 |
| Q1101 | 1530003860 | TRA | 2SC3950D | | |
| Q1102 | 1590000680 | S.TRA | DTC114EUA T106 | T | 165.5/133.8 |
| Q1103 | 1520000561 | S.TRA | 2SB1123 T-TD-E | B | 168.6/127.8 |
| Q1104 | 1530003860 | TRA | 2SC3950D | | |
| Q1105 | 1530003842 | S.TRA | 2SC5501A-4-TR-E | T | 166.5/142.1 |
| Q1205 | 1590001960 | S.TRA | XP4311(TX) | T | 158.8/55.6 |
| Q1209 | 1530003851 | S.TRA | 2SC5551A-F-E | B | 121/34.9 |
| Q1210 | 1530003851 | S.TRA | 2SC5551A-F-E | B | 111.5/34.9 |
| Q1211 | 1560001311 | S.FET | MMBFU310LT1G | T | 159.5/96.4 |
| Q1212 | 1560001311 | S.FET | MMBFU310LT1G | T | 153.5/96.4 |
| Q1213 | 1590000680 | S.TRA | DTC114EUA T106 | B | 156.9/123.7 |
| Q1214 | 1520000561 | S.TRA | 2SB1123 T-TD-E | B | 155.4/113.5 |
| Q1301 | 1530003151 | S.TRA | 2SC4673D-TD-E | T | 157.8/120 |
| Q1352 | 1530003851 | S.TRA | 2SC5551A-F-E | B | 140/66.7 |
| Q1401 | 1530003842 | S.TRA | 2SC5501A-4-TR-E | T | 131.9/105.8 |
| Q1402 | 1530003021 | S.TRA | 2SC4402-3-TL-E | T | 123.4/111.8 |
| Q1403 | 1530003021 | S.TRA | 2SC4402-3-TL-E | T | 123.4/114.3 |
| Q1501 | 1530003450 | S.TRA | 2SC4835G R(TX) | T | 133.5/143.5 |
| Q1502 | 1530003450 | S.TRA | 2SC4835G R(TX) | T | 120.4/143.5 |
| Q1651 | 1530002601 | S.TRA | 2SC4215-O(TE85R,F) | B | 105.6/140.3 |
| Q1701 | 1590001960 | S.TRA | XP4311(TX) | T | 106.6/43.9 |
| Q1702 | 1590001960 | S.TRA | XP4311(TX) | T | 148.9/147.2 |
| Q1703 | 1590001960 | S.TRA | XP4311(TX) | T | 146.4/147.2 |
| D101 | 1750000520 | S.DIO | DAN222TL | T | 41.8/86.2 |
| D152 | 1720000590 | S.VAR | MA357(TX) | T | 17.6/59.9 |
| D153 | 1790000491 | S.DIO | HSM88ASTR-E | T | 27.2/60.4 |
| D154 | 1790000491 | S.DIO | HSM88ASTR-E | T | 27.2/63.8 |
| D201 | 1750000520 | S.DIO | DAN222TL | T | 32.4/34.1 |
| D220 | 1720000590 | S.VAR | MA357(TX) | T | 50.8/31.8 |
| D221 | 1720000590 | S.VAR | MA357(TX) | T | 52.9/31.8 |
| D222 | 1790000620 | S.DIO | MA77(TX) | T | 82.6/29.8 |
| D230 | 1720000590 | S.VAR | MA357(TX) | T | 50.8/44.2 |
| D231 | 1720000590 | S.VAR | MA357(TX) | T | 52.9/44.2 |
| D232 | 1790000620 | S.DIO | MA77(TX) | T | 82.6/42.3 |
| D240 | 1720000590 | S.VAR | MA357(TX) | T | 50.8/56.7 |
| D241 | 1720000590 | S.VAR | MA357(TX) | T | 52.9/56.7 |
| D242 | 1790000620 | S.DIO | MA77(TX) | T | 82.6/54.8 |
| D250 | 1720000590 | S.VAR | MA357(TX) | T | 50.8/69.2 |
| D252 | 1790000620 | S.DIO | MA77(TX) | T | 82.6/67.3 |
| D261 | 1720000590 | S.VAR | MA357(TX) | T | 52.9/81.7 |
| D262 | 1790000620 | S.DIO | MA77(TX) | T | 82.6/79.8 |
| D270 | 1720000590 | S.VAR | MA357(TX) | T | 50.8/94.2 |
| D271 | 1720000590 | S.VAR | MA357(TX) | T | 52.4/96.7 |
| D272 | 1790000620 | S.DIO | MA77(TX) | T | 82.5/92 |
| D341 | 1790000620 | S.DIO | MA77(TX) | T | 90/37.2 |
| D342 | 1160000070 | S.DIO | DAN202K T146 | B | 81.1/47.7 |
| D362 | 1790000620 | S.DIO | MA77(TX) | T | 88.3/65.5 |
| D363 | 1790000620 | S.DIO | MA77(TX) | T | 88.3/62 |
| D421 | 1790000620 | S.DIO | MA77(TX) | T | 91.9/85 |
| D441 | 1790000620 | S.DIO | MA77(TX) | T | 89.6/74.4 |
| D501 | 1750000520 | S.DIO | DAN222TL | T | 42/132 |
| D542 | 1720000590 | S.VAR | MA357(TX) | T | 62.5/139.6 |
| D1101 | 1790000620 | S.DIO | MA77(TX) | T | 177.6/146.6 |
| D1102 | 1790000620 | S.DIO | MA77(TX) | T | 177.6/148.4 |
| D1351 | 1750000581 | S.DIO | 1SV307(TPH3,F) | T | 140.8/71.1 |
| D1653 | 1750000550 | S.DIO | 1SS355 TE-17 | T | 138.9/167.2 |
| D1654 | 1750000550 | S.DIO | 1SS355 TE-17 | T | 142.5/167.2 |
| D1701 | 1790001670 | S.DIO | RB706F-40T106 | T | 170.5/160.8 |
| FI101 | 2020002090 | S.CER | SFECV10M7FD00-R0 (SFECV10.7MA5S) | T | 26/73.9 |
| FI1401 | 2030000321 | S.MON | DSF753SDF 64.555 MHz (FL-359A) | T | 116.3/88.5 |
| FI1402 | 2030000311 | S.MON | DSF753SDF 64.555 MHz (FL-360A) | T | 107/88.5 |
| FI1403 | 2030000520 | S.MON | DSF753SDF 64.555 MHz (FL-397) | T | 126/85.5 |
| L1 | 6200003261 | S.COI | NLV32T-101J | T | 10.8/15.4 |
| L2 | 6200003261 | S.COI | NLV32T-101J | T | 29/19.9 |
| L10 | 6200003950 | S.COI | HF50ACC 322513-T | T | 38.6/14.7 |
| L11 | 6200003950 | S.COI | HF50ACC 322513-T | T | 13.8/15.4 |
| L12 | 6200003950 | S.COI | HF50ACC 322513-T | T | 16.8/15.4 |
| L13 | 6200003950 | S.COI | HF50ACC 322513-T | T | 29/15.4 |
| L20 | 6200003321 | S.COI | NLV32T-3R3J | T | 85.9/123.8 |
| L30 | 6200005491 | S.COI | NLV32T-331J | T | 20.6/120 |
| L101 | 6200001831 | S.COI | NLV32T-100J | T | 38.3/72.8 |
| L151 | 6130002970 | COI | LB-343 | | |

## [RXPLL-B UNIT]

| REF NO. | PARTS NO. | DESCRIPTION | | M. | H/V LOCATION |
|---|---|---|---|---|---|
| L152 | 6200001831 | S.COI | NLV32T-100J | T | 30/54.5 |
| L201 | 6200005011 | S.COI | NLV25T-100J | T | 22.2/45 |
| L211 | 6200003661 | S.COI | NLV25T-R68J | B | 45.4/35.3 |
| L220 | 6200010790 | S.COI | C2520C-3R9G-A | T | 51.9/37.5 |
| L221 | 6190001421 | COI | #E526GN-110502 | | |
| L222 | 6200010790 | S.COI | C2520C-3R9G-A | T | 76.2/37.7 |
| L230 | 6200010830 | S.COI | C2520C-3R3G-A | T | 51.9/50 |
| L231 | 6190001421 | COI | #E526GN-110502 | | |
| L232 | 6200010830 | S.COI | C2520C-3R3G-A | T | 76.2/50.2 |
| L240 | 6200010830 | S.COI | C2520C-3R3G-A | T | 51.9/62.4 |
| L241 | 6190001421 | COI | #E526GN-110502 | | |
| L242 | 6200010830 | S.COI | C2520C-3R3G-A | T | 76.2/62.7 |
| L250 | 6200010820 | S.COI | C2520C-2R7G-A | T | 51.9/74.9 |
| L251 | 6190001421 | COI | #E526GN-110502 | | |
| L252 | 6200010820 | S.COI | C2520C-2R7G-A | T | 76.2/75.2 |
| L260 | 6200010820 | S.COI | C2520C-2R7G-A | T | 51.9/87.4 |
| L261 | 6190001411 | COI | #E526GN-110501 | | |
| L262 | 6200010820 | S.COI | C2520C-2R7G-A | T | 76.2/87.7 |
| L270 | 6200010810 | S.COI | C2520C-2R2G-A | T | 51.9/99.8 |
| L271 | 6190001411 | COI | #E526GN-110501 | | |
| L272 | 6200010810 | S.COI | C2520C-2R2G-A | T | 76/100.2 |
| L280 | 6200005011 | S.COI | NLV25T-100J | T | 67.4/25.5 |
| L302 | 6200001831 | S.COI | NLV32T-100J | T | 89.3/42.6 |
| L331 | 6200002641 | S.COI | NLV25T-R15J | T | 95.1/34.1 |
| L332 | 6200002411 | S.COI | NLV25T-056J | B | 93.2/36 |
| L341 | 6200003261 | S.COI | NLV32T-101J | T | 87/39.6 |
| L351 | 6200001831 | S.COI | NLV32T-100J | T | 91.3/62 |
| L421 | 6200008641 | S.COI | NLV32T-391J | T | 87/81 |
| L441 | 6200002601 | S.COI | NLV25T-047J | T | 91.9/72.3 |
| L442 | 6200010730 | S.COI | C2520C-68NG-A | T | 90.5/78.2 |
| L451 | 6200002641 | S.COI | NLV25T-R15J | T | 95/81 |
| L452 | 6200003261 | S.COI | NLV32T-101J | T | 87/78 |
| L501 | 6200001831 | S.COI | NLV32T-100J | T | 31/125.8 |
| L530 | 6200003171 | S.COI | NLV32T-330J | T | 14.6/134.9 |
| L531 | 6200003171 | S.COI | NLV32T-330J | T | 14.6/130.8 |
| L532 | 6200003171 | S.COI | NLV32T-330J | T | 15.5/127.1 |
| L541 | 6200010790 | S.COI | C2520C-3R9G-A | T | 56.3/139.6 |
| L542 | 6190001421 | COI | #E526GN-110502 | | |
| L543 | 6200010790 | S.COI | C2520C-3R9G-A | T | 68.4/147.9 |
| L544 | 6200003261 | S.COI | NLV32T-101J | B | 65.9/142.1 |
| L545 | 6200003261 | S.COI | NLV32T-101J | B | 51.3/139.6 |
| L561 | 6200003261 | S.COI | NLV32T-101J | B | 64/156 |
| L562 | 6200001831 | S.COI | NLV32T-100J | B | 74.6/151.8 |
| L565 | 6150004250 | COI | LS-471A (C-14922) | | |
| L566 | 6150004250 | COI | LS-471A (C-14922) | | |
| L591 | 6200007790 | S.COI | LQW2BHNR15J03L | T | 60.5/171.5 |
| L601 | 6200001831 | S.COI | NLV32T-100J | T | 49.5/123.6 |
| L602 | 6200002641 | S.COI | NLV25T-R15J | T | 54.1/118 |
| L603 | 6200002841 | S.COI | NLV25T-R22J | T | 57.1/117.2 |
| L651 | 6200001831 | S.COI | NLV32T-100J | T | 15.5/176.3 |
| L681 | 6200002981 | S.COI | NLV32T-R56J | T | 37.4/176.2 |
| L682 | 6200003041 | S.COI | NLV32T-R68J | T | 37.8/172.6 |
| L683 | 6200003051 | S.COI | NLV32T-R82J | T | 40.2/166.2 |
| L701 | 6200003261 | S.COI | NLV32T-101J | T | 23.6/120 |
| L702 | 6150004971 | S.COI | LS-522-LF | T | 37.6/108.6 |
| L703 | 6150004971 | S.COI | LS-522-LF | T | 37.5/118.5 |
| L1001 | 6190001650 | COI | ELC06D102E | | |
| L1002 | 6140004400 | COI | LR-499 | | |
| L1004 | 6140003890 | COI | LR-488 | | |
| L1005 | 6180001000 | COI | LAL 04NA 102K | | |
| L1006 | 6140003900 | COI | LR-489 | | |
| L1007 | 6140003800 | COI | LR-439 | | |
| L1008 | 6190001650 | COI | ELC06D102E | | |
| L1009 | 6190001650 | COI | ELC06D102E | | |
| L1010 | 6140003880 | COI | LR-486 | | |
| L1011 | 6140003880 | COI | LR-486 | | |
| L1012 | 6140003800 | COI | LR-439 | | |
| L1013 | 6200010680 | S.COI | C2520C-R22G-A (0.22U) | T | 155/55.2 |
| L1014 | 6200010680 | S.COI | C2520C-R22G-A (0.22U) | T | 157.9/12.4 |
| L1015 | 6200007790 | S.COI | LQW2BHNR15J03L | B | 163.5/27.5 |
| L1052 | 6200010740 | S.COI | C2520C-R27G-A | T | 177.8/74.6 |
| L1053 | 6200010740 | S.COI | C2520C-R27G-A | T | 173.8/73.5 |
| L1054 | 6200010740 | S.COI | C2520C-R27G-A | T | 169.4/72.6 |
| L1055 | 6140003960 | COI | LR-495 | | |
| L1056 | 6200010730 | S.COI | C2520C-68NG-A | T | 171/83.8 |
| L1058 | 6190001631 | COI | #E544EN-100021 | | |
| L1060 | 6200010730 | S.COI | C2520C-68NG-A | T | 149.1/76.4 |
| L1062 | 6200011450 | S.COI | C2520C-R39G-A | T | 145.1/81.4 |
| L1063 | 6200010650 | S.COI | C2520C-R12G-A (0.12U) | T | 140.9/82.5 |
| L1071 | 6200007780 | S.COI | LQW2BHNR12J03L | B | 164.9/79.2 |
| L1072 | 6200007780 | S.COI | LQW2BHNR12J03L | B | 168/76.1 |
| L1091 | 6200003950 | S.COI | HF50ACC 322513-T | B | 171/149 |
| L1092 | 6200003950 | S.COI | HF50ACC 322513-T | T | 149.7/136.5 |
| L1093 | 6200003950 | S.COI | HF50ACC 322513-T | T | 157/135.2 |
| L1101 | 6140003920 | COI | LR-491 | | |
| L1102 | 6200010650 | S.COI | C2520C-R12G-A (0.12U) | T | 176.9/117.9 |
| L1103 | 6180001250 | COI | LAL 04NA 3R3K | | |
| L1104 | 6200010870 | S.COI | C2520C-R33G-A (0.33U) | T | 178.3/135.9 |
| L1105 | 6140003910 | COI | LR-490 | | |
| L1151 | 6140004640 | COI | LR-519 | | |
| L1201 | 6200007780 | S.COI | LQW2BHNR12J03L | B | 119.3/17.4 |
| L1208 | 6140003800 | COI | LR-439 | | |
| L1209 | 6200001831 | S.COI | NLV32T-100J | T | 121.1/20.8 |
| L1210 | 6140004440 | COI | LR-503 | | |
| L1211 | 6200009690 | S.COI | LQH43CN101K03L | T | 115.7/34.6 |
| L1212 | 6200001831 | S.COI | NLV32T-100J | T | 106.8/20.8 |
| L1213 | 6140004440 | COI | LR-503 | | |
| L1214 | 6200009690 | S.COI | LQH43CN101K03L | T | 105.9/34.8 |
| L1216 | 6140003800 | COI | LR-439 | | |
| L1217 | 6200007750 | S.COI | LQW2BHN56NJ03L | T | 147.9/63.7 |
| L1218 | 6200007770 | S.COI | LQW2BHNR10J03L | T | 153.3/65.1 |
| L1219 | 6200007790 | S.COI | LQW2BHNR15J03L | T | 153.2/68.4 |
| L1220 | 6140000930 | COI | LR-116 | | |
| L1221 | 6200003261 | S.COI | NLV32T-101J | B | 149.5/110.9 |
| L1222 | 6150005460 | COI | LS-559 | | |

M.=Mounted side (T: Mounted on the Top side, B: Mounted on the Bottom side)
S.=Surface mount

## [RXPLL-B UNIT]

| REF NO. | PARTS NO. | DESCRIPTION | | M. | H/V LOCATION |
|---|---|---|---|---|---|
| L1223 | 6200007750 | S.COI | LQW2BHN56NJ03L | B | 151.3/100.7 |
| L1228 | 6200010870 | S.COI | C2520C-R33G-A (0.33U) | T | 158.7/71.3 |
| L1229 | 6200003950 | S.COI | HF50ACC 322513-T | B | 164.7/115 |
| L1301 | 6200008090 | S.COI | LQW2BHN68NJ03L | T | 157.1/111.9 |
| L1302 | 6200008090 | S.COI | LQW2BHN68NJ03L | T | 156.4/115.5 |
| L1303 | 6200008090 | S.COI | LQW2BHN68NJ03L | T | 153.4/117.5 |
| L1304 | 6200010870 | S.COI | C2520C-R33G-A (0.33U) | T | 153.8/123 |
| L1305 | 6200003001 | S.COI | NLV32T-R22J | T | 159.2/124.5 |
| L1306 | 6200001831 | S.COI | NLV32T-100J | B | 152.7/118.6 |
| L1307 | 6200003001 | S.COI | NLV32T-R22J | T | 153.3/112 |
| L1351 | 6200001831 | S.COI | NLV32T-100J | T | 143/76.4 |
| L1353 | 6200010740 | S.COI | C2520C-R27G-A | T | 141.6/67.5 |
| L1354 | 6200001831 | S.COI | NLV32T-100J | T | 136.4/68 |
| L1401 | 6150004280 | COI | LS-484B (C-14927) | | |
| L1402 | 6150004280 | COI | LS-484B (C-14927) | | |
| L1403 | 6150004280 | COI | LS-484B (C-14927) | | |
| L1404 | 6150004280 | COI | LS-484B (C-14927) | | |
| L1405 | 6200007770 | S.COI | LQW2BHNR10J03L | B | 112.5/111.4 |
| L1406 | 6200007750 | S.COI | LQW2BHN56NJ03L | B | 116.6/111.4 |
| L1407 | 6140003930 | COI | LR-492 | | |
| L1408 | 6190001621 | COI | #E544EN-100028 | | |
| L1409 | 6200003191 | S.COI | NLV32T-470J | B | 135.8/125.4 |
| L1410 | 6150004280 | COI | LS-484B (C-14927) | | |
| L1411 | 6150004280 | COI | LS-484B (C-14927) | | |
| L1501 | 6200003520 | S.COI | ELJFB 102K-F | T | 142.1/145.1 |
| L1652 | 6200002520 | S.COI | ELJNC R18K-F | T | 112.9/133.1 |
| L1653 | 6200001831 | S.COI | NLV32T-100J | B | 105.4/124.6 |
| L1654 | 6200001831 | S.COI | NLV32T-100J | B | 112.4/141.9 |
| L1655 | 6200001831 | S.COI | NLV32T-100J | B | 124.7/139.8 |
| L1701 | 6200001831 | S.COI | NLV32T-100J | T | 167/160 |
| L1702 | 6200003950 | S.COI | HF50ACC 322513-T | T | 175.6/169.8 |
| L1703 | 6200003950 | S.COI | HF50ACC 322513-T | T | 172.6/169.8 |
| L1704 | 6200003950 | S.COI | HF50ACC 322513-T | T | 169.6/169.8 |
| L1705 | 6200003950 | S.COI | HF50ACC 322513-T | T | 165.5/169.8 |
| L1803 | 6200003950 | S.COI | HF50ACC 322513-T | B | 132/54.8 |
| L1804 | 6200003950 | S.COI | HF50ACC 322513-T | B | 118/154.8 |
| L1805 | 6200003950 | S.COI | HF50ACC 322513-T | B | 155.2/132 |
| L1807 | 6200003950 | S.COI | HF50ACC 322513-T | B | 118/151.3 |
| L1808 | 6200003950 | S.COI | HF50ACC 322513-T | B | 141.3/162 |
| L1809 | 6200003950 | S.COI | HF50ACC 322513-T | B | 149.5/115.6 |
| R1 | 7030005871 | S.RES | ERA3YKD 104V (100K) | T | 32.5/19.2 |
| R2 | 7030005321 | S.RES | ERA3YED 103V (10K) | T | 31.2/19.2 |
| R3 | 7030003550 | S.RES | ERJ3GEYJ 822 V (8.2K) | T | 16.9/23.5 |
| R4 | 7030003550 | S.RES | ERJ3GEYJ 822 V (8.2K) | T | 16.9/24.8 |
| R5 | 7030003550 | S.RES | ERJ3GEYJ 822 V (8.2K) | T | 13.3/31.3 |
| R6 | 7030003550 | S.RES | ERJ3GEYJ 822 V (8.2K) | T | 13.3/30 |
| R7 | 7030003500 | S.RES | ERJ3GEYJ 332 V (3.3K) | B | 26.7/12.9 |
| R8 | 7030003470 | S.RES | ERJ3GEYJ 182 V (1.8K) | B | 28.2/14.6 |
| R9 | 7030003680 | S.RES | ERJ3GEYJ 104 V (100K) | B | 27.5/10.6 |
| R10 | 7030003360 | S.RES | ERJ3GEYJ 221 V (220) | T | 19/16 |
| R11 | 7030003360 | S.RES | ERJ3GEYJ 221 V (220) | T | 20.3/16 |
| R12 | 7030003360 | S.RES | ERJ3GEYJ 221 V (220) | T | 22.4/16 |
| R13 | 7030003360 | S.RES | ERJ3GEYJ 221 V (220) | T | 23.7/16 |
| R14 | 7030003360 | S.RES | ERJ3GEYJ 221 V (220) | T | 25/16 |
| R15 | 7030003360 | S.RES | ERJ3GEYJ 221 V (220) | T | 26.4/16.2 |
| R16 | 7030003360 | S.RES | ERJ3GEYJ 221 V (220) | T | 32.5/15.4 |
| R17 | 7030003360 | S.RES | ERJ3GEYJ 221 V (220) | T | 33.8/15.4 |
| R30 | 7030003240 | S.RES | ERJ3GEYJ 220 V (22) | T | 21.7/113.7 |
| R31 | 7030003600 | S.RES | ERJ3GEYJ 223 V (22K) | T | 20.4/111.1 |
| R32 | 7030003320 | S.RES | ERJ3GEYJ 101 V (100) | T | 23/113.7 |
| R33 | 7030003340 | S.RES | ERJ3GEYJ 151 V (150) | T | 19.1/115 |
| R51 | 7030011030 | S.RES | ERJ1TYJ 270U (27) | T | 66.3/13.9 |
| R61 | 7030011030 | S.RES | ERJ1TYJ 270U (27) | T | 45.1/13.9 |
| R101 | 7030003800 | S.RES | ERJ3GEYJ 105 V (1M) | T | 34.1/101.5 |
| R102 | 7030003860 | S.RES | ERJ3GE JPW V | B | 35.6/88.6 |
| R103 | 7030007230 | S.RES | ERA3YED 102V (1K) | T | 25.1/100.3 |
| R104 | 7030007230 | S.RES | ERA3YED 102V (1K) | T | 26.4/100.3 |
| R105 | 7030007230 | S.RES | ERA3YED 102V (1K) | T | 27.8/100.3 |
| R106 | 7030003360 | S.RES | ERJ3GEYJ 221 V (220) | T | 29.1/100.3 |
| R107 | 7030003320 | S.RES | ERJ3GEYJ 101 V (100) | T | 38/101.5 |
| R108 | 7030007230 | S.RES | ERA3YED 102V (1K) | T | 28.9/79 |
| R109 | 7030007230 | S.RES | ERA3YED 102V (1K) | T | 41.9/84.5 |
| R110 | 7030007220 | S.RES | ERA3YED 202V (2K) | T | 14.6/100.5 |
| R111 | 7030007220 | S.RES | ERA3YED 202V (2K) | T | 17.2/100.5 |
| R112 | 7030007220 | S.RES | ERA3YED 202V (2K) | T | 17.2/99.2 |
| R113 | 7030007220 | S.RES | ERA3YED 202V (2K) | T | 17.2/97.9 |
| R114 | 7030007220 | S.RES | ERA3YED 202V (2K) | T | 17.2/96.6 |
| R115 | 7030007220 | S.RES | ERA3YED 202V (2K) | T | 17.2/95.2 |
| R116 | 7030007220 | S.RES | ERA3YED 202V (2K) | T | 17.2/93.9 |
| R117 | 7030007220 | S.RES | ERA3YED 202V (2K) | T | 17.2/92.6 |
| R118 | 7030007200 | S.RES | ERA3YEB 202V (2K) | T | 17.2/91.3 |
| R119 | 7030007200 | S.RES | ERA3YEB 202V (2K) | T | 17.2/89.6 |
| R120 | 7030007200 | S.RES | ERA3YEB 202V (2K) | T | 17.2/87 |
| R121 | 7030007200 | S.RES | ERA3YEB 202V (2K) | T | 17.2/84.4 |
| R122 | 7030007200 | S.RES | ERA3YEB 202V (2K) | T | 17.2/81.8 |
| R123 | 7030007230 | S.RES | ERA3YED 102V (1K) | T | 14.6/99.2 |
| R124 | 7030007230 | S.RES | ERA3YED 102V (1K) | T | 14.6/97.9 |
| R125 | 7030007230 | S.RES | ERA3YED 102V (1K) | T | 14.6/96.6 |
| R126 | 7030007230 | S.RES | ERA3YED 102V (1K) | T | 14.6/95.2 |
| R127 | 7030007230 | S.RES | ERA3YED 102V (1K) | T | 14.6/93.9 |
| R128 | 7030007230 | S.RES | ERA3YED 102V (1K) | T | 14.6/92.6 |
| R129 | 7030007210 | S.RES | ERA3YEB 102V (1K) | T | 14.6/91.3 |
| R130 | 7030007210 | S.RES | ERA3YEB 102V (1K) | T | 14.6/89.6 |
| R131 | 7030007210 | S.RES | ERA3YEB 102V (1K) | T | 14.6/88.3 |
| R132 | 7030007210 | S.RES | ERA3YEB 102V (1K) | T | 14.6/87 |
| R133 | 7030007210 | S.RES | ERA3YEB 102V (1K) | T | 14.6/85.7 |
| R134 | 7030009861 | S.RES | ERA3YED 471V (470) | T | 14.6/84.4 |
| R135 | 7030003860 | S.RES | ERJ3GE JPW V | T | 30.4/75.8 |
| R136 | 7030003800 | S.RES | ERJ3GEYJ 105 V (1M) | T | 33/77.1 |
| R137 | 7030003200 | S.RES | ERJ3GEYJ 100 V (10) | T | 35.5/75.8 |
| R138 | 7030003860 | S.RES | ERJ3GE JPW V | T | 16.8/78.6 |
| R139 | 7030003860 | S.RES | ERJ3GE JPW V | T | 17.6/75.8 |
| R150 | 7030003330 | S.RES | ERJ3GEYJ 121 V (120) | B | 37.8/86.2 |

## [RXPLL-B UNIT]

| REF NO. | PARTS NO. | DESCRIPTION | | M. | H/V LOCATION |
|---|---|---|---|---|---|
| R151 | 7030003220 | S.RES | ERJ3GEYJ 150 V (15) | B | 38.6/88.1 |
| R152 | 7030005871 | S.RES | ERA3YKD 104V (100K) | B | 36.2/82.5 |
| R153 | 7030005321 | S.RES | ERA3YED 103V (10K) | T | 19.2/62.7 |
| R154 | 7030003320 | S.RES | ERJ3GEYJ 101 V (100) | B | 26.3/54.1 |
| R155 | 7030003350 | S.RES | ERJ3GEYJ 181 V (180) | B | 23/54.1 |
| R156 | 7030005871 | S.RES | ERA3YKD 104V (100K) | T | 24.6/53.1 |
| R157 | 7030005871 | S.RES | ERA3YKD 104V (100K) | T | 26.9/58 |
| R158 | 7030003340 | S.RES | ERJ3GEYJ 151 V (150) | T | 30/57.3 |
| R159 | 7030003320 | S.RES | ERJ3GEYJ 101 V (100) | B | 33.6/61.4 |
| R160 | 7030003360 | S.RES | ERJ3GEYJ 221 V (220) | B | 33.6/59.6 |
| R161 | 7030003640 | S.RES | ERJ3GEYJ 473 V (47K) | B | 33.6/54.8 |
| R163 | 7030003220 | S.RES | ERJ3GEYJ 150 V (15) | B | 30.2/56.6 |
| R164 | 7030003310 | S.RES | ERJ3GEYJ 820 V (82) | B | 34.1/70.4 |
| R165 | 7030003320 | S.RES | ERJ3GEYJ 101 V (100) | B | 30.8/70.4 |
| R166 | 7030003320 | S.RES | ERJ3GEYJ 101 V (100) | B | 30.8/72.2 |
| R167 | 7030003240 | S.RES | ERJ3GEYJ 220 V (22) | B | 37.4/75.8 |
| R168 | 7030003360 | S.RES | ERJ3GEYJ 221 V (220) | B | 34.1/75.8 |
| R169 | 7030003640 | S.RES | ERJ3GEYJ 473 V (47K) | B | 30.8/75.8 |
| R202 | 7030007230 | S.RES | ERA3YED 102V (1K) | T | 22.2/39.7 |
| R203 | 7030007230 | S.RES | ERA3YED 102V (1K) | T | 22.2/38.4 |
| R204 | 7030003360 | S.RES | ERJ3GEYJ 221 V (220) | T | 22.2/37.1 |
| R205 | 7030005321 | S.RES | ERA3YED 103V (10K) | T | 27.4/34 |
| R206 | 7030003220 | S.RES | ERJ3GEYJ 150 V (15) | T | 31.1/45.7 |
| R210 | 7030005351 | S.RES | ERA3YED 182V (1.8K) | T | 35.6/37.5 |
| R217 | 7030009651 | S.RES | ERA3YHD 820V (82) | B | 40.4/42.8 |
| R219 | 7030009691 | S.RES | ERA3YED 101V (100) | B | 40/35.7 |
| R220 | 7030005871 | S.RES | ERA3YKD 104V (100K) | T | 73.2/37.6 |
| R221 | 7030005871 | S.RES | ERA3YKD 104V (100K) | T | 72.3/30.9 |
| R222 | 7030003400 | S.RES | ERJ3GEYJ 471 V (470) | T | 81.4/38.3 |
| R223 | 7030007230 | S.RES | ERA3YED 102V (1K) | T | 81.9/31.9 |
| R224 | 7030003320 | S.RES | ERJ3GEYJ 101 V (100) | T | 73.2/40.2 |
| R230 | 7030005871 | S.RES | ERA3YKD 104V (100K) | T | 73.2/50.1 |
| R231 | 7030005871 | S.RES | ERA3YKD 104V (100K) | T | 72.3/43.3 |
| R232 | 7030003360 | S.RES | ERJ3GEYJ 221 V (220) | T | 81.4/50.8 |
| R233 | 7030007230 | S.RES | ERA3YED 102V (1K) | T | 81.9/44.4 |
| R234 | 7030003320 | S.RES | ERJ3GEYJ 101 V (100) | T | 73.2/52.7 |
| R240 | 7030005871 | S.RES | ERA3YKD 104V (100K) | T | 73.2/62.6 |
| R241 | 7030005871 | S.RES | ERA3YKD 104V (100K) | T | 72.3/55.8 |
| R242 | 7030003360 | S.RES | ERJ3GEYJ 221 V (220) | T | 81.4/63.3 |
| R243 | 7030007230 | S.RES | ERA3YED 102V (1K) | T | 81.9/56.9 |
| R244 | 7030003320 | S.RES | ERJ3GEYJ 101 V (100) | T | 73.2/65.2 |
| R250 | 7030005871 | S.RES | ERA3YKD 104V (100K) | T | 73.2/75.1 |
| R251 | 7030005871 | S.RES | ERA3YKD 104V (100K) | T | 72.3/68.4 |
| R252 | 7030003360 | S.RES | ERJ3GEYJ 221 V (220) | T | 81.4/75.8 |
| R253 | 7030007230 | S.RES | ERA3YED 102V (1K) | T | 81.9/69.4 |
| R254 | 7030003320 | S.RES | ERJ3GEYJ 101 V (100) | T | 73.2/77.7 |
| R260 | 7030005871 | S.RES | ERA3YKD 104V (100K) | T | 73.2/87.6 |
| R261 | 7030005871 | S.RES | ERA3YKD 104V (100K) | T | 72.3/80.9 |
| R262 | 7030003400 | S.RES | ERJ3GEYJ 471 V (470) | T | 81.4/88.3 |
| R263 | 7030007230 | S.RES | ERA3YED 102V (1K) | T | 81.9/81.9 |
| R264 | 7030003320 | S.RES | ERJ3GEYJ 101 V (100) | T | 73.2/90.2 |
| R270 | 7030005871 | S.RES | ERA3YKD 104V (100K) | T | 73.2/99.5 |
| R271 | 7030005871 | S.RES | ERA3YKD 104V (100K) | T | 72.3/92.8 |
| R272 | 7030003360 | S.RES | ERJ3GEYJ 221 V (220) | T | 81.4/100.8 |
| R273 | 7030007230 | S.RES | ERA3YED 102V (1K) | T | 81.9/93.9 |
| R274 | 7030003320 | S.RES | ERJ3GEYJ 101 V (100) | T | 73.2/102.1 |
| R301 | 7030003200 | S.RES | ERJ3GEYJ 100 V (10) | T | 86.5/30.6 |
| R302 | 7030007230 | S.RES | ERA3YED 102V (1K) | T | 86.5/29.3 |
| R303 | 7030003360 | S.RES | ERJ3GEYJ 221 V (220) | T | 92.1/28 |
| R304 | 7030003490 | S.RES | ERJ3GEYJ 272 V (2.7K) | T | 94/30.1 |
| R305 | 7030003510 | S.RES | ERJ3GEYJ 392 V (3.9K) | T | 95.3/30.1 |
| R306 | 7030003360 | S.RES | ERJ3GEYJ 221 V (220) | T | 94.7/32.2 |
| R307 | 7030009841 | S.RES | ERA3YHD 330V (33) | T | 92.1/32.2 |
| R308 | 7030009851 | S.RES | ERA3YED 271V (270) | B | 92.6/43.4 |
| R309 | 7030003540 | S.RES | ERJ3GEYJ 682 V (6.8K) | B | 89.1/47 |
| R310 | 7030003500 | S.RES | ERJ3GEYJ 332 V (3.3K) | B | 92.6/47 |
| R311 | 7030003350 | S.RES | ERJ3GEYJ 181 V (180) | B | 89.1/45.2 |
| R312 | 7030003360 | S.RES | ERJ3GEYJ 221 V (220) | B | 92.4/27.8 |
| R313 | 7030003490 | S.RES | ERJ3GEYJ 272 V (2.7K) | B | 91.1/23.1 |
| R314 | 7030003510 | S.RES | ERJ3GEYJ 392 V (3.9K) | B | 88.3/23.1 |
| R315 | 7030003360 | S.RES | ERJ3GEYJ 221 V (220) | B | 87.5/25.1 |
| R316 | 7030003280 | S.RES | ERJ3GEYJ 470 V (47) | B | 78.3/26.1 |
| R317 | 7030006220 | S.RES | ERJ12YJ470U (47) | B | 90/31.4 |
| R318 | 7030009841 | S.RES | ERA3YHD 330V (33) | B | 92.6/41.6 |
| R341 | 7030007230 | S.RES | ERA3YED 102V (1K) | T | 92.1/40.1 |
| R342 | 7030005321 | S.RES | ERA3YED 103V (10K) | T | 86.5/32.2 |
| R343 | 7030007230 | S.RES | ERA3YED 102V (1K) | T | 89.3/34.8 |
| R351 | 7030003200 | S.RES | ERJ3GEYJ 100 V (10) | B | 89.1/52.4 |
| R352 | 7030010980 | S.RES | ERA3YHD 470V (47) | T | 89.3/55.8 |
| R353 | 7030009591 | S.RES | ERA3YED 472V (4.7K) | T | 89.3/54.5 |
| R354 | 7030009591 | S.RES | ERA3YED 472V (4.7K) | T | 89.3/50.4 |
| R355 | 7030009591 | S.RES | ERA3YED 472V (4.7K) | T | 89.3/53.2 |
| R356 | 7030003320 | S.RES | ERJ3GEYJ 101 V (100) | T | 89.3/57.1 |
| R357 | 7310005580 | S.TRI | TMC3ADCS3X (4.7K) | T | 93.6/52.7 |
| R358 | 7030010980 | S.RES | ERA3YHD 470V (47) | T | 94.9/56.4 |
| R359 | 7030003320 | S.RES | ERJ3GEYJ 101 V (100) | T | 94.9/59 |
| R360 | 7030003320 | S.RES | ERJ3GEYJ 101 V (100) | B | 92.6/63.9 |
| R361 | 7030003490 | S.RES | ERJ3GEYJ 272 V (2.7K) | B | 89.2/62.1 |
| R362 | 7030003510 | S.RES | ERJ3GEYJ 392 V (3.9K) | B | 92.6/60.3 |
| R363 | 7030003320 | S.RES | ERJ3GEYJ 101 V (100) | B | 92.6/65.7 |
| R364 | 7030003410 | S.RES | ERJ3GEYJ 561 V (560) | T | 94.9/82.9 |
| R365 | 7030007860 | S.RES | ERJ3GEYJ 8R2V (8.2) | T | 92/83.4 |
| R366 | 7030003410 | S.RES | ERJ3GEYJ 561 V (560) | T | 94.9/84.2 |
| R368 | 7030005321 | S.RES | ERA3YED 103V (10K) | T | 86.1/59.6 |
| R369 | 7030008240 | S.RES | ERJ12Y0R00U | B | 95.3/57.1 |
| R421 | 7030007230 | S.RES | ERA3YED 102V (1K) | T | 92.1/87.8 |
| R425 | 7030003410 | S.RES | ERJ3GEYJ 561 V (560) | T | 90.1/81.6 |
| R427 | 7030003320 | S.RES | ERJ3GEYJ 101 V (100) | B | 86.8/87.3 |
| R428 | 7030009861 | S.RES | ERA3YED 471V (470) | B | 92.1/88 |
| R441 | 7030007230 | S.RES | ERA3YED 102V (1K) | T | 92.1/75.5 |
| R442 | 7030005321 | S.RES | ERA3YED 103V (10K) | T | 88.9/70.9 |
| R443 | 7030007230 | S.RES | ERA3YED 102V (1K) | T | 88.9/72.2 |
| R501 | 7030003360 | S.RES | ERJ3GEYJ 221 V (220) | T | 29.2/153.1 |
| R502 | 7030007230 | S.RES | ERA3YED 102V (1K) | T | 27.9/153.1 |
| R503 | 7030007230 | S.RES | ERA3YED 102V (1K) | T | 26.5/153.1 |

M.=Mounted side (T: Mounted on the Top side, B: Mounted on the Bottom side)
S.=Surface mount

## [RXPLL-B UNIT]

| REF NO. | PARTS NO. | DESCRIPTION | M. | H/V LOCATION |
|---|---|---|---|---|
| R504 | 7030007230 | S.RES ERA3YED 102V (1K) | T | 25.2/153.1 |
| R506 | 7030003800 | S.RES ERJ3GEYJ 105 V (1M) | T | 34/154.5 |
| R509 | 7030003440 | S.RES ERJ3GEYJ 102 V (1K) [USA] | T | 42.5/136 |
| | 7030003440 | S.RES ERJ3GEYJ 102 V (1K) [EUR] | | |
| | 7030003440 | S.RES ERJ3GEYJ 102 V (1K) [FRA] | | |
| | 7030003440 | S.RES ERJ3GEYJ 102 V (1K) [DEN] | | |
| | 7030003440 | S.RES ERJ3GEYJ 102 V (1K) [ITR] | | |
| | 7030003440 | S.RES ERJ3GEYJ 102 V (1K) [KOR] | | |
| | 7030003440 | S.RES ERJ3GEYJ 102 V (1K) [ESP] | | |
| | 7030003440 | S.RES ERJ3GEYJ 102 V (1K) [AUS] | | |
| | 7030003440 | S.RES ERJ3GEYJ 102 V (1K) [UK] | | |
| | 7030003440 | S.RES ERJ3GEYJ 102 V (1K) [RX] | | |
| | 7030007230 | S.RES ERA3YED 102V (1K) [CHN] | | |
| R510 | 7030007220 | S.RES ERA3YED 202V (2K) | T | 14.6/153.6 |
| R511 | 7030007220 | S.RES ERA3YED 202V (2K) | T | 17.2/153.6 |
| R512 | 7030007220 | S.RES ERA3YED 202V (2K) | T | 17.2/152.3 |
| R513 | 7030007220 | S.RES ERA3YED 202V (2K) | T | 17.2/151 |
| R514 | 7030007220 | S.RES ERA3YED 202V (2K) | T | 17.2/149.7 |
| R515 | 7030007220 | S.RES ERA3YED 202V (2K) | T | 17.2/148.3 |
| R516 | 7030007220 | S.RES ERA3YED 202V (2K) | T | 17.2/147 |
| R517 | 7030007220 | S.RES ERA3YED 202V (2K) | T | 17.2/145.7 |
| R518 | 7030007200 | S.RES ERA3YEB 202V (2K) | T | 17.2/144.4 |
| R519 | 7030007200 | S.RES ERA3YEB 202V (2K) | T | 17.2/142.7 |
| R520 | 7030007200 | S.RES ERA3YEB 202V (2K) | T | 17.2/141.4 |
| R521 | 7030007200 | S.RES ERA3YEB 202V (2K) | T | 17.2/140.1 |
| R522 | 7030007200 | S.RES ERA3YEB 202V (2K) | T | 17.2/138.8 |
| R523 | 7030007230 | S.RES ERA3YED 102V (1K) | T | 14.6/152.3 |
| R524 | 7030007230 | S.RES ERA3YED 102V (1K) | T | 14.6/151 |
| R525 | 7030007230 | S.RES ERA3YED 102V (1K) | T | 14.6/149.7 |
| R526 | 7030007230 | S.RES ERA3YED 102V (1K) | T | 14.6/148.3 |
| R527 | 7030007230 | S.RES ERA3YED 102V (1K) | T | 14.6/147 |
| R528 | 7030007230 | S.RES ERA3YED 102V (1K) | T | 14.6/145.7 |
| R529 | 7030007210 | S.RES ERA3YEB 102V (1K) | T | 14.6/144.4 |
| R530 | 7030007210 | S.RES ERA3YEB 102V (1K) | T | 14.6/142.7 |
| R531 | 7030007210 | S.RES ERA3YEB 102V (1K) | T | 14.6/141.4 |
| R532 | 7030007210 | S.RES ERA3YEB 102V (1K) | T | 14.6/140.1 |
| R533 | 7030007210 | S.RES ERA3YEB 102V (1K) | T | 14.6/138.8 |
| R534 | 7030003860 | S.RES ERJ3GE JPW V | T | 22.2/127.6 |
| R535 | 7030003800 | S.RES ERJ3GEYJ 105 V (1M) | T | 24.8/129.8 |
| R536 | 7030003200 | S.RES ERJ3GEYJ 100 V (10) | T | 28/128.3 |
| R537 | 7030007230 | S.RES ERA3YED 102V (1K) | T | 30.3/131.9 |
| R538 | 7030003360 | S.RES ERJ3GEYJ 221 V (220) | B | 34.8/146.5 |
| R540 | 7030007230 | S.RES ERA3YED 102V (1K) | B | 52.3/142.8 |
| R544 | 7030005871 | S.RES ERA3YKD 104V (100K) | T | 69.4/140.4 |
| R545 | 7030005871 | S.RES ERA3YKD 104V (100K) | T | 69.4/139.1 |
| R546 | 7030009861 | S.RES ERA3YED 471V (470) | T | 67.4/150.7 |
| R548 | 7030009591 | S.RES ERA3YED 472V (4.7K) | B | 43.4/136.5 |
| R550 | 7030009691 | S.RES ERA3YED 101V (100) | B | 43.4/134.7 |
| R554 | 7030009891 | S.RES ERA3YED 151V (150) | B | 47.2/133.9 |
| R555 | 7030003380 | S.RES ERJ3GEYJ 331 V (330) | B | 61.9/142.1 |
| R556 | 7030005981 | S.RES ERA3YED 333V (33K) | B | 44.2/128.2 |
| R561 | 7030003200 | S.RES ERJ3GEYJ 100 V (10) | T | 71.3/148.5 |
| R562 | 7030003360 | S.RES ERJ3GEYJ 221 V (220) | T | 65.7/155.5 |
| R563 | 7030003490 | S.RES ERJ3GEYJ 272 V (2.7K) | T | 70.4/151.9 |
| R564 | 7030003510 | S.RES ERJ3GEYJ 392 V (3.9K) | T | 70.4/150.6 |
| R565 | 7030003360 | S.RES ERJ3GEYJ 221 V (220) | T | 67/155.5 |
| R570 | 7030003230 | S.RES ERJ3GEYJ 180 V (18) | T | 63.1/155.5 |
| R571 | 7030003230 | S.RES ERJ3GEYJ 180 V (18) | T | 58.5/155 |
| R572 | 7030003290 | S.RES ERJ3GEYJ 560 V (56) | B | 57.2/156.3 |
| R573 | 7030003270 | S.RES ERJ3GEYJ 390 V (39) | T | 61.8/155.5 |
| R574 | 7030003240 | S.RES ERJ3GEYJ 220 V (22) | T | 60.5/155.5 |
| R575 | 7030003270 | S.RES ERJ3GEYJ 390 V (39) | T | 58.5/156.3 |
| R580 | 7030009861 | S.RES ERA3YED 471V (470) | T | 41.9/153.7 |
| R581 | 7030003360 | S.RES ERJ3GEYJ 221 V (220) | T | 41.9/145.5 |
| R582 | 7030003600 | S.RES ERJ3GEYJ 223 V (22K) | T | 41.9/149.5 |
| R587 | 7030003300 | S.RES ERJ3GEYJ 680 V (68) | T | 55.7/157.6 |
| R588 | 7030003340 | S.RES ERJ3GEYJ 151 V (150) | T | 58.5/158.9 |
| R589 | 7030003300 | S.RES ERJ3GEYJ 680 V (68) | T | 55.7/158.9 |
| R591 | 7030003320 | S.RES ERJ3GEYJ 101 V (100) | T | 58.2/169.9 |
| R592 | 7030005321 | S.RES ERA3YED 103V (10K) | T | 58.5/167.9 |
| R593 | 7030003480 | S.RES ERJ3GEYJ 222 V (2.2K) | T | 58.5/165.1 |
| R594 | 7030003320 | S.RES ERJ3GEYJ 101 V (100) | B | 61.9/168.1 |
| R595 | 7030003640 | S.RES ERJ3GEYJ 473 V (47K) | B | 55.9/165.3 |
| R596 | 7030003540 | S.RES ERJ3GEYJ 682 V (6.8K) | B | 54.7/168.9 |
| R601 | 7030009851 | S.RES ERA3YED 271V (270) | T | 51.7/118.2 |
| R602 | 7030003470 | S.RES ERJ3GEYJ 182 V (1.8K) | T | 49.5/120.1 |
| R606 | 7030003360 | S.RES ERJ3GEYJ 221 V (220) | T | 45.3/115.6 |
| R607 | 7030003480 | S.RES ERJ3GEYJ 222 V (2.2K) | T | 48.6/115.4 |
| R608 | 7030007230 | S.RES ERA3YED 102V (1K) | T | 49.9/115.4 |
| R651 | 7030007230 | S.RES ERA3YED 102V (1K) | B | 23.5/177.1 |
| R652 | 7030003360 | S.RES ERJ3GEYJ 221 V (220) | T | 13.5/170.8 |
| R653 | 7030007230 | S.RES ERA3YED 102V (1K) | T | 13.5/169.5 |
| R654 | 7030007230 | S.RES ERA3YED 102V (1K) | T | 13.5/168.2 |
| R656 | 7030003800 | S.RES ERJ3GEYJ 105 V (1M) | T | 15/161.4 |
| R657 | 7030003320 | S.RES ERJ3GEYJ 101 V (100) | T | 20.2/161.4 |
| R661 | 7030007220 | S.RES ERA3YED 202V (2K) | T | 31.7/162.8 |
| R662 | 7030007220 | S.RES ERA3YED 202V (2K) | T | 31.7/164.1 |
| R663 | 7030007220 | S.RES ERA3YED 202V (2K) | T | 31.7/165.4 |
| R664 | 7030007220 | S.RES ERA3YED 202V (2K) | T | 31.7/166.7 |
| R665 | 7030007220 | S.RES ERA3YED 202V (2K) | T | 31.7/168 |
| R666 | 7030007220 | S.RES ERA3YED 202V (2K) | T | 31.7/170.6 |
| R667 | 7030007220 | S.RES ERA3YED 202V (2K) | T | 31.7/171.9 |
| R668 | 7030007220 | S.RES ERA3YED 202V (2K) | T | 31.7/173.2 |
| R669 | 7030007200 | S.RES ERA3YEB 202V (2K) | T | 31.7/174.5 |
| R670 | 7030007200 | S.RES ERA3YEB 202V (2K) | T | 31.7/175.8 |
| R671 | 7030007200 | S.RES ERA3YEB 202V (2K) | T | 31.7/177.1 |
| R673 | 7030007230 | S.RES ERA3YED 102V (1K) | T | 34.3/165.4 |
| R674 | 7030007230 | S.RES ERA3YED 102V (1K) | T | 34.3/166.7 |
| R675 | 7030007230 | S.RES ERA3YED 102V (1K) | T | 34.3/168 |
| R676 | 7030007230 | S.RES ERA3YED 102V (1K) | T | 34.3/169.3 |
| R677 | 7030007230 | S.RES ERA3YED 102V (1K) | T | 34.3/170.6 |
| R678 | 7030007230 | S.RES ERA3YED 102V (1K) | T | 34.3/171.9 |
| R679 | 7030007210 | S.RES ERA3YEB 102V (1K) | T | 34.3/173.2 |
| R680 | 7030007210 | S.RES ERA3YEB 102V (1K) | T | 34.3/174.5 |
| R681 | 7030007210 | S.RES ERA3YEB 102V (1K) | T | 34.3/175.8 |

## [RXPLL-B UNIT]

| REF NO. | PARTS NO. | DESCRIPTION | M. | H/V LOCATION |
|---|---|---|---|---|
| R683 | 7030003860 | S.RES ERJ3GE JPW V | B | 58.4/167.8 |
| R685 | 7030003460 | S.RES ERJ3GEYJ 152 V (1.5K) | T | 38.4/169.7 |
| R686 | 7030003320 | S.RES ERJ3GEYJ 101 V (100) | T | 40.3/163.4 |
| R687 | 7030003470 | S.RES ERJ3GEYJ 182 V (1.8K) | T | 37.4/165.1 |
| R688 | 7030003480 | S.RES ERJ3GEYJ 222 V (2.2K) | T | 34.3/162.8 |
| R689 | 7030003360 | S.RES ERJ3GEYJ 221 V (220) | T | 33.6/161.5 |
| R690 | 7030009851 | S.RES ERA3YED 271V (270) | T | 46.4/165.3 |
| R691 | 7030003230 | S.RES ERJ3GEYJ 180 V (18) | T | 48.4/164.8 |
| R692 | 7030009851 | S.RES ERA3YED 271V (270) | T | 46.4/166.6 |
| R693 | 7030003360 | S.RES ERJ3GEYJ 221 V (220) | T | 37.1/169.7 |
| R704 | 7030009841 | S.RES ERA3YHD 330V (33) | T | 30.8/113.7 |
| R705 | 7030003600 | S.RES ERJ3GEYJ 223 V (22K) | T | 29.5/113.7 |
| R706 | 7030005321 | S.RES ERA3YED 103V (10K) | T | 28.2/113.7 |
| R707 | 7030009861 | S.RES ERA3YED 471V (470) | T | 30.8/108.1 |
| R708 | 7030003410 | S.RES ERJ3GEYJ 561 V (560) | T | 43.3/118.8 |
| R709 | 7030007860 | S.RES ERJ3GEYJ 8R2V (8.2) | T | 43.3/116 |
| R710 | 7030003410 | S.RES ERJ3GEYJ 561 V (560) | T | 43.8/121.1 |
| R711 | 7030003320 | S.RES ERJ3GEYJ 101 V (100) | T | 37.9/154.5 |
| R1000 | 7030003320 | S.RES ERJ3GEYJ 101 V (100) | B | 177.1/11.2 |
| R1003 | 7030010980 | S.RES ERA3YHD 470V (47) | T | 162/13.4 |
| R1004 | 7030007230 | S.RES ERA3YED 102V (1K) | B | 166.4/12.9 |
| R1005 | 7030003550 | S.RES ERJ3GEYJ 822 V (8.2K) | T | 144/26.1 |
| R1006 | 7030007230 | S.RES ERA3YED 102V (1K) | T | 145.3/26.1 |
| R1007 | 7030004030 | S.RES ERJ3GEYJ 5R6 V (5.6) | B | 153.7/33.6 |
| R1008 | 7030003240 | S.RES ERJ3GEYJ 220 V (22) | T | 144/36.4 |
| R1009 | 7030010980 | S.RES ERA3YHD 470V (47) | T | 182.4/29.3 |
| R1010 | 7030010980 | S.RES ERA3YHD 470V (47) | T | 154.5/33.2 |
| R1013 | 7030007230 | S.RES ERA3YED 102V (1K) | B | 172.7/40.8 |
| R1014 | 7030007230 | S.RES ERA3YED 102V (1K) | B | 156.7/40.8 |
| R1015 | 7030003530 | S.RES ERJ3GEYJ 562 V (5.6K) | B | 172.7/45.4 |
| R1016 | 7030003530 | S.RES ERJ3GEYJ 562 V (5.6K) | B | 156.7/45.4 |
| R1017 | 7030003530 | S.RES ERJ3GEYJ 562 V (5.6K) | B | 169.7/12.9 |
| R1020 | 7030003390 | S.RES ERJ3GEYJ 391 V (390) | T | 179.6/18.3 |
| R1021 | 7030003220 | S.RES ERJ3GEYJ 150 V (15) | T | 177/19.4 |
| R1022 | 7030003390 | S.RES ERJ3GEYJ 391 V (390) | T | 180.9/19.4 |
| R1023 | 7030010980 | S.RES ERA3YHD 470V (47) | B | 149.3/33.5 |
| R1024 | 7030003200 | S.RES ERJ3GEYJ 100 V (10) | B | 150.1/31.4 |
| R1025 | 7030003300 | S.RES ERJ3GEYJ 680 V (68) | T | 178.3/19.4 |
| R1026 | 7030003480 | S.RES ERJ3GEYJ 222 V (2.2K) | B | 171.2/14.2 |
| R1027 | 7030003200 | S.RES ERJ3GEYJ 100 V (10) | B | 176.5/38.3 |
| R1028 | 7030003200 | S.RES ERJ3GEYJ 100 V (10) | B | 160.5/38.3 |
| R1029 | 7030010980 | S.RES ERA3YHD 470V (47) | B | 178.2/46.1 |
| R1030 | 7030010980 | S.RES ERA3YHD 470V (47) | B | 162.2/46.1 |
| R1051 | 7030003800 | S.RES ERJ3GEYJ 105 V (1M) | T | 178.6/93.1 |
| R1054 | 7030011500 | S.RES ERA3YHD 270V (27) | T | 149.1/83.2 |
| R1055 | 7030000010 | S.RES MCR10EZHJ JPW (000) | T | 162.1/76.6 |
| R1056 | 7030000010 | S.RES MCR10EZHJ JPW (000) | T | 177.5/71.1 |
| R1071 | 7030010980 | S.RES ERA3YHD 470V (47) | B | 165.9/76.4 |
| R1072 | 7030000010 | S.RES MCR10EZHJ JPW (000) | T | 133.9/84.1 |
| R1073 | 7030000010 | S.RES MCR10EZHJ JPW (000) | T | 135.5/85.7 |
| R1101 | 7310004860 | S.TRI EVM-3YSX50 B53 (502) | T | 180.1/90.2 |
| R1102 | 7030005871 | S.RES ERA3YKD 104V (100K) | B | 180.2/100.6 |
| R1103 | 7030007680 | S.RES ERJ8ENF 47R0V (47) | T | 181.7/104.7 |
| R1104 | 7030007680 | S.RES ERJ8ENF 47R0V (47) | T | 173.6/107.2 |
| R1105 | 7030003500 | S.RES ERJ3GEYJ 332 V (3.3K) | T | 176.7/87.7 |
| R1106 | 7030009620 | S.RES ERJ12YJ120U (12) | B | 179.6/117.9 |
| R1107 | 7030010980 | S.RES ERA3YHD 470V (47) | T | 175.6/120.3 |
| R1109 | 7030007180 | S.RES ERJ12YJ150U (15) | B | 176.5/125.7 |
| R1110 | 7030003480 | S.RES ERJ3GEYJ 222 V (2.2K) | B | 168.5/131.6 |
| R1111 | 7030003480 | S.RES ERJ3GEYJ 222 V (2.2K) | T | 166.2/130.4 |
| R1113 | 7030003480 | S.RES ERJ3GEYJ 222 V (2.2K) | T | 166.2/131.7 |
| R1114 | 7030004040 | S.RES ERJ3GEYJ 4R7 V (4.7) | T | 179.2/125.3 |
| R1115 | 7030006240 | S.RES ERJ12YJ181U (180) | B | 176.5/129.9 |
| R1116 | 7030007230 | S.RES ERA3YED 102V (1K) | T | 175.7/135.3 |
| R1117 | 7030004040 | S.RES ERJ3GEYJ 4R7 V (4.7) | T | 175.7/134 |
| R1118 | 7030003480 | S.RES ERJ3GEYJ 222 V (2.2K) | T | 175.4/132 |
| R1119 | 7030003470 | S.RES ERJ3GEYJ 182 V (1.8K) | T | 178/132 |
| R1120 | 7030006070 | S.RES ERJ12YJ101U (100) | B | 177.3/141 |
| R1121 | 7030003240 | S.RES ERJ3GEYJ 220 V (22) | T | 178.6/139.6 |
| R1122 | 7030010980 | S.RES ERA3YHD 470V (47) | T | 171.9/131.1 |
| R1123 | 7030003480 | S.RES ERJ3GEYJ 222 V (2.2K) | T | 165.7/137.4 |
| R1124 | 7030003460 | S.RES ERJ3GEYJ 152 V (1.5K) | T | 165.7/140 |
| R1125 | 7030003420 | S.RES ERJ3GEYJ 681 V (680) | B | 171/142.2 |
| R1126 | 7030003200 | S.RES ERJ3GEYJ 100 V (10) | T | 168.4/142.2 |
| R1127 | 7030010980 | S.RES ERA3YHD 470V (47) | T | 174.6/142.9 |
| R1128 | 7030003470 | S.RES ERJ3GEYJ 182 V (1.8K) | T | 174.6/146.6 |
| R1129 | 7030003470 | S.RES ERJ3GEYJ 182 V (1.8K) | T | 174.6/148.4 |
| R1130 | 7030003480 | S.RES ERJ3GEYJ 222 V (2.2K) | T | 180.6/146.4 |
| R1131 | 7030003640 | S.RES ERJ3GEYJ 473 V (47K) | B | 177.4/90.7 |
| R1132 | 7310004860 | S.TRI EVM-3YSX50 B53 (502) | T | 179.4/84.3 |
| R1133 | 7030003500 | S.RES ERJ3GEYJ 332 V (3.3K) | T | 175.5/82.5 |
| R1134 | 7030003640 | S.RES ERJ3GEYJ 473 V (47K) | T | 175.5/83.8 |
| R1135 | 7030005871 | S.RES ERA3YKD 104V (100K) | T | 182.2/97.8 |
| R1151 | 7030003280 | S.RES ERJ3GEYJ 470 V (47) | T | 134.8/63.9 |
| R1152 | 7030003280 | S.RES ERJ3GEYJ 470 V (47) | B | 117.2/56.3 |
| R1203 | 7030000010 | S.RES MCR10EZHJ JPW (000) | T | 157.5/74.9 |
| R1211 | 7030003860 | S.RES ERJ3GE JPW V | T | 117.6/7.8 |
| R1212 | 7030003860 | S.RES ERJ3GE JPW V | T | 124.8/51.1 |
| R1213 | 7030003200 | S.RES ERJ3GEYJ 100 V (10) | B | 118.8/25 |
| R1214 | 7030003200 | S.RES ERJ3GEYJ 100 V (10) | B | 109/25 |
| R1216 | 7030010980 | S.RES ERA3YHD 470V (47) | B | 120.7/31.6 |
| R1217 | 7030010980 | S.RES ERA3YHD 470V (47) | B | 111.2/31.6 |
| R1220 | 7030010980 | S.RES ERA3YHD 470V (47) | T | 118.7/17.3 |
| R1221 | 7030007230 | S.RES ERA3YED 102V (1K) | T | 116.4/39.9 |
| R1222 | 7030003530 | S.RES ERJ3GEYJ 562 V (5.6K) | T | 116.4/38.6 |
| R1223 | 7030010980 | S.RES ERA3YHD 470V (47) | T | 109.3/17.1 |
| R1224 | 7030007230 | S.RES ERA3YED 102V (1K) | T | 106.6/39.9 |
| R1225 | 7030003530 | S.RES ERJ3GEYJ 562 V (5.6K) | T | 106.6/38.6 |
| R1226 | 7030003410 | S.RES ERJ3GEYJ 561 V (560) | T | 158.9/92.9 |
| R1227 | 7030003410 | S.RES ERJ3GEYJ 561 V (560) | T | 154/92.9 |
| R1228 | 7310004860 | S.TRI EVM-3YSX50 B53 (502) | T | 156.4/92.9 |
| R1229 | 7030003480 | S.RES ERJ3GEYJ 222 V (2.2K) | B | 156.1/117.4 |
| R1230 | 7030003480 | S.RES ERJ3GEYJ 222 V (2.2K) | B | 156.1/119.2 |
| R1231 | 7030003480 | S.RES ERJ3GEYJ 222 V (2.2K) | B | 156.1/121 |
| R1232 | 7030003600 | S.RES ERJ3GEYJ 223 V (22K) | T | 156.3/97.5 |

M.=Mounted side (T: Mounted on the Top side, B: Mounted on the Bottom side)
S.=Surface mount

## [RXPLL-B UNIT]

| REF NO. | PARTS NO. | DESCRIPTION | M. | H/V LOCATION |
|---|---|---|---|---|
| R1233 | 7030010980 | S.RES ERA3YHD 470V (47) | B | 152.5/109.4 |
| R1301 | 7030010980 | S.RES ERA3YHD 470V (47) | B | 155.7/97.5 |
| R1302 | 7030003860 | S.RES ERJ3GE JPW V | T | 159.3/116.8 |
| R1304 | 7030003620 | S.RES ERJ3GEYJ 333 V (33K) | T | 156.5/123.2 |
| R1306 | 7030006230 | S.RES ERJ12YJ151U (150) | B | 153.8/124.8 |
| R1307 | 7030003300 | S.RES ERJ3GEYJ 680 V (68) | T | 156.5/128.4 |
| R1311 | 7030000010 | S.RES MCR10EZHJ JPW (000) | T | 140.3/98.8 |
| R1312 | 7030000010 | S.RES MCR10EZHJ JPW (000) | T | 143.2/104.1 |
| R1313 | 7030000010 | S.RES MCR10EZHJ JPW (000) | T | 143.2/101.5 |
| R1357 | 7030007230 | S.RES ERA3YED 102V (1K) | B | 140.7/70.4 |
| R1358 | 7030003530 | S.RES ERJ3GEYJ 562 V (5.6K) | B | 142.8/70.4 |
| R1359 | 7030010980 | S.RES ERA3YHD 470V (47) | T | 139.4/64.7 |
| R1360 | 7030007230 | S.RES ERA3YED 102V (1K) | B | 146.4/67.1 |
| R1361 | 7030003380 | S.RES ERJ3GEYJ 331 V (330) | T | 139.3/68.8 |
| R1362 | 7030005871 | S.RES ERA3YKD 104V (100K) | B | 144.6/70.4 |
| R1401 | 7030003200 | S.RES ERJ3GEYJ 100 V (10) | T | 131.5/103.3 |
| R1402 | 7030003300 | S.RES ERJ3GEYJ 680 V (68) | T | 126.4/111 |
| R1403 | 7030007230 | S.RES ERA3YED 102V (1K) | T | 132/107.7 |
| R1404 | 7030009861 | S.RES ERA3YED 471V (470) | T | 134.6/104.3 |
| R1405 | 7030003340 | S.RES ERJ3GEYJ 151 V (150) | T | 137.2/104.3 |
| R1406 | 7030009591 | S.RES ERA3YED 472V (4.7K) | T | 135.2/106.2 |
| R1407 | 7030003550 | S.RES ERJ3GEYJ 822 V (8.2K) | B | 135.4/104.3 |
| R1408 | 7030003200 | S.RES ERJ3GEYJ 100 V (10) | T | 120.9/109 |
| R1409 | 7030009591 | S.RES ERA3YED 472V (4.7K) | T | 120.5/114.9 |
| R1410 | 7030006091 | S.RES ERA3YED 822V (8.2K) | B | 124.2/114.4 |
| R1411 | 7030005871 | S.RES ERA3YKD 104V (100K) | T | 123.2/116.2 |
| R1412 | 7030003200 | S.RES ERJ3GEYJ 100 V (10) | T | 126.4/112.3 |
| R1413 | 7030003200 | S.RES ERJ3GEYJ 100 V (10) | T | 126.4/113.6 |
| R1414 | 7030005871 | S.RES ERA3YKD 104V (100K) | B | 120.9/114.4 |
| R1415 | 7030010980 | S.RES ERA3YHD 470V (47) | T | 127/114.9 |
| R1416 | 7030003320 | S.RES ERJ3GEYJ 101 V (100) | B | 139.7/122.9 |
| R1417 | 7030000010 | S.RES MCR10EZHJ JPW (000) | B | 130.1/124.5 |
| R1418 | 7030000010 | S.RES MCR10EZHJ JPW (000) | B | 130.1/122.5 |
| R1419 | 7030003860 | S.RES ERJ3GE JPW V | B | 129.4/114.9 |
| R1501 | 7030010980 | S.RES ERA3YHD 470V (47) | T | 126.5/125.2 |
| R1502 | 7030009841 | S.RES ERA3YHD 330V (33) | T | 133/131 |
| R1503 | 7030009851 | S.RES ERA3YED 271V (270) | T | 130/146.3 |
| R1504 | 7030011050 | S.RES ERA3YHD 100V (10) | T | 131.3/143.5 |
| R1505 | 7030006091 | S.RES ERA3YED 822V (8.2K) | B | 137.7/140.3 |
| R1506 | 7030007230 | S.RES ERA3YED 102V (1K) | B | 137.7/147 |
| R1507 | 7030007230 | S.RES ERA3YED 102V (1K) | T | 132.6/146.3 |
| R1508 | 7030007230 | S.RES ERA3YED 102V (1K) | T | 133.9/146.3 |
| R1509 | 7030007230 | S.RES ERA3YED 102V (1K) | T | 139.1/158.9 |
| R1510 | 7030005321 | S.RES ERA3YED 103V (10K) | T | 139.1/157.6 |
| R1511 | 7030009861 | S.RES ERA3YED 471V (470) | T | 136.5/157.6 |
| R1512 | 7030003380 | S.RES ERJ3GEYJ 331 V (330) | T | 129.6/151.6 |
| R1513 | 7030003380 | S.RES ERJ3GEYJ 331 V (330) | T | 129.6/155.5 |
| R1514 | 7030005321 | S.RES ERA3YED 103V (10K) | T | 129.6/160.8 |
| R1515 | 7030005321 | S.RES ERA3YED 103V (10K) | T | 133.5/160.8 |
| R1516 | 7310005090 | S.TRI RH03ADC13X (1K) | T | 119.2/157.7 |
| R1517 | 7030005321 | S.RES ERA3YED 103V (10K) | T | 115.3/158 |
| R1518 | 7030005321 | S.RES ERA3YED 103V (10K) | T | 134.8/160.8 |
| R1519 | 7030005321 | S.RES ERA3YED 103V (10K) | T | 131.7/171.7 |
| R1520 | 7030005321 | S.RES ERA3YED 103V (10K) | T | 136.1/160.8 |
| R1521 | 7030010980 | S.RES ERA3YHD 470V (47) | T | 126.5/133 |
| R1522 | 7030009841 | S.RES ERA3YHD 330V (33) | T | 126/141.1 |
| R1523 | 7030009851 | S.RES ERA3YED 271V (270) | T | 123.7/146.3 |
| R1524 | 7030011050 | S.RES ERA3YHD 100V (10) | T | 122.4/143.5 |
| R1525 | 7030007230 | S.RES ERA3YED 102V (1K) | B | 128.8/147 |
| R1526 | 7030003460 | S.RES ERJ3GEYJ 152 V (1.5K) | B | 137.7/142.1 |
| R1527 | 7030007230 | S.RES ERA3YED 102V (1K) | T | 119.8/146.3 |
| R1528 | 7030007230 | S.RES ERA3YED 102V (1K) | T | 121.1/146.3 |
| R1529 | 7030007230 | S.RES ERA3YED 102V (1K) | T | 115.3/152.3 |
| R1530 | 7030003380 | S.RES ERJ3GEYJ 331 V (330) | T | 128/151.6 |
| R1531 | 7030003380 | S.RES ERJ3GEYJ 331 V (330) | T | 128/155.5 |
| R1532 | 7030005321 | S.RES ERA3YED 103V (10K) | T | 124.1/160.8 |
| R1533 | 7030005321 | S.RES ERA3YED 103V (10K) | T | 128/160.8 |
| R1534 | 7030005321 | S.RES ERA3YED 103V (10K) | T | 122.8/160.8 |
| R1535 | 7030005321 | S.RES ERA3YED 103V (10K) | T | 121.5/160.8 |
| R1536 | 7030005321 | S.RES ERA3YED 103V (10K) | T | 129/171.7 |
| R1537 | 7030003320 | S.RES ERJ3GEYJ 101 V (100) | T | 115.5/164.5 |
| R1538 | 7030003320 | S.RES ERJ3GEYJ 101 V (100) | T | 107.1/170.1 |
| R1539 | 7030008061 | S.RES ERA3YED 222V (2.2K) | B | 131.8/176.4 |
| R1540 | 7030010390 | S.RES ERA3YED 821V (820) | B | 128.7/177.1 |
| R1541 | 7030003320 | S.RES ERJ3GEYJ 101 V (100) | T | 107.1/178.8 |
| R1542 | 7030003320 | S.RES ERJ3GEYJ 101 V (100) | T | 115.5/173.2 |
| R1543 | 7030009691 | S.RES ERA3YED 101V (100) | B | 130.6/179 |
| R1651 | 7030003380 | S.RES ERJ3GEYJ 331 V (330) | B | 100.9/144.8 |
| R1652 | 7030003220 | S.RES ERJ3GEYJ 150 V (15) | B | 102.7/144.8 |
| R1653 | 7030003380 | S.RES ERJ3GEYJ 331 V (330) | B | 101.9/142.9 |
| R1654 | 7030010980 | S.RES ERA3YHD 470V (47) | B | 105.5/142.2 |
| R1655 | 7030009861 | S.RES ERA3YED 471V (470) | B | 108.8/140 |
| R1656 | 7030003630 | S.RES ERJ3GEYJ 393 V (39K) | B | 108.3/142.2 |
| R1657 | 7030005871 | S.RES ERA3YKD 104V (100K) | T | 108/133.1 |
| R1658 | 7030003320 | S.RES ERJ3GEYJ 101 V (100) | T | 110.6/133.1 |
| R1659 | 7030009691 | S.RES ERA3YED 101V (100) | T | 115.8/124.9 |
| R1660 | 7030009691 | S.RES ERA3YED 101V (100) | T | 115.8/128.7 |
| R1661 | 7030005321 | S.RES ERA3YED 103V (10K) | T | 135.1/175.4 |
| R1662 | 7030005321 | S.RES ERA3YED 103V (10K) | T | 135.2/172.8 |
| R1663 | 7030005321 | S.RES ERA3YED 103V (10K) | T | 144.3/175.4 |
| R1664 | 7030005321 | S.RES ERA3YED 103V (10K) | T | 139.9/172.1 |
| R1665 | 7030003320 | S.RES ERJ3GEYJ 101 V (100) | T | 109.3/133.1 |
| R1667 | 7030003360 | S.RES ERJ3GEYJ 221 V (220) | T | 139.2/170.2 |
| R1668 | 7030003360 | S.RES ERJ3GEYJ 221 V (220) | T | 141.8/170.2 |
| R1670 | 7030003800 | S.RES ERJ3GEYJ 105 V (1M) | T | 140.2/164.1 |
| R1673 | 7030007230 | S.RES ERA3YED 102V (1K) | B | 146/174.5 |
| R1674 | 7030009851 | S.RES ERA3YED 271V (270) | B | 145.1/177.1 |
| R1675 | 7030009591 | S.RES ERA3YED 472V (4.7K) | T | 136.6/170.2 |
| R1677 | 7030009591 | S.RES ERA3YED 472V (4.7K) | T | 143.1/170.2 |
| R1701 | 7030003360 | S.RES ERJ3GEYJ 221 V (220) | T | 162.4/147.4 |
| R1703 | 7030003360 | S.RES ERJ3GEYJ 221 V (220) | T | 159.8/147.4 |
| R1704 | 7030003360 | S.RES ERJ3GEYJ 221 V (220) | T | 158.5/147.4 |
| R1706 | 7030003360 | S.RES ERJ3GEYJ 221 V (220) | T | 155.9/147.4 |
| R1707 | 7030003360 | S.RES ERJ3GEYJ 221 V (220) | T | 154.6/147.4 |
| R1708 | 7030003360 | S.RES ERJ3GEYJ 221 V (220) | T | 153.3/147.4 |

## [RXPLL-B UNIT]

| REF NO. | PARTS NO. | DESCRIPTION | M. | H/V LOCATION |
|---|---|---|---|---|
| R1709 | 7030003480 | S.RES ERJ3GEYJ 222 V (2.2K) | T | 149.7/159.3 |
| R1710 | 7030003480 | S.RES ERJ3GEYJ 222 V (2.2K) | T | 148.4/159.3 |
| R1711 | 7030003540 | S.RES ERJ3GEYJ 682 V (6.8K) | T | 147.1/159.3 |
| R1712 | 7030003540 | S.RES ERJ3GEYJ 682 V (6.8K) | T | 145.8/159.3 |
| R1713 | 7030003660 | S.RES ERJ3GEYJ 683 V (68K) | T | 145.8/157.2 |
| R1714 | 7030003660 | S.RES ERJ3GEYJ 683 V (68K) | T | 145.8/155.9 |
| R1715 | 7030003540 | S.RES ERJ3GEYJ 682 V (6.8K) | T | 143.9/164.8 |
| R1716 | 7030007230 | S.RES ERA3YED 102V (1K) | T | 164.2/164.8 |
| R1717 | 7030007230 | S.RES ERA3YED 102V (1K) | T | 164.2/163.5 |
| R1718 | 7030007230 | S.RES ERA3YED 102V (1K) | T | 164.2/162.2 |
| R1719 | 7030003660 | S.RES ERJ3GEYJ 683 V (68K) | T | 144.3/166.8 |
| | | | | |
| C1 | 4030011600 | S.CER C1608 JB 1E 104K-T | T | 10.8/18.2 |
| C2 | 4030006880 | S.CER C1608 JB 1H 472K-T | T | 25.7/29.5 |
| C14 | 4030006880 | S.CER C1608 JB 1H 472K-T | T | 37.7/12.5 |
| C15 | 4030006880 | S.CER C1608 JB 1H 472K-T | T | 31.2/15.4 |
| C16 | 4030006880 | S.CER C1608 JB 1H 472K-T | T | 35.1/15.4 |
| C17 | 4030006880 | S.CER C1608 JB 1H 472K-T | T | 13.8/12.6 |
| C18 | 4030006880 | S.CER C1608 JB 1H 472K-T | T | 16.8/12.6 |
| C19 | 4030006880 | S.CER C1608 JB 1H 472K-T | T | 29.5/12.6 |
| C20 | 4030006880 | S.CER C1608 JB 1H 472K-T | T | 87.4/127.8 |
| C21 | 4030006880 | S.CER C1608 JB 1H 472K-T | T | 88.7/127.8 |
| C22 | 4030006880 | S.CER C1608 JB 1H 472K-T | T | 90/127.8 |
| C30 | 4030011600 | S.CER C1608 JB 1E 104K-T | T | 19.1/112.4 |
| C31 | 4030011600 | S.CER C1608 JB 1E 104K-T | T | 20.4/113.7 |
| C32 | 4030011600 | S.CER C1608 JB 1E 104K-T | T | 24.3/111.1 |
| C51 | 4510008520 | S.ELE EEE1CA470SP | T | 84/20.3 |
| C52 | 4030011600 | S.CER C1608 JB 1E 104K-T | T | 78.9/23.7 |
| C53 | 4030011600 | S.CER C1608 JB 1E 104K-T | T | 75.1/23.7 |
| C54 | 4510008500 | S.ELE EEE1CA101WP | T | 70/20.3 |
| C61 | 4510008520 | S.ELE EEE1CA470SP | T | 62.9/20.3 |
| C62 | 4030011600 | S.CER C1608 JB 1E 104K-T | B | 58.2/19.9 |
| C63 | 4030011600 | S.CER C1608 JB 1E 104K-T | B | 54.8/19.9 |
| C64 | 4510008500 | S.ELE EEE1CA101WP | T | 50.1/20.3 |
| C101 | 4030006880 | S.CER C1608 JB 1H 472K-T | T | 39.7/80.7 |
| C102 | 4030011600 | S.CER C1608 JB 1E 104K-T | T | 41.8/79.9 |
| C103 | 4510008540 | S.ELE EEE1CA100SR | T | 40.2/76.8 |
| C104 | 4030011600 | S.CER C1608 JB 1E 104K-T | T | 21.4/100.2 |
| C105 | 4030011600 | S.CER C1608 JB 1E 104K-T | T | 21.4/88.2 |
| C106 | 4030011600 | S.CER C1608 JB 1E 104K-T | T | 21.4/84.4 |
| C107 | 4030011600 | S.CER C1608 JB 1E 104K-T | T | 24.4/79.8 |
| C108 | 4030011600 | S.CER C1608 JB 1E 104K-T | T | 27/79.8 |
| C109 | 4030011600 | S.CER C1608 JB 1E 104K-T | T | 30.8/79.8 |
| C110 | 4030011600 | S.CER C1608 JB 1E 104K-T | T | 36.8/79.8 |
| C111 | 4030011600 | S.CER C1608 JB 1E 104K-T | T | 41.2/88.5 |
| C112 | 4030011600 | S.CER C1608 JB 1E 104K-T | T | 41.3/82.6 |
| C114 | 4030011600 | S.CER C1608 JB 1E 104K-T | T | 39.5/98.4 |
| C115 | 4030011600 | S.CER C1608 JB 1E 104K-T | T | 38.1/98.4 |
| C116 | 4030011600 | S.CER C1608 JB 1E 104K-T | T | 35.3/99.6 |
| C117 | 4030011600 | S.CER C1608 JB 1E 104K-T | T | 23.3/98.8 |
| C118 | 4030011600 | S.CER C1608 JB 1E 104K-T | T | 42.6/82.6 |
| C120 | 4030006880 | S.CER C1608 JB 1H 472K-T | T | 36.7/101.5 |
| C121 | 4030011600 | S.CER C1608 JB 1E 104K-T | T | 39.5/101.5 |
| C125 | 4030011600 | S.CER C1608 JB 1E 104K-T | T | 14.6/83.1 |
| C129 | 4030011600 | S.CER C1608 JB 1E 104K-T | T | 33.4/79.8 |
| C130 | 4030017810 | S.CER C1608 CH 1H 102J-T | B | 47.6/106.6 |
| C131 | 4030011600 | S.CER C1608 JB 1E 104K-T | T | 30.4/73.2 |
| C132 | 4030011600 | S.CER C1608 JB 1E 104K-T | T | 35.5/73.2 |
| C133 | 4030006880 | S.CER C1608 JB 1H 472K-T | B | 43.5/98.6 |
| C134 | 4030006880 | S.CER C1608 JB 1H 472K-T | B | 43.5/96.8 |
| C135 | 4030006880 | S.CER C1608 JB 1H 472K-T | T | 46/95.5 |
| C136 | 4030006880 | S.CER C1608 JB 1H 472K-T | T | 46/94.2 |
| C137 | 4030006880 | S.CER C1608 JB 1H 472K-T | T | 46/90.3 |
| C138 | 4030006880 | S.CER C1608 JB 1H 472K-T | T | 46.1/87.7 |
| C139 | 4030006880 | S.CER C1608 JB 1H 472K-T | B | 43.5/100.4 |
| C141 | 4030004740 | S.CER C2012 JB 1H 472K-T | B | 34.3/85.1 |
| C142 | 4550007470 | S.TAN F931A107MNMBMA | B | 19.4/87.4 |
| C150 | 4340000050 | S.MYL ECH-U 1C472JB5 | T | 16.3/64.6 |
| C151 | 4550007520 | S.TAN F931A106MAABMA | B | 38.6/92.1 |
| C152 | 4030007070 | S.CER C1608 CH 1H 330J-T | T | 19.2/59.9 |
| C153 | 4030009910 | S.CER C1608 CH 1H 040B-T | T | 21.3/55.4 |
| C154 | 4610001850 | S.TRI TZB4R200AB10R00 (TZBX4R200BA110) | T | 17.6/55.1 |
| C155 | 4030016550 | S.CER CM105 CH 151G 50AT | T | 24.1/55.4 |
| C156 | 4030016550 | S.CER CM105 CH 151G 50AT | T | 26.9/55.4 |
| C157 | 4030016550 | S.CER CM105 CH 151G 50AT | T | 26.9/56.7 |
| C158 | 4030006880 | S.CER C1608 JB 1H 472K-T | T | 23.3/53.1 |
| C159 | 4030006880 | S.CER C1608 JB 1H 472K-T | B | 23/51.9 |
| C161 | 4510008540 | S.ELE EEE1CA100SR | T | 31.3/61 |
| C162 | 4030009920 | S.CER C1608 CH 1H 050B-T | B | 33.6/53 |
| C163 | 4030011600 | S.CER C1608 JB 1E 104K-T | B | 36.9/59.6 |
| C164 | 4030006880 | S.CER C1608 JB 1H 472K-T | B | 30.3/54.8 |
| C165 | 4030006880 | S.CER C1608 JB 1H 472K-T | B | 30.8/74 |
| C166 | 4030011600 | S.CER C1608 JB 1E 104K-T | B | 34.9/78.2 |
| C167 | 4030006880 | S.CER C1608 JB 1H 472K-T | B | 37.4/74 |
| C201 | 4030011340 | S.CER C1608 CH 1H 471J-T | T | 33.8/40.4 |
| C202 | 4510009280 | S.ELE EEE1EA4R7SR | T | 26.5/44 |
| C203 | 4030006900 | S.CER C1608 JB 1H 103K-T | T | 32.5/38.3 |
| C204 | 4030006880 | S.CER C1608 JB 1H 472K-T | T | 25.4/35.3 |
| C205 | 4030006880 | S.CER C1608 JB 1H 472K-T | T | 25.4/34 |
| C206 | 4030006880 | S.CER C1608 JB 1H 472K-T | T | 31.1/43 |
| C207 | 4030007030 | S.CER C1608 CH 1H 150J-T | B | 46.8/32.4 |
| C208 | 4030007030 | S.CER C1608 CH 1H 150J-T | T | 32.5/41 |
| C209 | 4030011340 | S.CER C1608 CH 1H 471J-T | T | 44.1/26.1 |
| C210 | 4550007620 | S.TAN F931V224MAABMA | T | 46.2/26.7 |
| C211 | 4550007300 | S.TAN F931A335MAABMA | B | 46.1/41.6 |
| C219 | 4030006880 | S.CER C1608 JB 1H 472K-T | T | 33.8/37.8 |
| C220 | 4030007130 | S.CER C1608 CH 1H 101J-T | T | 54.7/37.6 |
| C221 | 4030009520 | S.CER C1608 CH 1H 020B-T | T | 54.7/32 |
| C222 | 4610001860 | S.TRI TZB4Z060AB10R00 (TZBX4R200BA110) | T | 68.1/32.6 |
| C223 | 4030007080 | S.CER C1608 CH 1H 390J-T | T | 73.2/36.3 |
| C224 | 4030007010 | S.CER C1608 CH 1H 100D-T | T | 73.2/38.9 |
| C225 | 4030007050 | S.CER C1608 CH 1H 220J-T | T | 73.6/30.9 |

M.=Mounted side (T: Mounted on the Top side, B: Mounted on the Bottom side)
S.=Surface mount

## [RXPLL-B UNIT]

| REF NO. | PARTS NO. | DESCRIPTION | M. | H/V LOCATION |
|---|---|---|---|---|
| C226 | 4030006880 | S.CER C1608 JB 1H 472K-T | T | 71/30.9 |
| C227 | 4030009920 | S.CER C1608 CH 1H 050B-T | T | 75.1/32.6 |
| C228 | 4510008540 | S.ELE EEE1CA100SR | T | 68.8/37.8 |
| C229 | 4030009530 | S.CER C1608 CH 1H 030B-T | T | 77.8/32.6 |
| C230 | 4030007100 | S.CER C1608 CH 1H 560J-T | T | 54.7/50 |
| C231 | 4030009510 | S.CER C1608 CH 1H 010B-T | T | 54.7/44.6 |
| C232 | 4610001860 | S.TRI TZB4Z060AB10R00 (TZBX4R200BA110) | T | 68.1/45.1 |
| C233 | 4030007070 | S.CER C1608 CH 1H 330J-T | T | 73.2/48.8 |
| C234 | 4030009920 | S.CER C1608 CH 1H 050B-T | T | 73.2/51.4 |
| C235 | 4030007020 | S.CER C1608 CH 1H 120J-T | T | 73.6/43.3 |
| C236 | 4030006880 | S.CER C1608 JB 1H 472K-T | T | 71/43.3 |
| C237 | 4030009910 | S.CER C1608 CH 1H 040B-T | T | 75.1/45 |
| C238 | 4510008540 | S.ELE EEE1CA100SR | T | 68.8/50.3 |
| C239 | 4030009910 | S.CER C1608 CH 1H 040B-T | T | 77.8/45 |
| C240 | 4030007080 | S.CER C1608 CH 1H 390J-T | T | 54.7/62.5 |
| C241 | 4030009510 | S.CER C1608 CH 1H 010B-T | T | 54.7/57.1 |
| C242 | 4610001860 | S.TRI TZB4Z060AB10R00 (TZBX4R200BA110) | T | 68.1/57.6 |
| C243 | 4030007060 | S.CER C1608 CH 1H 270J-T | T | 73.2/61.3 |
| C244 | 4030009910 | S.CER C1608 CH 1H 040B-T | T | 73.2/63.9 |
| C245 | 4030009920 | S.CER C1608 CH 1H 050B-T | T | 73.6/55.8 |
| C246 | 4030006880 | S.CER C1608 JB 1H 472K-T | T | 71/55.9 |
| C247 | 4030009530 | S.CER C1608 CH 1H 030B-T | T | 75.1/57.5 |
| C248 | 4510008540 | S.ELE EEE1CA100SR | T | 68.8/62.9 |
| C250 | 4030007100 | S.CER C1608 CH 1H 560J-T | T | 54.7/75 |
| C251 | 4030009540 | S.CER C1608 CH 1H 1R5B-T | T | 54.7/69.6 |
| C252 | 4610001810 | S.TRI TZB4Z030AB10R00 (TZBX4Z030BA110) | T | 68.1/70.1 |
| C253 | 4030007080 | S.CER C1608 CH 1H 390J-T | T | 73.2/73.8 |
| C254 | 4030009530 | S.CER C1608 CH 1H 030B-T | T | 73.2/76.4 |
| C255 | 4030006990 | S.CER C1608 CH 1H 080D-T | T | 73.6/68.4 |
| C256 | 4030006880 | S.CER C1608 JB 1H 472K-T | T | 71/68.4 |
| C257 | 4030007010 | S.CER C1608 CH 1H 100D-T | T | 75.1/70 |
| C258 | 4510008540 | S.ELE EEE1CA100SR | T | 68.8/75.4 |
| C260 | 4030007110 | S.CER C1608 CH 1H 680J-T | T | 54.7/87.5 |
| C262 | 4610001810 | S.TRI TZB4Z030AB10R00 (TZBX4Z030BA110) | T | 68.1/82.6 |
| C263 | 4030007080 | S.CER C1608 CH 1H 390J-T | T | 73.2/86.3 |
| C264 | 4030009530 | S.CER C1608 CH 1H 030B-T | T | 73.2/88.9 |
| C265 | 4030011770 | S.CER C1608 CH 1H 060B-T | T | 73.6/80.9 |
| C266 | 4030006880 | S.CER C1608 JB 1H 472K-T | T | 71/80.9 |
| C267 | 4030007010 | S.CER C1608 CH 1H 100D-T | T | 75.1/82.5 |
| C268 | 4510008540 | S.ELE EEE1CA100SR | T | 68.8/87.9 |
| C272 | 4610001860 | S.TRI TZB4Z060AB10R00 (TZBX4R200BA110) | T | 68.1/95.1 |
| C273 | 4030007050 | S.CER C1608 CH 1H 220J-T | T | 73.2/98.2 |
| C274 | 4030009530 | S.CER C1608 CH 1H 030B-T | T | 73.2/100.8 |
| C275 | 4030009920 | S.CER C1608 CH 1H 050B-T | T | 73.6/92.8 |
| C276 | 4030006880 | S.CER C1608 JB 1H 472K-T | T | 71/92.8 |
| C277 | 4030007010 | S.CER C1608 CH 1H 100D-T | T | 75.1/95 |
| C278 | 4510008540 | S.ELE EEE1CA100SR | T | 68.8/100.4 |
| C283 | 4030017810 | S.CER C1608 CH 1H 102J-T | T | 82.1/36.3 |
| C284 | 4030006880 | S.CER C1608 JB 1H 472K-T | T | 84.5/34.3 |
| C285 | 4030017810 | S.CER C1608 CH 1H 102J-T | T | 82.1/48.8 |
| C286 | 4030006880 | S.CER C1608 JB 1H 472K-T | T | 84.5/46.9 |
| C287 | 4030017810 | S.CER C1608 CH 1H 102J-T | T | 82.1/61.3 |
| C288 | 4030006880 | S.CER C1608 JB 1H 472K-T | T | 83.9/57.5 |
| C289 | 4030017810 | S.CER C1608 CH 1H 102J-T | T | 82.1/73.8 |
| C290 | 4030006880 | S.CER C1608 JB 1H 472K-T | T | 84.3/70.4 |
| C291 | 4030017810 | S.CER C1608 CH 1H 102J-T | T | 82.1/86.3 |
| C292 | 4030006880 | S.CER C1608 JB 1H 472K-T | T | 84.4/84.4 |
| C293 | 4030017810 | S.CER C1608 CH 1H 102J-T | T | 82.1/98.7 |
| C294 | 4030006880 | S.CER C1608 JB 1H 472K-T | T | 83.2/93.9 |
| C297 | 4030009920 | S.CER C1608 CH 1H 050B-T | T | 52.6/59.4 |
| C299 | 4030007050 | S.CER C1608 CH 1H 220J-T | T | 52.6/84.4 |
| C301 | 4030006880 | S.CER C1608 JB 1H 472K-T | T | 89.3/30.6 |
| C302 | 4030006880 | S.CER C1608 JB 1H 472K-T | T | 94.9/28 |
| C303 | 4030006880 | S.CER C1608 JB 1H 472K-T | B | 92.6/39.8 |
| C304 | 4030006880 | S.CER C1608 JB 1H 472K-T | B | 92.6/45.2 |
| C305 | 4030006880 | S.CER C1608 JB 1H 472K-T | B | 89.1/48.8 |
| C306 | 4030006880 | S.CER C1608 JB 1H 472K-T | B | 89.1/50.6 |
| C309 | 4030017810 | S.CER C1608 CH 1H 102J-T | T | 94.9/42.7 |
| C310 | 4030011600 | S.CER C1608 JB 1E 104K-T | T | 92.8/42.1 |
| C311 | 4510008520 | S.ELE EEE1CA470SP | T | 93.4/47.4 |
| C312 | 4030006880 | S.CER C1608 JB 1H 472K-T | B | 89/27.4 |
| C313 | 4030006880 | S.CER C1608 JB 1H 472K-T | B | 93.7/23.1 |
| C331 | 4030007110 | S.CER C1608 CH 1H 680J-T | T | 89.3/32.2 |
| C332 | 4030007160 | S.CER C1608 CH 1H 181J-T | T | 92.1/33.5 |
| C333 | 4030007110 | S.CER C1608 CH 1H 680J-T | T | 89.3/33.5 |
| C334 | 4030007050 | S.CER C1608 CH 1H 220J-T | T | 94.9/36 |
| C335 | 4030006980 | S.CER C1608 CH 1H 070D-T | T | 94.9/37.4 |
| C336 | 4030007030 | S.CER C1608 CH 1H 150J-T | T | 92.1/38.8 |
| C337 | 4030007050 | S.CER C1608 CH 1H 220J-T | T | 94.9/38.8 |
| C341 | 4030006880 | S.CER C1608 JB 1H 472K-T | T | 94.9/40.1 |
| C342 | 4030006880 | S.CER C1608 JB 1H 472K-T | T | 86.5/33.5 |
| C344 | 4030011600 | S.CER C1608 JB 1E 104K-T | T | 94.9/41.4 |
| C351 | 4030017810 | S.CER C1608 CH 1H 102J-T | T | 94.9/61.6 |
| C352 | 4030011600 | S.CER C1608 JB 1E 104K-T | T | 94.9/62.9 |
| C353 | 4510008520 | S.ELE EEE1CA470SP | T | 93.4/67.1 |
| C354 | 4030006880 | S.CER C1608 JB 1H 472K-T | T | 89.3/51.7 |
| C355 | 4030006880 | S.CER C1608 JB 1H 472K-T | T | 94.9/55.1 |
| C356 | 4030006880 | S.CER C1608 JB 1H 472K-T | T | 89.2/58.4 |
| C357 | 4030006880 | S.CER C1608 JB 1H 472K-T | T | 94.9/57.7 |
| C358 | 4030006880 | S.CER C1608 JB 1H 472K-T | B | 89.2/60.3 |
| C359 | 4030006880 | S.CER C1608 JB 1H 472K-T | B | 92.6/62.1 |
| C360 | 4030006880 | S.CER C1608 JB 1H 472K-T | B | 89.9/66.9 |
| C361 | 4030006880 | S.CER C1608 JB 1H 472K-T | T | 89.3/83.4 |
| C363 | 4030006880 | S.CER C1608 JB 1H 472K-T | T | 86.1/60.9 |
| C364 | 4030017810 | S.CER C1608 CH 1H 102J-T | T | 86.7/52.3 |
| C365 | 4030006880 | S.CER C1608 JB 1H 472K-T | T | 90.3/59.9 |
| C421 | 4030006880 | S.CER C1608 JB 1H 472K-T | T | 94.1/88.5 |
| C423 | 4030006880 | S.CER C1608 JB 1H 472K-T | T | 94.1/93.3 |
| C426 | 4030006880 | S.CER C1608 JB 1H 472K-T | B | 94.6/87.3 |
| C427 | 4030006880 | S.CER C1608 JB 1H 472K-T | T | 92.1/86.5 |

## [RXPLL-B UNIT]

| REF NO. | PARTS NO. | DESCRIPTION | M. | H/V LOCATION |
|---|---|---|---|---|
| C441 | 4030007040 | S.CER C1608 CH 1H 180J-T | T | 94.9/71.3 |
| C442 | 4030007040 | S.CER C1608 CH 1H 180J-T | T | 94.9/72.6 |
| C443 | 4030007020 | S.CER C1608 CH 1H 120J-T | T | 92.1/74.2 |
| C444 | 4030007080 | S.CER C1608 CH 1H 390J-T | T | 94.9/73.9 |
| C445 | 4030011770 | S.CER C1608 CH 1H 060B-T | T | 94.9/75.2 |
| C446 | 4030007060 | S.CER C1608 CH 1H 270J-T | T | 94.9/79.1 |
| C447 | 4030007110 | S.CER C1608 CH 1H 680J-T | T | 92.8/78.9 |
| C448 | 4030006880 | S.CER C1608 JB 1H 472K-T | T | 94.9/76.5 |
| C449 | 4030006880 | S.CER C1608 JB 1H 472K-T | T | 88.1/69.1 |
| C451 | 4030007110 | S.CER C1608 CH 1H 680J-T | T | 92/82.1 |
| C452 | 4030007160 | S.CER C1608 CH 1H 181J-T | T | 92/80.8 |
| C453 | 4030011600 | S.CER C1608 JB 1E 104K-T | T | 94.9/77.8 |
| C501 | 4030006880 | S.CER C1608 JB 1H 472K-T | T | 38.9/131.2 |
| C502 | 4030011600 | S.CER C1608 JB 1E 104K-T | T | 38.9/129.9 |
| C503 | 4510008540 | S.ELE EEE1CA100SR | T | 36.6/126.7 |
| C504 | 4030011600 | S.CER C1608 JB 1E 104K-T | T | 21.4/153.1 |
| C505 | 4550007470 | S.TAN F931A107MNMBMA | B | 19.2/140.3 |
| C506 | 4030011600 | S.CER C1608 JB 1E 104K-T | T | 21.4/141 |
| C507 | 4030011600 | S.CER C1608 JB 1E 104K-T | T | 21.4/137.1 |
| C509 | 4030011600 | S.CER C1608 JB 1E 104K-T | T | 25.8/132.6 |
| C510 | 4030011600 | S.CER C1608 JB 1E 104K-T | T | 28.4/132.6 |
| C511 | 4030011600 | S.CER C1608 JB 1E 104K-T | T | 32.2/132.6 |
| C512 | 4030011600 | S.CER C1608 JB 1E 104K-T | T | 34.8/132.6 |
| C513 | 4030011600 | S.CER C1608 JB 1E 104K-T | T | 37.4/132.6 |
| C514 | 4030011600 | S.CER C1608 JB 1E 104K-T | T | 41.2/136 |
| C515 | 4030011600 | S.CER C1608 JB 1E 104K-T | T | 41.3/139.7 |
| C516 | 4030011600 | S.CER C1608 JB 1E 104K-T | T | 41.3/142.3 |
| C517 | 4030011600 | S.CER C1608 JB 1E 104K-T | T | 37.6/151.8 |
| C518 | 4030011600 | S.CER C1608 JB 1E 104K-T | T | 34.8/151.8 |
| C519 | 4030011600 | S.CER C1608 JB 1E 104K-T | T | 31.2/151.8 |
| C520 | 4030011600 | S.CER C1608 JB 1E 104K-T | T | 23.3/151.9 |
| C521 | 4030011600 | S.CER C1608 JB 1E 104K-T | T | 41.6/134 |
| C522 | 4550007220 | S.TAN F931A476MCMBMA | B | 40.7/145 |
| C525 | 4030006880 | S.CER C1608 JB 1H 472K-T | T | 35.3/154.5 |
| C526 | 4030011600 | S.CER C1608 JB 1E 104K-T | T | 36.6/154.5 |
| C531 | 4030006880 | S.CER C1608 JB 1H 472K-T | T | 14.6/137.5 |
| C532 | 4030007070 | S.CER C1608 CH 1H 330J-T | T | 17.2/137.5 |
| C533 | 4030007110 | S.CER C1608 CH 1H 680J-T | T | 17.3/133.4 |
| C534 | 4030007110 | S.CER C1608 CH 1H 680J-T | T | 16.8/130.1 |
| C535 | 4030007070 | S.CER C1608 CH 1H 330J-T | T | 18.1/127 |
| C536 | 4030006880 | S.CER C1608 JB 1H 472K-T | T | 20.9/127.6 |
| C537 | 4030006880 | S.CER C1608 JB 1H 472K-T | T | 27.2/126.4 |
| C540 | 4030006880 | S.CER C1608 JB 1H 472K-T | B | 56.3/142.8 |
| C541 | 4510008540 | S.ELE EEE1CA100SR | T | 51/139.3 |
| C542 | 4340000260 | S.MYL ECPU1C104MA5 | B | 47.8/128.7 |
| C543 | 4030007060 | S.CER C1608 CH 1H 270J-T | T | 62.2/136.4 |
| C545 | 4030007060 | S.CER C1608 CH 1H 270J-T | T | 70/137.1 |
| C546 | 4610001830 | S.TRI TZB4S100AB10R00 (TZBX4N100BA110) | T | 65.8/138.7 |
| C547 | 4030007130 | S.CER C1608 CH 1H 101J-T | T | 71.3/137.1 |
| C548 | 4030007010 | S.CER C1608 CH 1H 100D-T | T | 71.3/139.9 |
| C549 | 4030007050 | S.CER C1608 CH 1H 220J-T | T | 68.9/145.1 |
| C550 | 4030006880 | S.CER C1608 JB 1H 472K-T | T | 66.3/143 |
| C551 | 4030009520 | S.CER C1608 CH 1H 020B-T | T | 71.3/142.8 |
| C552 | 4030017810 | S.CER C1608 CH 1H 102J-T | B | 54.6/139.5 |
| C553 | 4030006880 | S.CER C1608 JB 1H 472K-T | B | 56.3/139.5 |
| C554 | 4510008500 | S.ELE EEE1CA101WP | T | 50.9/146.6 |
| C555 | 4030006880 | S.CER C1608 JB 1H 472K-T | B | 47.7/149.5 |
| C556 | 4550007220 | S.TAN F931A476MCMBMA | B | 76.4/136.1 |
| C558 | 4550007520 | S.TAN F931A106MAABMA | B | 43.4/132.5 |
| C559 | 4550007400 | S.TAN F931A225MAABMA | B | 43.4/129.9 |
| C561 | 4550007520 | S.TAN F931A106MAABMA | T | 70/157.5 |
| C562 | 4030006880 | S.CER C1608 JB 1H 472K-T | T | 68.3/155.5 |
| C563 | 4030017810 | S.CER C1608 CH 1H 102J-T | B | 60.1/158 |
| C564 | 4030006880 | S.CER C1608 JB 1H 472K-T | B | 58.8/158 |
| C565 | 4510008520 | S.ELE EEE1CA470SP | T | 50.9/155.6 |
| C566 | 4030006880 | S.CER C1608 JB 1H 472K-T | T | 64.4/155.5 |
| C571 | 4030006880 | S.CER C1608 JB 1H 472K-T | B | 58.5/161.3 |
| C573 | 4030007040 | S.CER C1608 CH 1H 180J-T | B | 72.5/166.8 |
| C574 | 4030009510 | S.CER C1608 CH 1H 010B-T | T | 72.6/169.1 |
| C575 | 4030007040 | S.CER C1608 CH 1H 180J-T | T | 72.6/171.9 |
| C580 | 4030006880 | S.CER C1608 JB 1H 472K-T | T | 41.9/152.4 |
| C581 | 4030006880 | S.CER C1608 JB 1H 472K-T | T | 41.9/144.2 |
| C591 | 4030006880 | S.CER C1608 JB 1H 472K-T | T | 63.5/171.2 |
| C592 | 4030007060 | S.CER C1608 CH 1H 270J-T | T | 62.8/163.1 |
| C593 | 4510008540 | S.ELE EEE1CA100SR | T | 54.4/170.7 |
| C594 | 4030006880 | S.CER C1608 JB 1H 472K-T | T | 57.4/171.9 |
| C596 | 4030006880 | S.CER C1608 JB 1H 472K-T | B | 63.7/168.1 |
| C597 | 4030007050 | S.CER C1608 CH 1H 220J-T | T | 62.2/171.2 |
| C601 | 4030006880 | S.CER C1608 JB 1H 472K-T | T | 47.3/116.4 |
| C602 | 4030006880 | S.CER C1608 JB 1H 472K-T | T | 49.5/121.4 |
| C607 | 4030006880 | S.CER C1608 JB 1H 472K-T | T | 51.2/115.4 |
| C608 | 4030006880 | S.CER C1608 JB 1H 472K-T | T | 53.2/115.9 |
| C609 | 4030007100 | S.CER C1608 CH 1H 560J-T | T | 53.2/114.6 |
| C610 | 4030008750 | S.CER C1608 CH 1H 360J-T | T | 55.2/115.4 |
| C611 | 4030007140 | S.CER C1608 CH 1H 121J-T | T | 56.3/113.5 |
| C612 | 4030007020 | S.CER C1608 CH 1H 120J-T | T | 57.1/114.8 |
| C613 | 4030007110 | S.CER C1608 CH 1H 680J-T | T | 56.3/112.2 |
| C651 | 4030006880 | S.CER C1608 JB 1H 472K-T | T | 13.5/174 |
| C652 | 4030011600 | S.CER C1608 JB 1E 104K-T | T | 12.7/176.3 |
| C653 | 4510008540 | S.ELE EEE1CA100SR | T | 6.8/172.6 |
| C654 | 4030011600 | S.CER C1608 JB 1E 104K-T | B | 17.3/170.4 |
| C655 | 4030011600 | S.CER C1608 JB 1E 104K-T | T | 25.9/161.4 |
| C656 | 4030011600 | S.CER C1608 JB 1E 104K-T | T | 25.8/177.1 |
| C657 | 4030011600 | S.CER C1608 JB 1E 104K-T | T | 31.7/169.3 |
| C658 | 4030011600 | S.CER C1608 JB 1E 104K-T | T | 13.5/172.7 |
| C659 | 4030011600 | S.CER C1608 JB 1E 104K-T | T | 16.5/163.4 |
| C660 | 4030006880 | S.CER C1608 JB 1H 472K-T | T | 17.6/161.4 |
| C661 | 4030011600 | S.CER C1608 JB 1E 104K-T | T | 13.3/166.1 |
| C662 | 4550007220 | S.TAN F931A476MCMBMA | B | 30.6/170.9 |
| C680 | 4030006880 | S.CER C1608 JB 1H 472K-T | T | 34.3/177.1 |
| C681 | 4030007160 | S.CER C1608 CH 1H 181J-T | T | 40.3/177.1 |
| C682 | 4030007140 | S.CER C1608 CH 1H 121J-T | T | 39.6/175.2 |
| C683 | 4030011330 | S.CER C1608 CH 1H 391J-T | T | 40.9/175.2 |
| C684 | 4030007080 | S.CER C1608 CH 1H 390J-T | B | 39.3/174 |

M.=Mounted side (T: Mounted on the Top side, B: Mounted on the Bottom side)
S.=Surface mount

## [RXPLL-B UNIT]

| REF NO. | PARTS NO. | DESCRIPTION | | M. | H/V LOCATION |
|---|---|---|---|---|---|
| C685 | 4030011280 | S.CER C1608 CH 1H 271J-T | | B | 42.3/172.6 |
| C686 | 4030010760 | S.CER C1608 CH 1H 331J-T | | B | 39.3/170.6 |
| C687 | 4030018580 | S.CER C1608 CH 1H 821J-T | | T | 41/169.7 |
| C688 | 4030010760 | S.CER C1608 CH 1H 331J-T | | B | 37.5/169.7 |
| C689 | 4030011600 | S.CER C1608 JB 1E 104K-T | | T | 37.4/166.4 |
| C690 | 4030011600 | S.CER C1608 JB 1E 104K-T | | T | 37.4/161.3 |
| C691 | 4030011600 | S.CER C1608 JB 1E 104K-T | | T | 46.4/164 |
| C692 | 4030006880 | S.CER C1608 JB 1H 472K-T | | T | 40.3/162.1 |
| C693 | 4030006880 | S.CER C1608 JB 1H 472K-T | | B | 58.4/169.6 |
| C694 | 4030006880 | S.CER C1608 JB 1H 472K-T | | B | 58.4/164.2 |
| C703 | 4030017810 | S.CER C1608 CH 1H 102J-T | | T | 24.3/116.6 |
| C704 | 4030006880 | S.CER C1608 JB 1H 472K-T | | T | 23/116.6 |
| C705 | 4510008500 | S.ELE EEE1CA101WP | | T | 29.4/118.7 |
| C707 | 4030011600 | S.CER C1608 JB 1E 104K-T | | T | 32.1/113.7 |
| C708 | 4030011600 | S.CER C1608 JB 1E 104K-T | | T | 32.1/108.1 |
| C709 | 4030007070 | S.CER C1608 CH 1H 330J-T | | T | 38.8/112.9 |
| C710 | 4030006880 | S.CER C1608 JB 1H 472K-T | | T | 36.2/112.9 |
| C711 | 4030009540 | S.CER C1608 CH 1H 1R5B-T | | B | 39.3/113.6 |
| C712 | 4030007070 | S.CER C1608 CH 1H 330J-T | | T | 36.2/114.2 |
| C713 | 4030006880 | S.CER C1608 JB 1H 472K-T | | T | 42/118.8 |
| C1000 | 4030007050 | S.CER C1608 CH 1H 220J-T | | B | 177.1/13.8 |
| C1002 | 4030006880 | S.CER C1608 JB 1H 472K-T | | B | 153.1/16.2 |
| C1003 | 4030012600 | S.CER C2012 JB 1A 105M-T | | T | 157.4/8.2 |
| C1004 | 4030011600 | S.CER C1608 JB 1E 104K-T | | B | 169.6/8.7 |
| C1005 | 4030011600 | S.CER C1608 JB 1E 104K-T | | T | 162.8/17.2 |
| C1006 | 4030010210 | S.CER C3216 JB 1C 105M-T | | T | 173.8/18.6 |
| C1007 | 4030006880 | S.CER C1608 JB 1H 472K-T | | T | 172.4/23.9 |
| C1008 | 4030006880 | S.CER C1608 JB 1H 472K-T | | T | 160/24 |
| C1009 | 4030006880 | S.CER C1608 JB 1H 472K-T | | T | 147.6/23.8 |
| C1010 | 4030012600 | S.CER C2012 JB 1A 105M-T | | T | 154.5/28.9 |
| C1011 | 4030012600 | S.CER C2012 JB 1A 105M-T | | T | 144.2/29.3 |
| C1012 | 4030010210 | S.CER C3216 JB 1C 105M-T | | T | 144.8/40.2 |
| C1013 | 4030012600 | S.CER C2012 JB 1A 105M-T | | T | 144.2/33.2 |
| C1014 | 4030018810 | S.CER C3216 CH 1H 333J-T | | B | 151.6/48.3 |
| C1015 | 4030012600 | S.CER C2012 JB 1A 105M-T | | T | 163.6/13.8 |
| C1016 | 4030012600 | S.CER C2012 JB 1A 105M-T | | T | 173.6/33.2 |
| C1017 | 4030012600 | S.CER C2012 JB 1A 105M-T | | T | 163.3/33.2 |
| C1020 | 4030012600 | S.CER C2012 JB 1A 105M-T | | B | 170/38.6 |
| C1021 | 4030012600 | S.CER C2012 JB 1A 105M-T | | B | 154/38.6 |
| C1024 | 4030010210 | S.CER C3216 JB 1C 105M-T | | B | 170.5/45.5 |
| C1025 | 4030010210 | S.CER C3216 JB 1C 105M-T | | B | 154.7/45.5 |
| C1026 | 4030010210 | S.CER C3216 JB 1C 105M-T | | T | 171.4/52.7 |
| C1027 | 4030010210 | S.CER C3216 JB 1C 105M-T | | T | 165.6/52.7 |
| C1028 | 4030006880 | S.CER C1608 JB 1H 472K-T | | B | 156.4/65.4 |
| C1029 | 4030006880 | S.CER C1608 JB 1H 472K-T | | T | 168.5/65.4 |
| C1030 | 4030010210 | S.CER C3216 JB 1C 105M-T | | T | 164.5/18 |
| C1031 | 4030012600 | S.CER C2012 JB 1A 105M-T | | B | 169.2/10.8 |
| C1033 | 4550006470 | S.TAN TEESVB2 1D 106M8R | | B | 146.5/47.7 |
| C1034 | 4550006470 | S.TAN TEESVB2 1D 106M8R | | B | 174/52.1 |
| C1035 | 4550006470 | S.TAN TEESVB2 1D 106M8R | | B | 164.6/15.8 |
| C1036 | 4030007120 | S.CER C1608 CH 1H 820J-T | | T | 160.2/12.7 |
| C1037 | 4030007090 | S.CER C1608 CH 1H 470J-T | | B | 149.3/49.3 |
| C1038 | 4030017810 | S.CER C1608 CH 1H 102J-T | | T | 146.6/26.2 |
| C1039 | 4030017810 | S.CER C1608 CH 1H 102J-T | | T | 146.5/41 |
| C1040 | 4030017810 | S.CER C1608 CH 1H 102J-T | | T | 145.3/36.4 |
| C1041 | 4030006990 | S.CER C1608 CH 1H 080D-T | | B | 153.4/31 |
| C1046 | 4030007010 | S.CER C1608 CH 1H 100D-T | | B | 168.4/53.7 |
| | 4010000120 | CER DD104 SL 100D 50V | [USA] | | |
| | 4010000120 | CER DD104 SL 100D 50V | [EUR] | | |
| | 4010000120 | CER DD104 SL 100D 50V | [ITR] | | |
| | 4010000120 | CER DD104 SL 100D 50V | [UK] | | |
| C1048 | 4030006880 | S.CER C1608 JB 1H 472K-T | | B | 170.6/41.6 |
| C1049 | 4030006880 | S.CER C1608 JB 1H 472K-T | | B | 154.6/41.6 |
| C1050 | 4030017810 | S.CER C1608 CH 1H 102J-T | | B | 170.5/49.5 |
| C1051 | 4030017810 | S.CER C1608 CH 1H 102J-T | | B | 154.7/49.4 |
| C1052 | 4030007060 | S.CER C1608 CH 1H 270J-T | | B | 164.1/29.6 |
| C1053 | 4030007110 | S.CER C1608 CH 1H 680J-T | | T | 175.2/77.3 |
| C1054 | 4030007010 | S.CER C1608 CH 1H 100D-T | | B | 175.7/72.4 |
| C1055 | 4030007140 | S.CER C1608 CH 1H 121J-T | | B | 175.7/74.2 |
| C1056 | 4030007050 | S.CER C1608 CH 1H 220J-T | | T | 175.2/76 |
| C1057 | 4030007130 | S.CER C1608 CH 1H 101J-T | | T | 172.1/77.1 |
| C1058 | 4030009920 | S.CER C1608 CH 1H 050B-T | | B | 173.2/12.7 |
| C1060 | 4030017810 | S.CER C1608 CH 1H 102J-T | | T | 178.6/94.4 |
| C1061 | 4030007090 | S.CER C1608 CH 1H 470J-T | | B | 147.7/91.8 |
| C1062 | 4030007170 | S.CER C1608 CH 1H 221J-T | | B | 149.5/91.8 |
| C1064 | 4030007090 | S.CER C1608 CH 1H 470J-T | | T | 148.7/80.1 |
| C1066 | 4030007010 | S.CER C1608 CH 1H 100D-T | | T | 138.6/81.9 |
| C1067 | 4030007010 | S.CER C1608 CH 1H 100D-T | | T | 173.4/77.1 |
| C1070 | 4030006980 | S.CER C1608 CH 1H 070D-T | | T | 137.2/81.9 |
| C1071 | 4030007100 | S.CER C1608 CH 1H 560J-T | | B | 162.2/75.3 |
| C1072 | 4030007170 | S.CER C1608 CH 1H 221J-T | | B | 162/78.7 |
| C1073 | 4030007080 | S.CER C1608 CH 1H 390J-T | | B | 164.1/76.4 |
| C1074 | 4030007060 | S.CER C1608 CH 1H 270J-T | | T | 148.7/78.6 |
| C1081 | 4030006900 | S.CER C1608 JB 1H 103K-T | | B | 156.1/86 |
| C1082 | 4030006900 | S.CER C1608 JB 1H 103K-T | | B | 151.3/91.8 |
| C1083 | 4030006900 | S.CER C1608 JB 1H 103K-T | | B | 151.2/81.6 |
| C1084 | 4030006880 | S.CER C1608 JB 1H 472K-T | | B | 149.4/81.6 |
| C1085 | 4030006880 | S.CER C1608 JB 1H 472K-T | | B | 153/81.6 |
| C1091 | 4030006880 | S.CER C1608 JB 1H 472K-T | | T | 149.3/149.4 |
| C1092 | 4030006880 | S.CER C1608 JB 1H 472K-T | | T | 147/138.5 |
| C1093 | 4030006880 | S.CER C1608 JB 1H 472K-T | | T | 161.3/135.8 |
| C1101 | 4030006900 | S.CER C1608 JB 1H 103K-T | | T | 177/90.9 |
| C1102 | 4030006900 | S.CER C1608 JB 1H 103K-T | | T | 175.4/115.5 |
| C1103 | 4030011600 | S.CER C1608 JB 1E 104K-T | | T | 179.6/116.4 |
| C1104 | 4030011600 | S.CER C1608 JB 1E 104K-T | | T | 175.4/87.7 |
| C1106 | 4030011600 | S.CER C1608 JB 1E 104K-T | | T | 179.3/128.8 |
| C1107 | 4030011600 | S.CER C1608 JB 1E 104K-T | | B | 172.3/124.2 |
| C1109 | 4030007090 | S.CER C1608 CH 1H 470J-T | | T | 175.7/137.9 |
| C1110 | 4030006900 | S.CER C1608 JB 1H 103K-T | | T | 175.7/136.6 |
| C1111 | 4030011600 | S.CER C1608 JB 1E 104K-T | | T | 176.7/132 |
| C1112 | 4030006900 | S.CER C1608 JB 1H 103K-T | | T | 179.3/132 |
| C1113 | 4030007090 | S.CER C1608 CH 1H 470J-T | | T | 178.6/140.9 |
| C1114 | 4030006900 | S.CER C1608 JB 1H 103K-T | | B | 178.4/138 |
| C1115 | 4030011600 | S.CER C1608 JB 1E 104K-T | | T | 175.7/140 |
| C1116 | 4030006900 | S.CER C1608 JB 1H 103K-T | | T | 165.7/138.7 |

## [RXPLL-B UNIT]

| REF NO. | PARTS NO. | DESCRIPTION | | M. | H/V LOCATION |
|---|---|---|---|---|---|
| C1117 | 4030007010 | S.CER C1608 CH 1H 100D-T | | T | 169.7/142.2 |
| C1118 | 4030011600 | S.CER C1608 JB 1E 104K-T | | T | 171/142.2 |
| C1119 | 4030006880 | S.CER C1608 JB 1H 472K-T | | T | 171.9/146.6 |
| C1120 | 4030006880 | S.CER C1608 JB 1H 472K-T | | T | 171.9/148.4 |
| C1121 | 4030011600 | S.CER C1608 JB 1E 104K-T | | T | 180.6/147.7 |
| C1122 | 4030009530 | S.CER C1608 CH 1H 030B-T | | T | 178.2/120.3 |
| C1123 | 4030006900 | S.CER C1608 JB 1H 103K-T | | T | 182.1/100.9 |
| C1124 | 4030006900 | S.CER C1608 JB 1H 103K-T | | T | 175.3/105.9 |
| C1125 | 4030006900 | S.CER C1608 JB 1H 103K-T | | T | 175.5/85.1 |
| C1126 | 4030011600 | S.CER C1608 JB 1E 104K-T | | T | 173.4/131.1 |
| C1151 | 4030007110 | S.CER C1608 CH 1H 680J-T | | B | 123.1/64 |
| C1152 | 4030007110 | S.CER C1608 CH 1H 680J-T | | B | 123.1/57 |
| C1153 | 4030017810 | S.CER C1608 CH 1H 102J-T | | T | 131.5/63.9 |
| C1201 | 4030007110 | S.CER C1608 CH 1H 680J-T | | B | 120.2/21.8 |
| C1202 | 4030007110 | S.CER C1608 CH 1H 680J-T | | B | 118.4/21.8 |
| C1207 | 4030006880 | S.CER C1608 JB 1H 472K-T | | B | 123/11.8 |
| C1226 | 4030009500 | S.CER C1608 CH 1H 0R5B-T | | B | 124.9/35.6 |
| C1227 | 4030009500 | S.CER C1608 CH 1H 0R5B-T | | B | 115.4/35.6 |
| C1228 | 4030009920 | S.CER C1608 CH 1H 050B-T | | B | 113.9/41.8 |
| C1231 | 4030006900 | S.CER C1608 JB 1H 103K-T | | T | 118.9/21.5 |
| C1232 | 4030006900 | S.CER C1608 JB 1H 103K-T | | T | 109/21.5 |
| C1234 | 4030006900 | S.CER C1608 JB 1H 103K-T | | B | 123.5/38.3 |
| C1235 | 4030006880 | S.CER C1608 JB 1H 472K-T | | B | 116.6/32.1 |
| C1236 | 4030006900 | S.CER C1608 JB 1H 103K-T | | T | 119.8/40 |
| C1238 | 4030006900 | S.CER C1608 JB 1H 103K-T | | B | 114/38.3 |
| C1239 | 4030006880 | S.CER C1608 JB 1H 472K-T | | B | 106.8/32.3 |
| C1240 | 4030006900 | S.CER C1608 JB 1H 103K-T | | T | 111.7/40.5 |
| C1241 | 4030006900 | S.CER C1608 JB 1H 103K-T | | T | 113.6/38.6 |
| C1243 | 4030006880 | S.CER C1608 JB 1H 472K-T | | B | 129.6/46.7 |
| C1244 | 4030007080 | S.CER C1608 CH 1H 390J-T | | T | 149.6/67 |
| C1245 | 4030007130 | S.CER C1608 CH 1H 101J-T | | T | 151/64.4 |
| C1246 | 4030007120 | S.CER C1608 CH 1H 820J-T | | T | 150.9/67 |
| C1247 | 4030007090 | S.CER C1608 CH 1H 470J-T | | T | 153.4/63.5 |
| C1248 | 4030007130 | S.CER C1608 CH 1H 101J-T | | T | 153.4/66.8 |
| C1249 | 4030007020 | S.CER C1608 CH 1H 120J-T | | T | 153.1/70.3 |
| C1250 | 4030007100 | S.CER C1608 CH 1H 560J-T | | B | 152.4/74.3 |
| C1251 | 4030006900 | S.CER C1608 JB 1H 103K-T | | T | 160.2/92.9 |
| C1252 | 4030006900 | S.CER C1608 JB 1H 103K-T | | T | 152.7/92.9 |
| C1253 | 4030006900 | S.CER C1608 JB 1H 103K-T | | B | 152.5/111.2 |
| C1255 | 4030017810 | S.CER C1608 CH 1H 102J-T | | B | 155.7/99.3 |
| C1256 | 4030007010 | S.CER C1608 CH 1H 100D-T | | T | 156.3/98.8 |
| C1257 | 4030011600 | S.CER C1608 JB 1E 104K-T | | B | 155.7/103 |
| C1258 | 4030007080 | S.CER C1608 CH 1H 390J-T | | B | 152/97.5 |
| C1264 | 4030007110 | S.CER C1608 CH 1H 680J-T | | T | 122/51.1 |
| C1265 | 4610001830 | S.TRI TZB4S100AB10R00 (TZBX4N100BA110) | | T | 163.8/70.8 |
| C1266 | 4030007020 | S.CER C1608 CH 1H 120J-T | | T | 160.1/74.5 |
| C1267 | 4030006880 | S.CER C1608 JB 1H 472K-T | | B | 157/126.4 |
| C1268 | 4030006980 | S.CER C1608 CH 1H 070D-T | | T | 149.6/64.4 |
| C1302 | 4030007060 | S.CER C1608 CH 1H 270J-T | | T | 159.3/111 |
| C1303 | 4030006980 | S.CER C1608 CH 1H 070D-T | | T | 159.3/112.9 |
| C1304 | 4030007070 | S.CER C1608 CH 1H 330J-T | | T | 159.3/114.2 |
| C1305 | 4030007010 | S.CER C1608 CH 1H 100D-T | | T | 153.5/114.6 |
| C1306 | 4030009650 | S.CER C1608 CH 1H 240J-T | | T | 159.3/115.5 |
| C1307 | 4030007030 | S.CER C1608 CH 1H 150J-T | | T | 153.5/120.2 |
| C1308 | 4030006900 | S.CER C1608 JB 1H 103K-T | | T | 155.1/127.1 |
| C1309 | 4030007080 | S.CER C1608 CH 1H 390J-T | | T | 156.5/125.8 |
| C1310 | 4030007080 | S.CER C1608 CH 1H 390J-T | | T | 159.1/128.4 |
| C1311 | 4030006900 | S.CER C1608 JB 1H 103K-T | | B | 149/118.9 |
| C1312 | 4030007060 | S.CER C1608 CH 1H 270J-T | | T | 155.5/111.7 |
| C1313 | 4030007060 | S.CER C1608 CH 1H 270J-T | | T | 159.1/127.1 |
| C1355 | 4030006880 | S.CER C1608 JB 1H 472K-T | | T | 144.7/70 |
| C1357 | 4030007000 | S.CER C1608 CH 1H 090D-T | | B | 144.6/67.1 |
| C1358 | 4030011600 | S.CER C1608 JB 1E 104K-T | | B | 139.1/70.4 |
| C1360 | 4030011600 | S.CER C1608 JB 1E 104K-T | | B | 146.4/70.4 |
| C1361 | 4030007020 | S.CER C1608 CH 1H 120J-T | | B | 137.7/69.5 |
| C1362 | 4030011600 | S.CER C1608 JB 1E 104K-T | | T | 137.5/65.6 |
| C1403 | 4030017810 | S.CER C1608 CH 1H 102J-T | | T | 114.7/70.3 |
| C1404 | 4030017810 | S.CER C1608 CH 1H 102J-T | | T | 116.3/104.8 |
| C1405 | 4030006900 | S.CER C1608 JB 1H 103K-T | | B | 115.9/63.9 |
| C1406 | 4030017810 | S.CER C1608 CH 1H 102J-T | | T | 114.2/66.2 |
| C1407 | 4030017810 | S.CER C1608 CH 1H 102J-T | | T | 119.9/70.3 |
| C1408 | 4030006900 | S.CER C1608 JB 1H 103K-T | | T | 116.3/73 |
| C1409 | 4030006900 | S.CER C1608 JB 1H 103K-T | | T | 114.4/68.1 |
| C1410 | 4030007030 | S.CER C1608 CH 1H 150J-T | | T | 116.3/83.3 |
| C1411 | 4030006990 | S.CER C1608 CH 1H 080D-T | | T | 112.2/87.8 |
| C1412 | 4030007030 | S.CER C1608 CH 1H 150J-T | | T | 116.3/93.7 |
| C1413 | 4030007020 | S.CER C1608 CH 1H 120J-T | | T | 107/83.3 |
| C1414 | 4030006990 | S.CER C1608 CH 1H 080D-T | | T | 103.6/86.6 |
| C1415 | 4030007020 | S.CER C1608 CH 1H 120J-T | | T | 107/93.7 |
| C1416 | 4030006900 | S.CER C1608 JB 1H 103K-T | | T | 113.2/103.4 |
| C1417 | 4030006900 | S.CER C1608 JB 1H 103K-T | | T | 110.5/107.6 |
| C1418 | 4030017810 | S.CER C1608 CH 1H 102J-T | | T | 110.4/105.8 |
| C1419 | 4030017810 | S.CER C1608 CH 1H 102J-T | | T | 111/108.9 |
| C1420 | 4030007120 | S.CER C1608 CH 1H 820J-T | | B | 113.2/114.2 |
| C1421 | 4030007150 | S.CER C1608 CH 1H 151J-T | | B | 115/114.2 |
| C1423 | 4030010750 | S.CER C1608 CH 1H 201J-T | | B | 120.3/111.1 |
| C1424 | 4030007010 | S.CER C1608 CH 1H 100D-T | | T | 132.8/103.3 |
| C1425 | 4030011600 | S.CER C1608 JB 1E 104K-T | | T | 136.5/106.2 |
| C1426 | 4030011600 | S.CER C1608 JB 1E 104K-T | | T | 137.8/106.2 |
| C1427 | 4030006900 | S.CER C1608 JB 1H 103K-T | | T | 133.9/106.2 |
| C1428 | 4030006980 | S.CER C1608 CH 1H 070D-T | | T | 119.5/109 |
| C1429 | 4030006900 | S.CER C1608 JB 1H 103K-T | | T | 120.5/113.6 |
| C1430 | 4030007040 | S.CER C1608 CH 1H 180J-T | | B | 131.9/115.3 |
| C1431 | 4030017810 | S.CER C1608 CH 1H 102J-T | | T | 127/116.2 |
| C1432 | 4030009980 | S.CER C1608 JB 1H 152K-T | | T | 129.1/114.1 |
| C1433 | 4030011600 | S.CER C1608 JB 1E 104K-T | | T | 130.4/114.1 |
| C1434 | 4030009920 | S.CER C1608 CH 1H 050B-T | | B | 124.7/134.4 |
| C1435 | 4030009920 | S.CER C1608 CH 1H 050B-T | | B | 124.7/131.6 |
| C1436 | 4030011600 | S.CER C1608 JB 1E 104K-T | | B | 137.2/122.2 |
| C1437 | 4030009920 | S.CER C1608 CH 1H 050B-T | | T | 104/83.3 |
| C1438 | 4030009920 | S.CER C1608 CH 1H 050B-T | | T | 102.3/86.6 |
| C1439 | 4030009920 | S.CER C1608 CH 1H 050B-T | | T | 110/93.7 |
| C1441 | 4030006880 | S.CER C1608 JB 1H 472K-T | | T | 120.5/116.2 |
| C1451 | 4030007020 | S.CER C1608 CH 1H 120J-T | | T | 125.5/80.1 |

M.=Mounted side (T: Mounted on the Top side, B: Mounted on the Bottom side)
S.=Surface mount

## [RXPLL-B UNIT]

| REF NO. | PARTS NO. | DESCRIPTION | M. | H/V LOCATION |
|---|---|---|---|---|
| C1453 | 4030007030 | S.CER C1608 CH 1H 150J-T | T | 122.1/85.1 |
| C1454 | 4030007030 | S.CER C1608 CH 1H 150J-T | T | 120.8/85.1 |
| C1456 | 4030007020 | S.CER C1608 CH 1H 120J-T | T | 125.5/90.9 |
| C1457 | 4030006900 | S.CER C1608 JB 1H 103K-T | T | 118.3/72.9 |
| C1458 | 4030006900 | S.CER C1608 JB 1H 103K-T | T | 116.6/103.5 |
| C1501 | 4030018530 | S.CER C3216 CH 1H 103J-T | T | 131.2/124.5 |
| C1502 | 4550003220 | S.TAN TEESVA 1E 105M8R | T | 132.1/139.2 |
| C1503 | 4030006900 | S.CER C1608 JB 1H 103K-T | T | 137/142.1 |
| C1504 | 4030012610 | S.CER C2012 JB 1C 474K-T | T | 136.7/140.5 |
| C1505 | 4030007010 | S.CER C1608 CH 1H 100D-T | T | 130/143.5 |
| C1506 | 4030010760 | S.CER C1608 CH 1H 331J-T | T | 131.3/146.3 |
| C1507 | 4510008540 | S.ELE EEE1CA100SR | T | 142.6/140.8 |
| C1508 | 4030011600 | S.CER C1608 JB 1E 104K-T | B | 128.8/148.8 |
| C1509 | 4030018800 | S.CER C3216 CH 1H 223J-T | T | 135.8/145.1 |
| C1510 | 4030007110 | S.CER C1608 CH 1H 680J-T | T | 136.5/158.9 |
| C1511 | 4510008540 | S.ELE EEE1CA100SR | T | 132.7/150.6 |
| C1512 | 4030011600 | S.CER C1608 JB 1E 104K-T | T | 129.6/149 |
| C1513 | 4030011600 | S.CER C1608 JB 1E 104K-T | T | 129.6/158.1 |
| C1514 | 4510008540 | S.ELE EEE1CA100SR | T | 132.7/156.5 |
| C1515 | 4030007160 | S.CER C1608 CH 1H 181J-T | T | 132.2/160.8 |
| C1516 | 4030009350 | S.CER C1608 CH 1H 3R5B-T | T | 130.9/160.8 |
| C1517 | 4030007110 | S.CER C1608 CH 1H 680J-T | T | 115.3/155 |
| C1518 | 4030018530 | S.CER C3216 CH 1H 103J-T | T | 131.2/132.8 |
| C1519 | 4550003220 | S.TAN TEESVA 1E 105M8R | T | 122.9/140.9 |
| C1520 | 4030006900 | S.CER C1608 JB 1H 103K-T | T | 119.8/140.7 |
| C1521 | 4030012610 | S.CER C2012 JB 1C 474K-T | T | 116.2/142.1 |
| C1522 | 4030007010 | S.CER C1608 CH 1H 100D-T | T | 123.7/143.5 |
| C1523 | 4030010760 | S.CER C1608 CH 1H 331J-T | T | 122.4/146.3 |
| C1524 | 4030018800 | S.CER C3216 CH 1H 223J-T | T | 117.9/145.2 |
| C1525 | 4510008540 | S.ELE EEE1CA100SR | T | 124.9/150.6 |
| C1526 | 4030011600 | S.CER C1608 JB 1E 104K-T | T | 128/149 |
| C1527 | 4030011600 | S.CER C1608 JB 1E 104K-T | T | 128/158.1 |
| C1528 | 4510008540 | S.ELE EEE1CA100SR | T | 124.9/156.5 |
| C1529 | 4030017870 | S.CER C1608 CH 1H 681J-T | T | 125.4/160.8 |
| C1530 | 4030011330 | S.CER C1608 CH 1H 391J-T | T | 126.7/160.8 |
| C1531 | 4510008500 | S.ELE EEE1CA101WP | T | 111.3/167.3 |
| C1532 | 4030011600 | S.CER C1608 JB 1E 104K-T | T | 107.1/167.3 |
| C1533 | 4030011600 | S.CER C1608 JB 1E 104K-T | T | 115.5/167.3 |
| C1534 | 4510008500 | S.ELE EEE1CA101WP | T | 119.7/167.3 |
| C1535 | 4030011600 | S.CER C1608 JB 1E 104K-T | T | 133.7/172.6 |
| C1536 | 4030017870 | S.CER C1608 CH 1H 681J-T | T | 126.2/179.5 |
| C1537 | 4510008500 | S.ELE EEE1CA101WP | T | 111.3/176 |
| C1538 | 4030011600 | S.CER C1608 JB 1E 104K-T | T | 107.1/176 |
| C1539 | 4030011600 | S.CER C1608 JB 1E 104K-T | T | 115.5/176 |
| C1540 | 4510008500 | S.ELE EEE1CA101WP | T | 119.7/176 |
| C1541 | 4030007050 | S.CER C1608 CH 1H 220J-T | T | 124/175 |
| C1651 | 4030006880 | S.CER C1608 JB 1H 472K-T | B | 105.5/144 |
| C1653 | 4030006880 | S.CER C1608 JB 1H 472K-T | B | 109/137.2 |
| C1654 | 4030017810 | S.CER C1608 CH 1H 102J-T | B | 106.9/137.2 |
| C1655 | 4030009530 | S.CER C1608 CH 1H 030B-T | T | 107.6/136.8 |
| C1656 | 4610001970 | S.TRI TZC3P200A110R00 (TZC03P200A1102) | T | 110.9/136.2 |
| C1657 | 4030010220 | S.CER C2012 CH 1H 102J-T | T | 116.4/122.7 |
| C1658 | 4030010220 | S.CER C2012 CH 1H 102J-T | T | 116.4/130.9 |
| C1659 | 4030011600 | S.CER C1608 JB 1E 104K-T | T | 107.8/120 |
| C1660 | 4030011600 | S.CER C1608 JB 1E 104K-T | B | 134/174 |
| C1661 | 4030011600 | S.CER C1608 JB 1E 104K-T | B | 145.2/171.3 |
| C1662 | 4030011600 | S.CER C1608 JB 1E 104K-T | T | 144.3/178 |
| C1663 | 4030011600 | S.CER C1608 JB 1E 104K-T | T | 135.1/170.2 |
| C1665 | 4030006900 | S.CER C1608 JB 1H 103K-T | T | 138.9/164.1 |
| C1666 | 4030006880 | S.CER C1608 JB 1H 472K-T | B | 113.3/144 |
| C1701 | 4030011600 | S.CER C1608 JB 1E 104K-T | T | 153.4/163 |
| C1702 | 4030011600 | S.CER C1608 JB 1E 104K-T | T | 144.4/163 |
| C1703 | 4510004601 | ELE 16 ME 1000 HC | | |
| C1704 | 4030011600 | S.CER C1608 JB 1E 104K-T | B | 180.1/160.2 |
| C1705 | 4030011600 | S.CER C1608 JB 1E 104K-T | B | 186.4/160.2 |
| C1706 | 4510008520 | S.ELE EEE1CA470SP | T | 172.7/154.8 |
| C1707 | 4030011600 | S.CER C1608 JB 1E 104K-T | T | 149.7/154.8 |
| C1708 | 4030006880 | S.CER C1608 JB 1H 472K-T | T | 175.7/166.8 |
| C1709 | 4030006880 | S.CER C1608 JB 1H 472K-T | T | 172.6/166.8 |
| C1710 | 4030006880 | S.CER C1608 JB 1H 472K-T | T | 169.6/166.8 |
| C1711 | 4030011340 | S.CER C1608 CH 1H 471J-T | T | 171.4/163.5 |
| C1712 | 4030011340 | S.CER C1608 CH 1H 471J-T | T | 167.5/163.5 |
| C1713 | 4030006880 | S.CER C1608 JB 1H 472K-T | B | 165.5/168.8 |
| C1714 | 4030006880 | S.CER C1608 JB 1H 472K-T | B | 153.8/141.8 |
| C1716 | 4030006880 | S.CER C1608 JB 1H 472K-T | B | 154.7/145.1 |
| C1717 | 4030006880 | S.CER C1608 JB 1H 472K-T | B | 152.9/145.1 |
| C1719 | 4030006880 | S.CER C1608 JB 1H 472K-T | B | 151.1/145.1 |
| C1720 | 4030006880 | S.CER C1608 JB 1H 472K-T | B | 155.6/141.8 |
| C1721 | 4030006880 | S.CER C1608 JB 1H 472K-T | B | 157.4/141.8 |
| RL1001 | 6330001750 | REL FTR-B4CA012Z | | |
| RL1002 | 6330001750 | REL FTR-B4CA012Z | | |
| RL1003 | 6330001750 | REL FTR-B4CA012Z | | |
| RL1004 | 6330001750 | REL FTR-B4CA012Z | | |
| RL1005 | 6330001750 | REL FTR-B4CA012Z | | |
| RL1006 | 6330001750 | REL FTR-B4CA012Z | | |
| RL1203 | 6330001750 | REL FTR-B4CA012Z | | |
| RL1206 | 6330001750 | REL FTR-B4CA012Z | | |
| J2 | 6510019991 | S.CON 52808-2271(2291) | T | 25/9 |
| J10 | 6510007020 | CON TMP-J01X-V6 | | |
| J351 | 6510007020 | CON TMP-J01X-V6 | | |
| J561 | 6510007020 | CON TMP-J01X-V6 | | |
| J601 | 6510007020 | CON TMP-J01X-V6 | | |
| J681 | 6510007020 | CON TMP-J01X-V6 | | |
| J831 | 6510007020 | CON TMP-J01X-V6 | | |
| J1002 | 6510007020 | CON TMP-J01X-V6 | | |
| J1101 | 6510007020 | CON TMP-J01X-V6 | | |
| J1201 | 6510007020 | CON TMP-J01X-V6 | | |
| J1301 | 6510007020 | CON TMP-J01X-V6 | | |
| J1501 | 6510018961 | S.CON B2B-PH-SM4-TB(LF)(SN) | T | 149.6/177.5 |
| J1701 | 6510019981 | S.CON 52808-1671(1690) | T | 168/177.2 |

## [RXPLL-B UNIT]

| REF NO. | PARTS NO. | DESCRIPTION | M. | H/V LOCATION |
|---|---|---|---|---|
| W1052 | 9016201006 | WIR 73/98/025/X98/X98 | | |
| W1401 | 9029495075 | JUM 73/98/020/X98/X98 | | |
| W1411 | 7120000480 | S.JUM MJP-0.4-T | T | 125.1/111.6 |
| EP20 | 6910012350 | S.BEA MMZ1608Y 102BT | T | 85.4/126 |
| EP21 | 6910012350 | S.BEA MMZ1608Y 102BT | T | 88.7/124 |
| EP22 | 6910012350 | S.BEA MMZ1608Y 102BT | T | 90/124 |
| EP101 | 6910012350 | S.BEA MMZ1608Y 102BT | B | 47.6/98.6 |
| EP102 | 6910012350 | S.BEA MMZ1608Y 102BT | B | 47.6/96.8 |
| EP103 | 6910012350 | S.BEA MMZ1608Y 102BT | T | 46/96.8 |
| EP104 | 6910012350 | S.BEA MMZ1608Y 102BT | T | 46/92.9 |
| EP105 | 6910012350 | S.BEA MMZ1608Y 102BT | T | 46/91.6 |
| EP106 | 6910012350 | S.BEA MMZ1608Y 102BT | T | 46/89 |
| EP107 | 6910012350 | S.BEA MMZ1608Y 102BT | B | 47.6/100.4 |
| EP1701 | 6910012350 | S.BEA MMZ1608Y 102BT | T | 170.1/163.5 |
| EP1702 | 6910012350 | S.BEA MMZ1608Y 102BT | T | 168.8/163.5 |
| EP1801 | 6910012350 | S.BEA MMZ1608Y 102BT | B | 153/132.7 |
| EP1802 | 6910012350 | S.BEA MMZ1608Y 102BT | B | 142.5/18.8 |
| EP1804 | 6910012350 | S.BEA MMZ1608Y 102BT | B | 112.5/138.7 |
| EP1805 | 6910012350 | S.BEA MMZ1608Y 102BT | B | 150.2/141.8 |
| EP1806 | 6910012350 | S.BEA MMZ1608Y 102BT | B | 128.6/64.3 |
| EP1807 | 6910012350 | S.BEA MMZ1608Y 102BT | B | 117.4/50.2 |
| EP1808 | 6910012350 | S.BEA MMZ1608Y 102BT | B | 137/166.9 |
| EP1809 | 6910012350 | S.BEA MMZ1608Y 102BT | B | 147.4/127.4 |
| EP1810 | 6910012350 | S.BEA MMZ1608Y 102BT | B | 131.3/64.2 |
| EP1811 | 6910012350 | S.BEA MMZ1608Y 102BT | T | 160.7/56.3 |
| EP1812 | 6910012350 | S.BEA MMZ1608Y 102BT | B | 153.5/137.4 |
| EP1813 | 6910012350 | S.BEA MMZ1608Y 102BT | B | 132.6/65.7 |
| EP1814 | 6910012350 | S.BEA MMZ1608Y 102BT | B | 147.2/22.3 |
| EP1815 | 6910012350 | S.BEA MMZ1608Y 102BT | B | 156/62.6 |
| EP1816 | 6910012350 | S.BEA MMZ1608Y 102BT | B | 160.4/20.9 |
| EP1817 | 6910012350 | S.BEA MMZ1608Y 102BT | B | 168.6/62.2 |
| EP1818 | 6910012350 | S.BEA MMZ1608Y 102BT | B | 151.2/133.2 |
| EP1819 | 6910012350 | S.BEA MMZ1608Y 102BT | B | 145.6/127.9 |
| EP1820 | 6910012350 | S.BEA MMZ1608Y 102BT | B | 148.6/19.8 |
| EP1821 | 6910012350 | S.BEA MMZ1608Y 102BT | B | 148.6/14.1 |
| EP1825 | 6910012350 | S.BEA MMZ1608Y 102BT | B | 126.6/7 |
| EP1826 | 6910012350 | S.BEA MMZ1608Y 102BT | B | 151.5/137.7 |
| EP1830 | 6910012350 | S.BEA MMZ1608Y 102BT | B | 141.3/135.2 |
| EP1831 | 6910012350 | S.BEA MMZ1608Y 102BT | B | 143.4/128.5 |
| EP1832 | 6910012350 | S.BEA MMZ1608Y 102BT | B | 149.2/137.5 |
| EP1833 | 6910012350 | S.BEA MMZ1608Y 102BT | B | 147.2/133.5 |
| EP1834 | 6910012350 | S.BEA MMZ1608Y 102BT | T | 115.8/108.3 |
| EP1835 | 6910012350 | S.BEA MMZ1608Y 102BT | B | 141.6/128.5 |
| EP1836 | 6910012350 | S.BEA MMZ1608Y 102BT | T | 111/110.2 |
| EP1837 | 6910012350 | S.BEA MMZ1608Y 102BT | B | 145.8/134.1 |
| EP1838 | 6910012350 | S.BEA MMZ1608Y 102BT | T | 116.3/106.1 |

M.=Mounted side (T: Mounted on the Top side, B: Mounted on the Bottom side)
S.=Surface mount

## [BPF UNIT]

| REF NO. | PARTS NO. | DESCRIPTION | | M. | H/V LOCATION |
|---|---|---|---|---|---|
| IC101 | 1130011510 | S.IC | BU2099FV-E2 | T | 9.5/77.6 |
| IC102 | 1130011510 | S.IC | BU2099FV-E2 | T | 9.7/100.9 |
| IC401 | 1130011510 | S.IC | BU2099FV-E2 | T | 10.3/39.3 |
| IC402 | 1130011510 | S.IC | BU2099FV-E2 | T | 9.6/59.4 |
| Q355 | 1590001330 | S.TR | DTA114EUA T106 | T | 191.6/68.1 |
| Q381 | 1590000680 | S.TR | DTC114EUA T106 | T | 232/60.3 |
| Q383 | 1590000680 | S.TR | DTC114EUA T106 | T | 229.2/51.9 |
| Q384 | 1590000680 | S.TR | DTC114EUA T106 | T | 226.2/51.9 |
| Q385 | 1590000680 | S.TR | DTC114EUA T106 | T | 233.1/54.7 |
| Q386 | 1590000430 | S.TR | DTC144EUA T106 | T | 230.1/54.7 |
| Q387 | 1590000680 | S.TR | DTC114EUA T106 | T | 228.8/60.2 |
| Q401 | 1530002841 | S.TR | 2SC4116-Y (TE85R,F) | T | 234.5/108.2 |
| Q402 | 1530002060 | S.TR | 2SC4081 T106 R | B | 224.2/99.2 |
| Q403 | 1590001330 | S.TR | DTA114EUA T106 | B | 227.6/100.2 |
| Q404 | 1590000430 | S.TR | DTC144EUA T106 | T | 232/108.2 |
| Q855 | 1590001330 | S.TR | DTA114EUA T106 | T | 192/53 |
| Q871 | 1590001330 | S.TR | DTA114EUA T106 | B | 234.6/18.8 |
| Q872 | 1530002060 | S.TR | 2SC4081 T106 R | B | 231.2/19.5 |
| Q873 | 1530002841 | S.TR | 2SC4116-Y (TE85R,F) | B | 231.2/16.6 |
| Q874 | 1590000430 | S.TR | DTC144EUA T106 | T | 195.7/57.4 |
| Q900 | 1590001330 | S.TR | DTA114EUA T106 | B | 217.4/116.1 |
| Q901 | 1530003851 | S.TR | 2SC5551A-F-E | T | 210.3/113.5 |
| Q902 | 1590001330 | S.TR | DTA114EUA T106 | T | 200.6/115.1 |
| Q903 | 1530003851 | S.TR | 2SC5551A-F-E | T | 189.4/113.5 |
| Q950 | 1590001330 | S.TR | DTA114EUA T106 | B | 215/3.2 |
| Q951 | 1530003851 | S.TR | 2SC5551A-F-E | T | 209.8/17.6 |
| Q952 | 1590001330 | S.TR | DTA114EUA T106 | B | 199.1/4 |
| Q953 | 1530003851 | S.TR | 2SC5551A-F-E | T | 188.6/17.6 |
| D1 | 1790001250 | S.DIO | MA2S1110G-(TX) | T | 184/75.2 |
| D21 | 1790001250 | S.DIO | MA2S1110G-(TX) | B | 167.1/77.7 |
| D51 | 1790001250 | S.DIO | MA2S1110G-(TX) | T | 163.7/68.6 |
| D81 | 1790001250 | S.DIO | MA2S1110G-(TX) | B | 141.5/68.1 |
| D111 | 1790001250 | S.DIO | MA2S1110G-(TX) | T | 107.4/67.6 |
| D141 | 1790001250 | S.DIO | MA2S1110G-(TX) | T | 94.7/70.3 |
| D171 | 1790001250 | S.DIO | MA2S1110G-(TX) | B | 81.6/74.3 |
| D201 | 1790001250 | S.DIO | MA2S1110G-(TX) | B | 70.2/73.1 |
| D231 | 1790001250 | S.DIO | MA2S1110G-(TX) | T | 49.4/69.1 |
| D261 | 1790001250 | S.DIO | MA2S1110G-(TX) | B | 35.4/70.1 |
| D291 | 1790001250 | S.DIO | MA2S1110G-(TX) | B | 203.9/71.9 |
| D321 | 1790001250 | S.DIO | MA2S1110G-(TX) | T | 204/97.5 |
| D351 | 1790001250 | S.DIO | MA2S1110G-(TX) | T | 189/94.9 |
| D352 | 1790001250 | S.DIO | MA2S1110G-(TX) | T | 189/88.7 |
| D353 | 1790001250 | S.DIO | MA2S1110G-(TX) | T | 189/82.5 |
| D354 | 1790001250 | S.DIO | MA2S1110G-(TX) | T | 189/76.3 |
| D355 | 1790001250 | S.DIO | MA2S1110G-(TX) | T | 193.9/66.2 |
| D371 | 1790001250 | S.DIO | MA2S1110G-(TX) | T | 218.5/69.9 |
| D373 | 1790001250 | S.DIO | MA2S1110G-(TX) | B | 239.8/116.1 |
| D391 | 1750000581 | S.DIO | 1SV307 (TPH3,F) | B | 233.2/49.9 |
| D392 | 1750000581 | S.DIO | 1SV307 (TPH3,F) | B | 236/52.9 |
| D393 | 1750000581 | S.DIO | 1SV307 (TPH3,F) | B | 235.3/63.7 |
| D401 | 1790001250 | S.DIO | MA2S1110G-(TX) | B | 225.6/95.5 |
| D402 | 1790000980 | S.DIO | MA3J7420GL (TX) | B | 233.9/113.2 |
| D501 | 1790001250 | S.DIO | MA2S1110G-(TX) | B | 184.1/45.6 |
| D531 | 1790001250 | S.DIO | MA2S1110G-(TX) | B | 167.7/53.7 |
| D561 | 1790001250 | S.DIO | MA2S1110G-(TX) | B | 164.4/42.5 |
| D591 | 1790001250 | S.DIO | MA2S1110G-(TX) | B | 144.1/53.4 |
| D621 | 1790001250 | S.DIO | MA2S1110G-(TX) | T | 107.6/52.6 |
| D651 | 1790001250 | S.DIO | MA2S1110G-(TX) | T | 94.9/49.6 |
| D681 | 1790001250 | S.DIO | MA2S1110G-(TX) | B | 81.5/45.7 |
| D711 | 1790001250 | S.DIO | MA2S1110G-(TX) | B | 70/44.3 |
| D741 | 1790001250 | S.DIO | MA2S1110G-(TX) | B | 51.4/50.5 |
| D771 | 1790001250 | S.DIO | MA2S1110G-(TX) | B | 36.5/43.7 |
| D801 | 1790001250 | S.DIO | MA2S1110G-(TX) | B | 203.8/47.4 |
| D831 | 1790001250 | S.DIO | MA2S1110G-(TX) | T | 203.7/22.1 |
| D851 | 1790001250 | S.DIO | MA2S1110G-(TX) | T | 189/27.9 |
| D852 | 1790001250 | S.DIO | MA2S1110G-(TX) | T | 189/33.1 |
| D853 | 1790001250 | S.DIO | MA2S1110G-(TX) | T | 189/39.3 |
| D854 | 1790001250 | S.DIO | MA2S1110G-(TX) | T | 189/45.5 |
| D855 | 1790001250 | S.DIO | MA2S1110G-(TX) | T | 194/52.8 |
| D871 | 1790001250 | S.DIO | MA2S1110G-(TX) | B | 241.4/18 |
| D872 | 1790000980 | S.DIO | MA3J7420GL (TX) | B | 247.7/15.6 |
| D873 | 1790001250 | S.DIO | MA2S1110G-(TX) | B | 243/94.1 |
| D900 | 1790001250 | S.DIO | MA2S1110G-(TX) | B | 218.9/100.4 |
| D901 | 1790001250 | S.DIO | MA2S1110G-(TX) | T | 207.9/100.7 |
| D902 | 1790001250 | S.DIO | MA2S1110G-(TX) | B | 197/100.2 |
| D903 | 1790001250 | S.DIO | MA2S1110G-(TX) | B | 186.4/100.5 |
| D950 | 1790001250 | S.DIO | MA2S1110G-(TX) | B | 212.3/3.9 |
| D951 | 1790001250 | S.DIO | MA2S1110G-(TX) | T | 204.4/4.5 |
| D952 | 1790001250 | S.DIO | MA2S1110G-(TX) | B | 195.7/4.9 |
| D953 | 1790001250 | S.DIO | MA2S1110G-(TX) | B | 182.6/5.3 |
| D954 | 1790001250 | S.DIO | MA2S1110G-(TX) | T | 235.4/16.2 |
| L1 | 6200005521 | S.COL | NLV25T-470J | T | 186.7/100.6 |
| L2 | 6200005521 | S.COL | NLV25T-470J | B | 183.8/77.2 |
| L3 | 6200010830 | S.COL | C2520C-3R3G-A | T | 179.2/88.5 |
| L4 | 6200010830 | S.COL | C2520C-3R3G-A | T | 179.2/80.2 |
| L5 | 6200010830 | S.COL | C2520C-3R3G-A | T | 178.2/84.3 |
| L6 | 6200010830 | S.COL | C2520C-3R3G-A | T | 178/76.2 |
| L21 | 6200005521 | S.COL | NLV25T-470J | B | 166/107.5 |
| L22 | 6200005521 | S.COL | NLV25T-470J | B | 163/107.5 |
| L23 | 6140004040 | COL | LR-443 | | |
| L24 | 6140004050 | COL | LR-444 | | |
| L25 | 6140004050 | COL | LR-444 | | |
| L26 | 6140004050 | COL | LR-444 | | |
| L27 | 6140004040 | COL | LR-443 | | |
| L51 | 6200005521 | S.COL | NLV25T-470J | B | 154.3/111.3 |
| L52 | 6200005521 | S.COL | NLV25T-470J | B | 151.3/107.2 |
| L53 | 6140004060 | COL | LR-445 | | |
| L54 | 6140004080 | COL | LR-446 | | |
| L55 | 6140004080 | COL | LR-446 | | |

## [BPF UNIT]

| REF NO. | PARTS NO. | DESCRIPTION | | M. | H/V LOCATION |
|---|---|---|---|---|---|
| L56 | 6140004080 | COL | LR-446 | | |
| L57 | 6140004060 | COL | LR-445 | | |
| L81 | 6200005521 | S.COL | NLV25T-470J | B | 142.1/109.6 |
| L82 | 6200005521 | S.COL | NLV25T-470J | B | 139.1/107.3 |
| L83 | 6140004090 | COL | LR-447 | | |
| L84 | 6140004230 | COL | LR-458 | | |
| L85 | 6140004230 | COL | LR-458 | | |
| L86 | 6140004230 | COL | LR-458 | | |
| L87 | 6140004090 | COL | LR-447 | | |
| L111 | 6200005521 | S.COL | NLV25T-470J | B | 118.1/109.1 |
| L112 | 6200005521 | S.COL | NLV25T-470J | B | 114.5/109.1 |
| L113 | 6140004090 | COL | LR-447 | | |
| L114 | 6140004100 | COL | LR-448 | | |
| L115 | 6140004100 | COL | LR-448 | | |
| L116 | 6140004100 | COL | LR-448 | | |
| L117 | 6140004090 | COL | LR-447 | | |
| L141 | 6200005521 | S.COL | NLV25T-470J | B | 106.8/111.4 |
| L142 | 6200005521 | S.COL | NLV25T-470J | B | 100.3/107.6 |
| L143 | 6140004110 | COL | LR-449 | | |
| L144 | 6140004120 | COL | LR-450 | | |
| L145 | 6140004120 | COL | LR-450 | | |
| L146 | 6140004120 | COL | LR-450 | | |
| L147 | 6140004110 | COL | LR-449 | | |
| L171 | 6200005521 | S.COL | NLV25T-470J | B | 84.9/116.9 |
| L172 | 6200005521 | S.COL | NLV25T-470J | B | 81.8/115.4 |
| L173 | 6140004140 | COL | LR-451 | | |
| L174 | 6140004150 | COL | LR-452 | | |
| L175 | 6140004150 | COL | LR-452 | | |
| L176 | 6140004150 | COL | LR-452 | | |
| L177 | 6140004140 | COL | LR-451 | | |
| L201 | 6200007021 | S.COL | NLV25T-270J | B | 61.9/112 |
| L202 | 6200007021 | S.COL | NLV25T-270J | B | 59.4/109.7 |
| L203 | 6140004160 | COL | LR-453 | | |
| L204 | 6140004180 | COL | LR-454 | | |
| L205 | 6140004180 | COL | LR-454 | | |
| L206 | 6140004180 | COL | LR-454 | | |
| L207 | 6140004160 | COL | LR-453 | | |
| L231 | 6200005011 | S.COL | NLV25T-100J | B | 44.2/116.9 |
| L232 | 6200005011 | S.COL | NLV25T-100J | B | 44.1/114.3 |
| L233 | 6140004190 | COL | LR-455 | | |
| L234 | 6140004210 | COL | LR-456 | | |
| L235 | 6140004210 | COL | LR-456 | | |
| L236 | 6140004210 | COL | LR-456 | | |
| L237 | 6140004190 | COL | LR-455 | | |
| L261 | 6200009141 | S.COL | NLV25T-6R8J | B | 27.3/111.4 |
| L262 | 6200009141 | S.COL | NLV25T-6R8J | B | 24.8/109.7 |
| L263 | 6140004220 | COL | LR-457 | | |
| L264 | 6140004160 | COL | LR-453 | | |
| L265 | 6140004160 | COL | LR-453 | | |
| L266 | 6140004160 | COL | LR-453 | | |
| L267 | 6140004220 | COL | LR-457 | | |
| L291 | 6200003281 | S.COL | NLV25T-2R2J | B | 222.8/74.1 |
| L292 | 6200003281 | S.COL | NLV25T-2R2J | B | 214/75.1 |
| L293 | 6200008090 | S.COL | LQW2BHN68NJ03L | T | 214.7/79.6 |
| L294 | 6200003041 | S.COL | NLV32T-R68J | T | 213.5/82.7 |
| L295 | 6200008090 | S.COL | LQW2BHN68NJ03L | T | 210.1/79.6 |
| L296 | 6200010870 | S.COL | C2520C-R33G-A (0.33U) | T | 209.9/76.6 |
| L321 | 6200003281 | S.COL | NLV25T-2R2J | B | 209.5/93.5 |
| L322 | 6200003281 | S.COL | NLV25T-2R2J | B | 213.2/95.3 |
| L323 | 6200003011 | S.COL | NLV32T-R27J | T | 214.2/91 |
| L324 | 6200003001 | S.COL | NLV32T-R22J | T | 209.7/87.1 |
| L325 | 6200003011 | S.COL | NLV32T-R27J | T | 209.6/93.2 |
| L371 | 6140004390 | COL | LR-459 | | |
| L372 | 6140004390 | COL | LR-459 | | |
| L373 | 6140003530 | COL | LR-395 | | |
| L391 | 6200005491 | S.COL | NLV32T-331J | T | 230.2/48.4 |
| L392 | 6200005491 | S.COL | NLV32T-331J | T | 231.7/64 |
| L393 | 6200003211 | S.COL | NLV32T-820J | B | 231.7/42.7 |
| L394 | 6200005491 | S.COL | NLV32T-331J | B | 236.2/46.6 |
| L395 | 6200005491 | S.COL | NLV32T-331J | B | 225.5/48.3 |
| L501 | 6200005521 | S.COL | NLV25T-470J | B | 183.7/36.2 |
| L502 | 6200005521 | S.COL | NLV25T-470J | B | 184.6/41 |
| L504 | 6200010830 | S.COL | C2520C-3R3G-A | T | 178.7/33.1 |
| L505 | 6200010830 | S.COL | C2520C-3R3G-A | T | 177.8/41.5 |
| L506 | 6200010830 | S.COL | C2520C-3R3G-A | T | 178.9/37.6 |
| L507 | 6200010830 | S.COL | C2520C-3R3G-A | T | 179.1/45 |
| L531 | 6200005521 | S.COL | NLV25T-470J | B | 167.5/13 |
| L532 | 6200005521 | S.COL | NLV25T-470J | B | 170.5/13 |
| L533 | 6140004040 | COL | LR-443 | | |
| L534 | 6140004050 | COL | LR-444 | | |
| L535 | 6140004050 | COL | LR-444 | | |
| L536 | 6140004050 | COL | LR-444 | | |
| L537 | 6140004040 | COL | LR-443 | | |
| L561 | 6200005521 | S.COL | NLV25T-470J | B | 149.9/12.4 |
| L562 | 6200005521 | S.COL | NLV25T-470J | B | 153.8/16.5 |
| L563 | 6140004060 | COL | LR-445 | | |
| L564 | 6140004080 | COL | LR-446 | | |
| L565 | 6140004080 | COL | LR-446 | | |
| L566 | 6140004080 | COL | LR-446 | | |
| L567 | 6140004060 | COL | LR-445 | | |
| L591 | 6200005521 | S.COL | NLV25T-470J | B | 139.9/9.2 |
| L592 | 6200005521 | S.COL | NLV25T-470J | B | 142.7/9.2 |
| L593 | 6140004090 | COL | LR-447 | | |
| L594 | 6140004230 | COL | LR-458 | | |
| L595 | 6140004230 | COL | LR-458 | | |
| L596 | 6140004230 | COL | LR-458 | | |
| L597 | 6140004090 | COL | LR-447 | | |
| L621 | 6200005521 | S.COL | NLV25T-470J | B | 116.8/9.5 |
| L622 | 6200005521 | S.COL | NLV25T-470J | B | 122.4/6.3 |
| L623 | 6140004090 | COL | LR-447 | | |
| L624 | 6140004100 | COL | LR-448 | | |
| L625 | 6140004100 | COL | LR-448 | | |
| L626 | 6140004100 | COL | LR-448 | | |
| L627 | 6140004090 | COL | LR-447 | | |
| L651 | 6200005521 | S.COL | NLV25T-470J | B | 105.4/13 |

M.=Mounted side (T: Mounted on the Top side, B: Mounted on the Bottom side)
S.=Surface mount

## [BPF UNIT]

| REF NO. | PARTS NO. | DESCRIPTION | | M. | H/V LOCATION |
|---|---|---|---|---|---|
| L652 | 6200005521 | S.COL | NLV25T-470J | B | 108/9.5 |
| L653 | 6140004110 | COL | LR-449 | | |
| L654 | 6140004120 | COL | LR-450 | | |
| L655 | 6140004120 | COL | LR-450 | | |
| L656 | 6140004120 | COL | LR-450 | | |
| L657 | 6140004110 | COL | LR-449 | | |
| L681 | 6200005521 | S.COL | NLV25T-470J | B | 77.4/6.2 |
| L682 | 6200005521 | S.COL | NLV25T-470J | B | 80.4/3.8 |
| L683 | 6140004140 | COL | LR-451 | | |
| L684 | 6140004150 | COL | LR-452 | | |
| L685 | 6140004150 | COL | LR-452 | | |
| L686 | 6140004150 | COL | LR-452 | | |
| L687 | 6140004140 | COL | LR-451 | | |
| L711 | 6200007021 | S.COL | NLV25T-270J | B | 56.4/10.8 |
| L712 | 6200007021 | S.COL | NLV25T-270J | B | 61.1/8.8 |
| L713 | 6140004160 | COL | LR-453 | | |
| L714 | 6140004180 | COL | LR-454 | | |
| L715 | 6140004180 | COL | LR-454 | | |
| L716 | 6140004180 | COL | LR-454 | | |
| L717 | 6140004160 | COL | LR-453 | | |
| L741 | 6200005011 | S.COL | NLV25T-100J | B | 44.2/6.2 |
| L742 | 6200005011 | S.COL | NLV25T-100J | B | 46.2/3.4 |
| L743 | 6140004190 | COL | LR-455 | | |
| L744 | 6140004210 | COL | LR-456 | | |
| L745 | 6140004210 | COL | LR-456 | | |
| L746 | 6140004210 | COL | LR-456 | | |
| L747 | 6140004190 | COL | LR-455 | | |
| L771 | 6200009141 | S.COL | NLV25T-6R8J | B | 23.4/10.6 |
| L772 | 6200009141 | S.COL | NLV25T-6R8J | B | 27.1/9 |
| L773 | 6140004220 | COL | LR-457 | | |
| L774 | 6140004160 | COL | LR-453 | | |
| L775 | 6140004160 | COL | LR-453 | | |
| L776 | 6140004160 | COL | LR-453 | | |
| L777 | 6140004220 | COL | LR-457 | | |
| L801 | 6200003281 | S.COL | NLV25T-2R2J | B | 214.4/45.7 |
| L802 | 6200003281 | S.COL | NLV25T-2R2J | B | 211.8/42.4 |
| L805 | 6200008090 | S.COL | LQW2BHN68NJ03L | T | 214.6/41.4 |
| L806 | 6200003041 | S.COL | NLV32T-R68J | T | 211.5/36.9 |
| L807 | 6200008090 | S.COL | LQW2BHN68NJ03L | T | 209.7/40 |
| L808 | 6200010870 | S.COL | C2520C-R33G-A (0.33U) | T | 209.8/43 |
| L831 | 6200003281 | S.COL | NLV25T-2R2J | B | 211.6/26.7 |
| L832 | 6200003281 | S.COL | NLV25T-2R2J | B | 213.2/23.7 |
| L833 | 6200003011 | S.COL | NLV32T-R27J | T | 214.2/29.7 |
| L834 | 6200003001 | S.COL | NLV32T-R22J | T | 209.7/32.9 |
| L835 | 6200003011 | S.COL | NLV32T-R27J | T | 209.4/27.3 |
| L900 | 6200001831 | S.COL | NLV32T-100J | B | 213.2/113.1 |
| L901 | 6200003950 | S.COL | HF50ACC 322513-T | B | 11.6/20.4 |
| L902 | 6200003950 | S.COL | HF50ACC 322513-T | B | 11.7/16.4 |
| L903 | 6200001831 | S.COL | NLV32T-100J | T | 7.4/27.5 |
| L904 | 6200001831 | S.COL | NLV32T-100J | T | 11.6/27.5 |
| L905 | 6140004380 | COL | LR-498 | | |
| L906 | 6200009690 | S.COL | LQH43CN101K03L | T | 216.9/114.5 |
| L907 | 6200001831 | S.COL | NLV32T-100J | B | 193.1/113.1 |
| L908 | 6140004380 | COL | LR-498 | | |
| L909 | 6200009690 | S.COL | LQH43CN101K03L | T | 196/115.1 |
| L950 | 6200001831 | S.COL | NLV32T-100J | B | 211.8/17 |
| L951 | 6140004380 | COL | LR-498 | | |
| L952 | 6200009690 | S.COL | LQH43CN101K03L | T | 213.8/3.4 |
| L953 | 6200001831 | S.COL | NLV32T-100J | B | 191.1/17 |
| L954 | 6140004380 | COL | LR-498 | | |
| L955 | 6200009690 | S.COL | LQH43CN101K03L | T | 196/3.3 |
| | | | | | |
| R1 | 7030003640 | S.RES | ERJ3GEYJ 473 V (47 K) | T | 181.4/92.2 |
| R3 | 7030003860 | S.RES | ERJ3GE JPW V | T | 182.1/90.3 |
| R101 | 7030003320 | S.RES | ERJ3GEYJ 101 V (100) | T | 7.2/67.9 |
| R102 | 7030003320 | S.RES | ERJ3GEYJ 101 V (100) | T | 7.9/71.3 |
| R103 | 7030003320 | S.RES | ERJ3GEYJ 101 V (100) | T | 8.7/67.9 |
| R104 | 7030003320 | S.RES | ERJ3GEYJ 101 V (100) | T | 9.3/71 |
| R105 | 7030003320 | S.RES | ERJ3GEYJ 101 V (100) | T | 10.6/71 |
| R106 | 7030003320 | S.RES | ERJ3GEYJ 101 V (100) | T | 11.3/89.9 |
| R107 | 7030003320 | S.RES | ERJ3GEYJ 101 V (100) | T | 11.6/87.9 |
| R108 | 7030003320 | S.RES | ERJ3GEYJ 101 V (100) | T | 11.1/83.2 |
| R117 | 7030003320 | S.RES | ERJ3GEYJ 101 V (100) | T | 9.8/83.5 |
| R118 | 7030003320 | S.RES | ERJ3GEYJ 101 V (100) | T | 8.5/83.5 |
| R119 | 7030003320 | S.RES | ERJ3GEYJ 101 V (100) | T | 7.4/87.2 |
| R120 | 7030003320 | S.RES | ERJ3GEYJ 101 V (100) | T | 6.7/83.2 |
| R121 | 7030003320 | S.RES | ERJ3GEYJ 101 V (100) | T | 6.9/92.2 |
| R122 | 7030003320 | S.RES | ERJ3GEYJ 101 V (100) | T | 7.1/94.8 |
| R123 | 7030003320 | S.RES | ERJ3GEYJ 101 V (100) | B | 10/95.5 |
| R124 | 7030003320 | S.RES | ERJ3GEYJ 101 V (100) | T | 11/94.3 |
| R133 | 7030003560 | S.RES | ERJ3GEYJ 103 V (10 K) | T | 191.2/55.8 |
| R134 | 7030003320 | S.RES | ERJ3GEYJ 101 V (100) | B | 10/98.9 |
| R141 | 7030003360 | S.RES | ERJ3GEYJ 221 V (220) | B | 5.6/14 |
| R142 | 7030003360 | S.RES | ERJ3GEYJ 221 V (220) | B | 5.6/15.7 |
| R143 | 7030003360 | S.RES | ERJ3GEYJ 221 V (220) | B | 5.1/19.2 |
| R351 | 7030003340 | S.RES | ERJ3GEYJ 151 V (150) | B | 197.7/90.7 |
| R352 | 7030003300 | S.RES | ERJ3GEYJ 680 V (68) | B | 193.9/87.5 |
| R354 | 7030003280 | S.RES | ERJ3GEYJ 470 V (47) | B | 200.9/84.8 |
| R355 | 7030003320 | S.RES | ERJ3GEYJ 101 V (100) | B | 193.9/81.3 |
| R357 | 7030003240 | S.RES | ERJ3GEYJ 220 V (22) | B | 197.8/71.6 |
| R358 | 7030003350 | S.RES | ERJ3GEYJ 181 V (180) | B | 194.4/70.3 |
| R360 | 7030003320 | S.RES | ERJ3GEYJ 101 V (100) | T | 191.8/66.1 |
| R371 | 7030003320 | S.RES | ERJ3GEYJ 101 V (100) | T | 217.4/71.2 |
| R372 | 7030003320 | S.RES | ERJ3GEYJ 101 V (100) | B | 209.5/61.9 |
| R373 | 7030003320 | S.RES | ERJ3GEYJ 101 V (100) | B | 209.5/58.9 |
| R381 | 7030003520 | S.RES | ERJ3GEYJ 472 V (4.7 K) | T | 231.4/51.9 |
| R382 | 7030003360 | S.RES | ERJ3GEYJ 221 V (220) | B | 239.8/112.7 |
| R383 | 7030003680 | S.RES | ERJ3GEYJ 104 V (100 K) | T | 232.3/49.1 |
| R384 | 7030003420 | S.RES | ERJ3GEYJ 681 V (680) | B | 236/49.9 |
| R385 | 7030003420 | S.RES | ERJ3GEYJ 681 V (680) | B | 231.3/46.7 |
| R386 | 7030003480 | S.RES | ERJ3GEYJ 222 V (2.2 K) | B | 237.6/62.6 |
| R387 | 7030003560 | S.RES | ERJ3GEYJ 103 V (10 K) | B | 238.8/55.5 |
| R388 | 7540000130 | ABS | 2P-50A-301 | | |
| R389 | 7030003420 | S.RES | ERJ3GEYJ 681 V (680) | T | 235/65.4 |

## [BPF UNIT]

| REF NO. | PARTS NO. | DESCRIPTION | | M. | H/V LOCATION |
|---|---|---|---|---|---|
| R390 | 7030003560 | S.RES | ERJ3GEYJ 103 V (10 K) | T | 233/51.9 |
| R391 | 7030003680 | S.RES | ERJ3GEYJ 104 V (100 K) | T | 234.3/51.9 |
| R392 | 7030003420 | S.RES | ERJ3GEYJ 681 V (680) | B | 234.7/49.9 |
| R393 | 7030003420 | S.RES | ERJ3GEYJ 681 V (680) | B | 231.3/48 |
| R394 | 7030003420 | S.RES | ERJ3GEYJ 681 V (680) | T | 235/64.1 |
| R395 | 7030003420 | S.RES | ERJ3GEYJ 681 V (680) | B | 235.2/56.4 |
| R396 | 7030003420 | S.RES | ERJ3GEYJ 681 V (680) | B | 235.2/55.1 |
| R401 | 7030003360 | S.RES | ERJ3GEYJ 221 V (220) | B | 227.6/96.2 |
| R402 | 7030003680 | S.RES | ERJ3GEYJ 104 V (100 K) | T | 234.5/111.6 |
| R403 | 7030003480 | S.RES | ERJ3GEYJ 222 V (2.2 K) | T | 231.9/110.3 |
| R404 | 7030003860 | S.RES | ERJ3GE JPW V | T | 234.5/110.3 |
| R441 | 7030003360 | S.RES | ERJ3GEYJ 221 V (220) | B | 11/24.4 |
| R442 | 7030003360 | S.RES | ERJ3GEYJ 221 V (220) | B | 8.2/23.4 |
| R451 | 7030003320 | S.RES | ERJ3GEYJ 101 V (100) | T | 10.6/32.9 |
| R452 | 7030003320 | S.RES | ERJ3GEYJ 101 V (100) | T | 11.9/33.1 |
| R453 | 7030003320 | S.RES | ERJ3GEYJ 101 V (100) | T | 13.2/33.1 |
| R454 | 7030003320 | S.RES | ERJ3GEYJ 101 V (100) | T | 14.5/33.1 |
| R455 | 7030003320 | S.RES | ERJ3GEYJ 101 V (100) | T | 14.5/36.9 |
| R456 | 7030003320 | S.RES | ERJ3GEYJ 101 V (100) | T | 11.1/46.9 |
| R457 | 7030003320 | S.RES | ERJ3GEYJ 101 V (100) | T | 8.9/46.3 |
| R458 | 7030003320 | S.RES | ERJ3GEYJ 101 V (100) | T | 8.9/47.6 |
| R467 | 7030003320 | S.RES | ERJ3GEYJ 101 V (100) | T | 10.6/49.6 |
| R468 | 7030003320 | S.RES | ERJ3GEYJ 101 V (100) | T | 13.6/50.2 |
| R469 | 7030003320 | S.RES | ERJ3GEYJ 101 V (100) | T | 7.6/49.4 |
| R470 | 7030003320 | S.RES | ERJ3GEYJ 101 V (100) | T | 6.9/50.7 |
| R471 | 7030003320 | S.RES | ERJ3GEYJ 101 V (100) | T | 6.2/52.6 |
| R472 | 7030003320 | S.RES | ERJ3GEYJ 101 V (100) | T | 9.2/53 |
| R473 | 7030003320 | S.RES | ERJ3GEYJ 101 V (100) | T | 10.5/53.7 |
| R474 | 7030003320 | S.RES | ERJ3GEYJ 101 V (100) | T | 11.8/54.2 |
| R475 | 7030003320 | S.RES | ERJ3GEYJ 101 V (100) | T | 10.7/63.9 |
| R481 | 7030003560 | S.RES | ERJ3GEYJ 103 V (10 K) | B | 196.9/55.9 |
| R501 | 7030003640 | S.RES | ERJ3GEYJ 473 V (47 K) | T | 183/30 |
| R503 | 7030003860 | S.RES | ERJ3GE JPW V | T | 182.2/31.9 |
| R851 | 7030003340 | S.RES | ERJ3GEYJ 151 V (150) | B | 198.2/32.1 |
| R852 | 7030003300 | S.RES | ERJ3GEYJ 680 V (68) | B | 193.5/32.1 |
| R854 | 7030003280 | S.RES | ERJ3GEYJ 470 V (47) | B | 200.9/34.7 |
| R855 | 7030003320 | S.RES | ERJ3GEYJ 101 V (100) | B | 193.5/38.3 |
| R857 | 7030003240 | S.RES | ERJ3GEYJ 220 V (22) | B | 197.9/48.2 |
| R858 | 7030003350 | S.RES | ERJ3GEYJ 181 V (180) | B | 193.8/49.7 |
| R860 | 7030003320 | S.RES | ERJ3GEYJ 101 V (100) | T | 192/51 |
| R871 | 7030003360 | S.RES | ERJ3GEYJ 221 V (220) | B | 238/19.5 |
| R872 | 7030003680 | S.RES | ERJ3GEYJ 104 V (100 K) | B | 236.5/14.4 |
| R873 | 7030003480 | S.RES | ERJ3GEYJ 222 V (2.2 K) | B | 239.6/16 |
| R874 | 7030003860 | S.RES | ERJ3GE JPW V | B | 236.5/16 |
| R900 | 7030003280 | S.RES | ERJ3GEYJ 470 V (47) | B | 212.8/117.1 |
| R901 | 7030003440 | S.RES | ERJ3GEYJ 102 V (1 K) | T | 207.2/117.4 |
| R902 | 7030003530 | S.RES | ERJ3GEYJ 562 V (5.6 K) | T | 210.4/116.6 |
| R903 | 7030003380 | S.RES | ERJ3GEYJ 331 V (330) | B | 203.9/113.3 |
| R904 | 7030003220 | S.RES | ERJ3GEYJ 150 V (15) | B | 206.3/111.6 |
| R905 | 7030003380 | S.RES | ERJ3GEYJ 331 V (330) | B | 203.3/111.8 |
| R906 | 7030003320 | S.RES | ERJ3GEYJ 101 V (100) | T | 12.5/92.8 |
| R907 | 7030003320 | S.RES | ERJ3GEYJ 101 V (100) | T | 13.8/92.8 |
| R908 | 7030003280 | S.RES | ERJ3GEYJ 470 V (47) | B | 194.5/116.4 |
| R909 | 7030003440 | S.RES | ERJ3GEYJ 102 V (1 K) | T | 185.4/115.9 |
| R910 | 7030003530 | S.RES | ERJ3GEYJ 562 V (5.6 K) | T | 189.6/116.7 |
| R911 | 7030003320 | S.RES | ERJ3GEYJ 101 V (100) | B | 209.4/110.8 |
| R912 | 7030003320 | S.RES | ERJ3GEYJ 101 V (100) | B | 187.5/111.2 |
| R913 | 7030004050 | S.RES | ERJ3GEYJ 1R0 V (1) | B | 189.7/106.1 |
| R950 | 7030003280 | S.RES | ERJ3GEYJ 470 V (47) | B | 210.2/20 |
| R951 | 7030003440 | S.RES | ERJ3GEYJ 102 V (1 K) | T | 207.7/21.4 |
| R952 | 7030003530 | S.RES | ERJ3GEYJ 562 V (5.6 K) | T | 211/20.8 |
| R953 | 7030003380 | S.RES | ERJ3GEYJ 331 V (330) | B | 203.4/18.4 |
| R954 | 7030003220 | S.RES | ERJ3GEYJ 150 V (15) | B | 205.6/16.7 |
| R955 | 7030003380 | S.RES | ERJ3GEYJ 331 V (330) | B | 202.8/16.7 |
| R956 | 7030003320 | S.RES | ERJ3GEYJ 101 V (100) | T | 8.3/65 |
| R957 | 7030003320 | S.RES | ERJ3GEYJ 101 V (100) | B | 11.6/60.5 |
| R958 | 7030003280 | S.RES | ERJ3GEYJ 470 V (47) | B | 189.5/19.9 |
| R959 | 7030003440 | S.RES | ERJ3GEYJ 102 V (1 K) | T | 186.5/21.4 |
| R960 | 7030003530 | S.RES | ERJ3GEYJ 562 V (5.6 K) | T | 191.5/20 |
| R961 | 7030003320 | S.RES | ERJ3GEYJ 101 V (100) | B | 208.3/16.4 |
| R962 | 7030003320 | S.RES | ERJ3GEYJ 101 V (100) | B | 187.7/16.4 |
| R963 | 7030004050 | S.RES | ERJ3GEYJ 1R0 V (1) | B | 181.4/16.5 |
| | | | | | |
| C1 | 4030006880 | S.CER | C1608 JB 1H 472K-T | B | 183.4/92.3 |
| C2 | 4030006880 | S.CER | C1608 JB 1H 472K-T | T | 185.3/91.5 |
| C3 | 4030006880 | S.CER | C1608 JB 1H 472K-T | T | 184.1/99.8 |
| C4 | 4030006880 | S.CER | C1608 JB 1H 472K-T | B | 183.1/73.9 |
| C5 | 4030006880 | S.CER | C1608 JB 1H 472K-T | B | 182.5/66.5 |
| C6 | 4030006880 | S.CER | C1608 JB 1H 472K-T | T | 183.9/73.9 |
| C7 | 4030017840 | S.CER | C2012 CH 1H 222J-T | T | 182.8/86.4 |
| C8 | 4030017850 | S.CER | C2012 CH 1H 272J-T | T | 182.9/84.1 |
| C9 | 4030017820 | S.CER | C2012 CH 1H 122J-T | T | 182.9/82.3 |
| C10 | 4030017840 | S.CER | C2012 CH 1H 222J-T | T | 182.8/77.5 |
| C21 | 4030006880 | S.CER | C1608 JB 1H 472K-T | B | 165.3/112.2 |
| C22 | 4030006880 | S.CER | C1608 JB 1H 472K-T | B | 162.3/112.2 |
| C23 | 4030006880 | S.CER | C1608 JB 1H 472K-T | B | 166.8/110.5 |
| C24 | 4030006880 | S.CER | C1608 JB 1H 472K-T | T | 163.7/81.5 |
| C25 | 4030006880 | S.CER | C1608 JB 1H 472K-T | B | 171.5/76.9 |
| C26 | 4030006880 | S.CER | C1608 JB 1H 472K-T | B | 168.9/77.7 |
| C27 | 4030017810 | S.CER | C1608 CH 1H 102J-T | B | 162.6/104.3 |
| C28 | 4030017810 | S.CER | C1608 CH 1H 102J-T | B | 162.6/102.4 |
| C29 | 4030010760 | S.CER | C1608 CH 1H 331J-T | B | 168.7/98 |
| C30 | 4030007140 | S.CER | C1608 CH 1H 121J-T | B | 168.7/96.1 |
| C31 | 4030007160 | S.CER | C1608 CH 1H 181J-T | B | 164.1/93.9 |
| C32 | 4030007060 | S.CER | C1608 CH 1H 270J-T | B | 166.1/94 |
| C33 | 4030010760 | S.CER | C1608 CH 1H 331J-T | B | 168.7/93.2 |
| C34 | 4030007090 | S.CER | C1608 CH 1H 470J-T | B | 168.7/90.8 |
| C35 | 4030007160 | S.CER | C1608 CH 1H 181J-T | B | 164.3/89.3 |
| C36 | 4030007060 | S.CER | C1608 CH 1H 270J-T | B | 164.2/91 |
| C38 | 4030010760 | S.CER | C1608 CH 1H 331J-T | B | 165.6/83.4 |
| C39 | 4030007140 | S.CER | C1608 CH 1H 121J-T | B | 165.6/85.5 |
| C40 | 4030017810 | S.CER | C1608 CH 1H 102J-T | B | 170/74.5 |
| C41 | 4030017810 | S.CER | C1608 CH 1H 102J-T | B | 170/72.7 |
| C51 | 4030006880 | S.CER | C1608 JB 1H 472K-T | T | 153.8/116 |

M.=Mounted side (T: Mounted on the Top side, B: Mounted on the Bottom side)
S.=Surface mount

## [BPF UNIT]

| REF NO. | PARTS NO. | DESCRIPTION | M. | H/V LOCATION |
|---|---|---|---|---|
| C52 | 4030006880 | S.CER C1608 JB 1H 472K-T | B | 150.6/112.3 |
| C53 | 4030006880 | S.CER C1608 JB 1H 472K-T | B | 153.8/116 |
| C54 | 4030006880 | S.CER C1608 JB 1H 472K-T | B | 160.3/71.9 |
| C55 | 4030006880 | S.CER C1608 JB 1H 472K-T | B | 160.2/65.2 |
| C56 | 4030006880 | S.CER C1608 JB 1H 472K-T | T | 165.1/68.5 |
| C57 | 4030017800 | S.CER C1608 CH 1H 561J-T | B | 143.6/99.3 |
| C58 | 4030010760 | S.CER C1608 CH 1H 331J-T | B | 143.6/97.2 |
| C59 | 4030010760 | S.CER C1608 CH 1H 331J-T | B | 144.2/94.6 |
| C60 | 4030007080 | S.CER C1608 CH 1H 390J-T | B | 144.2/92.2 |
| C61 | 4030007100 | S.CER C1608 CH 1H 560J-T | B | 141.8/90.2 |
| C62 | 4030010760 | S.CER C1608 CH 1H 331J-T | B | 139.5/90.2 |
| C63 | 4030010760 | S.CER C1608 CH 1H 331J-T | B | 143.8/83 |
| C64 | 4030007090 | S.CER C1608 CH 1H 470J-T | B | 143.8/85.3 |
| C65 | 4030010760 | S.CER C1608 CH 1H 331J-T | B | 141.1/82 |
| C66 | 4030007100 | S.CER C1608 CH 1H 560J-T | B | 138.9/82 |
| C67 | 4030010760 | S.CER C1608 CH 1H 331J-T | B | 143.7/78.7 |
| C68 | 4030007080 | S.CER C1608 CH 1H 390J-T | B | 143.7/81.1 |
| C69 | 4030017800 | S.CER C1608 CH 1H 561J-T | B | 144/75.1 |
| C70 | 4030010760 | S.CER C1608 CH 1H 331J-T | B | 144/77.1 |
| C81 | 4030006880 | S.CER C1608 JB 1H 472K-T | B | 139.9/115 |
| C82 | 4030006880 | S.CER C1608 JB 1H 472K-T | B | 138.1/111.8 |
| C83 | 4030006880 | S.CER C1608 JB 1H 472K-T | B | 140.7/117 |
| C84 | 4030006880 | S.CER C1608 JB 1H 472K-T | B | 138.4/72.1 |
| C85 | 4030006880 | S.CER C1608 JB 1H 472K-T | B | 144.9/66.5 |
| C86 | 4030006880 | S.CER C1608 JB 1H 472K-T | B | 143/68.1 |
| C87 | 4030017800 | S.CER C1608 CH 1H 561J-T | B | 126.7/116.6 |
| C88 | 4030011330 | S.CER C1608 CH 1H 391J-T | B | 126.7/114.8 |
| C89 | 4030007160 | S.CER C1608 CH 1H 181J-T | B | 126.8/104.3 |
| C90 | 4030007070 | S.CER C1608 CH 1H 330J-T | B | 126.8/106.2 |
| C91 | 4030007030 | S.CER C1608 CH 1H 150J-T | B | 130.7/102.1 |
| C92 | 4030007120 | S.CER C1608 CH 1H 820J-T | B | 128.9/102.1 |
| C93 | 4030007140 | S.CER C1608 CH 1H 121J-T | B | 126.6/101.3 |
| C94 | 4030007100 | S.CER C1608 CH 1H 560J-T | B | 126.6/99.6 |
| C95 | 4030007120 | S.CER C1608 CH 1H 820J-T | B | 129.4/92.5 |
| C96 | 4030007030 | S.CER C1608 CH 1H 150J-T | B | 131.4/92.5 |
| C97 | 4030007160 | S.CER C1608 CH 1H 181J-T | B | 126.7/89.6 |
| C98 | 4030007070 | S.CER C1608 CH 1H 330J-T | B | 126.7/88 |
| C99 | 4030017800 | S.CER C1608 CH 1H 561J-T | B | 126.7/86.1 |
| C100 | 4030011330 | S.CER C1608 CH 1H 391J-T | B | 126.7/84.3 |
| C111 | 4030006880 | S.CER C1608 JB 1H 472K-T | B | 118.1/115.2 |
| C112 | 4030006880 | S.CER C1608 JB 1H 472K-T | B | 115.2/112.4 |
| C113 | 4030006880 | S.CER C1608 JB 1H 472K-T | B | 118.9/117.6 |
| C114 | 4030006880 | S.CER C1608 JB 1H 472K-T | B | 107.7/69.4 |
| C115 | 4030006880 | S.CER C1608 JB 1H 472K-T | B | 104.3/65.9 |
| C116 | 4030006880 | S.CER C1608 JB 1H 472K-T | T | 108.7/67.5 |
| C117 | 4030010760 | S.CER C1608 CH 1H 331J-T | B | 110.3/109.3 |
| C118 | 4030007150 | S.CER C1608 CH 1H 151J-T | B | 110.3/107.8 |
| C119 | 4030007150 | S.CER C1608 CH 1H 151J-T | B | 110.3/96.6 |
| C120 | 4030007060 | S.CER C1608 CH 1H 270J-T | B | 110.3/98.3 |
| C121 | 4030007060 | S.CER C1608 CH 1H 270J-T | B | 106.8/95 |
| C122 | 4030007140 | S.CER C1608 CH 1H 121J-T | B | 105.2/95 |
| C123 | 4030007150 | S.CER C1608 CH 1H 151J-T | B | 110.3/94.3 |
| C124 | 4030007010 | S.CER C1608 CH 1H 100D-T | B | 110.3/92.7 |
| C125 | 4030007140 | S.CER C1608 CH 1H 121J-T | B | 109.6/84.4 |
| C126 | 4030007060 | S.CER C1608 CH 1H 270J-T | B | 107.5/84.4 |
| C127 | 4030007150 | S.CER C1608 CH 1H 151J-T | B | 110.3/80.6 |
| C128 | 4030007060 | S.CER C1608 CH 1H 270J-T | B | 110.3/78.7 |
| C129 | 4030010760 | S.CER C1608 CH 1H 331J-T | B | 110.3/73.7 |
| C130 | 4030007150 | S.CER C1608 CH 1H 151J-T | B | 110.4/72 |
| C141 | 4030006880 | S.CER C1608 JB 1H 472K-T | B | 105.2/115.2 |
| C142 | 4030006880 | S.CER C1608 JB 1H 472K-T | B | 97.2/108.7 |
| C143 | 4030006880 | S.CER C1608 JB 1H 472K-T | B | 105.6/117.6 |
| C144 | 4030006880 | S.CER C1608 JB 1H 472K-T | B | 91/72.9 |
| C145 | 4030006880 | S.CER C1608 JB 1H 472K-T | B | 90.2/65.9 |
| C146 | 4030006880 | S.CER C1608 JB 1H 472K-T | T | 93.4/70.3 |
| C147 | 4030007170 | S.CER C1608 CH 1H 221J-T | B | 92.3/109.8 |
| C148 | 4030007170 | S.CER C1608 CH 1H 221J-T | B | 92.3/108 |
| C149 | 4030007130 | S.CER C1608 CH 1H 101J-T | B | 92.4/104.5 |
| C150 | 4030007050 | S.CER C1608 CH 1H 220J-T | B | 92.4/102.6 |
| C151 | 4030007070 | S.CER C1608 CH 1H 330J-T | B | 93.1/99.9 |
| C152 | 4030007080 | S.CER C1608 CH 1H 390J-T | B | 94.8/99.9 |
| C153 | 4030007120 | S.CER C1608 CH 1H 820J-T | B | 92.4/94.8 |
| C154 | 4030007050 | S.CER C1608 CH 1H 220J-T | B | 92.4/93.3 |
| C155 | 4030007080 | S.CER C1608 CH 1H 390J-T | B | 95.5/92.5 |
| C156 | 4030007070 | S.CER C1608 CH 1H 330J-T | B | 97.7/92.5 |
| C157 | 4030007130 | S.CER C1608 CH 1H 101J-T | B | 92.4/90.8 |
| C158 | 4030007050 | S.CER C1608 CH 1H 220J-T | B | 92.4/89.2 |
| C159 | 4030007170 | S.CER C1608 CH 1H 221J-T | B | 92.4/79.9 |
| C160 | 4030007170 | S.CER C1608 CH 1H 221J-T | B | 92.4/77.8 |
| C171 | 4030006880 | S.CER C1608 JB 1H 472K-T | B | 73.9/115.2 |
| C172 | 4030006880 | S.CER C1608 JB 1H 472K-T | B | 71.1/112.4 |
| C173 | 4030006880 | S.CER C1608 JB 1H 472K-T | B | 74.9/117.6 |
| C174 | 4030006880 | S.CER C1608 JB 1H 472K-T | B | 78.9/72.9 |
| C175 | 4030006880 | S.CER C1608 JB 1H 472K-T | B | 77.9/65.8 |
| C176 | 4030006880 | S.CER C1608 JB 1H 472K-T | B | 81.6/75.9 |
| C177 | 4030007170 | S.CER C1608 CH 1H 221J-T | B | 78.3/115.3 |
| C178 | 4030007110 | S.CER C1608 CH 1H 680J-T | B | 78.3/112.9 |
| C179 | 4030007090 | S.CER C1608 CH 1H 470J-T | B | 74.1/103.9 |
| C180 | 4030007090 | S.CER C1608 CH 1H 470J-T | B | 74.1/105.7 |
| C181 | 4030007070 | S.CER C1608 CH 1H 330J-T | B | 73.3/101.4 |
| C182 | 4030007070 | S.CER C1608 CH 1H 330J-T | B | 71.4/101.4 |
| C183 | 4030007120 | S.CER C1608 CH 1H 820J-T | B | 74.1/98.9 |
| C185 | 4030007070 | S.CER C1608 CH 1H 330J-T | B | 73.3/93.6 |
| C186 | 4030007070 | S.CER C1608 CH 1H 330J-T | B | 71.4/93.6 |
| C187 | 4030007090 | S.CER C1608 CH 1H 470J-T | B | 74.1/90.2 |
| C188 | 4030007090 | S.CER C1608 CH 1H 470J-T | B | 74.1/88.1 |
| C189 | 4030007170 | S.CER C1608 CH 1H 221J-T | B | 74.1/85.9 |
| C190 | 4030007110 | S.CER C1608 CH 1H 680J-T | B | 74.1/83.9 |
| C201 | 4030006880 | S.CER C1608 JB 1H 472K-T | B | 61.6/115.2 |
| C202 | 4030006880 | S.CER C1608 JB 1H 472K-T | B | 58.8/112.4 |
| C203 | 4030006880 | S.CER C1608 JB 1H 472K-T | B | 58.2/116.1 |
| C204 | 4030006880 | S.CER C1608 JB 1H 472K-T | B | 66.4/76.6 |
| C205 | 4030006880 | S.CER C1608 JB 1H 472K-T | B | 71.2/80.2 |
| C206 | 4030006880 | S.CER C1608 JB 1H 472K-T | B | 70.2/74.8 |
| C207 | 4030007160 | S.CER C1608 CH 1H 181J-T | B | 57.7/103.6 |

## [BPF UNIT]

| REF NO. | PARTS NO. | DESCRIPTION | M. | H/V LOCATION |
|---|---|---|---|---|
| C208 | 4030007090 | S.CER C1608 CH 1H 470J-T | B | 57.7/102 |
| C209 | 4030007090 | S.CER C1608 CH 1H 470J-T | B | 64.8/95.3 |
| C210 | 4030007040 | S.CER C1608 CH 1H 180J-T | B | 63.2/95.3 |
| C211 | 4030007030 | S.CER C1608 CH 1H 150J-T | B | 60.8/94.5 |
| C212 | 4030007050 | S.CER C1608 CH 1H 220J-T | B | 60.8/92.9 |
| C213 | 4030007090 | S.CER C1608 CH 1H 470J-T | B | 57.7/92.9 |
| C214 | 4030006990 | S.CER C1608 CH 1H 080D-T | B | 57.7/94.5 |
| C215 | 4030007050 | S.CER C1608 CH 1H 220J-T | B | 60.1/85.1 |
| C216 | 4030007030 | S.CER C1608 CH 1H 150J-T | B | 58.5/85.1 |
| C217 | 4030007090 | S.CER C1608 CH 1H 470J-T | B | 57.7/82.7 |
| C218 | 4030007040 | S.CER C1608 CH 1H 180J-T | B | 57.7/81.1 |
| C219 | 4030007160 | S.CER C1608 CH 1H 181J-T | B | 57.7/79.5 |
| C220 | 4030007090 | S.CER C1608 CH 1H 470J-T | B | 57.7/77.9 |
| C231 | 4030006880 | S.CER C1608 JB 1H 472K-T | B | 39.4/115.3 |
| C232 | 4030006880 | S.CER C1608 JB 1H 472K-T | B | 36.6/112.4 |
| C233 | 4030006880 | S.CER C1608 JB 1H 472K-T | B | 40.3/117.5 |
| C234 | 4030006880 | S.CER C1608 JB 1H 472K-T | B | 46.2/73.5 |
| C235 | 4030006880 | S.CER C1608 JB 1H 472K-T | B | 49/69.2 |
| C236 | 4030006880 | S.CER C1608 JB 1H 472K-T | B | 50.4/69.1 |
| C237 | 4030007140 | S.CER C1608 CH 1H 121J-T | B | 41.2/109.8 |
| C238 | 4030007040 | S.CER C1608 CH 1H 180J-T | B | 41.2/108.2 |
| C239 | 4030007070 | S.CER C1608 CH 1H 330J-T | B | 41.2/103.8 |
| C240 | 4030007040 | S.CER C1608 CH 1H 180J-T | B | 41.2/102.2 |
| C241 | 4030007010 | S.CER C1608 CH 1H 100D-T | B | 40.5/99.8 |
| C242 | 4030007070 | S.CER C1608 CH 1H 330J-T | B | 38.9/99.8 |
| C243 | 4030007090 | S.CER C1608 CH 1H 470J-T | B | 41.2/94.8 |
| C245 | 4030007070 | S.CER C1608 CH 1H 330J-T | B | 40.5/91.3 |
| C246 | 4030007010 | S.CER C1608 CH 1H 100D-T | B | 38.9/91.3 |
| C247 | 4030007070 | S.CER C1608 CH 1H 330J-T | B | 41.2/88.9 |
| C248 | 4030007040 | S.CER C1608 CH 1H 180J-T | B | 41.2/87.3 |
| C249 | 4030007140 | S.CER C1608 CH 1H 121J-T | B | 41.2/85.7 |
| C250 | 4030007040 | S.CER C1608 CH 1H 180J-T | B | 41.2/84.1 |
| C261 | 4030006880 | S.CER C1608 JB 1H 472K-T | B | 27/115.2 |
| C262 | 4030006880 | S.CER C1608 JB 1H 472K-T | B | 24.3/112.4 |
| C263 | 4030006880 | S.CER C1608 JB 1H 472K-T | B | 29.7/111.6 |
| C264 | 4030006880 | S.CER C1608 JB 1H 472K-T | T | 36.5/70.9 |
| C265 | 4030006880 | S.CER C1608 JB 1H 472K-T | T | 36.6/67.9 |
| C266 | 4030006880 | S.CER C1608 JB 1H 472K-T | B | 36.7/70 |
| C267 | 4030007130 | S.CER C1608 CH 1H 101J-T | B | 23.2/103.5 |
| C268 | 4030007030 | S.CER C1608 CH 1H 150J-T | B | 23.2/101.9 |
| C269 | 4030007050 | S.CER C1608 CH 1H 220J-T | B | 30.3/95.3 |
| C270 | 4030007020 | S.CER C1608 CH 1H 120J-T | B | 28.7/95.3 |
| C271 | 4030007050 | S.CER C1608 CH 1H 220J-T | B | 26.3/94.5 |
| C273 | 4030007050 | S.CER C1608 CH 1H 220J-T | B | 23.2/94.5 |
| C274 | 4030006980 | S.CER C1608 CH 1H 070D-T | B | 23.2/92.9 |
| C275 | 4030007050 | S.CER C1608 CH 1H 220J-T | B | 24/85.1 |
| C277 | 4030007050 | S.CER C1608 CH 1H 220J-T | B | 23.2/81.1 |
| C278 | 4030007020 | S.CER C1608 CH 1H 120J-T | B | 23.2/82.7 |
| C279 | 4030007130 | S.CER C1608 CH 1H 101J-T | B | 23.3/73.6 |
| C280 | 4030007030 | S.CER C1608 CH 1H 150J-T | B | 23.3/77.9 |
| C291 | 4030006880 | S.CER C1608 JB 1H 472K-T | B | 218.9/73.3 |
| C292 | 4030006880 | S.CER C1608 JB 1H 472K-T | B | 214.4/77.4 |
| C293 | 4030006880 | S.CER C1608 JB 1H 472K-T | B | 222.7/76.6 |
| C294 | 4030006880 | S.CER C1608 JB 1H 472K-T | B | 209.7/73 |
| C295 | 4030006880 | S.CER C1608 JB 1H 472K-T | B | 207.6/77.5 |
| C296 | 4030006880 | S.CER C1608 JB 1H 472K-T | B | 203.9/73.5 |
| C297 | 4030007150 | S.CER C1608 CH 1H 151J-T | T | 213/79.9 |
| C302 | 4030007030 | S.CER C1608 CH 1H 150J-T | T | 210.2/82.7 |
| C303 | 4030007130 | S.CER C1608 CH 1H 101J-T | T | 211.7/79.9 |
| C304 | 4030007040 | S.CER C1608 CH 1H 180J-T | T | 208.4/79.9 |
| C321 | 4030006880 | S.CER C1608 JB 1H 472K-T | T | 218.8/97.4 |
| C322 | 4030006880 | S.CER C1608 JB 1H 472K-T | T | 218.8/98.7 |
| C323 | 4030006880 | S.CER C1608 JB 1H 472K-T | B | 213/91 |
| C324 | 4030006880 | S.CER C1608 JB 1H 472K-T | B | 209.3/90.7 |
| C325 | 4030006880 | S.CER C1608 JB 1H 472K-T | T | 206.6/98.8 |
| C326 | 4030006880 | S.CER C1608 JB 1H 472K-T | T | 204/98.8 |
| C327 | 4030007100 | S.CER C1608 CH 1H 560J-T | T | 210.7/90.3 |
| C329 | 4030007110 | S.CER C1608 CH 1H 680J-T | T | 208.1/90.3 |
| C331 | 4030007100 | S.CER C1608 CH 1H 560J-T | T | 208.8/96.6 |
| C353 | 4030006880 | S.CER C1608 JB 1H 472K-T | B | 189.1/91.2 |
| C354 | 4030006880 | S.CER C1608 JB 1H 472K-T | B | 189.5/94.6 |
| C355 | 4030006880 | S.CER C1608 JB 1H 472K-T | T | 189/92.4 |
| C356 | 4030006880 | S.CER C1608 JB 1H 472K-T | B | 189.5/86.4 |
| C357 | 4030006880 | S.CER C1608 JB 1H 472K-T | T | 189/86.1 |
| C358 | 4030006880 | S.CER C1608 JB 1H 472K-T | B | 189.1/89.1 |
| C359 | 4030006880 | S.CER C1608 JB 1H 472K-T | T | 189/79.9 |
| C360 | 4030006880 | S.CER C1608 JB 1H 472K-T | B | 189.5/80.2 |
| C361 | 4030006880 | S.CER C1608 JB 1H 472K-T | B | 189.5/83 |
| C362 | 4030006880 | S.CER C1608 JB 1H 472K-T | T | 189/73.7 |
| C363 | 4030006880 | S.CER C1608 JB 1H 472K-T | B | 189.5/74 |
| C364 | 4030006880 | S.CER C1608 JB 1H 472K-T | B | 189.5/76.8 |
| C365 | 4030006880 | S.CER C1608 JB 1H 472K-T | T | 194/68.8 |
| C371 | 4030006880 | S.CER C1608 JB 1H 472K-T | T | 215.9/69.9 |
| C388 | 4030006880 | S.CER C1608 JB 1H 472K-T | B | 239.8/114.3 |
| C389 | 4030010210 | S.CER C3216 JB 1C 105M-T | B | 247.3/111.1 |
| C390 | 4030011600 | S.CER C1608 JB 1E 104K-T | T | 226.2/49.8 |
| C391 | 4030011600 | S.CER C1608 JB 1E 104K-T | B | 237.5/53.2 |
| C392 | 4030011600 | S.CER C1608 JB 1E 104K-T | T | 228.9/62.5 |
| C393 | 4030008860 | S.CER C1608 JB 1H 153K-T | B | 233.2/45.5 |
| C394 | 4030010210 | S.CER C3216 JB 1C 105M-T | B | 235.1/59.6 |
| C395 | 4030008860 | S.CER C1608 JB 1H 153K-T | B | 233.2/40 |
| C396 | 4030011600 | S.CER C1608 JB 1E 104K-T | B | 235.5/43.8 |
| C397 | 4550006470 | S.TAN TEESVB2 1D 106M8R | B | 227/44 |
| C398 | 4030011600 | S.CER C1608 JB 1E 104K-T | T | 5.4/102.8 |
| C399 | 4030011600 | S.CER C1608 JB 1E 104K-T | T | 5.3/77.8 |
| C401 | 4030006880 | S.CER C1608 JB 1H 472K-T | B | 223.9/95.5 |
| C402 | 4030010210 | S.CER C3216 JB 1C 105M-T | B | 234/107.1 |
| C403 | 4030009520 | S.CER C1608 CH 1H 020B-T | B | 233.9/109.3 |
| C404 | 4030007050 | S.CER C1608 CH 1H 220J-T | B | 233.9/110.9 |
| C405 | 4030010760 | S.CER C1608 CH 1H 331J-T | B | 236.1/113.4 |
| C498 | 4030011600 | S.CER C1608 JB 1E 104K-T | T | 5.3/60.4 |
| C499 | 4030011600 | S.CER C1608 JB 1E 104K-T | T | 6.1/39.7 |
| C501 | 4030006880 | S.CER C1608 JB 1H 472K-T | B | 184.9/22 |
| C502 | 4030006880 | S.CER C1608 JB 1H 472K-T | B | 181.6/22 |
| C503 | 4030006880 | S.CER C1608 JB 1H 472K-T | B | 183.9/31.7 |

M.=Mounted side (T: Mounted on the Top side, B: Mounted on the Bottom side)
S.=Surface mount

## [BPF UNIT]

| REF NO. | PARTS NO. | DESCRIPTION | M. | H/V LOCATION |
|---|---|---|---|---|
| C504 | 4030006880 | S.CER C1608 JB 1H 472K-T | B | 183.7/54.7 |
| C505 | 4030006880 | S.CER C1608 JB 1H 472K-T | T | 185.3/47.1 |
| C506 | 4030006880 | S.CER C1608 JB 1H 472K-T | B | 184.1/47.2 |
| C507 | 4030017840 | S.CER C2012 CH 1H 222J-T | T | 183/35.4 |
| C508 | 4030017850 | S.CER C2012 CH 1H 272J-T | T | 182.9/37.7 |
| C509 | 4030017820 | S.CER C2012 CH 1H 122J-T | T | 182.9/39.5 |
| C510 | 4030017840 | S.CER C2012 CH 1H 222J-T | T | 182.9/44.3 |
| C531 | 4030006880 | S.CER C1608 JB 1H 472K-T | B | 165.7/5.6 |
| C532 | 4030006880 | S.CER C1608 JB 1H 472K-T | B | 165.2/2.3 |
| C533 | 4030006880 | S.CER C1608 JB 1H 472K-T | B | 164.5/9 |
| C534 | 4030006880 | S.CER C1608 JB 1H 472K-T | B | 164/54.6 |
| C535 | 4030006880 | S.CER C1608 JB 1H 472K-T | B | 167.7/49.6 |
| C536 | 4030006880 | S.CER C1608 JB 1H 472K-T | B | 169.4/53.7 |
| C537 | 4030017810 | S.CER C1608 CH 1H 102J-T | B | 168.6/20.1 |
| C538 | 4030017810 | S.CER C1608 CH 1H 102J-T | B | 168.6/21.9 |
| C539 | 4030010760 | S.CER C1608 CH 1H 331J-T | B | 168.3/24.5 |
| C540 | 4030007140 | S.CER C1608 CH 1H 121J-T | B | 168.3/26.7 |
| C541 | 4030007160 | S.CER C1608 CH 1H 181J-T | B | 165.3/27.6 |
| C542 | 4030007060 | S.CER C1608 CH 1H 270J-T | B | 162.5/27.7 |
| C543 | 4030010760 | S.CER C1608 CH 1H 331J-T | B | 168.3/28.8 |
| C544 | 4030007090 | S.CER C1608 CH 1H 470J-T | B | 168.3/30.6 |
| C545 | 4030007160 | S.CER C1608 CH 1H 181J-T | B | 162.9/34.2 |
| C546 | 4030007060 | S.CER C1608 CH 1H 270J-T | B | 164.9/34.1 |
| C547 | 4030010760 | S.CER C1608 CH 1H 331J-T | B | 168.1/35.1 |
| C548 | 4030007140 | S.CER C1608 CH 1H 121J-T | B | 168.1/36.7 |
| C549 | 4030017810 | S.CER C1608 CH 1H 102J-T | B | 170.3/43.4 |
| C550 | 4030017810 | S.CER C1608 CH 1H 102J-T | B | 170.3/45.9 |
| C561 | 4030006880 | S.CER C1608 JB 1H 472K-T | B | 153/8 |
| C562 | 4030006880 | S.CER C1608 JB 1H 472K-T | B | 153/11.9 |
| C563 | 4030006880 | S.CER C1608 JB 1H 472K-T | B | 152/10 |
| C564 | 4030006880 | S.CER C1608 JB 1H 472K-T | T | 161.4/46.3 |
| C565 | 4030006880 | S.CER C1608 JB 1H 472K-T | B | 162.2/38.8 |
| C566 | 4030006880 | S.CER C1608 JB 1H 472K-T | T | 165.5/42.4 |
| C567 | 4030017800 | S.CER C1608 CH 1H 561J-T | B | 147.9/17.4 |
| C568 | 4030010760 | S.CER C1608 CH 1H 331J-T | B | 148.5/15.2 |
| C569 | 4030010760 | S.CER C1608 CH 1H 331J-T | B | 144.6/25.7 |
| C570 | 4030007080 | S.CER C1608 CH 1H 390J-T | B | 144.6/27.4 |
| C571 | 4030007100 | S.CER C1608 CH 1H 560J-T | B | 141.6/28.1 |
| C572 | 4030010760 | S.CER C1608 CH 1H 331J-T | B | 139.8/28.1 |
| C573 | 4030010760 | S.CER C1608 CH 1H 331J-T | B | 144.3/34.2 |
| C574 | 4030007090 | S.CER C1608 CH 1H 470J-T | B | 144.3/35.7 |
| C575 | 4030010760 | S.CER C1608 CH 1H 331J-T | B | 141.5/38.6 |
| C576 | 4030007100 | S.CER C1608 CH 1H 560J-T | B | 139.8/38.6 |
| C577 | 4030010760 | S.CER C1608 CH 1H 331J-T | B | 144.3/43.2 |
| C578 | 4030007080 | S.CER C1608 CH 1H 390J-T | B | 144.3/40.9 |
| C579 | 4030017800 | S.CER C1608 CH 1H 561J-T | B | 149.7/45.2 |
| C580 | 4030010760 | S.CER C1608 CH 1H 331J-T | B | 147.9/45.2 |
| C591 | 4030006880 | S.CER C1608 JB 1H 472K-T | B | 140.2/5.1 |
| C592 | 4030006880 | S.CER C1608 JB 1H 472K-T | B | 142.2/5.1 |
| C593 | 4030006880 | S.CER C1608 JB 1H 472K-T | B | 133/8.5 |
| C594 | 4030006880 | S.CER C1608 JB 1H 472K-T | B | 140.4/54.3 |
| C595 | 4030006880 | S.CER C1608 JB 1H 472K-T | B | 148.6/52.7 |
| C596 | 4030006880 | S.CER C1608 JB 1H 472K-T | B | 146/53.4 |
| C597 | 4030017800 | S.CER C1608 CH 1H 561J-T | B | 126.7/3.2 |
| C598 | 4030011330 | S.CER C1608 CH 1H 391J-T | B | 126.7/5.4 |
| C599 | 4030007160 | S.CER C1608 CH 1H 181J-T | B | 126.7/15.1 |
| C600 | 4030007070 | S.CER C1608 CH 1H 330J-T | B | 126.7/17.3 |
| C601 | 4030007030 | S.CER C1608 CH 1H 150J-T | B | 129.6/18.2 |
| C602 | 4030007120 | S.CER C1608 CH 1H 820J-T | B | 131.6/18.2 |
| C603 | 4030007140 | S.CER C1608 CH 1H 121J-T | B | 126.8/20.5 |
| C604 | 4030007100 | S.CER C1608 CH 1H 560J-T | B | 126.8/18.9 |
| C605 | 4030007120 | S.CER C1608 CH 1H 820J-T | B | 131.4/26.8 |
| C606 | 4030007030 | S.CER C1608 CH 1H 150J-T | B | 129.6/26.8 |
| C607 | 4030007160 | S.CER C1608 CH 1H 181J-T | B | 127.3/29 |
| C608 | 4030007070 | S.CER C1608 CH 1H 330J-T | B | 127.3/31.3 |
| C609 | 4030017800 | S.CER C1608 CH 1H 561J-T | B | 127.3/33.3 |
| C610 | 4030011330 | S.CER C1608 CH 1H 391J-T | B | 127.3/35.5 |
| C621 | 4030006880 | S.CER C1608 JB 1H 472K-T | B | 118.5/4.7 |
| C622 | 4030006880 | S.CER C1608 JB 1H 472K-T | B | 121.2/4 |
| C623 | 4030006880 | S.CER C1608 JB 1H 472K-T | B | 113.8/8.2 |
| C624 | 4030006880 | S.CER C1608 JB 1H 472K-T | T | 110.3/54.1 |
| C625 | 4030006880 | S.CER C1608 JB 1H 472K-T | B | 107.4/51.4 |
| C626 | 4030006880 | S.CER C1608 JB 1H 472K-T | T | 109/52.6 |
| C627 | 4030010760 | S.CER C1608 CH 1H 331J-T | B | 109.3/17.8 |
| C628 | 4030007150 | S.CER C1608 CH 1H 151J-T | B | 109.3/19.7 |
| C629 | 4030007150 | S.CER C1608 CH 1H 151J-T | B | 109.2/21.7 |
| C630 | 4030007060 | S.CER C1608 CH 1H 270J-T | B | 109.2/23.6 |
| C631 | 4030007060 | S.CER C1608 CH 1H 270J-T | B | 105.2/25.8 |
| C632 | 4030007140 | S.CER C1608 CH 1H 121J-T | B | 106.9/25.8 |
| C633 | 4030007150 | S.CER C1608 CH 1H 151J-T | B | 109.3/33.9 |
| C634 | 4030007010 | S.CER C1608 CH 1H 100D-T | B | 109.3/31.7 |
| C635 | 4030007140 | S.CER C1608 CH 1H 121J-T | B | 108.5/37.9 |
| C636 | 4030007060 | S.CER C1608 CH 1H 270J-T | B | 105.9/37.9 |
| C637 | 4030007150 | S.CER C1608 CH 1H 151J-T | B | 109.3/40.4 |
| C638 | 4030007060 | S.CER C1608 CH 1H 270J-T | B | 109.3/42.2 |
| C639 | 4030010760 | S.CER C1608 CH 1H 331J-T | B | 110.2/46.5 |
| C640 | 4030007150 | S.CER C1608 CH 1H 151J-T | B | 110.2/48.5 |
| C651 | 4030006880 | S.CER C1608 JB 1H 472K-T | B | 105.1/7.8 |
| C652 | 4030006880 | S.CER C1608 JB 1H 472K-T | B | 105.1/4.1 |
| C653 | 4030006880 | S.CER C1608 JB 1H 472K-T | B | 103/10.2 |
| C654 | 4030006880 | S.CER C1608 JB 1H 472K-T | T | 90.4/54.2 |
| C655 | 4030006880 | S.CER C1608 JB 1H 472K-T | B | 92.1/46.9 |
| C656 | 4030006880 | S.CER C1608 JB 1H 472K-T | T | 93.5/49.6 |
| C657 | 4030007170 | S.CER C1608 CH 1H 221J-T | B | 92.2/6 |
| C658 | 4030007170 | S.CER C1608 CH 1H 221J-T | B | 92.2/4.4 |
| C659 | 4030007130 | S.CER C1608 CH 1H 101J-T | B | 92.5/14.8 |
| C660 | 4030007050 | S.CER C1608 CH 1H 220J-T | B | 92.5/17 |
| C661 | 4030007070 | S.CER C1608 CH 1H 330J-T | B | 95.2/19.6 |
| C662 | 4030007080 | S.CER C1608 CH 1H 390J-T | B | 93.2/19.6 |
| C663 | 4030007120 | S.CER C1608 CH 1H 820J-T | B | 92.6/27.6 |
| C664 | 4030007050 | S.CER C1608 CH 1H 220J-T | B | 92.6/25.4 |
| C665 | 4030007080 | S.CER C1608 CH 1H 390J-T | B | 95.7/28.3 |
| C666 | 4030007070 | S.CER C1608 CH 1H 330J-T | B | 97.5/28.3 |
| C667 | 4030007130 | S.CER C1608 CH 1H 101J-T | B | 92.2/29.9 |
| C668 | 4030007050 | S.CER C1608 CH 1H 220J-T | B | 92.2/31.8 |

## [BPF UNIT]

| REF NO. | PARTS NO. | DESCRIPTION | M. | H/V LOCATION |
|---|---|---|---|---|
| C669 | 4030007170 | S.CER C1608 CH 1H 221J-T | B | 92.2/33.5 |
| C670 | 4030007170 | S.CER C1608 CH 1H 221J-T | B | 92.2/35.6 |
| C681 | 4030006880 | S.CER C1608 JB 1H 472K-T | B | 74.4/5.1 |
| C682 | 4030006880 | S.CER C1608 JB 1H 472K-T | B | 77.1/3.1 |
| C683 | 4030006880 | S.CER C1608 JB 1H 472K-T | B | 71.5/8.1 |
| C684 | 4030006880 | S.CER C1608 JB 1H 472K-T | T | 78.9/54.1 |
| C685 | 4030006880 | S.CER C1608 JB 1H 472K-T | B | 79.1/46.9 |
| C686 | 4030006880 | S.CER C1608 JB 1H 472K-T | B | 81.6/44 |
| C687 | 4030007170 | S.CER C1608 CH 1H 221J-T | B | 75.5/11 |
| C688 | 4030007110 | S.CER C1608 CH 1H 680J-T | B | 75.5/13.4 |
| C689 | 4030007090 | S.CER C1608 CH 1H 470J-T | B | 70.8/15.2 |
| C690 | 4030007090 | S.CER C1608 CH 1H 470J-T | B | 73/15.2 |
| C691 | 4030007070 | S.CER C1608 CH 1H 330J-T | B | 71/18.7 |
| C692 | 4030007070 | S.CER C1608 CH 1H 330J-T | B | 73/18.7 |
| C693 | 4030007120 | S.CER C1608 CH 1H 820J-T | B | 75.7/21.1 |
| C695 | 4030007070 | S.CER C1608 CH 1H 330J-T | B | 72.6/27 |
| C696 | 4030007070 | S.CER C1608 CH 1H 330J-T | B | 70.9/27 |
| C697 | 4030007090 | S.CER C1608 CH 1H 470J-T | B | 75.6/29.6 |
| C698 | 4030007090 | S.CER C1608 CH 1H 470J-T | B | 75.6/31.7 |
| C699 | 4030007170 | S.CER C1608 CH 1H 221J-T | B | 75.6/35.8 |
| C700 | 4030007110 | S.CER C1608 CH 1H 680J-T | B | 75.6/33.9 |
| C711 | 4030006880 | S.CER C1608 JB 1H 472K-T | B | 62/5.2 |
| C712 | 4030006880 | S.CER C1608 JB 1H 472K-T | B | 63/7.9 |
| C713 | 4030006880 | S.CER C1608 JB 1H 472K-T | B | 58.6/8.3 |
| C714 | 4030006880 | S.CER C1608 JB 1H 472K-T | T | 68.2/54.2 |
| C715 | 4030006880 | S.CER C1608 JB 1H 472K-T | B | 68.4/42.7 |
| C716 | 4030006880 | S.CER C1608 JB 1H 472K-T | B | 70/46.3 |
| C717 | 4030007160 | S.CER C1608 CH 1H 181J-T | B | 57.7/20.1 |
| C718 | 4030007090 | S.CER C1608 CH 1H 470J-T | B | 57.7/17.6 |
| C719 | 4030007090 | S.CER C1608 CH 1H 470J-T | B | 57.4/23.2 |
| C720 | 4030007040 | S.CER C1608 CH 1H 180J-T | B | 57.4/25.2 |
| C721 | 4030007030 | S.CER C1608 CH 1H 150J-T | B | 61/27 |
| C722 | 4030007050 | S.CER C1608 CH 1H 220J-T | B | 63.2/27 |
| C723 | 4030007090 | S.CER C1608 CH 1H 470J-T | B | 57.7/33.7 |
| C724 | 4030006990 | S.CER C1608 CH 1H 080D-T | B | 57.7/31.6 |
| C725 | 4030007050 | S.CER C1608 CH 1H 220J-T | B | 63.3/37.6 |
| C726 | 4030007030 | S.CER C1608 CH 1H 150J-T | B | 61.3/37.6 |
| C727 | 4030007090 | S.CER C1608 CH 1H 470J-T | B | 57.7/38.3 |
| C728 | 4030007040 | S.CER C1608 CH 1H 180J-T | B | 57.7/40.6 |
| C729 | 4030007160 | S.CER C1608 CH 1H 181J-T | B | 57.7/46.2 |
| C730 | 4030007090 | S.CER C1608 CH 1H 470J-T | B | 57.7/48.6 |
| C741 | 4030006880 | S.CER C1608 JB 1H 472K-T | B | 40.8/5.4 |
| C742 | 4030006880 | S.CER C1608 JB 1H 472K-T | B | 42.7/3.4 |
| C743 | 4030006880 | S.CER C1608 JB 1H 472K-T | B | 37/8 |
| C744 | 4030006880 | S.CER C1608 JB 1H 472K-T | T | 46.2/54.2 |
| C745 | 4030006880 | S.CER C1608 JB 1H 472K-T | T | 46.2/46.6 |
| C746 | 4030006880 | S.CER C1608 JB 1H 472K-T | B | 49.5/50.4 |
| C747 | 4030007140 | S.CER C1608 CH 1H 121J-T | B | 41.2/13.3 |
| C748 | 4030007040 | S.CER C1608 CH 1H 180J-T | B | 41.2/10.8 |
| C749 | 4030007070 | S.CER C1608 CH 1H 330J-T | B | 41/18.4 |
| C750 | 4030007040 | S.CER C1608 CH 1H 180J-T | B | 41/16.4 |
| C751 | 4030007010 | S.CER C1608 CH 1H 100D-T | B | 35.3/17.1 |
| C752 | 4030007070 | S.CER C1608 CH 1H 330J-T | B | 37.5/17.1 |
| C753 | 4030007090 | S.CER C1608 CH 1H 470J-T | B | 41/20.3 |
| C755 | 4030007070 | S.CER C1608 CH 1H 330J-T | B | 35.4/25.5 |
| C756 | 4030007010 | S.CER C1608 CH 1H 100D-T | B | 37.5/25.5 |
| C757 | 4030007070 | S.CER C1608 CH 1H 330J-T | B | 41/27.5 |
| C758 | 4030007040 | S.CER C1608 CH 1H 180J-T | B | 41.1/29.4 |
| C759 | 4030007140 | S.CER C1608 CH 1H 121J-T | B | 41.2/32.6 |
| C760 | 4030007040 | S.CER C1608 CH 1H 180J-T | B | 41.2/34.9 |
| C771 | 4030006880 | S.CER C1608 JB 1H 472K-T | B | 27.6/5.5 |
| C772 | 4030006880 | S.CER C1608 JB 1H 472K-T | B | 29.2/8.5 |
| C773 | 4030006880 | S.CER C1608 JB 1H 472K-T | B | 23.5/8.2 |
| C774 | 4030006880 | S.CER C1608 JB 1H 472K-T | T | 35.9/54.4 |
| C775 | 4030006880 | S.CER C1608 JB 1H 472K-T | B | 34.2/44.5 |
| C776 | 4030006880 | S.CER C1608 JB 1H 472K-T | B | 36.4/46.1 |
| C777 | 4030007130 | S.CER C1608 CH 1H 101J-T | B | 24.1/20 |
| C778 | 4030007030 | S.CER C1608 CH 1H 150J-T | B | 24.1/17.9 |
| C779 | 4030007050 | S.CER C1608 CH 1H 220J-T | B | 24/23.6 |
| C780 | 4030007020 | S.CER C1608 CH 1H 120J-T | B | 23.9/25.6 |
| C781 | 4030007050 | S.CER C1608 CH 1H 220J-T | B | 27.5/26.4 |
| C783 | 4030007050 | S.CER C1608 CH 1H 220J-T | B | 24.2/32.3 |
| C784 | 4030006980 | S.CER C1608 CH 1H 070D-T | B | 24.2/34.3 |
| C785 | 4030007050 | S.CER C1608 CH 1H 220J-T | B | 27.8/37.7 |
| C787 | 4030007050 | S.CER C1608 CH 1H 220J-T | B | 24.5/38.5 |
| C788 | 4030007020 | S.CER C1608 CH 1H 120J-T | B | 24.5/40.7 |
| C789 | 4030007130 | S.CER C1608 CH 1H 101J-T | B | 24/46.8 |
| C790 | 4030007030 | S.CER C1608 CH 1H 150J-T | B | 24.1/49.1 |
| C801 | 4030006880 | S.CER C1608 JB 1H 472K-T | B | 218.8/46.3 |
| C802 | 4030006880 | S.CER C1608 JB 1H 472K-T | B | 223/44.4 |
| C803 | 4030006880 | S.CER C1608 JB 1H 472K-T | B | 211.6/44.7 |
| C804 | 4030006880 | S.CER C1608 JB 1H 472K-T | B | 208.8/27.5 |
| C805 | 4030006880 | S.CER C1608 JB 1H 472K-T | B | 208.3/43.7 |
| C806 | 4030006880 | S.CER C1608 JB 1H 472K-T | B | 203.8/46.1 |
| C813 | 4030007150 | S.CER C1608 CH 1H 151J-T | T | 212.6/41.2 |
| C816 | 4030007030 | S.CER C1608 CH 1H 150J-T | T | 213.7/39.1 |
| C820 | 4030007130 | S.CER C1608 CH 1H 101J-T | T | 211.3/39.8 |
| C821 | 4030007040 | S.CER C1608 CH 1H 180J-T | T | 208/39.8 |
| C831 | 4030006880 | S.CER C1608 JB 1H 472K-T | T | 218.9/22.1 |
| C832 | 4030006880 | S.CER C1608 JB 1H 472K-T | T | 218.9/20.8 |
| C833 | 4030006880 | S.CER C1608 JB 1H 472K-T | B | 214.5/27.5 |
| C834 | 4030006880 | S.CER C1608 JB 1H 472K-T | B | 209.8/46.9 |
| C835 | 4030006880 | S.CER C1608 JB 1H 472K-T | T | 201/20.7 |
| C836 | 4030006880 | S.CER C1608 JB 1H 472K-T | T | 203.7/20.7 |
| C837 | 4030007100 | S.CER C1608 CH 1H 560J-T | T | 212/30 |
| C839 | 4030007110 | S.CER C1608 CH 1H 680J-T | T | 207.9/30 |
| C841 | 4030007100 | S.CER C1608 CH 1H 560J-T | T | 208.7/25.1 |
| C853 | 4030006880 | S.CER C1608 JB 1H 472K-T | B | 188.8/25.1 |
| C854 | 4030006880 | S.CER C1608 JB 1H 472K-T | B | 189.5/27.6 |
| C855 | 4030006880 | S.CER C1608 JB 1H 472K-T | T | 189/25.3 |
| C856 | 4030006880 | S.CER C1608 JB 1H 472K-T | B | 189.5/30.5 |
| C857 | 4030006880 | S.CER C1608 JB 1H 472K-T | T | 189/30.5 |
| C858 | 4030006880 | S.CER C1608 JB 1H 472K-T | B | 189.5/33.8 |
| C859 | 4030006880 | S.CER C1608 JB 1H 472K-T | T | 189/36.7 |
| C860 | 4030006880 | S.CER C1608 JB 1H 472K-T | B | 189.5/37.2 |

M.=Mounted side (T: Mounted on the Top side, B: Mounted on the Bottom side)
S.=Surface mount

## [BPF UNIT]

| REF NO. | PARTS NO. | DESCRIPTION | M. | H/V LOCATION |
|---|---|---|---|---|
| C861 | 4030006880 | S.CER C1608 JB 1H 472K-T | B | 189.5/40 |
| C862 | 4030006880 | S.CER C1608 JB 1H 472K-T | T | 189/42.9 |
| C863 | 4030006880 | S.CER C1608 JB 1H 472K-T | B | 189.5/42.9 |
| C864 | 4030006880 | S.CER C1608 JB 1H 472K-T | B | 189.5/45.8 |
| C865 | 4030006880 | S.CER C1608 JB 1H 472K-T | T | 194/50.2 |
| C876 | 4030006880 | S.CER C1608 JB 1H 472K-T | B | 241.3/19.5 |
| C878 | 4030010760 | S.CER C1608 CH 1H 331J-T | B | 245.1/17.9 |
| C879 | 4030007050 | S.CER C1608 CH 1H 220J-T | B | 245.1/19.5 |
| C880 | 4030009520 | S.CER C1608 CH 1H 020B-T | B | 247.9/19.5 |
| C881 | 4030010210 | S.CER C3216 JB 1C 105M-T | B | 244/34 |
| C900 | 4030006880 | S.CER C1608 JB 1H 472K-T | B | 215.5/99.5 |
| C901 | 4030005110 | S.CER C2012 JB 1E 473K-T | T | 15.1/26.8 |
| C902 | 4510008520 | S.ELE EEE1CA470SP | T | 12.3/21.7 |
| C903 | 4030005110 | S.CER C2012 JB 1E 473K-T | B | 12.3/12.9 |
| C904 | 4510009150 | S.ELE EEE1EA470WP | T | 12.3/13.4 |
| C905 | 4030006880 | S.CER C1608 JB 1H 472K-T | B | 244.7/94 |
| C906 | 4030006880 | S.CER C1608 JB 1H 472K-T | B | 244.7/91.2 |
| C907 | 4030006900 | S.CER C1608 JB 1H 103K-T | B | 213.8/106.2 |
| C908 | 4030011600 | S.CER C1608 JB 1E 104K-T | B | 212.8/115.6 |
| C909 | 4030006880 | S.CER C1608 JB 1H 472K-T | B | 218.7/113.5 |
| C910 | 4030006900 | S.CER C1608 JB 1H 103K-T | B | 215.5/117.9 |
| C911 | 4030006900 | S.CER C1608 JB 1H 103K-T | B | 210.6/106.3 |
| C912 | 4030006880 | S.CER C1608 JB 1H 472K-T | B | 201.9/99.6 |
| C914 | 4030006880 | S.CER C1608 JB 1H 472K-T | B | 194.7/99.4 |
| C915 | 4030006900 | S.CER C1608 JB 1H 103K-T | B | 192.6/110.6 |
| C916 | 4030006880 | S.CER C1608 JB 1H 472K-T | T | 200.3/118.3 |
| C917 | 4030006900 | S.CER C1608 JB 1H 103K-T | T | 197.8/117.6 |
| C918 | 4030006900 | S.CER C1608 JB 1H 103K-T | B | 187.3/106.3 |
| C919 | 4030006880 | S.CER C1608 JB 1H 472K-T | B | 180/99.9 |
| C921 | 4030006880 | S.CER C1608 JB 1H 472K-T | T | 201.6/118.3 |
| C922 | 4030011600 | S.CER C1608 JB 1E 104K-T | T | 208.5/117.4 |
| C923 | 4030011600 | S.CER C1608 JB 1E 104K-T | T | 212.3/117.4 |
| C924 | 4030011600 | S.CER C1608 JB 1E 104K-T | B | 192.9/116.4 |
| C925 | 4030011600 | S.CER C1608 JB 1E 104K-T | T | 187.7/117.4 |
| C926 | 4030011600 | S.CER C1608 JB 1E 104K-T | T | 191.6/117.5 |
| C927 | 4030006960 | S.CER C1608 CH 1H 050C-T | B | 209.4/113.7 |
| C928 | 4030006960 | S.CER C1608 CH 1H 050C-T | B | 187.5/114.2 |
| C950 | 4030006880 | S.CER C1608 JB 1H 472K-T | B | 206.3/4.6 |
| C951 | 4030006900 | S.CER C1608 JB 1H 103K-T | B | 215.7/17.8 |
| C952 | 4030011600 | S.CER C1608 JB 1E 104K-T | B | 211.9/20 |
| C953 | 4030006880 | S.CER C1608 JB 1H 472K-T | B | 205.3/2.8 |
| C954 | 4030006900 | S.CER C1608 JB 1H 103K-T | B | 218.6/2.5 |
| C955 | 4030006900 | S.CER C1608 JB 1H 103K-T | B | 208.6/11.4 |
| C956 | 4030006880 | S.CER C1608 JB 1H 472K-T | T | 203.5/2.3 |
| C958 | 4030006880 | S.CER C1608 JB 1H 472K-T | B | 190/4.9 |
| C959 | 4030006900 | S.CER C1608 JB 1H 103K-T | B | 195.2/16.5 |
| C960 | 4030006880 | S.CER C1608 JB 1H 472K-T | B | 196.3/2.3 |
| C961 | 4030006900 | S.CER C1608 JB 1H 103K-T | B | 202.2/4 |
| C962 | 4030006900 | S.CER C1608 JB 1H 103K-T | B | 184/16.5 |
| C963 | 4030006880 | S.CER C1608 JB 1H 472K-T | B | 181/3.9 |
| C965 | 4030006880 | S.CER C1608 JB 1H 472K-T | T | 208.4/3.9 |
| C967 | 4030011600 | S.CER C1608 JB 1E 104K-T | T | 209/21.4 |
| C968 | 4030011600 | S.CER C1608 JB 1E 104K-T | T | 213/21.4 |
| C969 | 4030011600 | S.CER C1608 JB 1E 104K-T | B | 191.6/19.9 |
| C970 | 4030011600 | S.CER C1608 JB 1E 104K-T | T | 187.9/21.4 |
| C971 | 4030011600 | S.CER C1608 JB 1E 104K-T | T | 193/19.8 |
| C972 | 4030006960 | S.CER C1608 CH 1H 050C-T | B | 208.3/19.3 |
| C973 | 4030006960 | S.CER C1608 CH 1H 050C-T | B | 187.7/19.3 |
| C974 | 4030006880 | S.CER C1608 JB 1H 472K-T | B | 235.8/11.5 |
| | | | | |
| RL1 | 6330001750 | RLY FTR-B4CA012Z | | |
| RL2 | 6330001750 | RLY FTR-B4CA012Z | | |
| RL21 | 6330001750 | RLY FTR-B4CA012Z | | |
| RL22 | 6330001750 | RLY FTR-B4CA012Z | | |
| RL51 | 6330001750 | RLY FTR-B4CA012Z | | |
| RL52 | 6330001750 | RLY FTR-B4CA012Z | | |
| RL81 | 6330001750 | RLY FTR-B4CA012Z | | |
| RL82 | 6330001750 | RLY FTR-B4CA012Z | | |
| RL111 | 6330001750 | RLY FTR-B4CA012Z | | |
| RL112 | 6330001750 | RLY FTR-B4CA012Z | | |
| RL141 | 6330001750 | RLY FTR-B4CA012Z | | |
| RL142 | 6330001750 | RLY FTR-B4CA012Z | | |
| RL171 | 6330001750 | RLY FTR-B4CA012Z | | |
| RL172 | 6330001750 | RLY FTR-B4CA012Z | | |
| RL201 | 6330001750 | RLY FTR-B4CA012Z | | |
| RL202 | 6330001750 | RLY FTR-B4CA012Z | | |
| RL231 | 6330001750 | RLY FTR-B4CA012Z | | |
| RL232 | 6330001750 | RLY FTR-B4CA012Z | | |
| RL261 | 6330001750 | RLY FTR-B4CA012Z | | |
| RL262 | 6330001750 | RLY FTR-B4CA012Z | | |
| RL291 | 6330001750 | RLY FTR-B4CA012Z | | |
| RL292 | 6330001750 | RLY FTR-B4CA012Z | | |
| RL321 | 6330001750 | RLY FTR-B4CA012Z | | |
| RL322 | 6330001750 | RLY FTR-B4CA012Z | | |
| RL351 | 6330001750 | RLY FTR-B4CA012Z | | |
| RL352 | 6330001750 | RLY FTR-B4CA012Z | | |
| RL353 | 6330001750 | RLY FTR-B4CA012Z | | |
| RL354 | 6330001750 | RLY FTR-B4CA012Z | | |
| RL355 | 6330001750 | RLY FTR-B4CA012Z | | |
| RL371 | 6330001750 | RLY FTR-B4CA012Z | | |
| RL381 | 6330001770 | RLY SIP-1A-12Y | | |
| RL401 | 6330001770 | RLY SIP-1A-12Y | | |
| RL402 | 6330001750 | RLY FTR-B4CA012Z | | |
| RL501 | 6330001750 | RLY FTR-B4CA012Z | | |
| RL502 | 6330001750 | RLY FTR-B4CA012Z | | |
| RL531 | 6330001750 | RLY FTR-B4CA012Z | | |
| RL532 | 6330001750 | RLY FTR-B4CA012Z | | |
| RL561 | 6330001750 | RLY FTR-B4CA012Z | | |
| RL562 | 6330001750 | RLY FTR-B4CA012Z | | |
| RL591 | 6330001750 | RLY FTR-B4CA012Z | | |
| RL592 | 6330001750 | RLY FTR-B4CA012Z | | |
| RL621 | 6330001750 | RLY FTR-B4CA012Z | | |
| RL622 | 6330001750 | RLY FTR-B4CA012Z | | |
| RL651 | 6330001750 | RLY FTR-B4CA012Z | | |

## [BPF UNIT]

| REF NO. | PARTS NO. | DESCRIPTION | M. | H/V LOCATION |
|---|---|---|---|---|
| RL652 | 6330001750 | RLY FTR-B4CA012Z | | |
| RL681 | 6330001750 | RLY FTR-B4CA012Z | | |
| RL682 | 6330001750 | RLY FTR-B4CA012Z | | |
| RL711 | 6330001750 | RLY FTR-B4CA012Z | | |
| RL712 | 6330001750 | RLY FTR-B4CA012Z | | |
| RL741 | 6330001750 | RLY FTR-B4CA012Z | | |
| RL742 | 6330001750 | RLY FTR-B4CA012Z | | |
| RL771 | 6330001750 | RLY FTR-B4CA012Z | | |
| RL772 | 6330001750 | RLY FTR-B4CA012Z | | |
| RL801 | 6330001750 | RLY FTR-B4CA012Z | | |
| RL802 | 6330001750 | RLY FTR-B4CA012Z | | |
| RL831 | 6330001750 | RLY FTR-B4CA012Z | | |
| RL832 | 6330001750 | RLY FTR-B4CA012Z | | |
| RL851 | 6330001750 | RLY FTR-B4CA012Z | | |
| RL852 | 6330001750 | RLY FTR-B4CA012Z | | |
| RL853 | 6330001750 | RLY FTR-B4CA012Z | | |
| RL854 | 6330001750 | RLY FTR-B4CA012Z | | |
| RL855 | 6330001750 | RLY FTR-B4CA012Z | | |
| RL871 | 6330001770 | RLY SIP-1A-12Y | | |
| RL900 | 6330001750 | RLY FTR-B4CA012Z | | |
| RL901 | 6330001750 | RLY FTR-B4CA012Z | | |
| RL902 | 6330001750 | RLY FTR-B4CA012Z | | |
| RL903 | 6330001750 | RLY FTR-B4CA012Z | | |
| RL950 | 6330001750 | RLY FTR-B4CA012Z | | |
| RL951 | 6330001750 | RLY FTR-B4CA012Z | | |
| RL952 | 6330001750 | RLY FTR-B4CA012Z | | |
| RL953 | 6330001750 | RLY FTR-B4CA012Z | | |
| RL954 | 6330001750 | RLY FTR-B4CA012Z | | |
| | | | | |
| J1 | 6510020521 | S.CNR 52808-1271 (1290) | T | 6/17 |
| J101 | 6510007020 | CNR TMP-J01X-V6 | | |
| J102 | 6510007020 | CNR TMP-J01X-V6 | | |
| J103 | 6510023750 | CNR 01K1971-10 | | |
| J104 | 6510023750 | CNR 01K1971-10 | | |
| J105 | 6510023750 | CNR 01K1971-10 | | |
| J106 | 6510007020 | CNR TMP-J01X-V6 | | |
| J107 | 6510007020 | CNR TMP-J01X-V6 | | |
| J108 | 6510007020 | CNR TMP-J01X-V6 | | |
| J504 | 6510023750 | CNR 01K1971-10 | | |
| J505 | 6510023750 | CNR 01K1971-10 | | |
| J506 | 6510007020 | CNR TMP-J01X-V6 | | |
| J601 | 6510007020 | CNR TMP-J01X-V6 | | |
| J602 | 6510007020 | CNR TMP-J01X-V6 | | |
| | | | | |
| EP900 | 6910012350 | S.BEA MMZ1608Y 102BT | B | 218.9/98.8 |
| EP901 | 6910012350 | S.BEA MMZ1608Y 102BT | B | 204.2/100.3 |
| EP902 | 6910012350 | S.BEA MMZ1608Y 102BT | B | 197.2/98.7 |
| EP903 | 6910012350 | S.BEA MMZ1608Y 102BT | B | 189.7/100.1 |
| EP950 | 6910012350 | S.BEA MMZ1608Y 102BT | B | 208.8/3.5 |
| EP951 | 6910012350 | S.BEA MMZ1608Y 102BT | T | 205.4/3.2 |
| EP952 | 6910012350 | S.BEA MMZ1608Y 102BT | B | 193.3/3 |
| EP953 | 6910012350 | S.BEA MMZ1608Y 102BT | B | 184.6/3.8 |

M.=Mounted side (T: Mounted on the Top side, B: Mounted on the Bottom side)
S.=Surface mount

## [MAIN UNIT]

| REF NO. | PARTS NO. | DESCRIPTION | | M. | H/V LOCATION |
|---|---|---|---|---|---|
| IC1 | 1110003870 | S.IC | NJM2058M-TE1 | T | 226/83.5 |
| IC2 | 1110001901 | S.IC | uPC4570G2-E1-A | T | 187/68.8 |
| IC3 | 1130005641 | S.IC | TC4W53F (TE12L,F) | T | 191.1/75.2 |
| IC4 | 1110006300 | S.IC | NJM2172V-TE1 | T | 186.6/85.7 |
| IC5 | 1130005641 | S.IC | TC4W53F (TE12L,F) | T | 184.3/75.2 |
| IC50 | 1190001930 | S.IC | PS7122AL-1A-E3 | B | 114.4/109.1 |
| IC60 | 1110003870 | S.IC | NJM2058M-TE1 | B | 116.1/87.4 |
| IC61 | 1110003870 | S.IC | NJM2058M-TE1 | B | 129.6/94.8 |
| IC100 | 1130005641 | S.IC | TC4W53F (TE12L,F) | T | 211.8/91 |
| IC101 | 1130005641 | S.IC | TC4W53F (TE12L,F) | T | 205/91 |
| IC102 | 1110001901 | S.IC | uPC4570G2-E1-A | T | 209.7/68.5 |
| IC104 | 1110001901 | S.IC | uPC4570G2-E1-A | T | 209.8/43.4 |
| IC105 | 1110006300 | S.IC | NJM2172V-TE1 | T | 220.4/58.4 |
| IC140 | 1110006141 | IC | LA4485-E | | |
| IC180 | 1110006300 | S.IC | NJM2172V-TE1 | T | 187/57.6 |
| IC181 | 1130005641 | S.IC | TC4W53F (TE12L,F) | T | 186.9/40.3 |
| IC182 | 1110006160 | S.IC | TPA6111A2DGN | T | 186.8/35.8 |
| IC191 | 1130005641 | S.IC | TC4W53F (TE12L,F) | T | 193.3/30 |
| IC192 | 1130005641 | S.IC | TC4W53F (TE12L,F) | T | 180.6/30.2 |
| IC201 | 1130005641 | S.IC | TC4W53F (TE12L,F) | T | 147.7/71.6 |
| IC210 | 1110006300 | S.IC | NJM2172V-TE1 | T | 160.5/90.1 |
| IC230 | 1110001901 | S.IC | uPC4570G2-E1-A | T | 68.3/22.2 |
| IC250 | 1130011530 | S.IC | CD74HC4094M96 | T | 137.4/32.2 |
| IC251 | 1160000131 | S.IC | TD62783AFG (S,EL) | T | 125.7/34 |
| IC260 | 1130011530 | S.IC | CD74HC4094M96 | T | 137.4/46.6 |
| IC261 | 1160000131 | S.IC | TD62783AFG (S,EL) | T | 125.7/48.3 |
| IC290 | 1130011530 | S.IC | CD74HC4094M96 | T | 149.4/35.6 |
| IC291 | 1160000131 | S.IC | TD62783AFG (S,EL) | T | 161.1/34 |
| IC310 | 1130011530 | S.IC | CD74HC4094M96 | T | 149.4/50.1 |
| IC311 | 1160000131 | S.IC | TD62783AFG (S,EL) | T | 161.1/48.4 |
| IC330 | 1130012000 | S.IC | M62352AGP C60Q | T | 150.4/61 |
| IC331 | 1130012000 | S.IC | M62352AGP C60Q | T | 161.1/61.1 |
| IC450 | 1180002650 | S.REG | SI-3012KS-TL | B | 212.6/31.3 |
| IC451 | 1180002650 | S.REG | SI-3012KS-TL | B | 160/15.2 |
| IC452 | 1180002650 | S.REG | SI-3012KS-TL | B | 93.6/51.5 |
| IC460 | 1130005641 | S.IC | TC4W53F (TE12L,F) | T | 147.7/80 |
| IC490 | 1130005641 | S.IC | TC4W53F (TE12L,F) | B | 163.4/61.6 |
| IC491 | 1110003870 | S.IC | NJM2058M-TE1 | B | 236.2/21.9 |
| IC495 | 1130011990 | S.IC | SN74LVC1G08DCKR | T | 14.6/122.5 |
| IC501 | 1110006100 | S.IC | NJM5534MD-TE1 | T | 22.6/66.4 |
| IC502 | 1110006100 | S.IC | NJM5534MD-TE1 | T | 22.6/78.5 |
| IC503 | 1110005461 | S.IC | TA4107F (TE12L,F) | T | 23.2/91.9 |
| IC550 | 1180001771 | S.IC | TA79L05F (TE12L,F) | T | 125.5/103.1 |
| IC820 | 1110006131 | S.IC | uPC4094G2-E1-A | T | 83.5/59.3 |
| IC821 | 1110006300 | S.IC | NJM2172V-TE1 | T | 160.5/74.8 |
| | | | | | |
| Q1 | 1590001050 | S.TR | DTC114TUA T106 | B | 217/105.3 |
| Q2 | 1590001050 | S.TR | DTC114TUA T106 | B | 174.9/102.8 |
| Q3 | 1530002060 | S.TR | 2SC4081 T106 R | B | 161.8/96.7 |
| Q4 | 1530002060 | S.TR | 2SC4081 T106 R | B | 172.7/98 |
| Q5 | 1590001330 | S.TR | DTA114EUA T106 | B | 167.1/92 |
| Q6 | 1540000441 | S.TR | 2SD1619T-TD-E | B | 166.4/102.1 |
| Q7 | 1530002060 | S.TR | 2SC4081 T106 R | B | 147.8/110.4 |
| Q8 | 1530002060 | S.TR | 2SC4081 T106 R | T | 222.2/99.7 |
| Q9 | 1530002060 | S.TR | 2SC4081 T106 R | T | 179.3/101 |
| Q50 | 1590001050 | S.TR | DTC114TUA T106 | B | 119/96.6 |
| Q51 | 1590001050 | S.TR | DTC114TUA T106 | B | 118.6/100.4 |
| Q52 | 1530002060 | S.TR | 2SC4081 T106 R | T | 83.5/107.6 |
| Q60 | 1590002710 | S.TR | UMH11NTN | T | 118.7/87.6 |
| Q61 | 1590002150 | S.TR | DTC144TE TL | T | 117.8/80.2 |
| Q62 | 1510000510 | S.TR | 2SA1576A T106R | T | 123.1/93.8 |
| Q63 | 1590001050 | S.TR | DTC114TUA T106 | T | 120.2/79.9 |
| Q64 | 1590002430 | S.TR | DTA144EE TL | T | 120.2/82.2 |
| Q100 | 1590001451 | S.FET | 2SJ144-GR (TE85R,F) | T | 214.2/79.1 |
| Q101 | 1590001451 | S.FET | 2SJ144-GR (TE85R,F) | T | 204.6/79.1 |
| Q131 | 1560001131 | S.FET | CPH3403-TL-E | T | 228.6/70.9 |
| Q132 | 1560001131 | S.FET | CPH3403-TL-E | T | 233.4/47.7 |
| Q140 | 1540000471 | S.TR | 2SD1801S-TL-E | T | 241.8/37.3 |
| Q141 | 1590000680 | S.TR | DTC114EUA T106 | B | 247.8/92.4 |
| Q142 | 1590000680 | S.TR | DTC114EUA T106 | B | 239.9/92.4 |
| Q143 | 1590001050 | S.TR | DTC114TUA T106 | T | 255.3/55.4 |
| Q351 | 1560001260 | S.FET | 2SK3018 T106 | T | 129.8/85.1 |
| Q352 | 1530002060 | S.TR | 2SC4081 T106 R | T | 132.7/85.1 |
| Q474 | 1510000510 | S.TR | 2SA1576A T106R | T | 132.4/77.2 |
| Q476 | 1590001050 | S.TR | DTC114TUA T106 | T | 129.4/77.1 |
| Q490 | 1590000680 | S.TR | DTC114EUA T106 | B | 232.2/4.5 |
| Q491 | 1520000460 | S.TR | 2SB1132 T100 R | B | 224.3/4.2 |
| Q501 | 1580000751 | S.FET | 3SK294 (TE85L,F) | B | 26.9/91.8 |
| Q502 | 1590000680 | S.TR | DTC114EUA T106 | T | 47.1/79.4 |
| Q503 | 1590002710 | S.TR | UMH11NTN | T | 47.3/75.9 |
| Q504 | 1560000561 | S.FET | 2SK882-GR (TE85L,F) | B | 49.3/91.2 |
| Q506 | 1560000561 | S.FET | 2SK882-GR (TE85L,F) | B | 102.7/82.6 |
| Q507 | 1530003151 | S.TR | 2SC4673D-TD-E | T | 103.9/65.5 |
| Q508 | 1530003842 | S.TR | 2SC5501A-4-TR-E | T | 58.8/68.8 |
| Q801 | 1530003851 | S.TR | 2SC5551A-F-E | T | 43.1/18.2 |
| Q802 | 1520000531 | S.TR | 2SB1119S-TD-E | B | 89.9/83.7 |
| Q803 | 1590000680 | S.TR | DTC114EUA T106 | B | 83.7/84.8 |
| Q804 | 1590002710 | S.TR | UMH11NTN | T | 33.9/20.3 |
| Q805 | 1590000680 | S.TR | DTC114EUA T106 | T | 30.9/21.6 |
| Q806 | 1530002060 | S.TR | 2SC4081 T106 R | T | 35.5/73.8 |
| Q808 | 1590001330 | S.TR | DTA114EUA T106 | T | 45.6/70.2 |
| Q809 | 1590000680 | S.TR | DTC114EUA T106 | T | 48.7/70.2 |
| Q810 | 1530002060 | S.TR | 2SC4081 T106 R | T | 231.4/34.2 |
| | | | | | |
| D1 | 1750000550 | S.DIO | 1SS355 TE-17 | B | 162.9/104.2 |
| D2 | 1750000550 | S.DIO | 1SS355 TE-17 | B | 170.6/104.2 |
| D3 | 1790001750 | S.DIO | DSM3MA4 | B | 65.5/122.7 |
| D4 | 1790001750 | S.DIO | DSM3MA4 | B | 65.5/113.6 |
| D50 | 1750000550 | S.DIO | 1SS355 TE-17 | B | 114.5/100.6 |
| D51 | 1790001670 | S.DIO | RB706F-40T106 | T | 90.8/112.8 |
| D52 | 1750000550 | S.DIO | 1SS355 TE-17 | T | 88.4/112.8 |
| D60 | 1750000550 | S.DIO | 1SS355 TE-17 | B | 126.8/86.8 |
| D61 | 1750000550 | S.DIO | 1SS355 TE-17 | B | 126.6/83.4 |

## [MAIN UNIT]

| REF NO. | PARTS NO. | DESCRIPTION | | M. | H/V LOCATION |
|---|---|---|---|---|---|
| D62 | 1750000550 | S.DIO | 1SS355 TE-17 | B | 120.6/77.6 |
| D63 | 1750000550 | S.DIO | 1SS355 TE-17 | B | 116.5/93.6 |
| D64 | 1790001240 | S.DIO | MA2S7280G-(TX) | B | 108.1/78.3 |
| D65 | 1750000550 | S.DIO | 1SS355 TE-17 | B | 123.1/100.1 |
| D66 | 1750000550 | S.DIO | 1SS355 TE-17 | B | 134.3/89.4 |
| D67 | 1730002340 | S.ZEN | MA8047-M (TX) | B | 122.8/95.8 |
| D140 | 1750000550 | S.DIO | 1SS355 TE-17 | B | 247.8/95.1 |
| D141 | 1750000550 | S.DIO | 1SS355 TE-17 | B | 239.9/95.1 |
| D241 | 1730002280 | S.ZEN | MA8091-M (TX) | T | 231.2/32 |
| D351 | 1790001250 | S.DIO | MA2S1110G-(TX) | T | 129.7/83.2 |
| D450 | 1710000840 | S.DIO | 1SR154-400 TE25 | B | 218.9/28 |
| D451 | 1710000840 | S.DIO | 1SR154-400 TE25 | B | 153.4/16 |
| D452 | 1710000840 | S.DIO | 1SR154-400 TE25 | B | 93.6/58 |
| D490 | 1790000620 | S.DIO | MA77 (TX) | B | 237.5/5.4 |
| D501 | 1790000620 | S.DIO | MA77 (TX) | B | 34.3/94.1 |
| D502 | 1790000620 | S.DIO | MA77 (TX) | B | 34.3/91.8 |
| D503 | 1790000620 | S.DIO | MA77 (TX) | B | 46.6/91.4 |
| D504 | 1790000620 | S.DIO | MA77 (TX) | B | 46.7/85.3 |
| D505 | 1750000431 | S.DIO | HSB88WSTR-E | T | 70.2/90.8 |
| D506 | 1750000431 | S.DIO | HSB88WSTR-E | T | 84.3/69.4 |
| D601 | 1790000620 | S.DIO | MA77 (TX) | B | 34.7/54 |
| D602 | 1790000620 | S.DIO | MA77 (TX) | B | 34.7/33 |
| D603 | 1790000620 | S.DIO | MA77 (TX) | B | 45.5/54 |
| D604 | 1790000620 | S.DIO | MA77 (TX) | B | 45.5/33 |
| D605 | 1790000620 | S.DIO | MA77 (TX) | B | 56.3/54 |
| D606 | 1790000620 | S.DIO | MA77 (TX) | B | 56.3/33 |
| D607 | 1790000620 | S.DIO | MA77 (TX) | B | 67.1/54 |
| D608 | 1790000620 | S.DIO | MA77 (TX) | B | 67.1/33 |
| D609 | 1790000620 | S.DIO | MA77 (TX) | B | 78/54 |
| D610 | 1790000620 | S.DIO | MA77 (TX) | B | 78/33 |
| D611 | 1790000620 | S.DIO | MA77 (TX) | T | 40.8/54 |
| D612 | 1790000620 | S.DIO | MA77 (TX) | T | 40.8/33 |
| D613 | 1790000620 | S.DIO | MA77 (TX) | T | 48.7/54 |
| D614 | 1790000620 | S.DIO | MA77 (TX) | T | 49.8/33 |
| D615 | 1790000620 | S.DIO | MA77 (TX) | T | 58.9/54 |
| D616 | 1790000620 | S.DIO | MA77 (TX) | T | 58.8/33 |
| D617 | 1790000620 | S.DIO | MA77 (TX) | T | 67.8/54 |
| D618 | 1790000620 | S.DIO | MA77 (TX) | T | 67.8/33 |
| D619 | 1790000620 | S.DIO | MA77 (TX) | T | 76.8/54 |
| D620 | 1790000620 | S.DIO | MA77 (TX) | T | 76.8/33 |
| D801 | 1790000620 | S.DIO | MA77 (TX) | T | 36.5/29.9 |
| D802 | 1750000581 | S.DIO | 1SV307 (TPH3,F) | T | 34.7/29.9 |
| D806 | 1790000620 | S.DIO | MA77 (TX) | B | 84.2/76.6 |
| D820 | 1750000581 | S.DIO | 1SV307 (TPH3,F) | T | 86/33 |
| | | | | | |
| FI501 | 2020001070 | CER | CFWLA455KDFA-B0 (CFWS455D) | | |
| FI502 | 2020001510 | CER | CFWLA455KJFA-B0 (CFWS455IT) | | |
| FI503 | 2010002580 | S.FIL | FL-348 (64.455 MHz) | T | 93.4/90.8 |
| | | | | | |
| L1 | 6200003261 | S.COL | NLV32T-101J | B | 211.7/110.3 |
| L2 | 6200003261 | S.COL | NLV32T-101J | B | 222.2/110.3 |
| L3 | 6200003950 | S.COL | HF50ACC 322513-T | B | 204.7/110.3 |
| L4 | 6200003261 | S.COL | NLV32T-101J | T | 218.7/109.6 |
| L5 | 6200003261 | S.COL | NLV32T-101J | B | 225.7/110.3 |
| L6 | 6200003261 | S.COL | NLV32T-101J | B | 215.2/110.3 |
| L7 | 6200003950 | S.COL | HF50ACC 322513-T | T | 208.2/109.6 |
| L8 | 6200003261 | S.COL | NLV32T-101J | B | 200.4/110.3 |
| L9 | 6200003950 | S.COL | HF50ACC 322513-T | B | 193.4/110 |
| L10 | 6200003261 | S.COL | NLV32T-101J | B | 196.9/110.3 |
| L11 | 6200003261 | S.COL | NLV32T-101J | B | 169.7/110.3 |
| L12 | 6200003261 | S.COL | NLV32T-101J | B | 180.2/110.3 |
| L13 | 6200003950 | S.COL | HF50ACC 322513-T | B | 162.7/110.3 |
| L14 | 6200003261 | S.COL | NLV32T-101J | T | 176.7/109.7 |
| L15 | 6200003261 | S.COL | NLV32T-101J | B | 183.7/110.3 |
| L16 | 6200003261 | S.COL | NLV32T-101J | B | 173.2/110.3 |
| L17 | 6200003950 | S.COL | HF50ACC 322513-T | T | 166.2/109.2 |
| L18 | 6200003261 | S.COL | NLV32T-101J | B | 158.4/110.3 |
| L19 | 6200003950 | S.COL | HF50ACC 322513-T | B | 151.4/110 |
| L20 | 6200003261 | S.COL | NLV32T-101J | B | 154.9/110.3 |
| L21 | 6200003950 | S.COL | HF50ACC 322513-T | B | 211.7/124.6 |
| L22 | 6200003950 | S.COL | HF50ACC 322513-T | B | 169.7/124.5 |
| L31 | 6200003261 | S.COL | NLV32T-101J | B | 194.2/88.9 |
| L50 | 6200003261 | S.COL | NLV32T-101J | B | 139.6/122.6 |
| L51 | 6200003590 | S.COL | EXCCL3225U1 | B | 122.1/107.2 |
| L52 | 6200003261 | S.COL | NLV32T-101J | B | 77.2/122.3 |
| L53 | 6200003261 | S.COL | NLV32T-101J | B | 77.2/117.4 |
| L54 | 6200003261 | S.COL | NLV32T-101J | T | 85.8/112.8 |
| L55 | 6200003261 | S.COL | NLV32T-101J | B | 95.6/107.2 |
| L56 | 6200003590 | S.COL | EXCCL3225U1 | B | 63.9/107.4 |
| L80 | 6200009790 | S.COL | BLM31PG121SN1 | B | 53.4/118.4 |
| L140 | 6200003261 | S.COL | NLV32T-101J | T | 219.7/48.1 |
| L141 | 2040000490 | COL | EXC-ELDR25C | | |
| L142 | 2040000490 | COL | EXC-ELDR25C | | |
| L143 | 2040000490 | COL | EXC-ELDR25C | | |
| L180 | 6200003261 | S.COL | NLV32T-101J | T | 186.9/44.5 |
| L181 | 6200003261 | S.COL | NLV32T-101J | T | 181.2/40.1 |
| L201 | 6200003261 | S.COL | NLV32T-101J | T | 165/81.4 |
| L210 | 6200003261 | S.COL | NLV32T-101J | T | 156.1/85.2 |
| L250 | 6200003590 | S.COL | EXCCL3225U1 | T | 134.6/55.7 |
| L290 | 6200003590 | S.COL | EXCCL3225U1 | T | 152/28.2 |
| L330 | 6200001831 | S.COL | NLV32T-100J | B | 161.4/68.9 |
| L331 | 6200001831 | S.COL | NLV32T-100J | B | 164.8/68.9 |
| L340 | 6200003950 | S.COL | HF50ACC 322513-T | B | 201.7/96.1 |
| L341 | 6200003950 | S.COL | HF50ACC 322513-T | B | 195.5/96.1 |
| L360 | 6200003950 | S.COL | HF50ACC 322513-T | B | 149.7/96.1 |
| L361 | 6200003950 | S.COL | HF50ACC 322513-T | B | 143.5/96.1 |
| L380 | 6200003950 | S.COL | HF50ACC 322513-T | B | 28.5/41.9 |
| L381 | 6200003950 | S.COL | HF50ACC 322513-T | B | 28.5/48.1 |
| L400 | 6200003950 | S.COL | HF50ACC 322513-T | T | 238.3/10.9 |
| L401 | 6200003950 | S.COL | HF50ACC 322513-T | B | 234/11.2 |
| L402 | 6200003950 | S.COL | HF50ACC 322513-T | B | 237.3/11.2 |
| L405 | 6200003950 | S.COL | HF50ACC 322513-T | T | 40.3/11.3 |
| L406 | 6200003950 | S.COL | HF50ACC 322513-T | T | 34.3/11.3 |

M.=Mounted side (T: Mounted on the Top side, B: Mounted on the Bottom side)
S.=Surface mount

## [MAIN UNIT]

| REF NO. | PARTS NO. | DESCRIPTION | M. | H/V LOCATION |
|---|---|---|---|---|
| L407 | 6200003950 | S.COL HF50ACC 322513-T | T | 37.3/11.3 |
| L410 | 6200003590 | S.COL EXCCL3225U1 | T | 10.9/41 |
| L411 | 6200003950 | S.COL HF50ACC 322513-T | B | 10.9/39.6 |
| L412 | 6200003590 | S.COL EXCCL3225U1 | T | 10.9/38 |
| L413 | 6200003950 | S.COL HF50ACC 322513-T | B | 10.9/36.4 |
| L418 | 6200003950 | S.COL HF50ACC 322513-T | B | 11.1/97.2 |
| L435 | 6200003950 | S.COL HF50ACC 322513-T | B | 6.7/76.7 |
| L440 | 6200003950 | S.COL HF50ACC 322513-T | T | 164.1/12.7 |
| L441 | 6200003950 | S.COL HF50ACC 322513-T | T | 161.1/12.7 |
| L450 | 6200003590 | S.COL EXCCL3225U1 | B | 251.2/16.8 |
| L451 | 6170000150 | COL LW-16 | | |
| L452 | 6200003590 | S.COL EXCCL3225U1 | T | 250.2/25.4 |
| L453 | 6200003590 | S.COL EXCCL3225U1 | T | 250.2/28.4 |
| L454 | 6200009790 | S.COL BLM31PG121SN1 | B | 250.6/30.2 |
| L455 | 6200009790 | S.COL BLM31PG121SN1 | B | 250.6/32.5 |
| L456 | 6200003590 | S.COL EXCCL3225U1 | T | 250.4/39.6 |
| L480 | 6200003950 | S.COL HF50ACC 322513-T | B | 220.6/24 |
| L481 | 6200003950 | S.COL HF50ACC 322513-T | B | 149.8/17.1 |
| L482 | 6200003950 | S.COL HF50ACC 322513-T | B | 94.1/61.2 |
| L495 | 6200003191 | S.COL NLV32T-470J | B | 24.9/119.2 |
| L496 | 6200003191 | S.COL NLV32T-470J | B | 9.8/119 |
| L501 | 6200003261 | S.COL NLV32T-101J | T | 24.4/101.3 |
| L502 | 6200003261 | S.COL NLV32T-101J | T | 21.4/97.1 |
| L503 | 6200003261 | S.COL NLV32T-101J | T | 24.4/97.1 |
| L504 | 6200003520 | S.COL ELJFB 102K-F | T | 30.6/92.2 |
| L505 | 6150004090 | COL LS-469 (C-13969) | | |
| L507 | 6140003530 | COL LR-395 | | |
| L508 | 6140003210 | S.COL LR-358 | T | 75.9/90.8 |
| L509 | 6140003770 | S.COL LR-414 4KBL (STP-01435) | T | 85.2/90.8 |
| L510 | 6140003770 | S.COL LR-414 4KBL (STP-01435) | T | 101.6/90.8 |
| L511 | 6200003031 | S.COL NLV32T-R47J | B | 101.9/85.8 |
| L512 | 6150004280 | COL LS-484B (C-14927) | | |
| L513 | 6140002551 | S.COL #617DB-1919=P3 | T | 90.6/69.4 |
| L514 | 6140002551 | S.COL #617DB-1919=P3 | T | 78/69.4 |
| L515 | 6200003001 | S.COL NLV32T-R22J | T | 111.3/65.7 |
| L516 | 6200003021 | S.COL NLV32T-R33J | T | 102.8/71.4 |
| L517 | 6200001831 | S.COL NLV32T-100J | T | 99.4/73.5 |
| L518 | 6200010720 | S.COL C2520C-56NG-A | T | 71.2/69.1 |
| L519 | 6200010860 | S.COL C2520C-R10G-A (0.1U) | T | 67.6/70.3 |
| L521 | 6140003900 | COL LR-489 | | |
| L522 | 6140003890 | COL LR-488 | | |
| L523 | 6200010381 | S.COL ELJRE R15JFA | B | 90.6/76.8 |
| L524 | 6180002971 | S.COL NLV32T-068J | B | 102.6/63.5 |
| L525 | 6180002971 | S.COL NLV32T-068J | B | 100.7/67.3 |
| L526 | 6180002971 | S.COL NLV32T-068J | B | 97/67.2 |
| L527 | 6200010660 | S.COL C2520C-R15G-A (0.15U) | T | 64/71.6 |
| L528 | 6200003261 | S.COL NLV32T-101J | T | 33.6/96.3 |
| L529 | 6200010381 | S.COL ELJRE R15JFA | B | 93.2/78.1 |
| L601 | 6200003101 | S.COL NLV32T-3R9J | B | 38.2/53.1 |
| L602 | 6200003131 | S.COL NLV32T-120J | B | 34.7/49.6 |
| L603 | 6200003131 | S.COL NLV32T-120J | B | 38.9/43.2 |
| L604 | 6200003131 | S.COL NLV32T-120J | B | 34.7/37.4 |
| L605 | 6200003101 | S.COL NLV32T-3R9J | B | 38.2/33.8 |
| L606 | 6200002961 | S.COL NLV32T-4R7J | B | 49/53.1 |
| L607 | 6200001851 | S.COL NLV32T-5R6J | B | 45.5/49.6 |
| L608 | 6200001851 | S.COL NLV32T-5R6J | B | 49.7/43.5 |
| L609 | 6200001851 | S.COL NLV32T-5R6J | B | 45.5/37.4 |
| L610 | 6200002961 | S.COL NLV32T-4R7J | B | 49/33.8 |
| L611 | 6200002991 | S.COL NLV32T-2R2J | B | 59.8/53.1 |
| L612 | 6200003111 | S.COL NLV32T-6R8J | B | 56.3/49.6 |
| L613 | 6200003111 | S.COL NLV32T-6R8J | B | 60.5/43.5 |
| L614 | 6200003111 | S.COL NLV32T-6R8J | B | 56.3/37.4 |
| L615 | 6200002991 | S.COL NLV32T-2R2J | B | 59.8/33.8 |
| L616 | 6200002991 | S.COL NLV32T-2R2J | B | 70.7/53.1 |
| L617 | 6200003321 | S.COL NLV32T-3R3J | B | 67.1/49.6 |
| L618 | 6200003321 | S.COL NLV32T-3R3J | B | 71.3/43.5 |
| L619 | 6200003321 | S.COL NLV32T-3R3J | B | 67.1/37.4 |
| L620 | 6200002991 | S.COL NLV32T-2R2J | B | 70.6/33.8 |
| L621 | 6200003061 | S.COL NLV32T-1R2J | B | 81.5/53.1 |
| L622 | 6200003091 | S.COL NLV32T-2R7J | B | 78/49.6 |
| L623 | 6200003091 | S.COL NLV32T-2R7J | B | 82.2/43.5 |
| L624 | 6200003091 | S.COL NLV32T-2R7J | B | 78/37.4 |
| L625 | 6200003061 | S.COL NLV32T-1R2J | B | 81.5/33.8 |
| L626 | 6200003331 | S.COL NLV32T-1R0J | T | 37.8/50 |
| L627 | 6200003081 | S.COL NLV32T-1R8J | T | 40.8/50 |
| L628 | 6200003081 | S.COL NLV32T-1R8J | T | 40.2/43.5 |
| L629 | 6200003081 | S.COL NLV32T-1R8J | T | 40.8/36.9 |
| L630 | 6200003331 | S.COL NLV32T-1R0J | T | 37.8/36.9 |
| L631 | 6200003041 | S.COL NLV32T-R68J | T | 46.8/50 |
| L632 | 6200003071 | S.COL NLV32T-1R5J | T | 49.8/50 |
| L633 | 6200003071 | S.COL NLV32T-1R5J | T | 49.2/43.5 |
| L634 | 6200003071 | S.COL NLV32T-1R5J | T | 49.8/36.9 |
| L635 | 6200003041 | S.COL NLV32T-R68J | T | 46.8/36.9 |
| L636 | 6200002981 | S.COL NLV32T-R56J | T | 55.8/50 |
| L637 | 6200003051 | S.COL NLV32T-R82J | T | 58.9/50 |
| L638 | 6200003051 | S.COL NLV32T-R82J | T | 58.2/43.5 |
| L639 | 6200003051 | S.COL NLV32T-R82J | T | 58.8/36.9 |
| L640 | 6200002981 | S.COL NLV32T-R56J | T | 55.8/36.9 |
| L641 | 6200003021 | S.COL NLV32T-R33J | T | 64.8/50 |
| L642 | 6200003041 | S.COL NLV32T-R68J | T | 67.8/50 |
| L643 | 6200003041 | S.COL NLV32T-R68J | T | 67.2/43.5 |
| L644 | 6200003041 | S.COL NLV32T-R68J | T | 67.8/36.9 |
| L645 | 6200003021 | S.COL NLV32T-R33J | T | 64.8/36.9 |
| L646 | 6200005491 | S.COL NLV32T-331J | T | 79.8/50 |
| L647 | 6200007810 | S.COL LQH31HN95NK03L | T | 73.2/51.3 |
| L648 | 6200009810 | S.COL LQH31HNR61J03L | T | 76.8/50 |
| L649 | 6200009810 | S.COL LQH31HNR61J03L | T | 75.5/43.7 |
| L650 | 6200009810 | S.COL LQH31HNR61J03L | T | 76.8/36.9 |
| L651 | 6200007810 | S.COL LQH31HN95NK03L | T | 73.2/35.5 |
| L801 | 6200005491 | S.COL NLV32T-331J | T | 37.2/23.4 |
| L802 | 6200003261 | S.COL NLV32T-101J | B | 37.2/23.8 |
| L803 | 6140003970 | COL LR-494 | | |
| L804 | 6200003241 | S.COL NLV32T-221J | B | 49.2/26 |
| L820 | 6200003161 | S.COL NLV32T-270J | T | 86.6/48.4 |
| L821 | 6200003191 | S.COL NLV32T-470J | T | 85.8/44.9 |

## [MAIN UNIT]

| REF NO. | PARTS NO. | DESCRIPTION | M. | H/V LOCATION |
|---|---|---|---|---|
| L822 | 6200003201 | S.COL NLV32T-560J | T | 86.6/39.8 |
| R1 | 7030003550 | S.RES ERJ3GEYJ 822 V (8.2 K) | B | 214.8/107.3 |
| R2 | 7030003550 | S.RES ERJ3GEYJ 822 V (8.2 K) | B | 174.1/104.9 |
| R3 | 7030003520 | S.RES ERJ3GEYJ 472 V (4.7 K) | B | 161.1/103.9 |
| R4 | 7030003620 | S.RES ERJ3GEYJ 333 V (33 K) | B | 161.1/101.1 |
| R5 | 7030003580 | S.RES ERJ3GEYJ 153 V (15 K) | B | 161.9/99.1 |
| R6 | 7030003520 | S.RES ERJ3GEYJ 472 V (4.7 K) | B | 161.8/93.8 |
| R7 | 7030003520 | S.RES ERJ3GEYJ 472 V (4.7 K) | B | 172.2/104.2 |
| R8 | 7030003620 | S.RES ERJ3GEYJ 333 V (33 K) | B | 170.6/101.2 |
| R9 | 7030003580 | S.RES ERJ3GEYJ 153 V (15 K) | B | 172.8/100.4 |
| R10 | 7030003520 | S.RES ERJ3GEYJ 472 V (4.7 K) | B | 172.7/95.1 |
| R11 | 7030009891 | S.RES ERA3YED 151V (150) | B | 167.1/94.5 |
| R12 | 7030003560 | S.RES ERJ3GEYJ 103 V (10 K) | B | 167.1/96.3 |
| R13 | 7030003480 | S.RES ERJ3GEYJ 222 V (2.2 K) | B | 148.7/106.9 |
| R14 | 7030003560 | S.RES ERJ3GEYJ 103 V (10 K) | B | 146.9/106.9 |
| R15 | 7030003640 | S.RES ERJ3GEYJ 473 V (47 K) | B | 145.1/110.4 |
| R16 | 7030003680 | S.RES ERJ3GEYJ 104 V (100 K) | T | 224.8/77.8 |
| R17 | 7030003680 | S.RES ERJ3GEYJ 104 V (100 K) | T | 223.4/77.8 |
| R18 | 7030003400 | S.RES ERJ3GEYJ 471 V (470) | T | 222.1/77.8 |
| R19 | 7030003680 | S.RES ERJ3GEYJ 104 V (100 K) | T | 227.2/77.8 |
| R20 | 7030003680 | S.RES ERJ3GEYJ 104 V (100 K) | T | 228.6/77.8 |
| R21 | 7030003400 | S.RES ERJ3GEYJ 471 V (470) | T | 230/77.8 |
| R22 | 7030003560 | S.RES ERJ3GEYJ 103 V (10 K) | T | 180.8/69.6 |
| R23 | 7030003560 | S.RES ERJ3GEYJ 103 V (10 K) | T | 181.6/67.8 |
| R24 | 7030003560 | S.RES 10K ERJ3GE | T | 182.3/69.7 |
| R25 | 7030003440 | S.RES ERJ3GEYJ 102 V (1 K) | T | 181.6/71.6 |
| R26 | 7030003560 | S.RES ERJ3GEYJ 103 V (10 K) | T | 193.3/69.7 |
| R27 | 7030003560 | S.RES ERJ3GEYJ 103 V (10 K) | T | 192.5/67.8 |
| R28 | 7030003560 | S.RES 10K ERJ3GE | T | 191.8/69.7 |
| R29 | 7030003440 | S.RES ERJ3GEYJ 102 V (1 K) | T | 192.5/71.6 |
| R30 | 7030003320 | S.RES ERJ3GEYJ 101 V (100) | T | 192.5/66.5 |
| R31 | 7030003560 | S.RES ERJ3GEYJ 103 V (10 K) | T | 192.9/88 |
| R32 | 7030003560 | S.RES ERJ3GEYJ 103 V (10 K) | T | 192.9/86.7 |
| R33 | 7030003560 | S.RES ERJ3GEYJ 103 V (10 K) | B | 188.8/83.7 |
| R34 | 7030003440 | S.RES ERJ3GEYJ 102 V (1 K) | T | 222.3/96.5 |
| R35 | 7030003580 | S.RES ERJ3GEYJ 153 V (15 K) | T | 222.3/97.8 |
| R36 | 7030003580 | S.RES ERJ3GEYJ 153 V (15 K) | T | 225.1/99 |
| R37 | 7030003320 | S.RES ERJ3GEYJ 101 V (100) | T | 219.7/97.8 |
| R38 | 7030003390 | S.RES ERJ3GEYJ 391 V (390) | T | 225.1/100.3 |
| R39 | 7030003440 | S.RES ERJ3GEYJ 102 V (1 K) | T | 179.3/97.8 |
| R40 | 7030003580 | S.RES ERJ3GEYJ 153 V (15 K) | T | 179.3/99.1 |
| R41 | 7030003580 | S.RES ERJ3GEYJ 153 V (15 K) | T | 182.3/100.3 |
| R42 | 7030003320 | S.RES ERJ3GEYJ 101 V (100) | T | 176.5/99.1 |
| R43 | 7030003390 | S.RES ERJ3GEYJ 391 V (390) | T | 182.3/101.6 |
| R44 | 7030003320 | S.RES ERJ3GEYJ 101 V (100) | T | 181.6/66.5 |
| R47 | 7030003560 | S.RES ERJ3GEYJ 103 V (10 K) | B | 185.5/83.7 |
| R49 | 7540000270 | S.ASB ERZVF2M201 | B | 110.1/123.5 |
| R50 | 7310003820 | TRI EVN-D2AA03 B14 | | |
| R51 | 7030003560 | S.RES ERJ3GEYJ 103 V (10 K) | B | 152/123.2 |
| R52 | 7030003200 | S.RES ERJ3GEYJ 100 V (10) | B | 109.6/98.6 |
| R53 | 7030003390 | S.RES ERJ3GEYJ 391 V (390) | B | 118.6/102.4 |
| R54 | 7030003480 | S.RES ERJ3GEYJ 222 V (2.2 K) | T | 89.9/109.6 |
| R55 | 7030003480 | S.RES ERJ3GEYJ 222 V (2.2 K) | T | 91.3/109.6 |
| R56 | 7030003520 | S.RES ERJ3GEYJ 472 V (4.7 K) | T | 88.4/109.6 |
| R57 | 7030003620 | S.RES ERJ3GEYJ 333 V (33 K) | T | 86.1/109.9 |
| R58 | 7030003580 | S.RES ERJ3GEYJ 153 V (15 K) | T | 83.5/109.9 |
| R59 | 7030003520 | S.RES ERJ3GEYJ 472 V (4.7 K) | T | 85.4/107.6 |
| R60 | 7510001511 | S.TMR NTCG16 4LH 223JT | B | 125/86.8 |
| R61 | 7030003660 | S.RES ERJ3GEYJ 683 V (68 K) | B | 123.2/86.8 |
| R62 | 7030003480 | S.RES ERJ3GEYJ 222 V (2.2 K) | B | 121.4/86.8 |
| R63 | 7030003680 | S.RES ERJ3GEYJ 104 V (100 K) | B | 124/82.5 |
| R64 | 7030003560 | S.RES ERJ3GEYJ 103 V (10 K) | B | 124/84.3 |
| R65 | 7030003720 | S.RES ERJ3GEYJ 224 V (220 K) | B | 121.4/83.5 |
| R66 | 7030003320 | S.RES ERJ3GEYJ 101 V (100) | B | 121.4/80.2 |
| R67 | 7030005681 | S.RES ERA3YKD 473V (47 K) | B | 105.3/90.5 |
| R68 | 7030008121 | S.RES ERA3YED 682V (6.8 K) | B | 110/87.9 |
| R69 | 7310005530 | S.TRI TMC3ADCS2X (470) | T | 108.9/90 |
| R70 | 7030008121 | S.RES ERA3YED 682V (6.8 K) | B | 108.9/90.5 |
| R71 | 7030005681 | S.RES ERA3YKD 473V (47 K) | B | 107.1/90.5 |
| R72 | 7030003740 | S.RES ERJ3GEYJ 334 V (330 K) | B | 110.7/90.5 |
| R73 | 7030003520 | S.RES ERJ3GEYJ 472 V (4.7 K) | T | 109/78 |
| R74 | 7030003720 | S.RES ERJ3GEYJ 224 V (220 K) | B | 121.4/91.9 |
| R75 | 7030003600 | S.RES ERJ3GEYJ 223 V (22 K) | T | 108/86.3 |
| R76 | 7030003620 | S.RES ERJ3GEYJ 333 V (33 K) | T | 110.6/86.3 |
| R77 | 7030003720 | S.RES ERJ3GEYJ 224 V (220 K) | B | 110.7/85.6 |
| R78 | 7030003680 | S.RES ERJ3GEYJ 104 V (100 K) | T | 118/90.4 |
| R79 | 7310005590 | S.TRI TMC3ADCJ5X (220 K) | T | 114.5/90 |
| R80 | 7030003680 | S.RES ERJ3GEYJ 104 V (100 K) | T | 118.7/84.6 |
| R81 | 7310005590 | S.TRI TMC3ADCJ5X (220 K) | T | 114.5/85.1 |
| R82 | 7310005570 | S.TRI TMC3ADC15X (100 K) | T | 114.5/80.2 |
| R83 | 7030003680 | S.RES ERJ3GEYJ 104 V (100 K) | B | 116.6/79.2 |
| R84 | 7030003720 | S.RES ERJ3GEYJ 224 V (220 K) | B | 116.6/81 |
| R85 | 7030009920 | S.RES ERJ3GEYJ 335 V (3.3 M) | B | 113.3/81 |
| R86 | 7030003380 | S.RES ERJ3GEYJ 331 V (330) | B | 110.7/80.2 |
| R87 | 7030003320 | S.RES ERJ3GEYJ 101 V (100) | T | 116.1/77.8 |
| R88 | 7030003440 | S.RES ERJ3GEYJ 102 V (1 K) | T | 123/95.8 |
| R89 | 7030003440 | S.RES ERJ3GEYJ 102 V (1 K) | T | 125.6/93.2 |
| R90 | 7030003800 | S.RES ERJ3GEYJ 105 V (1 M) | B | 129.6/85.8 |
| R91 | 7030003660 | S.RES ERJ3GEYJ 683 V (68 K) | B | 129.6/88.6 |
| R92 | 7030003380 | S.RES ERJ3GEYJ 331 V (330) | B | 119.5/93.4 |
| R93 | 7310005580 | S.TRI TMC3ADCS3X (4.7 K) | T | 108.9/80.4 |
| R94 | 7030003320 | S.RES ERJ3GEYJ 101 V (100) | B | 136.8/95 |
| R95 | 7030003840 | S.RES ERJ3GEYJ 225 V (2.2 M) | B | 129.7/100.1 |
| R96 | 7030009920 | S.RES ERJ3GEYJ 335 V (3.3 M) | B | 126.4/103.7 |
| R97 | 7030011040 | S.RES ERJ3GEYJ 685 V (6.8 M) | B | 126.4/100.1 |
| R98 | 7030003320 | S.RES ERJ3GEYJ 101 V (100) | T | 122.8/90.8 |
| R99 | 7030000380 | S.RES MCR10EZHJ 1 k | B | 126.2/89.4 |
| R100 | 7030003440 | S.RES ERJ3GEYJ 102 V (1 K) | T | 216.4/79.1 |
| R101 | 7030003520 | S.RES ERJ3GEYJ 472 V (4.7 K) | T | 210.7/79.1 |
| R102 | 7030003680 | S.RES ERJ3GEYJ 104 V (100 K) | T | 212/79.1 |
| R103 | 7030003560 | S.RES ERJ3GEYJ 103 V (10 K) | T | 215.7/77 |
| R104 | 7030003560 | S.RES ERJ3GEYJ 103 V (10 K) | T | 214.3/70 |
| R105 | 7030003440 | S.RES ERJ3GEYJ 102 V (1 K) | T | 206.8/79.1 |

M.=Mounted side (T: Mounted on the Top side, B: Mounted on the Bottom side)
S.=Surface mount

## [MAIN UNIT]

| REF NO. | PARTS NO. | DESCRIPTION | M. | H/V LOCATION |
|---|---|---|---|---|
| R106 | 7030003520 | S.RES ERJ3GEYJ 472 V (4.7 K) | T | 201.1/79.1 |
| R107 | 7030003680 | S.RES ERJ3GEYJ 104 V (100 K) | T | 202.4/79.1 |
| R108 | 7030003560 | S.RES ERJ3GEYJ 103 V (10 K) | T | 206.1/77 |
| R109 | 7030003560 | S.RES ERJ3GEYJ 103 V (10 K) | T | 205.1/70 |
| R110 | 7030003560 | S.RES ERJ3GEYJ 103 V (10 K) | T | 216.5/91 |
| R111 | 7030003560 | S.RES ERJ3GEYJ 103 V (10 K) | T | 215.2/91 |
| R113 | 7030003440 | S.RES ERJ3GEYJ 102 V (1 K) | T | 215.6/70 |
| R114 | 7030003560 | S.RES ERJ3GEYJ 103 V (10 K) | T | 214.3/67.3 |
| R115 | 7030003440 | S.RES ERJ3GEYJ 102 V (1 K) | T | 203.8/70 |
| R116 | 7030003560 | S.RES ERJ3GEYJ 103 V (10 K) | T | 205.1/67.3 |
| R117 | 7030003620 | S.RES ERJ3GEYJ 333 V (33 K) | T | 124.7/75 |
| R118 | 7030003680 | S.RES ERJ3GEYJ 104 V (100 K) | T | 126/75 |
| R119 | 7030003560 | S.RES ERJ3GEYJ 103 V (10 K) | B | 217/60.1 |
| R120 | 7030003560 | S.RES ERJ3GEYJ 103 V (10 K) | B | 217/56.7 |
| R121 | 7030003610 | S.RES 27K ERJ3GE | T | 191.9/90.9 |
| R122 | 7030003610 | S.RES 27K ERJ3GE | T | 191.4/86.95 |
| R123 | 7030003520 | S.RES ERJ3GEYJ 472 V (4.7 K) | T | 214.5/46.3 |
| R124 | 7030003520 | S.RES ERJ3GEYJ 472 V (4.7 K) | T | 205.3/47.2 |
| R125 | 7030003320 | S.RES ERJ3GEYJ 101 V (100) | T | 213.6/48.8 |
| R126 | 7030003470 | S.RES ERJ3GEYJ 182 V (1.8 K) | T | 167.3/61.4 |
| R127 | 7030003470 | S.RES ERJ3GEYJ 182 V (1.8 K) | T | 167.3/62.8 |
| R128 | 7030003470 | S.RES ERJ3GEYJ 182 V (1.8 K) | T | 167.3/64.1 |
| R129 | 7030003470 | S.RES ERJ3GEYJ 182 V (1.8 K) | T | 167.3/65.4 |
| R130 | 7030003480 | S.RES ERJ3GEYJ 222 V (2.2 K) | B | 219.7/57.7 |
| R131 | 7030003480 | S.RES ERJ3GEYJ 222 V (2.2 K) | B | 219.6/59.2 |
| R132 | 7030000380 | S.RES MCR10EZHJ 1 k | B | 123.4/92.5 |
| R133 | 7030003520 | S.RES ERJ3GEYJ 472 V (4.7 K) | T | 230.6/61.6 |
| R134 | 7030003440 | S.RES ERJ3GEYJ 102 V (1 K) | T | 232.2/65.3 |
| R135 | 7030003520 | S.RES ERJ3GEYJ 472 V (4.7 K) | T | 232/53 |
| R136 | 7030003440 | S.RES ERJ3GEYJ 102 V (1 K) | T | 232/51.7 |
| R137 | 7030003480 | S.RES ERJ3GEYJ 222 V (2.2 K) | T | 232.2/64 |
| R138 | 7030003320 | S.RES ERJ3GEYJ 101 V (100) | B | 204.5/64.9 |
| R139 | 7030003560 | S.RES ERJ3GEYJ 103 V (10 K) | T | 226.2/71 |
| R140 | 7030003560 | S.RES ERJ3GEYJ 103 V (10 K) | T | 230.4/46.7 |
| R141 | 7030003560 | S.RES ERJ3GEYJ 103 V (10 K) | B | 256.3/59.4 |
| R142 | 7030003640 | S.RES ERJ3GEYJ 473 V (47 K) | B | 254.5/59.4 |
| R143 | 7030004040 | S.RES ERJ3GEYJ 4R7 V (4.7) | B | 252.4/98.6 |
| R144 | 7030004040 | S.RES ERJ3GEYJ 4R7 V (4.7) | B | 244.1/109.8 |
| R145 | 7030003440 | S.RES ERJ3GEYJ 102 V (1 K) | T | 234.8/76.9 |
| R146 | 7510001511 | S.TMR NTCG16 4LH 223JT | T | 232.2/76.9 |
| R147 | 7030003750 | S.RES ERJ3GEYJ 394 V (390 K) | T | 233.7/75.6 |
| R149 | 7030003360 | S.RES ERJ3GEYJ 221 V (220) | B | 252.2/92.4 |
| R150 | 7030003360 | S.RES ERJ3GEYJ 221 V (220) | B | 243.8/92.4 |
| R151 | 7030003410 | S.RES ERJ3GEYJ 561 V (560) | T | 243.8/33.1 |
| R152 | 7030003320 | S.RES ERJ3GEYJ 101 V (100) | B | 215.1/71.9 |
| R154 | 7030003320 | S.RES ERJ3GEYJ 101 V (100) | T | 206.3/37.3 |
| R155 | 7030003640 | S.RES ERJ3GEYJ 473 V (47 K) | T | 215.3/42.8 |
| R156 | 7030003640 | S.RES ERJ3GEYJ 473 V (47 K) | T | 204.5/39.8 |
| R157 | 7030003480 | S.RES ERJ3GEYJ 222 V (2.2 K) | T | 214.9/82.1 |
| R158 | 7030003480 | S.RES ERJ3GEYJ 222 V (2.2 K) | T | 206/82.6 |
| R159 | 7030003440 | S.RES ERJ3GEYJ 102 V (1 K) | T | 214.3/64.6 |
| R160 | 7030003440 | S.RES ERJ3GEYJ 102 V (1 K) | T | 226.7/92.1 |
| R161 | 7030003480 | S.RES ERJ3GEYJ 222 V (2.2 K) | T | 228/92.1 |
| R162 | 7030003680 | S.RES ERJ3GEYJ 104 V (100 K) | T | 226.7/89.3 |
| R163 | 7030003570 | S.RES ERJ3GEYJ 123 V (12 K) | T | 228/89.3 |
| R164 | 7030003680 | S.RES ERJ3GEYJ 104 V (100 K) | T | 229.3/89.3 |
| R165 | 7030003680 | S.RES ERJ3GEYJ 104 V (100 K) | T | 230.6/89.3 |
| R166 | 7030003400 | S.RES ERJ3GEYJ 471 V (470) | T | 231.9/89.3 |
| R167 | 7030003440 | S.RES ERJ3GEYJ 102 V (1 K) | T | 225.4/92.1 |
| R168 | 7030003480 | S.RES ERJ3GEYJ 222 V (2.2 K) | T | 224.1/92.1 |
| R169 | 7030003680 | S.RES ERJ3GEYJ 104 V (100 K) | T | 225.4/89.3 |
| R170 | 7030003570 | S.RES ERJ3GEYJ 123 V (12 K) | T | 224.1/89.3 |
| R171 | 7030003680 | S.RES ERJ3GEYJ 104 V (100 K) | T | 222.8/89.3 |
| R172 | 7030003680 | S.RES ERJ3GEYJ 104 V (100 K) | T | 221.5/89.3 |
| R173 | 7030003400 | S.RES ERJ3GEYJ 471 V (470) | T | 220.2/89.3 |
| R174 | 7030003440 | S.RES ERJ3GEYJ 102 V (1 K) | T | 205.1/64.5 |
| R175 | 7030003860 | S.RES ERJ3GE JPW V | B | 192.6/39.4 |
| R176 | 7030003450 | S.RES ERJ3GEYJ 122 V (1.2 K) | T | 107.8/82.8 |
| R180 | 7030003560 | S.RES ERJ3GEYJ 103 V (10 K) | B | 190.2/57 |
| R181 | 7030003560 | S.RES ERJ3GEYJ 103 V (10 K) | B | 191.8/57 |
| R183 | 7030003470 | S.RES ERJ3GEYJ 182 V (1.8 K) | T | 167.3/60.1 |
| R184 | 7030003470 | S.RES ERJ3GEYJ 182 V (1.8 K) | T | 167.3/58.8 |
| R185 | 7030003470 | S.RES ERJ3GEYJ 182 V (1.8 K) | T | 167.3/57.5 |
| R186 | 7030003470 | S.RES ERJ3GEYJ 182 V (1.8 K) | T | 167.3/56.2 |
| R187 | 7030003480 | S.RES ERJ3GEYJ 222 V (2.2 K) | T | 180.9/57.8 |
| R188 | 7030003480 | S.RES ERJ3GEYJ 222 V (2.2 K) | T | 180.9/56.5 |
| R189 | 7030003560 | S.RES ERJ3GEYJ 103 V (10 K) | B | 188.9/43.4 |
| R190 | 7030003560 | S.RES ERJ3GEYJ 103 V (10 K) | B | 188.9/40.6 |
| R191 | 7030003440 | S.RES ERJ3GEYJ 102 V (1 K) | T | 194.1/35.6 |
| R192 | 7030003610 | S.RES ERJ3GEYJ 273 V (27 K) | T | 192/34.9 |
| R193 | 7030003440 | S.RES ERJ3GEYJ 102 V (1 K) | T | 178.3/41.3 |
| R194 | 7030003610 | S.RES ERJ3GEYJ 273 V (27 K) | T | 181.7/35.4 |
| R195 | 7030003440 | S.RES ERJ3GEYJ 102 V (1 K) | T | 191.3/44.8 |
| R196 | 7030003440 | S.RES ERJ3GEYJ 102 V (1 K) | T | 183.4/48 |
| R197 | 7030003320 | S.RES ERJ3GEYJ 101 V (100) | T | 125.6/94.5 |
| R198 | 7030003640 | S.RES ERJ3GEYJ 473 V (47 K) | T | 120.2/90.8 |
| R199 | 7030003520 | S.RES ERJ3GEYJ 472 V (4.7 K) | T | 121.7/89 |
| R200 | 7030003560 | S.RES ERJ3GEYJ 103 V (10 K) | B | 166.9/76.4 |
| R201 | 7030003560 | S.RES ERJ3GEYJ 103 V (10 K) | T | 161.2/71.4 |
| R202 | 7030003520 | S.RES ERJ3GEYJ 472 V (4.7 K) | T | 167.5/72.8 |
| R203 | 7030003720 | S.RES ERJ3GEYJ 224 V (220 K) | T | 166.2/73.5 |
| R204 | 7030003320 | S.RES ERJ3GEYJ 101 V (100) | T | 142.2/67.8 |
| R205 | 7030003320 | S.RES ERJ3GEYJ 101 V (100) | B | 148.2/70 |
| R208 | 7030003440 | S.RES ERJ3GEYJ 102 V (1 K) | T | 147.2/75.8 |
| R211 | 7030003560 | S.RES ERJ3GEYJ 103 V (10 K) | T | 162.7/93.7 |
| R212 | 7030003520 | S.RES ERJ3GEYJ 472 V (4.7 K) | T | 165.1/91.5 |
| R213 | 7030003440 | S.RES ERJ3GEYJ 102 V (1 K) | T | 165.1/94.1 |
| R214 | 7030003600 | S.RES ERJ3GEYJ 223 V (22 K) | B | 152.9/84.5 |
| R216 | 7030003620 | S.RES ERJ3GEYJ 333 V (33 K) | B | 152.9/82.7 |
| R218 | 7030003580 | S.RES ERJ3GEYJ 153 V (15 K) | T | 138.3/85.3 |
| R221 | 7030003560 | S.RES ERJ3GEYJ 103 V (10 K) | T | 158.5/93.7 |
| R222 | 7030003520 | S.RES ERJ3GEYJ 472 V (4.7 K) | T | 155.9/91.5 |
| R223 | 7030003440 | S.RES ERJ3GEYJ 102 V (1 K) | T | 155.9/94.1 |
| R224 | 7030003600 | S.RES ERJ3GEYJ 223 V (22 K) | B | 152.9/89.3 |
| R226 | 7030003620 | S.RES ERJ3GEYJ 333 V (33 K) | B | 152.9/87.5 |

## [MAIN UNIT]

| REF NO. | PARTS NO. | DESCRIPTION | M. | H/V LOCATION |
|---|---|---|---|---|
| R228 | 7030003580 | S.RES ERJ3GEYJ 153 V (15 K) | T | 138.3/90.2 |
| R230 | 7030003320 | S.RES ERJ3GEYJ 101 V (100) | T | 66.5/5.7 |
| R231 | 7030003320 | S.RES ERJ3GEYJ 101 V (100) | T | 73.9/23.8 |
| R232 | 7030003680 | S.RES ERJ3GEYJ 104 V (100 K) | T | 74.3/20.3 |
| R233 | 7030003560 | S.RES ERJ3GEYJ 103 V (10 K) | T | 76.4/22 |
| R234 | 7030003320 | S.RES ERJ3GEYJ 101 V (100) | T | 73.3/17.2 |
| R235 | 7030003860 | S.RES ERJ3GE JPW V | T | 155.9/58.5 |
| R240 | 7030003420 | S.RES ERJ3GEYJ 681 V (680) | T | 177.1/58.1 |
| R241 | 7030003360 | S.RES ERJ3GEYJ 221 V (220) | T | 233.5/35.2 |
| R242 | 7030003440 | S.RES ERJ3GEYJ 102 V (1 K) | T | 233.4/32.7 |
| R243 | 7030003440 | S.RES ERJ3GEYJ 102 V (1 K) | T | 213.8/40.1 |
| R244 | 7030003440 | S.RES ERJ3GEYJ 102 V (1 K) | T | 217.1/43.5 |
| R245 | 7030003540 | S.RES ERJ3GEYJ 682 V (6.8 K) | T | 215.3/44.3 |
| R246 | 7030003440 | S.RES ERJ3GEYJ 102 V (1 K) | T | 205.3/41.8 |
| R247 | 7030003440 | S.RES ERJ3GEYJ 102 V (1 K) | T | 204/44.6 |
| R248 | 7030003540 | S.RES ERJ3GEYJ 682 V (6.8 K) | T | 205.3/44.6 |
| R249 | 7030003560 | S.RES ERJ3GEYJ 103 V (10 K) | T | 163.3/70.9 |
| R250 | 7030003200 | S.RES ERJ3GEYJ 100 V (10) | B | 117.1/28.7 |
| R251 | 7030003200 | S.RES ERJ3GEYJ 100 V (10) | B | 117.8/30.1 |
| R252 | 7030003200 | S.RES ERJ3GEYJ 100 V (10) | B | 117.1/31.5 |
| R253 | 7030003200 | S.RES ERJ3GEYJ 100 V (10) | B | 117.8/32.9 |
| R254 | 7030003200 | S.RES ERJ3GEYJ 100 V (10) | B | 117.1/34.3 |
| R255 | 7030003200 | S.RES ERJ3GEYJ 100 V (10) | B | 117.8/35.7 |
| R256 | 7030003200 | S.RES ERJ3GEYJ 100 V (10) | B | 117.1/37.1 |
| R257 | 7030003200 | S.RES ERJ3GEYJ 100 V (10) | B | 117.8/38.5 |
| R258 | 7030003560 | S.RES ERJ3GEYJ 103 V (10 K) | B | 120.4/28.7 |
| R259 | 7030003560 | S.RES ERJ3GEYJ 103 V (10 K) | B | 121.2/30.1 |
| R260 | 7030003560 | S.RES ERJ3GEYJ 103 V (10 K) | B | 120.4/31.5 |
| R261 | 7030003560 | S.RES ERJ3GEYJ 103 V (10 K) | B | 121.2/32.9 |
| R262 | 7030003560 | S.RES ERJ3GEYJ 103 V (10 K) | B | 120.4/34.3 |
| R263 | 7030003560 | S.RES ERJ3GEYJ 103 V (10 K) | B | 121.2/35.7 |
| R264 | 7030003560 | S.RES ERJ3GEYJ 103 V (10 K) | B | 120.4/37.1 |
| R265 | 7030003560 | S.RES ERJ3GEYJ 103 V (10 K) | B | 121.2/38.5 |
| R270 | 7030003200 | S.RES ERJ3GEYJ 100 V (10) | B | 120.6/42.8 |
| R271 | 7030003200 | S.RES ERJ3GEYJ 100 V (10) | B | 121.3/44.2 |
| R272 | 7030003200 | S.RES ERJ3GEYJ 100 V (10) | B | 120.6/45.6 |
| R273 | 7030003200 | S.RES ERJ3GEYJ 100 V (10) | B | 121.3/47 |
| R274 | 7030003200 | S.RES ERJ3GEYJ 100 V (10) | B | 120.6/48.4 |
| R275 | 7030003200 | S.RES ERJ3GEYJ 100 V (10) | B | 121.3/49.8 |
| R276 | 7030003200 | S.RES ERJ3GEYJ 100 V (10) | B | 120.6/51.2 |
| R277 | 7030003200 | S.RES ERJ3GEYJ 100 V (10) | B | 124.2/54.7 |
| R278 | 7030003560 | S.RES ERJ3GEYJ 103 V (10 K) | B | 124.3/42.8 |
| R279 | 7030003560 | S.RES ERJ3GEYJ 103 V (10 K) | B | 125/44.2 |
| R280 | 7030003560 | S.RES ERJ3GEYJ 103 V (10 K) | B | 124.3/45.6 |
| R281 | 7030003560 | S.RES ERJ3GEYJ 103 V (10 K) | B | 125/47 |
| R282 | 7030003560 | S.RES ERJ3GEYJ 103 V (10 K) | B | 124.3/48.4 |
| R283 | 7030003560 | S.RES ERJ3GEYJ 103 V (10 K) | B | 125/49.8 |
| R284 | 7030003560 | S.RES ERJ3GEYJ 103 V (10 K) | B | 124.3/51.2 |
| R285 | 7030003560 | S.RES ERJ3GEYJ 103 V (10 K) | B | 125/52.6 |
| R290 | 7030003200 | S.RES ERJ3GEYJ 100 V (10) | B | 164.1/41.5 |
| R291 | 7030003200 | S.RES ERJ3GEYJ 100 V (10) | B | 164.1/39.7 |
| R292 | 7030003200 | S.RES ERJ3GEYJ 100 V (10) | B | 164.1/37.9 |
| R293 | 7030003200 | S.RES ERJ3GEYJ 100 V (10) | B | 164.1/36.1 |
| R294 | 7030003200 | S.RES ERJ3GEYJ 100 V (10) | B | 164.1/34.3 |
| R295 | 7030003200 | S.RES ERJ3GEYJ 100 V (10) | B | 164.1/32.5 |
| R296 | 7030003200 | S.RES ERJ3GEYJ 100 V (10) | B | 164.1/30.7 |
| R298 | 7030003560 | S.RES ERJ3GEYJ 103 V (10 K) | B | 160.8/41.5 |
| R299 | 7030003560 | S.RES ERJ3GEYJ 103 V (10 K) | B | 160.8/39.7 |
| R300 | 7030003560 | S.RES ERJ3GEYJ 103 V (10 K) | B | 160.8/37.9 |
| R301 | 7030003560 | S.RES ERJ3GEYJ 103 V (10 K) | B | 160.8/36.1 |
| R302 | 7030003560 | S.RES ERJ3GEYJ 103 V (10 K) | B | 160.8/34.3 |
| R303 | 7030003560 | S.RES ERJ3GEYJ 103 V (10 K) | B | 160.8/32.5 |
| R304 | 7030003560 | S.RES ERJ3GEYJ 103 V (10 K) | B | 160.8/30.7 |
| R310 | 7030003200 | S.RES ERJ3GEYJ 100 V (10) | B | 166.1/55.9 |
| R311 | 7030003200 | S.RES ERJ3GEYJ 100 V (10) | B | 163.5/54.1 |
| R312 | 7030003200 | S.RES ERJ3GEYJ 100 V (10) | B | 164.1/52.3 |
| R313 | 7030003200 | S.RES ERJ3GEYJ 100 V (10) | B | 164.1/50.5 |
| R314 | 7030003200 | S.RES ERJ3GEYJ 100 V (10) | B | 164.1/48.7 |
| R315 | 7030003200 | S.RES ERJ3GEYJ 100 V (10) | B | 164.1/46.9 |
| R316 | 7030003200 | S.RES ERJ3GEYJ 100 V (10) | B | 164.1/45.1 |
| R317 | 7030003200 | S.RES ERJ3GEYJ 100 V (10) | B | 164.1/43.3 |
| R318 | 7030003560 | S.RES ERJ3GEYJ 103 V (10 K) | B | 162.1/55.9 |
| R319 | 7030003560 | S.RES ERJ3GEYJ 103 V (10 K) | B | 160.2/54.1 |
| R320 | 7030003560 | S.RES ERJ3GEYJ 103 V (10 K) | B | 160.8/52.3 |
| R321 | 7030003560 | S.RES ERJ3GEYJ 103 V (10 K) | B | 160.8/50.5 |
| R322 | 7030003560 | S.RES ERJ3GEYJ 103 V (10 K) | B | 160.8/48.7 |
| R323 | 7030003560 | S.RES ERJ3GEYJ 103 V (10 K) | B | 160.8/46.9 |
| R324 | 7030003560 | S.RES ERJ3GEYJ 103 V (10 K) | B | 160.8/45.1 |
| R325 | 7030003560 | S.RES ERJ3GEYJ 103 V (10 K) | B | 160.8/43.3 |
| R330 | 7030009891 | S.RES ERA3YED 151V (150) | T | 155/65.5 |
| R331 | 7030009851 | S.RES ERA3YED 271V (270) | T | 152.4/65.5 |
| R341 | 7030003520 | S.RES ERJ3GEYJ 472 V (4.7 K) | B | 199.8/27.5 |
| R342 | 7030004050 | S.RES ERJ3GEYJ 1R0 V (1) | T | 214.6/28.5 |
| R351 | 7030003680 | S.RES ERJ3GEYJ 104 V (100 K) | T | 129.6/81.6 |
| R352 | 7030003640 | S.RES ERJ3GEYJ 473 V (47 K) | T | 132.5/83.2 |
| R353 | 7030003560 | S.RES ERJ3GEYJ 103 V (10 K) | T | 134.7/83.7 |
| R361 | 7030003520 | S.RES ERJ3GEYJ 472 V (4.7 K) | B | 144.7/26.2 |
| R362 | 7030004050 | S.RES ERJ3GEYJ 1R0 V (1) | T | 157.7/16.5 |
| R381 | 7030004050 | S.RES ERJ3GEYJ 1R0 V (1) | T | 93.7/50.7 |
| R397 | 7030003410 | S.RES ERJ3GEYJ 561 V (560) | B | 108.3/36.7 |
| R398 | 7030007860 | S.RES ERJ3GEYJ 8R2V (8.2) | B | 110.2/38.7 |
| R399 | 7030003410 | S.RES ERJ3GEYJ 561 V (560) | B | 108.3/39.6 |
| R400 | 7030003360 | S.RES ERJ3GEYJ 221 V (220) | T | 228.3/9.9 |
| R401 | 7030003360 | S.RES ERJ3GEYJ 221 V (220) | B | 227.3/9.9 |
| R402 | 7030003360 | S.RES ERJ3GEYJ 221 V (220) | T | 226.3/9.9 |
| R403 | 7030003360 | S.RES ERJ3GEYJ 221 V (220) | T | 28.3/9.9 |
| R404 | 7030003360 | S.RES ERJ3GEYJ 221 V (220) | T | 27/9.9 |
| R405 | 7030003360 | S.RES ERJ3GEYJ 221 V (220) | T | 25.7/9.9 |
| R410 | 7030003320 | S.RES ERJ3GEYJ 101 V (100) | T | 9.9/56 |
| R413 | 7030003320 | S.RES ERJ3GEYJ 101 V (100) | B | 9.9/53 |
| R414 | 7030003320 | S.RES ERJ3GEYJ 101 V (100) | T | 9.9/52 |
| R415 | 7030003320 | S.RES ERJ3GEYJ 101 V (100) | B | 9.9/51 |
| R416 | 7030003320 | S.RES ERJ3GEYJ 101 V (100) | T | 9.9/50 |
| R417 | 7030003320 | S.RES ERJ3GEYJ 101 V (100) | B | 9.9/47 |
| R418 | 7030003320 | S.RES ERJ3GEYJ 101 V (100) | T | 9.9/46 |

M.=Mounted side (T: Mounted on the Top side, B: Mounted on the Bottom side)
S.=Surface mount

## [MAIN UNIT]

| REF NO. | PARTS NO. | DESCRIPTION | M. | H/V LOCATION |
|---|---|---|---|---|
| R419 | 7030003320 | S.RES ERJ3GEYJ 101 V (100) | B | 9.9/45 |
| R420 | 7030003320 | S.RES ERJ3GEYJ 101 V (100) | T | 9.9/44 |
| R421 | 7030003320 | S.RES ERJ3GEYJ 101 V (100) | B | 9.9/43 |
| R422 | 7030003320 | S.RES ERJ3GEYJ 101 V (100) | T | 9.9/32 |
| R423 | 7030003320 | S.RES ERJ3GEYJ 101 V (100) | T | 9.9/30 |
| R424 | 7030003320 | S.RES ERJ3GEYJ 101 V (100) | B | 9.9/29 |
| R450 | 7030003600 | S.RES ERJ3GEYJ 223 V (22 K) | B | 205.8/28 |
| R451 | 7030003600 | S.RES ERJ3GEYJ 223 V (22 K) | B | 166.9/18.4 |
| R452 | 7030003600 | S.RES ERJ3GEYJ 223 V (22 K) | B | 94.3/43.7 |
| R460 | 7030003560 | S.RES ERJ3GEYJ 103 V (10 K) | B | 144.4/79.4 |
| R461 | 7030003560 | S.RES ERJ3GEYJ 103 V (10 K) | B | 144.1/73.6 |
| R462 | 7030003580 | S.RES ERJ3GEYJ 153 V (15 K) | T | 79.1/23.3 |
| R463 | 7030003560 | S.RES ERJ3GEYJ 103 V (10 K) | T | 158.6/71.4 |
| R466 | 7030003440 | S.RES ERJ3GEYJ 102 V (1 K) | T | 73.7/22.2 |
| R467 | 7030003320 | S.RES ERJ3GEYJ 101 V (100) | B | 148.2/73.6 |
| R468 | 7030003620 | S.RES ERJ3GEYJ 333 V (33 K) | T | 142.2/77.4 |
| R469 | 7030003520 | S.RES ERJ3GEYJ 472 V (4.7 K) | T | 143/75.7 |
| R470 | 7030003620 | S.RES ERJ3GEYJ 333 V (33 K) | T | 165.9/78.4 |
| R471 | 7030003440 | S.RES ERJ3GEYJ 102 V (1 K) | T | 152.2/67.8 |
| R472 | 7030003640 | S.RES ERJ3GEYJ 473 V (47 K) | T | 165.9/77.1 |
| R474 | 7030003600 | S.RES ERJ3GEYJ 223 V (22 K) | T | 132.5/75.3 |
| R476 | 7030003760 | S.RES ERJ3GEYJ 474 V (470 K) | T | 126.5/77.5 |
| R479 | 7030003550 | S.RES ERJ3GEYJ 822 V (8.2 K) | B | 170.5/73.6 |
| R481 | 7030003860 | S.RES ERJ3GE JPW V | B | 170.5/70.8 |
| R482 | 7030000010 | S.RES MCR10EZHJ JPW (000) | B | 108.8/46 |
| R483 | 7030000010 | S.RES MCR10EZHJ JPW (000) | B | 206.6/18.3 |
| R484 | 7030000010 | S.RES MCR10EZHJ JPW (000) | B | 151.6/27.6 |
| R485 | 7030003860 | S.RES ERJ3GE JPW V | T | 9.9/48 |
| R486 | 7030003860 | S.RES ERJ3GE JPW V | B | 9.9/49 |
| R487 | 7030000010 | S.RES MCR10EZHJ JPW (000) | T | 9.9/58.1 |
| R488 | 7030003860 | S.RES ERJ3GE JPW V | B | 111.4/76.2 |
| R489 | 7030003500 | S.RES ERJ3GEYJ 332 V (3.3 K) | B | 229/6 |
| R490 | 7030003440 | S.RES ERJ3GEYJ 102 V (1 K) | B | 159.4/63.3 |
| R491 | 7030003560 | S.RES ERJ3GEYJ 103 V (10 K) | B | 157.7/59.6 |
| R492 | 7030003560 | S.RES ERJ3GEYJ 103 V (10 K) | B | 159.5/59.6 |
| R493 | 7030003410 | S.RES ERJ3GEYJ 561 V (560) | T | 130.7/103 |
| R494 | 7030005331 | S.RES ERA3YED 562V (5.6 K) | T | 218.4/78.6 |
| R495 | 7030010480 | S.RES ERJ1TYJ 181U (180) | T | 212.4/2.3 |
| R496 | 7030005331 | S.RES ERA3YED 562V (5.6 K) | T | 218.4/77.3 |
| R497 | 7030007911 | S.RES ERA3YKD 563V (56 K) | B | 228.6/16.1 |
| R498 | 7030005631 | S.RES ERA3YKD 154V (150 K) | B | 228.6/20.2 |
| R499 | 7030005631 | S.RES ERA3YKD 154V (150 K) | B | 230.4/20.2 |
| R501 | 7030003440 | S.RES ERJ3GEYJ 102 V (1 K) | T | 20.7/58.3 |
| R502 | 7030003560 | S.RES ERJ3GEYJ 103 V (10 K) | T | 19.2/60.9 |
| R503 | 7030003440 | S.RES ERJ3GEYJ 102 V (1 K) | T | 22.2/58.3 |
| R504 | 7030003440 | S.RES ERJ3GEYJ 102 V (1 K) | T | 23.7/60.9 |
| R505 | 7030003320 | S.RES ERJ3GEYJ 101 V (100) | T | 26/61.7 |
| R506 | 7030003320 | S.RES ERJ3GEYJ 101 V (100) | T | 16.1/70.6 |
| R507 | 7030003440 | S.RES ERJ3GEYJ 102 V (1 K) | T | 22.2/72.4 |
| R508 | 7030003440 | S.RES ERJ3GEYJ 102 V (1 K) | T | 23.7/72.4 |
| R509 | 7030003320 | S.RES ERJ3GEYJ 101 V (100) | T | 26.7/72.4 |
| R510 | 7030003320 | S.RES ERJ3GEYJ 101 V (100) | T | 19.2/81.2 |
| R511 | 7030003320 | S.RES ERJ3GEYJ 101 V (100) | T | 21.4/87.5 |
| R512 | 7030003650 | S.RES ERJ3GEYJ 563 V (56 K) | B | 228.2/3.1 |
| R513 | 7030003860 | S.RES ERJ3GE JPW V | T | 103.9/68.7 |
| R514 | 7030003440 | S.RES ERJ3GEYJ 102 V (1 K) | T | 19.2/96.4 |
| R515 | 7030003410 | S.RES ERJ3GEYJ 561 V (560) | T | 26.6/96.4 |
| R516 | 7030003440 | S.RES ERJ3GEYJ 102 V (1 K) | T | 25.3/84.6 |
| R517 | 7030003520 | S.RES ERJ3GEYJ 472 V (4.7 K) | T | 23.2/84.6 |
| R518 | 7030003400 | S.RES ERJ3GEYJ 471 V (470) | B | 20.1/91.9 |
| R519 | 7030003560 | S.RES ERJ3GEYJ 103 V (10 K) | B | 20.1/89 |
| R520 | 7030003630 | S.RES ERJ3GEYJ 393 V (39 K) | B | 24.3/91.9 |
| R521 | 7030003600 | S.RES ERJ3GEYJ 223 V (22 K) | B | 24.3/87.7 |
| R522 | 7030003200 | S.RES ERJ3GEYJ 100 V (10) | B | 230.4/24.8 |
| R523 | 7030003360 | S.RES ERJ3GEYJ 221 V (220) | B | 27.9/87.7 |
| R524 | 7030003560 | S.RES ERJ3GEYJ 103 V (10 K) | B | 27.1/93.9 |
| R525 | 7030003480 | S.RES ERJ3GEYJ 222 V (2.2 K) | B | 31.3/91.9 |
| R526 | 7030003440 | S.RES ERJ3GEYJ 102 V (1 K) | B | 31.3/98.2 |
| R527 | 7030003560 | S.RES ERJ3GEYJ 103 V (10 K) | B | 31.3/94.9 |
| R528 | 7030003560 | S.RES ERJ3GEYJ 103 V (10 K) | B | 34.3/96.2 |
| R529 | 7030003560 | S.RES ERJ3GEYJ 103 V (10 K) | B | 34.3/89.7 |
| R530 | 7030003560 | S.RES ERJ3GEYJ 103 V (10 K) | B | 48.1/95.1 |
| R531 | 7030003560 | S.RES ERJ3GEYJ 103 V (10 K) | B | 48.1/82 |
| R532 | 7030003440 | S.RES ERJ3GEYJ 102 V (1 K) | B | 40.9/91.4 |
| R533 | 7030003560 | S.RES ERJ3GEYJ 103 V (10 K) | B | 44.5/91.4 |
| R534 | 7030003560 | S.RES ERJ3GEYJ 103 V (10 K) | T | 49.1/79.5 |
| R535 | 7030003440 | S.RES ERJ3GEYJ 102 V (1 K) | B | 49.9/82 |
| R536 | 7030003490 | S.RES ERJ3GEYJ 272 V (2.7 K) | B | 48.7/85.7 |
| R537 | 7030003320 | S.RES ERJ3GEYJ 101 V (100) | T | 53.5/84.4 |
| R538 | 7310005550 | S.TRI TMC3ADCJ4X (22 K) | T | 49.3/90.7 |
| R539 | 7030003400 | S.RES ERJ3GEYJ 471 V (470) | B | 51.7/95.1 |
| R540 | 7030003220 | S.RES ERJ3GEYJ 150 V (15) | B | 66.4/96.1 |
| R541 | 7030003380 | S.RES ERJ3GEYJ 331 V (330) | B | 64.3/96.9 |
| R543 | 7030003380 | S.RES ERJ3GEYJ 331 V (330) | B | 64.3/95.3 |
| R544 | 7030005671 | S.RES ERA3YKD 393V (39 K) | B | 229.4/17.7 |
| R545 | 7030004030 | S.RES ERJ3GEYJ 5R6 V (5.6) | B | 59.9/93.8 |
| R546 | 7030003430 | S.RES ERJ3GEYJ 821 V (820) | B | 58.7/90.7 |
| R547 | 7030003430 | S.RES ERJ3GEYJ 821 V (820) | B | 61.1/90.7 |
| R548 | 7030004030 | S.RES ERJ3GEYJ 5R6 V (5.6) | B | 80.6/93.8 |
| R549 | 7030003560 | S.RES ERJ3GEYJ 103 V (10 K) | T | 129.5/104.6 |
| R550 | 7030003560 | S.RES ERJ3GEYJ 103 V (10 K) | T | 132.8/106.5 |
| R551 | 7030003680 | S.RES ERJ3GEYJ 104 V (100 K) | T | 188.5/106.1 |
| R552 | 7030004040 | S.RES ERJ3GEYJ 4R7 V (4.7) | B | 101.6/88.7 |
| R553 | 7030009891 | S.RES ERA3YED 151V (150) | B | 108.3/85.2 |
| R554 | 7030003440 | S.RES ERJ3GEYJ 102 V (1 K) | B | 105.6/85.2 |
| R555 | 7510001491 | S.TMR NTCG16 3NH 681JT | B | 103.8/78 |
| R556 | 7030003480 | S.RES ERJ3GEYJ 222 V (2.2 K) | B | 103.8/80.6 |
| R557 | 7030005331 | S.RES ERA3YED 562V (5.6 K) | B | 229.4/23 |
| R558 | 7030003320 | S.RES ERJ3GEYJ 101 V (100) | B | 102.9/74.8 |
| R559 | 7030003680 | S.RES ERJ3GEYJ 104 V (100 K) | T | 132.8/105.2 |
| R560 | 7030003680 | S.RES ERJ3GEYJ 104 V (100 K) | T | 188.5/103.4 |
| R561 | 7030003680 | S.RES ERJ3GEYJ 104 V (100 K) | T | 133.6/102.4 |
| R562 | 7030003320 | S.RES ERJ3GEYJ 101 V (100) | B | 77.5/69.5 |
| R563 | 7030003300 | S.RES ERJ3GEYJ 680 V (68) | T | 110/62.7 |
| R564 | 7030003620 | S.RES ERJ3GEYJ 333 V (33 K) | T | 107.1/64.2 |

## [MAIN UNIT]

| REF NO. | PARTS NO. | DESCRIPTION | M. | H/V LOCATION |
|---|---|---|---|---|
| R565 | 7030003640 | S.RES ERJ3GEYJ 473 V (47 K) | B | 234.6/4.6 |
| R566 | 7030003330 | S.RES ERJ3GEYJ 121 V (120) | T | 102.8/74.1 |
| R567 | 7030003230 | S.RES ERJ3GEYJ 180 V (18) | B | 91.4/67.6 |
| R568 | 7030009851 | S.RES ERA3YED 271V (270) | B | 93.4/66.8 |
| R569 | 7030009851 | S.RES ERA3YED 271V (270) | B | 89.3/66.8 |
| R570 | 7030003520 | S.RES ERJ3GEYJ 472 V (4.7 K) | T | 59.8/60.7 |
| R571 | 7030003560 | S.RES ERJ3GEYJ 103 V (10 K) | B | 64.5/59.2 |
| R572 | 7030004040 | S.RES ERJ3GEYJ 4R7 V (4.7) | T | 61.5/68.2 |
| R573 | 7030003400 | S.RES ERJ3GEYJ 471 V (470) | B | 68.2/59.2 |
| R574 | 7030003280 | S.RES ERJ3GEYJ 470 V (47) | T | 69.8/63.8 |
| R575 | 7030009851 | S.RES ERA3YED 271V (270) | B | 56.7/59.3 |
| R576 | 7030003230 | S.RES ERJ3GEYJ 180 V (18) | B | 54.6/58.5 |
| R577 | 7030009851 | S.RES ERA3YED 271V (270) | B | 56.7/57.7 |
| R578 | 7030003230 | S.RES ERJ3GEYJ 180 V (18) | B | 61.6/72 |
| R579 | 7030009851 | S.RES ERA3YED 271V (270) | B | 57.9/72.8 |
| R580 | 7030009851 | S.RES ERA3YED 271V (270) | B | 57.9/71 |
| R581 | 7030003430 | S.RES ERJ3GEYJ 821 V (820) | B | 92.6/72.9 |
| R582 | 7030004030 | S.RES ERJ3GEYJ 5R6 V (5.6) | B | 91.8/70.9 |
| R583 | 7030003430 | S.RES ERJ3GEYJ 821 V (820) | B | 94.2/70.8 |
| R584 | 7510001671 | S.TMR NTCG16 4BH 103JT | T | 218.4/79.9 |
| R585 | 7030003600 | S.RES ERJ3GEYJ 223 V (22 K) | B | 25/89.8 |
| R587 | 7030003200 | S.RES ERJ3GEYJ 100 V (10) | B | 61.5/68.1 |
| R589 | 7030003400 | S.RES ERJ3GEYJ 471 V (470) | B | 64.5/63.7 |
| R590 | 7030003430 | S.RES ERJ3GEYJ 821 V (820) | B | 79.8/91.7 |
| R591 | 7030003430 | S.RES ERJ3GEYJ 821 V (820) | B | 81.5/91.7 |
| R592 | 7030000300 | S.RES MCR10EZHJ 220 (221) | B | 59.4/61.8 |
| R601 | 7030000260 | S.RES MCR10EZHJ 100 (101) | B | 42.7/43.5 |
| R602 | 7030000260 | S.RES MCR10EZHJ 100 (101) | B | 53.5/43.5 |
| R603 | 7030000260 | S.RES MCR10EZHJ 100 (101) | B | 64.3/43.5 |
| R604 | 7030000260 | S.RES MCR10EZHJ 100 (101) | B | 75.2/43.5 |
| R605 | 7030000260 | S.RES MCR10EZHJ 100 (101) | B | 86/43.5 |
| R606 | 7030000260 | S.RES MCR10EZHJ 100 (101) | T | 34.3/43.5 |
| R607 | 7030000260 | S.RES MCR10EZHJ 100 (101) | T | 43.3/43.5 |
| R608 | 7030000260 | S.RES MCR10EZHJ 100 (101) | T | 52.3/43.5 |
| R609 | 7030000260 | S.RES MCR10EZHJ 100 (101) | T | 61.3/43.5 |
| R610 | 7030003400 | S.RES ERJ3GEYJ 471 V (470) | T | 79.8/54 |
| R611 | 7030000260 | S.RES MCR10EZHJ 100 (101) | T | 70.3/43.5 |
| R612 | 7030009851 | S.RES ERA3YED 271V (270) | T | 44/54 |
| R613 | 7030003230 | S.RES ERJ3GEYJ 180 V (18) | T | 46.2/53.3 |
| R614 | 7030009851 | S.RES ERA3YED 271V (270) | T | 44/52.7 |
| R801 | 7030003380 | S.RES ERJ3GEYJ 331 V (330) | T | 37.2/26.2 |
| R802 | 7030009891 | S.RES ERA3YED 151V (150) | B | 37.2/18.7 |
| R803 | 7030003440 | S.RES ERJ3GEYJ 102 V (1 K) | B | 49.7/21 |
| R804 | 7030003490 | S.RES ERJ3GEYJ 272 V (2.7 K) | B | 47.8/21.7 |
| R805 | 7030003300 | S.RES ERJ3GEYJ 680 V (68) | T | 57.6/18.7 |
| R806 | 7030003320 | S.RES ERJ3GEYJ 101 V (100) | T | 56.2/18.7 |
| R807 | 7030003320 | S.RES ERJ3GEYJ 101 V (100) | T | 56.9/16.5 |
| R808 | 7030003640 | S.RES ERJ3GEYJ 473 V (47 K) | B | 89.9/87.6 |
| R809 | 7030003460 | S.RES ERJ3GEYJ 152 V (1.5 K) | B | 84.7/87.6 |
| R810 | 7030003680 | S.RES ERJ3GEYJ 104 V (100 K) | T | 34/22.3 |
| R811 | 7030003560 | S.RES ERJ3GEYJ 103 V (10 K) | T | 30.8/19.6 |
| R812 | 7030009851 | S.RES ERA3YED 271V (270) | T | 34/27.5 |
| R813 | 7030003230 | S.RES ERJ3GEYJ 180 V (18) | T | 34/26.2 |
| R814 | 7030009851 | S.RES ERA3YED 271V (270) | T | 34/24.9 |
| R815 | 7030003320 | S.RES ERJ3GEYJ 101 V (100) | T | 31.9/25.5 |
| R816 | 7030003680 | S.RES ERJ3GEYJ 104 V (100 K) | T | 31.2/23.6 |
| R817 | 7030003860 | S.RES ERJ3GE JPW V | T | 52.7/23.9 |
| R818 | 7030003320 | S.RES ERJ3GEYJ 101 V (100) | B | 41.7/21 |
| R820 | 7030003440 | S.RES ERJ3GEYJ 102 V (1 K) | T | 77.7/62.7 |
| R821 | 7030003320 | S.RES ERJ3GEYJ 101 V (100) | T | 88.2/60.9 |
| R822 | 7030003620 | S.RES ERJ3GEYJ 333 V (33 K) | T | 88.2/57.9 |
| R823 | 7030003280 | S.RES ERJ3GEYJ 470 V (47) | T | 83.2/51.5 |
| R824 | 7030003320 | S.RES ERJ3GEYJ 101 V (100) | T | 77/58.6 |
| R825 | 7030003320 | S.RES ERJ3GEYJ 101 V (100) | T | 82.3/33.8 |
| R826 | 7030003230 | S.RES ERJ3GEYJ 180 V (18) | T | 87.2/36.2 |
| R827 | 7030009851 | S.RES ERA3YED 271V (270) | T | 85.2/37 |
| R828 | 7030009851 | S.RES ERA3YED 271V (270) | T | 85.2/35.5 |
| R829 | 7030003400 | S.RES ERJ3GEYJ 471 V (470) | T | 86.5/55.1 |
| R830 | 7030003330 | S.RES ERJ3GEYJ 121 V (120) | T | 86/53.2 |
| R831 | 7030003600 | S.RES ERJ3GEYJ 223 V (22 K) | T | 83.2/54.5 |
| R832 | 7030003290 | S.RES ERJ3GEYJ 560 V (56) | B | 87.3/71.1 |
| R833 | 7030003480 | S.RES ERJ3GEYJ 222 V (2.2 K) | B | 89.4/71.8 |
| R834 | 7030003440 | S.RES ERJ3GEYJ 102 V (1 K) | B | 85.3/79.2 |
| R835 | 7030003440 | S.RES ERJ3GEYJ 102 V (1 K) | B | 83.1/74.2 |
| R836 | 7030003500 | S.RES ERJ3GEYJ 332 V (3.3 K) | B | 83.2/79.1 |
| R837 | 7030003480 | S.RES ERJ3GEYJ 222 V (2.2 K) | T | 29.8/81.6 |
| R838 | 7030003510 | S.RES ERJ3GEYJ 392 V (3.9 K) | T | 33.6/73.8 |
| R839 | 7030003480 | S.RES ERJ3GEYJ 222 V (2.2 K) | T | 38.1/73.4 |
| R840 | 7030003400 | S.RES ERJ3GEYJ 471 V (470) | T | 38.1/72.1 |
| R841 | 7030003300 | S.RES ERJ3GEYJ 680 V (68) | T | 35.3/71.6 |
| R851 | 7030009861 | S.RES ERA3YED 471V (470) | T | 110/87.6 |
| R852 | 7030003560 | S.RES ERJ3GEYJ 103 V (10 K) | T | 37.9/69.8 |
| R900 | 7030003320 | S.RES ERJ3GEYJ 101 V (100) | T | 126.2/5.8 |
| R901 | 7030003320 | S.RES ERJ3GEYJ 101 V (100) | B | 125.2/5.8 |
| R902 | 7030003320 | S.RES ERJ3GEYJ 101 V (100) | T | 124.2/5.8 |
| R903 | 7030003320 | S.RES ERJ3GEYJ 101 V (100) | B | 123.2/5.8 |
| R904 | 7030003320 | S.RES ERJ3GEYJ 101 V (100) | T | 122.2/5.8 |
| R906 | 7030003320 | S.RES ERJ3GEYJ 101 V (100) | T | 120.2/5.8 |
| R908 | 7030003320 | S.RES ERJ3GEYJ 101 V (100) | T | 118.2/5.8 |
| R909 | 7030003320 | S.RES ERJ3GEYJ 101 V (100) | B | 117.2/5.8 |
| R910 | 7030003320 | S.RES ERJ3GEYJ 101 V (100) | T | 116.2/5.8 |
| R911 | 7030003320 | S.RES ERJ3GEYJ 101 V (100) | B | 115.2/5.8 |
| R912 | 7030003320 | S.RES ERJ3GEYJ 101 V (100) | T | 114.2/5.8 |
| R913 | 7030003320 | S.RES ERJ3GEYJ 101 V (100) | B | 113.2/5.8 |
| R914 | 7030003320 | S.RES ERJ3GEYJ 101 V (100) | T | 112.2/5.8 |
| R915 | 7030003320 | S.RES ERJ3GEYJ 101 V (100) | B | 111.2/5.8 |
| R916 | 7030003320 | S.RES ERJ3GEYJ 101 V (100) | T | 110.2/5.8 |
| R917 | 7030003320 | S.RES ERJ3GEYJ 101 V (100) | B | 109.2/5.8 |
| R918 | 7030003320 | S.RES ERJ3GEYJ 101 V (100) | T | 13.8/119.5 |
| R920 | 7030003320 | S.RES ERJ3GEYJ 101 V (100) | T | 125.7/15.4 |
| R921 | 7030003320 | S.RES ERJ3GEYJ 101 V (100) | B | 124.7/15.4 |
| R922 | 7030003320 | S.RES ERJ3GEYJ 101 V (100) | T | 123.7/15.4 |
| R923 | 7030003320 | S.RES ERJ3GEYJ 101 V (100) | B | 122.7/15.4 |
| R924 | 7030003320 | S.RES ERJ3GEYJ 101 V (100) | T | 121.7/15.4 |
| R925 | 7030003320 | S.RES ERJ3GEYJ 101 V (100) | B | 120.7/15.4 |

M.=Mounted side (T: Mounted on the Top side, B: Mounted on the Bottom side)
S.=Surface mount

## [MAIN UNIT]

| REF NO. | PARTS NO. | DESCRIPTION | | M. | H/V LOCATION |
|---|---|---|---|---|---|
| R926 | 7030003320 | S.RES | ERJ3GEYJ 101 V (100) | T | 119.7/15.4 |
| R927 | 7030003320 | S.RES | ERJ3GEYJ 101 V (100) | B | 118.7/15.4 |
| R928 | 7030003320 | S.RES | ERJ3GEYJ 101 V (100) | T | 117.7/15.4 |
| R929 | 7030003320 | S.RES | ERJ3GEYJ 101 V (100) | B | 116.7/15.4 |
| R930 | 7030003320 | S.RES | ERJ3GEYJ 101 V (100) | T | 115.7/15.4 |
| R932 | 7030003320 | S.RES | ERJ3GEYJ 101 V (100) | T | 113.7/15.4 |
| R933 | 7030003320 | S.RES | ERJ3GEYJ 101 V (100) | B | 112.7/15.4 |
| R934 | 7030003320 | S.RES | ERJ3GEYJ 101 V (100) | T | 111.7/15.4 |
| R936 | 7030003320 | S.RES | ERJ3GEYJ 101 V (100) | T | 109.7/15.4 |
| R937 | 7030003320 | S.RES | ERJ3GEYJ 101 V (100) | B | 108.7/15.4 |
| R938 | 7030003320 | S.RES | ERJ3GEYJ 101 V (100) | T | 12.5/119.5 |
| R940 | 7030003320 | S.RES | ERJ3GEYJ 101 V (100) | T | 94.3/5.8 |
| R941 | 7030003320 | S.RES | ERJ3GEYJ 101 V (100) | B | 93.3/5.8 |
| R942 | 7030003320 | S.RES | ERJ3GEYJ 101 V (100) | T | 92.3/5.8 |
| R943 | 7030003320 | S.RES | ERJ3GEYJ 101 V (100) | B | 91.3/5.8 |
| R944 | 7030003320 | S.RES | ERJ3GEYJ 101 V (100) | T | 90.3/5.8 |
| R945 | 7030003320 | S.RES | ERJ3GEYJ 101 V (100) | B | 89.3/5.8 |
| R946 | 7030003320 | S.RES | ERJ3GEYJ 101 V (100) | T | 88.3/5.8 |
| R947 | 7030003320 | S.RES | ERJ3GEYJ 101 V (100) | B | 87.3/5.8 |
| R948 | 7030003320 | S.RES | ERJ3GEYJ 101 V (100) | T | 86.3/5.8 |
| R949 | 7030003320 | S.RES | ERJ3GEYJ 101 V (100) | B | 85.3/5.8 |
| R950 | 7030003320 | S.RES | ERJ3GEYJ 101 V (100) | T | 84.3/5.8 |
| R951 | 7030003320 | S.RES | ERJ3GEYJ 101 V (100) | B | 83.3/5.8 |
| R952 | 7030003320 | S.RES | ERJ3GEYJ 101 V (100) | T | 82.3/5.8 |
| R953 | 7030003320 | S.RES | ERJ3GEYJ 101 V (100) | B | 81.3/5.8 |
| R954 | 7030003320 | S.RES | ERJ3GEYJ 101 V (100) | T | 80.3/5.8 |
| R955 | 7030003320 | S.RES | ERJ3GEYJ 101 V (100) | B | 79.3/5.8 |
| R957 | 7030003320 | S.RES | ERJ3GEYJ 101 V (100) | B | 77.3/5.8 |
| R958 | 7030003320 | S.RES | ERJ3GEYJ 101 V (100) | T | 76.3/5.8 |
| R960 | 7030003320 | S.RES | ERJ3GEYJ 101 V (100) | T | 93.8/15.3 |
| R961 | 7030003320 | S.RES | ERJ3GEYJ 101 V (100) | B | 92.8/15.4 |
| R962 | 7030003320 | S.RES | ERJ3GEYJ 101 V (100) | T | 91.8/15.3 |
| R963 | 7030003320 | S.RES | ERJ3GEYJ 101 V (100) | B | 90.8/15.4 |
| R964 | 7030003320 | S.RES | ERJ3GEYJ 101 V (100) | T | 89.8/15.3 |
| R966 | 7030003320 | S.RES | ERJ3GEYJ 101 V (100) | T | 87.8/15.3 |
| R967 | 7030003320 | S.RES | ERJ3GEYJ 101 V (100) | B | 86.8/15.4 |
| R968 | 7030003320 | S.RES | ERJ3GEYJ 101 V (100) | T | 85.8/15.3 |
| R969 | 7030003320 | S.RES | ERJ3GEYJ 101 V (100) | B | 84.8/15.4 |
| R970 | 7030003320 | S.RES | ERJ3GEYJ 101 V (100) | T | 83.8/15.3 |
| R971 | 7030003320 | S.RES | ERJ3GEYJ 101 V (100) | B | 82.8/15.4 |
| R972 | 7030003320 | S.RES | ERJ3GEYJ 101 V (100) | T | 81.8/15.4 |
| R973 | 7030003320 | S.RES | ERJ3GEYJ 101 V (100) | B | 80.8/15.4 |
| R974 | 7030003320 | S.RES | ERJ3GEYJ 101 V (100) | T | 79.8/15.4 |
| R975 | 7030003320 | S.RES | ERJ3GEYJ 101 V (100) | B | 78.8/15.4 |
| R976 | 7030003320 | S.RES | ERJ3GEYJ 101 V (100) | T | 77.8/15.4 |
| R977 | 7030003320 | S.RES | ERJ3GEYJ 101 V (100) | B | 76.8/15.4 |
| R978 | 7030003320 | S.RES | ERJ3GEYJ 101 V (100) | T | 75.8/15.4 |
| R979 | 7030003320 | S.RES | ERJ3GEYJ 101 V (100) | B | 74.8/15.4 |
| | | | | | |
| C1 | 4030006880 | S.CER | C1608 JB 1H 472K-T | B | 207.5/109.2 |
| C2 | 4030006880 | S.CER | C1608 JB 1H 472K-T | T | 225.7/110.3 |
| C3 | 4030006880 | S.CER | C1608 JB 1H 472K-T | B | 220.4/106.6 |
| C4 | 4030006880 | S.CER | C1608 JB 1H 472K-T | T | 204.7/110.3 |
| C5 | 4030006880 | S.CER | C1608 JB 1H 472K-T | T | 222.2/110.3 |
| C6 | 4030006880 | S.CER | C1608 JB 1H 472K-T | T | 211.7/110.3 |
| C7 | 4030006880 | S.CER | C1608 JB 1H 472K-T | T | 215.2/110.3 |
| C8 | 4030006880 | S.CER | C1608 JB 1H 472K-T | T | 200.4/110.3 |
| C9 | 4030006880 | S.CER | C1608 JB 1H 472K-T | T | 193.4/110.3 |
| C10 | 4030006880 | S.CER | C1608 JB 1H 472K-T | T | 196.9/110.3 |
| C11 | 4030006880 | S.CER | C1608 JB 1H 472K-T | B | 168/106.8 |
| C12 | 4030006880 | S.CER | C1608 JB 1H 472K-T | T | 183.7/110.3 |
| C13 | 4030006880 | S.CER | C1608 JB 1H 472K-T | B | 178.4/106.6 |
| C14 | 4030006880 | S.CER | C1608 JB 1H 472K-T | T | 162.7/110.3 |
| C15 | 4030006880 | S.CER | C1608 JB 1H 472K-T | T | 180.2/110.3 |
| C16 | 4030006880 | S.CER | C1608 JB 1H 472K-T | T | 169.7/110.3 |
| C17 | 4030006880 | S.CER | C1608 JB 1H 472K-T | T | 173.2/110.3 |
| C18 | 4030006880 | S.CER | C1608 JB 1H 472K-T | T | 158.4/110.3 |
| C19 | 4030006880 | S.CER | C1608 JB 1H 472K-T | T | 151.4/110.3 |
| C20 | 4030006880 | S.CER | C1608 JB 1H 472K-T | T | 154.9/110.3 |
| C21 | 4030006880 | S.CER | C1608 JB 1H 472K-T | B | 163.9/96.8 |
| C22 | 4030006880 | S.CER | C1608 JB 1H 472K-T | B | 174.7/98 |
| C23 | 4030006880 | S.CER | C1608 JB 1H 472K-T | B | 167.1/98.1 |
| C24 | 4030006880 | S.CER | C1608 JB 1H 472K-T | B | 145.1/106.9 |
| C25 | 4510008540 | S.ELE | EEE1CA100SR | T | 218.3/83.6 |
| C26 | 4510008540 | S.ELE | EEE1CA100SR | T | 233.7/83.5 |
| C28 | 4510008540 | S.ELE | EEE1CA100SR | T | 191.1/80.5 |
| C29 | 4510008540 | S.ELE | EEE1CA100SR | T | 184.9/80.5 |
| C30 | 4510008540 | S.ELE | EEE1CA100SR | T | 184.2/92.3 |
| C31 | 4030011600 | S.CER | C1608 JB 1E 104K-T | T | 187.7/74.5 |
| C32 | 4510008540 | S.ELE | EEE1CA100SR | T | 179/82.1 |
| C33 | 4510008540 | S.ELE | EEE1CA100SR | T | 178.9/87 |
| C34 | 4030012600 | S.CER | C2012 JB 1A 105M-T | T | 189/92.3 |
| C35 | 4030012600 | S.CER | C2012 JB 1A 105M-T | T | 179.4/92.4 |
| C36 | 4510008500 | S.ELE | EEE1CA101WP | T | 222.1/104.5 |
| C37 | 4510008540 | S.ELE | EEE1CA100SR | T | 229.5/107.3 |
| C38 | 4510008500 | S.ELE | EEE1CA101WP | T | 174.3/104.1 |
| C39 | 4510008540 | S.ELE | EEE1CA100SR | T | 181.9/104.7 |
| C40 | 4510008540 | S.ELE | EEE1CA100SR | T | 190/63.4 |
| C41 | 4510008540 | S.ELE | EEE1CA100SR | T | 184/63.4 |
| C42 | 4030011600 | S.CER | C1608 JB 1E 104K-T | T | 187.7/77.1 |
| C43 | 4030011600 | S.CER | C1608 JB 1E 104K-T | T | 194.5/74.5 |
| C44 | 4030011600 | S.CER | C1608 JB 1E 104K-T | T | 180.9/77.1 |
| C45 | 4030012600 | S.CER | C2012 JB 1A 105M-T | T | 193.3/83.8 |
| C46 | 4030012600 | S.CER | C2012 JB 1A 105M-T | T | 193.3/90.9 |
| C50 | 4030006880 | S.CER | C1608 JB 1H 472K-T | B | 139.6/118.5 |
| C51 | 4010005380 | CER | HM13SJ YB 472K 500V | | |
| C52 | 4030006880 | S.CER | C1608 JB 1H 472K-T | B | 114.5/98.6 |
| C53 | 4030006880 | S.CER | C1608 JB 1H 472K-T | B | 116.2/96.3 |
| C54 | 4030006880 | S.CER | C1608 JB 1H 472K-T | B | 79.9/123.6 |
| C55 | 4030006880 | S.CER | C1608 JB 1H 472K-T | B | 79.9/118.7 |
| C56 | 4030006880 | S.CER | C1608 JB 1H 472K-T | B | 92.8/106.5 |
| C57 | 4030018620 | S.CER | 0.0022 C1608 CH | T | 179.5/70.9 |
| C58 | 4030018620 | S.CER | 0.0022 C1608 CH | T | 194.6/70.7 |
| C61 | 4030012600 | S.CER | C2012 JB 1A 105M-T | T | 119.1/77.8 |

## [MAIN UNIT]

| REF NO. | PARTS NO. | DESCRIPTION | | M. | H/V LOCATION |
|---|---|---|---|---|---|
| C62 | 4030012600 | S.CER | C2012 JB 1A 105M-T | T | 119.1/76 |
| C65 | 4030012600 | S.CER | C2012 JB 1A 105M-T | B | 108.1/76.2 |
| C68 | 4030006860 | S.CER | C1608 JB 1H 102K-T | B | 126.4/101.9 |
| C69 | 4030011600 | S.CER | C1608 JB 1E 104K-T | T | 121.5/90.8 |
| C70 | 4030011600 | S.CER | C1608 JB 1E 104K-T | B | 122.1/89.4 |
| C71 | 4030011600 | S.CER | C1608 JB 1E 104K-T | B | 136.8/96.8 |
| C80 | 4030007130 | S.CER | C1608 CH 1H 101J-T | B | 59.2/122.2 |
| C100 | 4030011600 | S.CER | C1608 JB 1E 104K-T | B | 208.4/91 |
| C101 | 4030011600 | S.CER | C1608 JB 1E 104K-T | T | 213.4/87.4 |
| C103 | 4510008550 | S.ELE | EEE1HA010SR | T | 210.7/83.6 |
| C105 | 4030011600 | S.CER | C1608 JB 1E 104K-T | B | 201.6/91 |
| C106 | 4030011600 | S.CER | C1608 JB 1E 104K-T | T | 206.6/87.4 |
| C108 | 4510008550 | S.ELE | EEE1HA010SR | T | 202.9/83.6 |
| C110 | 4510008540 | S.ELE | EEE1CA100SR | T | 209.8/63.3 |
| C113 | 4510008540 | S.ELE | EEE1CA100SR | T | 209.8/73.8 |
| C115 | 4510008540 | S.ELE | EEE1CA100SR | T | 209.8/48.7 |
| C116 | 4510008540 | S.ELE | EEE1CA100SR | T | 209.8/38.1 |
| C117 | 4510009120 | S.ELE | EEE1VA2R2NR | T | 215.7/73.8 |
| C118 | 4510009120 | S.ELE | EEE1VA2R2NR | T | 203.9/73.8 |
| C120 | 4510008540 | S.ELE | EEE1CA100SR | T | 223.6/50.7 |
| C121 | 4510008540 | S.ELE | EEE1CA100SR | T | 214.3/58 |
| C122 | 4510008540 | S.ELE | EEE1CA100SR | T | 204.7/58 |
| C123 | 4510008550 | S.ELE | EEE1HA010SR | T | 227/56.1 |
| C124 | 4510008550 | S.ELE | EEE1HA010SR | T | 227.1/60.9 |
| C125 | 4510008540 | S.ELE | EEE1CA100SR | T | 218.8/67 |
| C126 | 4510008540 | S.ELE | EEE1CA100SR | T | 223.6/67 |
| C127 | 4510008550 | S.ELE | EEE1HA010SR | T | 234.1/60.9 |
| C128 | 4510008550 | S.ELE | EEE1HA010SR | T | 233.3/56.1 |
| C129 | 4030008650 | S.CER | C1608 JB 1H 332K-T | T | 215.6/67.3 |
| C130 | 4030008650 | S.CER | C1608 JB 1H 332K-T | T | 203.8/67.3 |
| C131 | 4030012600 | S.CER | C2012 JB 1A 105M-T | T | 220.3/52 |
| C132 | 4030012600 | S.CER | C2012 JB 1A 105M-T | T | 218.5/52 |
| C133 | 4030008880 | S.CER | C1608 JB 1H 223K-T | T | 232.2/66.6 |
| C134 | 4030008950 | S.CER | C2012 JB 1C 823K-T | T | 231.3/69 |
| C135 | 4030008880 | S.CER | C1608 JB 1H 223K-T | T | 234.1/52.3 |
| C136 | 4030008950 | S.CER | C2012 JB 1C 823K-T | T | 232.4/50.1 |
| C140 | 4510008550 | S.ELE | EEE1HA010SR | T | 249.6/35.6 |
| C141 | 4510008190 | ELE | EEUFC1E222S | | |
| C142 | 4510009080 | S.ELE | EEE1HAR22SR | T | 253.9/59.1 |
| C143 | 4510008500 | S.ELE | EEE1CA101WP | T | 253.3/67.9 |
| C144 | 4510008180 | ELE | EEUFC1E102S | | |
| C145 | 4510008180 | ELE | EEUFC1E102S | | |
| C146 | 4030011600 | S.CER | C1608 JB 1E 104K-T | B | 252.2/101.3 |
| C147 | 4030011600 | S.CER | C1608 JB 1E 104K-T | B | 242.4/107.8 |
| C148 | 4030006880 | S.CER | C1608 JB 1H 472K-T | B | 247.8/97.2 |
| C149 | 4030006880 | S.CER | C1608 JB 1H 472K-T | B | 252.2/95.4 |
| C150 | 4030006880 | S.CER | C1608 JB 1H 472K-T | B | 239.9/97.2 |
| C151 | 4030011600 | S.CER | C1608 JB 1E 104K-T | T | 228.6/73.1 |
| C152 | 4030011600 | S.CER | C1608 JB 1E 104K-T | T | 233.4/45.5 |
| C180 | 4510009010 | S.ELE | EEE1AA221P | T | 188.5/50.4 |
| C181 | 4510008540 | S.ELE | EEE1CA100SR | T | 209.5/58 |
| C182 | 4510008540 | S.ELE | EEE1CA100SR | T | 199.9/58 |
| C183 | 4510008540 | S.ELE | EEE1CA100SR | T | 194.4/57.3 |
| C184 | 4510008540 | S.ELE | EEE1CA100SR | T | 195.8/52.5 |
| C185 | 4510008540 | S.ELE | EEE1CA100SR | T | 195.8/47.7 |
| C186 | 4510008540 | S.ELE | EEE1CA100SR | T | 180.2/50.5 |
| C187 | 4030011600 | S.CER | C1608 JB 1E 104K-T | T | 183.3/39.5 |
| C188 | 4510008540 | S.ELE | EEE1CA100SR | T | 194.4/42.8 |
| C189 | 4510008540 | S.ELE | EEE1CA100SR | T | 180.2/45.6 |
| C190 | 4030011340 | S.CER | C1608 CH 1H 471J-T | T | 194.6/33.4 |
| C191 | 4030012610 | S.CER | C2012 JB 1C 474K-T | T | 191.1/37.7 |
| C192 | 4030011340 | S.CER | C1608 CH 1H 471J-T | T | 180.4/35.4 |
| C193 | 4510008540 | S.ELE | EEE1CA100SR | T | 186.8/31.6 |
| C194 | 4030012600 | S.CER | C2012 JB 1A 105M-T | T | 180.9/59.4 |
| C195 | 4030012600 | S.CER | C2012 JB 1A 105M-T | T | 180.7/54.6 |
| C196 | 4510008500 | S.ELE | EEE1CA101WP | T | 176.1/36.5 |
| C197 | 4510008500 | S.ELE | EEE1CA101WP | T | 199.7/31.9 |
| C198 | 4030011600 | S.CER | C1608 JB 1E 104K-T | T | 125.6/95.8 |
| C200 | 4510008540 | S.ELE | EEE1CA100SR | T | 153.3/80.5 |
| C201 | 4510008540 | S.ELE | EEE1CA100SR | T | 160.5/80 |
| C203 | 4510008550 | S.ELE | EEE1HA010SR | T | 170.6/70.7 |
| C204 | 4510008550 | S.ELE | EEE1HA010SR | T | 142.1/70.9 |
| C205 | 4030011600 | S.CER | C1608 JB 1E 104K-T | B | 148.2/71.8 |
| C206 | 4030009970 | S.CER | C1608 JB 1H 182K-T | T | 192/33.4 |
| C207 | 4030009970 | S.CER | C1608 JB 1H 182K-T | T | 181.1/33.6 |
| C208 | 4030011600 | S.CER | C1608 JB 1E 104K-T | T | 219/42.5 |
| C209 | 4030011600 | S.CER | C1608 JB 1E 104K-T | B | 244/25.5 |
| C210 | 4510008550 | S.ELE | EEE1HA010SR | T | 168.1/100.5 |
| C211 | 4510008540 | S.ELE | EEE1CA100SR | T | 160.5/84.8 |
| C212 | 4510008530 | S.ELE | EEE1HA2R2SR | T | 169.7/94.9 |
| C213 | 4030017840 | S.CER | C2012 CH 1H 222J-T | T | 166.7/91.5 |
| C214 | 4510008540 | S.ELE | EEE1CA100SR | T | 170.6/85.3 |
| C215 | 4510008550 | S.ELE | EEE1HA010SR | T | 150.5/85.3 |
| C216 | 4510008550 | S.ELE | EEE1HA010SR | T | 142.6/85.3 |
| C217 | 4030007120 | S.CER | C1608 CH 1H 820J-T | T | 164.9/73.5 |
| C220 | 4510008550 | S.ELE | EEE1HA010SR | T | 163.3/100.5 |
| C221 | 4510008540 | S.ELE | EEE1CA100SR | T | 170.6/90.1 |
| C222 | 4510008530 | S.ELE | EEE1HA2R2SR | T | 151.3/94.9 |
| C223 | 4030017840 | S.CER | C2012 CH 1H 222J-T | T | 154.3/91.5 |
| C225 | 4510008550 | S.ELE | EEE1HA010SR | T | 150.5/90.1 |
| C226 | 4510008550 | S.ELE | EEE1HA010SR | T | 142.6/90.2 |
| C230 | 4510008500 | S.ELE | EEE1CA101WP | T | 68.9/10.5 |
| C231 | 4510008500 | S.ELE | EEE1CA101WP | T | 84.1/21.9 |
| C233 | 4510008550 | S.ELE | EEE1HA010SR | T | 69.8/16.5 |
| C234 | 4030007170 | S.CER | C1608 CH 1H 221J-T | T | 73/20.3 |
| C235 | 4030011600 | S.CER | C1608 JB 1E 104K-T | T | 79.1/22 |
| C241 | 4510008540 | S.ELE | EEE1CA100SR | T | 232.1/28.1 |
| C242 | 4510004591 | ELE | 16 ME 470 HC | | |
| C243 | 4510008500 | S.ELE | EEE1CA101WP | T | 176.7/63 |
| C244 | 4030011600 | S.CER | C1608 JB 1E 104K-T | T | 176/56.8 |
| C249 | 4030011600 | S.CER | C1608 JB 1E 104K-T | T | 160.3/68.3 |
| C250 | 4030011600 | S.CER | C1608 JB 1E 104K-T | T | 133.1/39.1 |
| C251 | 4030011600 | S.CER | C1608 JB 1E 104K-T | T | 143.3/32.8 |
| C260 | 4030011600 | S.CER | C1608 JB 1E 104K-T | T | 133.1/53.5 |
| C261 | 4030011600 | S.CER | C1608 JB 1E 104K-T | T | 143.2/47.1 |

M.=Mounted side (T: Mounted on the Top side, B: Mounted on the Bottom side)
S.=Surface mount

## [MAIN UNIT]

| REF NO. | PARTS NO. | DESCRIPTION | M. | H/V LOCATION |
|---|---|---|---|---|
| C290 | 4030011600 | S.CER C1608 JB 1E 104K-T | T | 149.1/28.2 |
| C291 | 4030011600 | S.CER C1608 JB 1E 104K-T | T | 142.9/38.1 |
| C310 | 4030011600 | S.CER C1608 JB 1E 104K-T | T | 153.7/43.3 |
| C311 | 4030011600 | S.CER C1608 JB 1E 104K-T | T | 142.9/52.6 |
| C330 | 4030011600 | S.CER C1608 JB 1E 104K-T | T | 154.6/58.5 |
| C331 | 4030011600 | S.CER C1608 JB 1E 104K-T | T | 154.6/63.5 |
| C332 | 4030011600 | S.CER C1608 JB 1E 104K-T | T | 162.4/55.9 |
| C333 | 4030011600 | S.CER C1608 JB 1E 104K-T | T | 164.7/66.8 |
| C340 | 4030017810 | S.CER C1608 CH 1H 102J-T | B | 206/97 |
| C341 | 4030017810 | S.CER C1608 CH 1H 102J-T | B | 191.2/97 |
| C342 | 4030011600 | S.CER C1608 JB 1E 104K-T | B | 199.8/26.2 |
| C343 | 4030007130 | S.CER C1608 CH 1H 101J-T | B | 211.8/97 |
| C344 | 4510008590 | S.ELE EEE1AA101SP | T | 209.7/30.6 |
| C351 | 4510008540 | S.ELE EEE1CA100SR | T | 132.4/89.7 |
| C352 | 4030011600 | S.CER C1608 JB 1E 104K-T | T | 127.1/84 |
| C360 | 4030017810 | S.CER C1608 CH 1H 102J-T | B | 153.8/96.9 |
| C361 | 4030017810 | S.CER C1608 CH 1H 102J-T | B | 141.8/92.7 |
| C362 | 4030011600 | S.CER C1608 JB 1E 104K-T | B | 144.7/27.5 |
| C363 | 4030007130 | S.CER C1608 CH 1H 101J-T | B | 157.1/96.9 |
| C364 | 4510008590 | S.ELE EEE1AA101SP | T | 152.8/14.7 |
| C380 | 4030017810 | S.CER C1608 CH 1H 102J-T | B | 27.6/37.6 |
| C381 | 4030017810 | S.CER C1608 CH 1H 102J-T | B | 27.7/52.4 |
| C383 | 4030007130 | S.CER C1608 CH 1H 101J-T | B | 16.5/52.2 |
| C384 | 4510008590 | S.ELE EEE1AA101SP | T | 92.9/45.8 |
| C400 | 4030006880 | S.CER C1608 JB 1H 472K-T | T | 240.5/11.7 |
| C401 | 4030006880 | S.CER C1608 JB 1H 472K-T | B | 234.8/15.5 |
| C402 | 4030006880 | S.CER C1608 JB 1H 472K-T | B | 238.1/15.5 |
| C403 | 4030006880 | S.CER C1608 JB 1H 472K-T | T | 230.5/16 |
| C404 | 4030006880 | S.CER C1608 JB 1H 472K-T | T | 231.9/13.1 |
| C405 | 4030006880 | S.CER C1608 JB 1H 472K-T | T | 43.2/12.9 |
| C406 | 4030006880 | S.CER C1608 JB 1H 472K-T | T | 31.1/15.3 |
| C407 | 4030006880 | S.CER C1608 JB 1H 472K-T | T | 43.2/11.6 |
| C408 | 4030006880 | S.CER C1608 JB 1H 472K-T | T | 32/12.6 |
| C409 | 4030006880 | S.CER C1608 JB 1H 472K-T | T | 30.7/12.6 |
| C410 | 4030006880 | S.CER C1608 JB 1H 472K-T | T | 14.7/41 |
| C411 | 4030006880 | S.CER C1608 JB 1H 472K-T | B | 14.7/39.6 |
| C412 | 4030006880 | S.CER C1608 JB 1H 472K-T | T | 14.7/38 |
| C413 | 4030006880 | S.CER C1608 JB 1H 472K-T | B | 14.7/36.4 |
| C414 | 4030006880 | S.CER C1608 JB 1H 472K-T | B | 12.7/33 |
| C415 | 4030006880 | S.CER C1608 JB 1H 472K-T | T | 12.8/32 |
| C416 | 4030006880 | S.CER C1608 JB 1H 472K-T | B | 12.8/31 |
| C418 | 4030006880 | S.CER C1608 JB 1H 472K-T | B | 12/28.2 |
| C430 | 4030006880 | S.CER C1608 JB 1H 472K-T | B | 9/68.9 |
| C431 | 4030006880 | S.CER C1608 JB 1H 472K-T | B | 9/70.9 |
| C432 | 4030006880 | S.CER C1608 JB 1H 472K-T | B | 9/72.9 |
| C435 | 4030006880 | S.CER C1608 JB 1H 472K-T | B | 9/74.5 |
| C440 | 4030006880 | S.CER C1608 JB 1H 472K-T | T | 166.2/13.5 |
| C441 | 4030006880 | S.CER C1608 JB 1H 472K-T | T | 158.9/13.1 |
| C442 | 4030006880 | S.CER C1608 JB 1H 472K-T | T | 162.6/15.7 |
| C450 | 4030006880 | S.CER C1608 JB 1H 472K-T | B | 250.3/14.2 |
| C451 | 4030006880 | S.CER C1608 JB 1H 472K-T | T | 241.8/10.8 |
| C452 | 4030006880 | S.CER C1608 JB 1H 472K-T | B | 244/23.7 |
| C453 | 4030006880 | S.CER C1608 JB 1H 472K-T | B | 244/27.3 |
| C454 | 4030006880 | S.CER C1608 JB 1H 472K-T | B | 244.1/29 |
| C455 | 4030006880 | S.CER C1608 JB 1H 472K-T | B | 244.1/32.3 |
| C456 | 4030006880 | S.CER C1608 JB 1H 472K-T | B | 250.4/39.6 |
| C460 | 4510008550 | S.ELE EEE1HA010SR | T | 142.1/80.5 |
| C461 | 4510008550 | S.ELE EEE1HA010SR | T | 170.6/75.7 |
| C464 | 4510008540 | S.ELE EEE1CA100SR | T | 153.3/75.7 |
| C465 | 4030011600 | S.CER C1608 JB 1E 104K-T | B | 144.1/75.4 |
| C466 | 4030011600 | S.CER C1608 JB 1E 104K-T | B | 148.2/75.4 |
| C467 | 4030012600 | S.CER C2012 JB 1A 105M-T | T | 139.3/76.4 |
| C469 | 4510008550 | S.ELE EEE1HA010SR | T | 170.6/80.5 |
| C470 | 4510008550 | S.ELE EEE1HA010SR | T | 153.3/70.9 |
| C480 | 4550007320 | S.TAN F930J226MAABMA | B | 216.6/32.3 |
| C481 | 4550007320 | S.TAN F930J226MAABMA | B | 208.7/31.3 |
| C483 | 4550007320 | S.TAN F930J226MAABMA | B | 156/16.2 |
| C484 | 4550007320 | S.TAN F930J226MAABMA | B | 163.9/15.2 |
| C486 | 4550007320 | S.TAN F930J226MAABMA | B | 93.6/55.4 |
| C487 | 4550007320 | S.TAN F930J226MAABMA | B | 93.5/47.5 |
| C489 | 4030011600 | S.CER C1608 JB 1E 104K-T | B | 220.9/31.1 |
| C490 | 4030011600 | S.CER C1608 JB 1E 104K-T | B | 150.2/13.6 |
| C491 | 4030011600 | S.CER C1608 JB 1E 104K-T | B | 89.8/57 |
| C492 | 4030006880 | S.CER C1608 JB 1H 472K-T | T | 207.6/13 |
| C493 | 4510008540 | S.ELE EEE1CA100SR | T | 205.4/3.8 |
| C494 | 4510004591 | ELE 16 ME 470 HC | | |
| C495 | 4030011600 | S.CER C1608 JB 1E 104K-T | B | 26.3/123 |
| C496 | 4030011600 | S.CER C1608 JB 1E 104K-T | B | 5.7/119.9 |
| C497 | 4030011600 | S.CER C1608 JB 1E 104K-T | T | 12.7/122.5 |
| C498 | 4510004591 | ELE 16 ME 470 HC | | |
| C499 | 4030011600 | S.CER C1608 JB 1E 104K-T | B | 229.4/26.6 |
| C501 | 4030011600 | S.CER C1608 JB 1E 104K-T | T | 19.2/58.3 |
| C502 | 4030010020 | S.CER C1608 JB 1H 122K-T | T | 23.7/58.3 |
| C503 | 4030009980 | S.CER C1608 JB 1H 152K-T | T | 22.2/60.9 |
| C505 | 4030011330 | S.CER C1608 CH 1H 391J-T | T | 25.2/58.3 |
| C506 | 4030011600 | S.CER C1608 JB 1E 104K-T | T | 26/64.4 |
| C507 | 4510008540 | S.ELE EEE1CA100SR | T | 29.1/66.3 |
| C508 | 4510008540 | S.ELE EEE1CA100SR | T | 16.1/66.3 |
| C509 | 4030011600 | S.CER C1608 JB 1E 104K-T | T | 19.2/66.5 |
| C510 | 4030008470 | S.CER C1608 JB 1H 272K-T | T | 20.7/72.4 |
| C511 | 4030011280 | S.CER C1608 CH 1H 271J-T | T | 25.2/72.4 |
| C512 | 4030011600 | S.CER C1608 JB 1E 104K-T | T | 26/76.8 |
| C513 | 4510008540 | S.ELE EEE1CA100SR | T | 29.1/77.7 |
| C514 | 4030011600 | S.CER C1608 JB 1E 104K-T | T | 19.2/78.4 |
| C515 | 4510008540 | S.ELE EEE1CA100SR | T | 16.1/78.2 |
| C516 | 4030006860 | S.CER C1608 JB 1H 102K-T | T | 22.7/87.5 |
| C517 | 4030011600 | S.CER C1608 JB 1E 104K-T | T | 20.3/91.9 |
| C518 | 4030011600 | S.CER C1608 JB 1E 104K-T | T | 25.3/87.5 |
| C519 | 4030011600 | S.CER C1608 JB 1E 104K-T | T | 26.6/87.5 |
| C520 | 4510008540 | S.ELE EEE1CA100SR | T | 30.4/86.7 |
| C521 | 4030011600 | S.CER C1608 JB 1E 104K-T | T | 24/87.5 |
| C522 | 4030011600 | S.CER C1608 JB 1E 104K-T | B | 18.6/91.9 |
| C523 | 4030011600 | S.CER C1608 JB 1E 104K-T | B | 21.6/91.9 |
| C524 | 4510008540 | S.ELE EEE1CA100SR | T | 29.7/97 |
| C525 | 4030006880 | S.CER C1608 JB 1H 472K-T | T | 26.1/91.9 |

## [MAIN UNIT]

| REF NO. | PARTS NO. | DESCRIPTION | M. | H/V LOCATION |
|---|---|---|---|---|
| C526 | 4030011600 | S.CER C1608 JB 1E 104K-T | B | 26.1/87.7 |
| C527 | 4030006880 | S.CER C1608 JB 1H 472K-T | B | 29.5/91.9 |
| C528 | 4030011600 | S.CER C1608 JB 1E 104K-T | B | 29.5/94.9 |
| C529 | 4030011600 | S.CER C1608 JB 1E 104K-T | B | 33.5/87.1 |
| C530 | 4030011600 | S.CER C1608 JB 1E 104K-T | B | 33.5/98.8 |
| C531 | 4030006880 | S.CER C1608 JB 1H 472K-T | B | 37.2/94.6 |
| C532 | 4030006880 | S.CER C1608 JB 1H 472K-T | B | 37.2/91.3 |
| C533 | 4030006880 | S.CER C1608 JB 1H 472K-T | B | 46.3/95.1 |
| C534 | 4030006880 | S.CER C1608 JB 1H 472K-T | B | 46.3/82 |
| C535 | 4030006880 | S.CER C1608 JB 1H 472K-T | B | 47.3/88.5 |
| C536 | 4030011600 | S.CER C1608 JB 1E 104K-T | B | 42.7/91.4 |
| C537 | 4030006880 | S.CER C1608 JB 1H 472K-T | B | 51.7/82 |
| C538 | 4030008920 | S.CER C1608 JB 1H 473K-T | B | 50.5/85.7 |
| C539 | 4030011600 | S.CER C1608 JB 1E 104K-T | T | 52.2/84.4 |
| C540 | 4510008540 | S.ELE EEE1CA100SR | T | 49.1/84.5 |
| C541 | 4030011600 | S.CER C1608 JB 1E 104K-T | B | 49.9/95.1 |
| C544 | 4030009530 | S.CER C1608 CH 1H 030B-T | T | 88.8/94.2 |
| C545 | 4030011600 | S.CER C1608 JB 1E 104K-T | T | 131.8/108 |
| C546 | 4030011340 | S.CER C1608 CH 1H 471J-T | B | 69.8/90.7 |
| C548 | 4030011600 | S.CER C1608 JB 1E 104K-T | T | 128.7/102.3 |
| C550 | 4510008540 | S.ELE EEE1CA100SR | T | 127.4/108 |
| C551 | 4030006880 | S.CER C1608 JB 1H 472K-T | B | 101.6/91.6 |
| C552 | 4030006860 | S.CER C1608 JB 1H 102K-T | B | 106.4/82.7 |
| C553 | 4030011770 | S.CER C1608 CH 1H 060B-T | B | 104.8/82.7 |
| C554 | 4030011600 | S.CER C1608 JB 1E 104K-T | B | 103/79.3 |
| C555 | 4030007030 | S.CER C1608 CH 1H 150J-T | B | 97.9/80.1 |
| C556 | 4030006880 | S.CER C1608 JB 1H 472K-T | B | 102.9/76.5 |
| C558 | 4030007040 | S.CER C1608 CH 1H 180J-T | T | 81.9/69.4 |
| C559 | 4030006880 | S.CER C1608 JB 1H 472K-T | T | 108.4/67.1 |
| C560 | 4030007080 | S.CER C1608 CH 1H 390J-T | T | 108.4/64.2 |
| C561 | 4030006880 | S.CER C1608 JB 1H 472K-T | T | 105/71.3 |
| C562 | 4030006860 | S.CER C1608 JB 1H 102K-T | B | 105.6/64.2 |
| C563 | 4030011600 | S.CER C1608 JB 1E 104K-T | T | 98.8/71.3 |
| C564 | 4030007080 | S.CER C1608 CH 1H 390J-T | B | 75.9/67.2 |
| C565 | 4030007130 | S.CER C1608 CH 1H 101J-T | B | 72.5/68.9 |
| C566 | 4030007120 | S.CER C1608 CH 1H 820J-T | B | 69.4/68.5 |
| C567 | 4030007090 | S.CER C1608 CH 1H 470J-T | B | 69.4/70.3 |
| C568 | 4030007130 | S.CER C1608 CH 1H 101J-T | B | 67.1/69.1 |
| C569 | 4030011600 | S.CER C1608 JB 1E 104K-T | B | 62.8/68.1 |
| C570 | 4030006900 | S.CER C1608 JB 1H 103K-T | B | 62.9/59.2 |
| C571 | 4030011600 | S.CER C1608 JB 1E 104K-T | B | 58.8/66 |
| C572 | 4030006900 | S.CER C1608 JB 1H 103K-T | B | 60/58.4 |
| C573 | 4030011600 | S.CER C1608 JB 1E 104K-T | B | 66.7/59.2 |
| C574 | 4030011600 | S.CER C1608 JB 1E 104K-T | B | 53.3/57 |
| C576 | 4610001590 | S.TRI TZC3R100A110R00 | T | 95.5/95.8 |
| C577 | 4030011600 | S.CER C1608 JB 1E 104K-T | B | 54.6/63 |
| C578 | 4030007100 | S.CER C1608 CH 1H 560J-T | B | 91.4/74.5 |
| C579 | 4030006980 | S.CER C1608 CH 1H 070D-T | B | 89.2/76.8 |
| C580 | 4030007100 | S.CER C1608 CH 1H 560J-T | B | 93.2/76.5 |
| C581 | 4030007050 | S.CER C1608 CH 1H 220J-T | B | 22.6/69.5 |
| C582 | 4030007050 | S.CER C1608 CH 1H 220J-T | T | 20.7/84.6 |
| C583 | 4030011600 | S.CER C1608 JB 1E 104K-T | T | 27.2/81.6 |
| C584 | 4030009650 | S.CER C1608 CH 1H 240J-T | B | 104.5/67.3 |
| C585 | 4030006980 | S.CER C1608 CH 1H 070D-T | B | 102.9/67.3 |
| C586 | 4030007070 | S.CER C1608 CH 1H 330J-T | B | 98.5/70.2 |
| C587 | 4030007010 | S.CER C1608 CH 1H 100D-T | B | 97/64.9 |
| C588 | 4030007060 | S.CER C1608 CH 1H 270J-T | B | 96.5/70.2 |
| C589 | 4030007020 | S.CER C1608 CH 1H 120J-T | B | 63.8/72.8 |
| C590 | 4030007100 | S.CER C1608 CH 1H 560J-T | B | 62.1/74.5 |
| C601 | 4030006860 | S.CER C1608 JB 1H 102K-T | B | 40.9/52.4 |
| C602 | 4030006860 | S.CER C1608 JB 1H 102K-T | B | 42.7/52.4 |
| C603 | 4030011600 | S.CER C1608 JB 1E 104K-T | B | 40.9/49.1 |
| C604 | 4030007140 | S.CER C1608 CH 1H 121J-T | B | 38.1/49.8 |
| C605 | 4030010760 | S.CER C1608 CH 1H 331J-T | B | 38.1/48 |
| C606 | 4030007160 | S.CER C1608 CH 1H 181J-T | B | 33.8/45.5 |
| C607 | 4030007060 | S.CER C1608 CH 1H 270J-T | B | 35.6/45.5 |
| C608 | 4030010760 | S.CER C1608 CH 1H 331J-T | B | 38.1/46.2 |
| C609 | 4030007090 | S.CER C1608 CH 1H 470J-T | B | 38.1/40.8 |
| C610 | 4030007160 | S.CER C1608 CH 1H 181J-T | B | 35.6/41.5 |
| C611 | 4030007060 | S.CER C1608 CH 1H 270J-T | B | 33.8/41.5 |
| C612 | 4030007140 | S.CER C1608 CH 1H 121J-T | B | 38.1/37.1 |
| C613 | 4030010760 | S.CER C1608 CH 1H 331J-T | B | 38.1/39 |
| C614 | 4030006860 | S.CER C1608 JB 1H 102K-T | B | 40.9/34.5 |
| C615 | 4030011600 | S.CER C1608 JB 1E 104K-T | B | 40.9/37.8 |
| C616 | 4030006860 | S.CER C1608 JB 1H 102K-T | B | 42.7/34.5 |
| C617 | 4030010040 | S.CER C1608 JB 1H 561K-T | B | 51.7/52.4 |
| C618 | 4030010760 | S.CER C1608 CH 1H 331J-T | B | 53.5/52.4 |
| C619 | 4030011600 | S.CER C1608 JB 1E 104K-T | B | 51.7/49.1 |
| C620 | 4030010760 | S.CER C1608 CH 1H 331J-T | B | 48.9/49.8 |
| C621 | 4030007080 | S.CER C1608 CH 1H 390J-T | B | 48.9/48 |
| C622 | 4030007080 | S.CER C1608 CH 1H 390J-T | B | 44.5/45.5 |
| C623 | 4030010760 | S.CER C1608 CH 1H 331J-T | B | 46.4/45.5 |
| C624 | 4030007090 | S.CER C1608 CH 1H 470J-T | B | 48.9/46.2 |
| C625 | 4030010760 | S.CER C1608 CH 1H 331J-T | B | 48.9/40.8 |
| C626 | 4030007080 | S.CER C1608 CH 1H 390J-T | B | 46.4/41.5 |
| C627 | 4030010760 | S.CER C1608 CH 1H 331J-T | B | 44.6/41.5 |
| C628 | 4030007080 | S.CER C1608 CH 1H 390J-T | B | 48.9/37.1 |
| C629 | 4030010760 | S.CER C1608 CH 1H 331J-T | B | 48.9/39 |
| C630 | 4030010760 | S.CER C1608 CH 1H 331J-T | B | 51.7/34.5 |
| C631 | 4030011600 | S.CER C1608 JB 1E 104K-T | B | 51.7/37.8 |
| C632 | 4030010040 | S.CER C1608 JB 1H 561K-T | B | 53.5/34.5 |
| C633 | 4030010040 | S.CER C1608 JB 1H 561K-T | B | 62.5/52.4 |
| C634 | 4030011330 | S.CER C1608 CH 1H 391J-T | B | 64.3/52.4 |
| C635 | 4030011600 | S.CER C1608 JB 1E 104K-T | B | 62.5/49.1 |
| C636 | 4030007160 | S.CER C1608 CH 1H 181J-T | B | 59.7/49.8 |
| C637 | 4030007070 | S.CER C1608 CH 1H 330J-T | B | 59.7/48 |
| C638 | 4030007030 | S.CER C1608 CH 1H 150J-T | B | 55.4/45.5 |
| C639 | 4030007120 | S.CER C1608 CH 1H 820J-T | B | 57.2/45.5 |
| C640 | 4030007100 | S.CER C1608 CH 1H 560J-T | B | 59.7/46.2 |
| C641 | 4030007140 | S.CER C1608 CH 1H 121J-T | B | 59.7/40.8 |
| C642 | 4030007030 | S.CER C1608 CH 1H 150J-T | B | 57.2/41.5 |
| C643 | 4030007120 | S.CER C1608 CH 1H 820J-T | B | 55.4/41.5 |
| C644 | 4030007070 | S.CER C1608 CH 1H 330J-T | B | 59.7/37.1 |
| C645 | 4030007160 | S.CER C1608 CH 1H 181J-T | B | 59.7/39 |
| C646 | 4030011330 | S.CER C1608 CH 1H 391J-T | B | 62.5/34.5 |

M.=Mounted side (T: Mounted on the Top side, B: Mounted on the Bottom side)
S.=Surface mount

## [MAIN UNIT]

| REF NO. | PARTS NO. | DESCRIPTION | M. | H/V LOCATION |
|---|---|---|---|---|
| C647 | 4030011600 | S.CER C1608 JB 1E 104K-T | B | 62.5/37.8 |
| C648 | 4030017800 | S.CER C1608 CH 1H 561J-T | B | 64.3/34.5 |
| C649 | 4030010760 | S.CER C1608 CH 1H 331J-T | B | 73.4/52.4 |
| C650 | 4030007150 | S.CER C1608 CH 1H 151J-T | B | 75.2/52.4 |
| C651 | 4030011600 | S.CER C1608 JB 1E 104K-T | B | 73.4/49.1 |
| C652 | 4030007150 | S.CER C1608 CH 1H 151J-T | B | 70.5/49.8 |
| C653 | 4030007060 | S.CER C1608 CH 1H 270J-T | B | 70.5/48 |
| C654 | 4030007060 | S.CER C1608 CH 1H 270J-T | B | 66.2/45.5 |
| C655 | 4030007140 | S.CER C1608 CH 1H 121J-T | B | 68/45.5 |
| C656 | 4030007010 | S.CER C1608 CH 1H 100D-T | B | 70.5/46.2 |
| C657 | 4030007150 | S.CER C1608 CH 1H 151J-T | B | 70.5/40.8 |
| C658 | 4030007060 | S.CER C1608 CH 1H 270J-T | B | 68/41.5 |
| C659 | 4030007140 | S.CER C1608 CH 1H 121J-T | B | 66.2/41.5 |
| C660 | 4030007060 | S.CER C1608 CH 1H 270J-T | B | 70.5/37.1 |
| C661 | 4030007150 | S.CER C1608 CH 1H 151J-T | B | 70.5/39 |
| C662 | 4030007150 | S.CER C1608 CH 1H 151J-T | B | 73.3/34.5 |
| C663 | 4030011600 | S.CER C1608 JB 1E 104K-T | B | 73.3/37.8 |
| C664 | 4030010760 | S.CER C1608 CH 1H 331J-T | B | 75.2/34.5 |
| C665 | 4030007170 | S.CER C1608 CH 1H 221J-T | B | 84.2/52.4 |
| C666 | 4030007170 | S.CER C1608 CH 1H 221J-T | B | 86/52.4 |
| C667 | 4030011600 | S.CER C1608 JB 1E 104K-T | B | 84.2/49.1 |
| C668 | 4030007130 | S.CER C1608 CH 1H 101J-T | B | 81.4/49.8 |
| C669 | 4030007050 | S.CER C1608 CH 1H 220J-T | B | 81.4/48 |
| C670 | 4030007080 | S.CER C1608 CH 1H 390J-T | B | 77.1/45.5 |
| C671 | 4030007070 | S.CER C1608 CH 1H 330J-T | B | 78.9/45.5 |
| C672 | 4030007050 | S.CER C1608 CH 1H 220J-T | B | 81.4/40.8 |
| C673 | 4030007120 | S.CER C1608 CH 1H 820J-T | B | 81.4/46.2 |
| C674 | 4030007080 | S.CER C1608 CH 1H 390J-T | B | 78.9/41.5 |
| C675 | 4030007070 | S.CER C1608 CH 1H 330J-T | B | 77.1/41.5 |
| C676 | 4030007050 | S.CER C1608 CH 1H 220J-T | B | 81.4/37.1 |
| C677 | 4030007130 | S.CER C1608 CH 1H 101J-T | B | 81.4/39 |
| C678 | 4030007170 | S.CER C1608 CH 1H 221J-T | B | 84.2/34.5 |
| C679 | 4030011600 | S.CER C1608 JB 1E 104K-T | B | 84.2/37.8 |
| C680 | 4030007170 | S.CER C1608 CH 1H 221J-T | B | 86/34.5 |
| C681 | 4030007170 | S.CER C1608 CH 1H 221J-T | T | 34.3/50.7 |
| C682 | 4030007110 | S.CER C1608 CH 1H 680J-T | T | 35.6/50.7 |
| C683 | 4030011600 | S.CER C1608 JB 1E 104K-T | T | 35.6/47.9 |
| C684 | 4030007090 | S.CER C1608 CH 1H 470J-T | T | 38.3/47.1 |
| C685 | 4030007090 | S.CER C1608 CH 1H 470J-T | T | 38.3/45.8 |
| C686 | 4030007070 | S.CER C1608 CH 1H 330J-T | T | 40.4/46.4 |
| C687 | 4030007070 | S.CER C1608 CH 1H 330J-T | T | 41.7/46.4 |
| C688 | 4030007010 | S.CER C1608 CH 1H 100D-T | T | 36.1/43.5 |
| C689 | 4030007120 | S.CER C1608 CH 1H 820J-T | T | 37.4/43.5 |
| C690 | 4030007070 | S.CER C1608 CH 1H 330J-T | T | 41.7/40.5 |
| C691 | 4030007070 | S.CER C1608 CH 1H 330J-T | T | 40.4/40.5 |
| C692 | 4030007090 | S.CER C1608 CH 1H 470J-T | T | 37.8/41 |
| C693 | 4030007090 | S.CER C1608 CH 1H 470J-T | T | 37.8/39.7 |
| C694 | 4030007110 | S.CER C1608 CH 1H 680J-T | T | 34.3/36.2 |
| C695 | 4030011600 | S.CER C1608 JB 1E 104K-T | T | 35.6/39 |
| C696 | 4030007050 | S.CER C1608 CH 1H 220J-T | T | 35.6/36.2 |
| C697 | 4030007160 | S.CER C1608 CH 1H 181J-T | T | 44/51.4 |
| C698 | 4030007090 | S.CER C1608 CH 1H 470J-T | T | 44/50.1 |
| C699 | 4030011600 | S.CER C1608 JB 1E 104K-T | T | 44.6/47.9 |
| C700 | 4030007090 | S.CER C1608 CH 1H 470J-T | T | 46.8/47.1 |
| C701 | 4030007040 | S.CER C1608 CH 1H 180J-T | T | 46.8/45.8 |
| C702 | 4030007030 | S.CER C1608 CH 1H 150J-T | T | 49.3/46.4 |
| C703 | 4030007050 | S.CER C1608 CH 1H 220J-T | T | 50.7/46.4 |
| C704 | 4030006990 | S.CER C1608 CH 1H 080D-T | T | 46.4/43.5 |
| C705 | 4030007090 | S.CER C1608 CH 1H 470J-T | T | 45.1/43.5 |
| C706 | 4030007030 | S.CER C1608 CH 1H 150J-T | T | 49.3/40.5 |
| C707 | 4030007050 | S.CER C1608 CH 1H 220J-T | T | 50.7/40.5 |
| C708 | 4030007040 | S.CER C1608 CH 1H 180J-T | T | 46.8/41 |
| C709 | 4030007090 | S.CER C1608 CH 1H 470J-T | T | 46.8/39.7 |
| C710 | 4030007090 | S.CER C1608 CH 1H 470J-T | T | 43.3/36.2 |
| C711 | 4030011600 | S.CER C1608 JB 1E 104K-T | T | 44.6/39 |
| C712 | 4030007160 | S.CER C1608 CH 1H 181J-T | T | 44.6/36.2 |
| C713 | 4030007140 | S.CER C1608 CH 1H 121J-T | T | 53.6/50.7 |
| C714 | 4030007040 | S.CER C1608 CH 1H 180J-T | T | 52.3/50.7 |
| C715 | 4030011600 | S.CER C1608 JB 1E 104K-T | T | 53.6/47.9 |
| C716 | 4030007070 | S.CER C1608 CH 1H 330J-T | T | 55.8/47.1 |
| C717 | 4030007040 | S.CER C1608 CH 1H 180J-T | T | 55.8/45.8 |
| C718 | 4030007010 | S.CER C1608 CH 1H 100D-T | T | 58.4/46.4 |
| C719 | 4030007070 | S.CER C1608 CH 1H 330J-T | T | 59.7/46.4 |
| C720 | 4030007010 | S.CER C1608 CH 1H 100D-T | T | 54.1/43.5 |
| C721 | 4030007090 | S.CER C1608 CH 1H 470J-T | T | 55.4/43.5 |
| C722 | 4030007010 | S.CER C1608 CH 1H 100D-T | T | 58.4/40.5 |
| C723 | 4030007070 | S.CER C1608 CH 1H 330J-T | T | 59.7/40.5 |
| C724 | 4030007040 | S.CER C1608 CH 1H 180J-T | T | 55.8/41 |
| C725 | 4030007070 | S.CER C1608 CH 1H 330J-T | T | 55.8/39.7 |
| C726 | 4030007040 | S.CER C1608 CH 1H 180J-T | T | 52.3/36.2 |
| C727 | 4030011600 | S.CER C1608 JB 1E 104K-T | T | 53.6/39 |
| C728 | 4030007140 | S.CER C1608 CH 1H 121J-T | T | 53.6/36.2 |
| C729 | 4030007130 | S.CER C1608 CH 1H 101J-T | T | 62.6/50.7 |
| C730 | 4030007030 | S.CER C1608 CH 1H 150J-T | T | 61.3/50.7 |
| C731 | 4030011600 | S.CER C1608 JB 1E 104K-T | T | 62.6/47.9 |
| C732 | 4030007050 | S.CER C1608 CH 1H 220J-T | T | 64.8/47.1 |
| C733 | 4030007020 | S.CER C1608 CH 1H 120J-T | T | 64.8/45.8 |
| C734 | 4030009500 | S.CER C1608 CH 1H 0R5B-T | T | 67.4/46.4 |
| C735 | 4030007050 | S.CER C1608 CH 1H 220J-T | T | 68.7/46.4 |
| C736 | 4030006980 | S.CER C1608 CH 1H 070D-T | T | 63.1/43.5 |
| C737 | 4030007050 | S.CER C1608 CH 1H 220J-T | T | 64.4/43.5 |
| C738 | 4030009500 | S.CER C1608 CH 1H 0R5B-T | T | 67.4/40.5 |
| C739 | 4030007050 | S.CER C1608 CH 1H 220J-T | T | 68.7/40.5 |
| C740 | 4030007020 | S.CER C1608 CH 1H 120J-T | T | 64.8/41 |
| C741 | 4030007050 | S.CER C1608 CH 1H 220J-T | T | 64.8/39.7 |
| C742 | 4030007030 | S.CER C1608 CH 1H 150J-T | T | 61.3/36.2 |
| C743 | 4030011600 | S.CER C1608 JB 1E 104K-T | T | 62.6/39 |
| C744 | 4030007130 | S.CER C1608 CH 1H 101J-T | T | 62.6/36.2 |
| C745 | 4030007140 | S.CER C1608 CH 1H 121J-T | T | 73.5/49.6 |
| C747 | 4030011600 | S.CER C1608 JB 1E 104K-T | T | 71.5/48.8 |
| C749 | 4030009550 | S.CER C1608 CH 1H 2R5B-T | T | 75.9/46.2 |
| C750 | 4030011770 | S.CER C1608 CH 1H 060B-T | T | 73.8/46.9 |
| C751 | 4030007010 | S.CER C1608 CH 1H 100D-T | T | 73.8/45.5 |
| C755 | 4030009550 | S.CER C1608 CH 1H 2R5B-T | T | 75.9/41 |
| C756 | 4030011770 | S.CER C1608 CH 1H 060B-T | T | 73.8/40.2 |

## [MAIN UNIT]

| REF NO. | PARTS NO. | DESCRIPTION | M. | H/V LOCATION |
|---|---|---|---|---|
| C758 | 4030011600 | S.CER C1608 JB 1E 104K-T | T | 71.5/38.1 |
| C759 | 4030007140 | S.CER C1608 CH 1H 121J-T | T | 73.5/37.3 |
| C760 | 4030011770 | S.CER C1608 CH 1H 060B-T | T | 73.8/48.2 |
| C761 | 4030011770 | S.CER C1608 CH 1H 060B-T | T | 73.8/41.8 |
| C801 | 4030006880 | S.CER C1608 JB 1H 472K-T | T | 37.2/20.6 |
| C802 | 4030011600 | S.CER C1608 JB 1E 104K-T | T | 37.2/27.5 |
| C803 | 4030011600 | S.CER C1608 JB 1E 104K-T | B | 37.2/20.5 |
| C804 | 4030011600 | S.CER C1608 JB 1E 104K-T | T | 46.9/19.9 |
| C805 | 4030011600 | S.CER C1608 JB 1E 104K-T | B | 52/24.6 |
| C806 | 4030006900 | S.CER C1608 JB 1H 103K-T | B | 48.5/23.7 |
| C807 | 4030011600 | S.CER C1608 JB 1E 104K-T | T | 48.5/23.9 |
| C812 | 4030006900 | S.CER C1608 JB 1H 103K-T | B | 86.2/84.7 |
| C813 | 4030006880 | S.CER C1608 JB 1H 472K-T | T | 31.2/27.5 |
| C814 | 4030012600 | S.CER C2012 JB 1A 105M-T | T | 27.7/25.5 |
| C815 | 4030006990 | S.CER C1608 CH 1H 080D-T | B | 44.3/21 |
| C816 | 4030012600 | S.CER C2012 JB 1A 105M-T | T | 30.9/29 |
| C817 | 4030011330 | S.CER C1608 CH 1H 391J-T | T | 85.2/55.1 |
| C818 | 4030017810 | S.CER C1608 CH 1H 102J-T | T | 83.2/53.2 |
| C819 | 4030009920 | S.CER C1608 CH 1H 050B-T | T | 83.2/55.8 |
| C820 | 4030006900 | S.CER C1608 JB 1H 103K-T | T | 74.6/62.1 |
| C821 | 4030011600 | S.CER C1608 JB 1E 104K-T | T | 87.4/62.8 |
| C822 | 4030011600 | S.CER C1608 JB 1E 104K-T | T | 78.3/58.6 |
| C823 | 4030012600 | S.CER C2012 JB 1A 105M-T | T | 86.2/51.5 |
| C824 | 4030006900 | S.CER C1608 JB 1H 103K-T | T | 83.6/49.8 |
| C825 | 4030008880 | S.CER C1608 JB 1H 223K-T | T | 84.4/47.8 |
| C826 | 4030008850 | S.CER C1608 JB 1H 123K-T | T | 82.3/46.8 |
| C827 | 4030008850 | S.CER C1608 JB 1H 123K-T | T | 82.3/45.5 |
| C828 | 4030006900 | S.CER C1608 JB 1H 103K-T | T | 85.7/42.7 |
| C829 | 4030008860 | S.CER C1608 JB 1H 153K-T | T | 82.3/42.7 |
| C830 | 4030008860 | S.CER C1608 JB 1H 153K-T | T | 82.3/41.4 |
| C831 | 4030008650 | S.CER C1608 JB 1H 332K-T | T | 84.4/39.8 |
| C832 | 4030006900 | S.CER C1608 JB 1H 103K-T | T | 82.3/39.6 |
| C833 | 4030006900 | S.CER C1608 JB 1H 103K-T | T | 82.3/38.3 |
| C834 | 4030012600 | S.CER C2012 JB 1A 105M-T | T | 82.1/35.4 |
| C835 | 4030011600 | S.CER C1608 JB 1E 104K-T | T | 82.3/37 |
| C836 | 4030009920 | S.CER C1608 CH 1H 050B-T | T | 89.5/57.9 |
| C837 | 4550006470 | S.TAN TEESVB2 1D 106M8R | T | 72.9/58.7 |
| C838 | 4550006470 | S.TAN TEESVB2 1D 106M8R | T | 91.8/61.6 |
| C839 | 4030006880 | S.CER C1608 JB 1H 472K-T | B | 85.3/74.2 |
| C840 | 4030011600 | S.CER C1608 JB 1E 104K-T | B | 86/81.4 |
| C841 | 4030006880 | S.CER C1608 JB 1H 472K-T | B | 81.2/78.3 |
| C845 | 4030011600 | S.CER C1608 JB 1E 104K-T | T | 35.3/69.8 |
| C846 | 4030011600 | S.CER C1608 JB 1E 104K-T | T | 38.1/74.7 |
| C847 | 4510008540 | S.ELE EEE1CA100SR | T | 37.1/77.8 |
| C901 | 4030006880 | S.CER C1608 JB 1H 472K-T | B | 125.2/1.8 |
| C902 | 4030006880 | S.CER C1608 JB 1H 472K-T | T | 124.2/1.8 |
| C903 | 4030006880 | S.CER C1608 JB 1H 472K-T | B | 123.2/1.8 |
| C904 | 4030006880 | S.CER C1608 JB 1H 472K-T | T | 122.2/1.8 |
| C905 | 4030006880 | S.CER C1608 JB 1H 472K-T | B | 121.2/1.8 |
| C906 | 4030006880 | S.CER C1608 JB 1H 472K-T | T | 120.2/1.8 |
| C907 | 4030006880 | S.CER C1608 JB 1H 472K-T | B | 119.2/1.8 |
| C908 | 4030006880 | S.CER C1608 JB 1H 472K-T | T | 118.2/1.8 |
| C909 | 4030006880 | S.CER C1608 JB 1H 472K-T | B | 117.2/1.8 |
| C922 | 4030006880 | S.CER C1608 JB 1H 472K-T | T | 123.7/18.9 |
| C923 | 4030006880 | S.CER C1608 JB 1H 472K-T | B | 122.7/19.4 |
| C924 | 4030006880 | S.CER C1608 JB 1H 472K-T | T | 121.7/18.9 |
| C925 | 4030006880 | S.CER C1608 JB 1H 472K-T | B | 120.7/19.4 |
| C926 | 4030006880 | S.CER C1608 JB 1H 472K-T | T | 119.7/18.9 |
| C927 | 4030006880 | S.CER C1608 JB 1H 472K-T | B | 118.7/19.4 |
| C928 | 4030006880 | S.CER C1608 JB 1H 472K-T | T | 117.7/18.9 |
| C929 | 4030006880 | S.CER C1608 JB 1H 472K-T | B | 116.7/19.4 |
| C930 | 4030006880 | S.CER C1608 JB 1H 472K-T | T | 115.7/18.9 |
| C932 | 4030006880 | S.CER C1608 JB 1H 472K-T | T | 113.7/18.9 |
| C933 | 4030006880 | S.CER C1608 JB 1H 472K-T | B | 112.7/19.4 |
| C934 | 4030006880 | S.CER C1608 JB 1H 472K-T | T | 111.7/18.9 |
| C936 | 4030006880 | S.CER C1608 JB 1H 472K-T | T | 109.7/18.9 |
| C937 | 4030006880 | S.CER C1608 JB 1H 472K-T | B | 108.7/19.4 |
| C945 | 4030006880 | S.CER C1608 JB 1H 472K-T | B | 89.3/1.8 |
| C946 | 4030006880 | S.CER C1608 JB 1H 472K-T | T | 88.3/1.8 |
| C947 | 4030006880 | S.CER C1608 JB 1H 472K-T | B | 87.3/1.8 |
| C948 | 4030006880 | S.CER C1608 JB 1H 472K-T | T | 86.3/1.8 |
| C952 | 4030006880 | S.CER C1608 JB 1H 472K-T | T | 82.3/1.8 |
| C953 | 4030006880 | S.CER C1608 JB 1H 472K-T | B | 81.3/1.8 |
| C954 | 4030006880 | S.CER C1608 JB 1H 472K-T | T | 80.3/1.8 |
| C955 | 4030006880 | S.CER C1608 JB 1H 472K-T | B | 79.3/1.8 |
| C957 | 4030006880 | S.CER C1608 JB 1H 472K-T | B | 77.3/1.8 |
| C958 | 4030006880 | S.CER C1608 JB 1H 472K-T | T | 76.3/1.9 |
| C974 | 4030006880 | S.CER C1608 JB 1H 472K-T | T | 79.8/19.4 |
| C975 | 4030006880 | S.CER C1608 JB 1H 472K-T | B | 78.8/19.3 |
| C976 | 4030006880 | S.CER C1608 JB 1H 472K-T | T | 77.8/19.4 |
| C977 | 4030006880 | S.CER C1608 JB 1H 472K-T | B | 76.8/19.3 |
| C978 | 4030006880 | S.CER C1608 JB 1H 472K-T | T | 75.8/19.4 |
| C979 | 4030006880 | S.CER C1608 JB 1H 472K-T | B | 74.8/19.3 |
| C980 | 4030006880 | S.CER C1608 JB 1H 472K-T | T | 12.8/30 |
| C981 | 4030006880 | S.CER C1608 JB 1H 472K-T | T | 126.2/1.8 |
| | | | | |
| RL50 | 6330000540 | RLY 2-1419131-2 (OMR-109F) | | |
| RL140 | 6330001430 | RLY NA-12W-K | | |
| RL141 | 6330001430 | RLY NA-12W-K | | |
| | | | | |
| CP81 | 6910009670 | S.CHK HK3-S-T | T | 129.3/16.1 |
| CP82 | 6910009670 | S.CHK HK3-S-T | T | 116.4/75.1 |
| CP495 | 6910009670 | S.CHK HK3-S-T | T | 129.1/5.8 |
| CP496 | 6910009670 | S.CHK HK3-S-T | T | 107.1/5.8 |
| | | | | |
| J1 | 6510023671 | CNR TCS4480-0141577 | | |
| J2 | 6510023661 | CNR TCS4470-0141577 | | |
| J3 | 6510023671 | CNR TCS4480-0141577 | | |
| J4 | 6510023661 | CNR TCS4470-0141577 | | |
| J5 | 6450001130 | CNR JPJ2042-01-110 | | |
| J6 | 6510023730 | CNR LGY6502-0600C | | |
| J7 | 6510023730 | CNR LGY6502-0600C | | |
| J8 | 6510023740 | CNR LGR4609-7000 | | |

M.=Mounted side (T: Mounted on the Top side, B: Mounted on the Bottom side)
S.=Surface mount

## [MAIN UNIT]

| REF NO. | PARTS NO. | DESCRIPTION | | M. | H/V LOCATION |
|---|---|---|---|---|---|
| J9 | 6510024940 | CNR | HEC2305-016250 | | |
| J140 | 6510023720 | CNR | LGY6501-0600C | | |
| J141 | 6510023720 | CNR | LGY6501-0600C | | |
| J142 | 6510018961 | S.CNR | B2B-PH-SM4-TB (LF) (SN) | T | 256.2/96.5 |
| J340 | 6510022811 | CNR | IMSA-9180B-22B-PT1 | | |
| J341 | 6510021651 | CNR | IMSA-9180B-30B-PT1 | | |
| J360 | 6510022811 | CNR | IMSA-9180B-22B-PT1 | | |
| J361 | 6510021651 | CNR | IMSA-9180B-30B-PT1 | | |
| J380 | 6510022811 | CNR | IMSA-9180B-22B-PT1 | | |
| J381 | 6510021651 | CNR | IMSA-9180B-30B-PT1 | | |
| J399 | 6510007020 | CNR | TMP-J01X-V6 | | |
| J400 | 6510019981 | S.CNR | 52808-1671 (1690) | T | 232.7/5 |
| J401 | 6510022191 | S.CNR | B3B-PH-SM4-TB (LF) (SN) | T | 232.7/98.9 |
| J403 | 6510019981 | S.CNR | 52808-1671 (1690) | T | 32.5/5 |
| J404 | 6510022191 | S.CNR | B3B-PH-SM4-TB (LF) (SN) | T | 143.8/115.4 |
| J410 | 6510020001 | S.CNR | 52808-3071 (3090) | T | 5.5/42.5 |
| J411 | 6510019971 | S.CNR | 52808-1071 | T | 5.6/98.7 |
| J430 | 6510022311 | S.CNR | B5B-PH-SM4-TB (LF) (SN) | T | 5/72.9 |
| J440 | 6510018921 | S.CNR | B8B-PH-SM4-TB (LF) (SN) | T | 154.5/5 |
| J450 | 6510003471 | CNR | B11B-EH-S (LF) (SN) | | |
| J451 | 6510018941 | S.CNR | B13B-PH-SM4-TB (LF) (SN) | T | 184.2/5 |
| J490 | 6510023750 | CNR | 01K1971-10 | | |
| J491 | 6510007020 | CNR | TMP-J01X-V6 | | |
| J492 | 6510014961 | S.CNR | B2B-ZR-SM4-TF (LF) (SN) | T | 202.6/11.5 |
| J495 | 6510023701 | CNR | TORX178S (F) | | |
| J496 | 6510023711 | CNR | TOTX178S (F) | | |
| J501 | 6510007020 | CNR | TMP-J01X-V6 | | |
| J502 | 6510007020 | CNR | TMP-J01X-V6 | | |
| J503 | 6510007020 | CNR | TMP-J01X-V6 | | |
| J801 | 6510007020 | CNR | TMP-J01X-V6 | | |
| J802 | 6510007020 | CNR | TMP-J01X-V6 | | |
| J808 | 6510007020 | CNR | TMP-J01X-V6 | | |
| J900 | 6510022471 | S.CNR | 40FLT-SM2-TB (LF) (SN) | T | 116.5/10.6 |
| J901 | 6510015541 | S.CNR | B4B-ZR-SM4-TF (LF) (SN) | T | 9.2/113 |
| J940 | 6510022471 | S.CNR | 40FLT-SM2-TB (LF) (SN) | T | 84.6/10.6 |
| F1 | 5220000230 | HOL | S-N5054 #01 | | |
| F2 | 5220000230 | HOL | S-N5054 #01 | | |
| F3 | 5210000041 | FUS | FGB 2A PBF (FGB0 125V) | | |
| W1 | 9024801019 | JMP | 74/98/020/X98/X98 | | |
| EP50 | 6910012350 | S.BEA | MMZ1608Y 102BT | B | 78.1/126.8 |
| EP51 | 6910012350 | S.BEA | MMZ1608Y 102BT | B | 95.6/118.7 |
| EP52 | 6910012350 | S.BEA | MMZ1608Y 102BT | B | 90.1/126.1 |
| EP403 | 6910012350 | S.BEA | MMZ1608Y 102BT | T | 233.2/10.4 |
| EP404 | 6910012350 | S.BEA | MMZ1608Y 102BT | T | 231.9/10.4 |
| EP408 | 6910012350 | S.BEA | MMZ1608Y 102BT | T | 32.1/10 |
| EP409 | 6910012350 | S.BEA | MMZ1608Y 102BT | T | 30.8/10 |
| EP414 | 6910012350 | S.BEA | MMZ1608Y 102BT | T | 9.9/34 |
| EP415 | 6910012350 | S.BEA | MMZ1608Y 102BT | B | 9.9/31 |
| EP416 | 6910012350 | S.BEA | MMZ1608Y 102BT | B | 10.2/95 |
| EP417 | 6910012350 | S.BEA | MMZ1608Y 102BT | T | 10.2/96.2 |
| EP420 | 6910012350 | S.BEA | MMZ1608Y 102BT | B | 10.1/101.2 |
| EP421 | 6910012350 | S.BEA | MMZ1608Y 102BT | T | 10.1/102.2 |
| EP430 | 6910012350 | S.BEA | MMZ1608Y 102BT | B | 5.8/68.9 |
| EP431 | 6910012350 | S.BEA | MMZ1608Y 102BT | B | 5.8/70.9 |
| EP432 | 6910012350 | S.BEA | MMZ1608Y 102BT | B | 5.8/72.9 |
| EP501 | 9088000010 | TUB | IRRAX 1.5 (d) L=12 mm | | |
| EP905 | 6910012350 | S.BEA | MMZ1608Y 102BT | B | 121.2/5.8 |
| EP907 | 6910012350 | S.BEA | MMZ1608Y 102BT | B | 119.2/5.8 |

## [DSP-A UNIT]

| REF NO. | PARTS NO. | DESCRIPTION | | M. | H/V LOCATION |
|---|---|---|---|---|---|
| IC1 | 1140012211 | S.IC | TMS320C6713BZDP225 | T | 28.1/20.4 |
| IC151 | 1130008361 | S.IC | TC7SHU04FU (TE85L,JF) | B | 45.5/8.1 |
| IC171 | 1130008041 | S.IC | TC7SH04FU (TE85L,JF) | T | 41.3/4.6 |
| IC181 | 1130011150 | S.IC | SN74AHC2G08HDCTR | T | 30.2/1.9 |
| IC191 | 1130011150 | S.IC | SN74AHC2G08HDCTR | T | 24/3.5 |
| IC201 | 1130013492 | S.IC | AT29LV040A-15TU | B | 29/42 |
| IC203 | 1110006411 | S.IC | R3111N111A-TR-F | T | 30/36.5 |
| IC301 | 1110006100 | S.IC | NJM5534MD-TE1 | T | 72.3/44.7 |
| IC331 | 1130009981 | S.IC | TC7W53FK (TE85L,F) | T | 76.9/34.1 |
| IC341 | 1110006100 | S.IC | NJM5534MD-TE1 | T | 70.3/35.5 |
| IC371 | 1110006100 | S.IC | NJM5534MD-TE1 | T | 59.4/44.3 |
| IC401 | 1110006111 | S.IC | AK5394AVSP/P | T | 54.2/31 |
| IC451 | 1130006891 | S.IC | TC7S04FU (TE85R,F) | T | 43.5/41 |
| IC452 | 1130012160 | S.IC | SN74LVC1GU04DCKR | T | 42.8/38.5 |
| IC501 | 1110001901 | S.IC | uPC4570G2-E1-A | T | 71.6/27.4 |
| IC551 | 1130013090 | S.IC | AK4396VFP-E2/P | T | 54.6/7.3 |
| IC601 | 1110006100 | S.IC | NJM5534MD-TE1 | T | 63.6/17.3 |
| IC651 | 1110006100 | S.IC | NJM5534MD-TE1 | T | 66.8/7.2 |
| IC701 | 1110006100 | S.IC | NJM5534MD-TE1 | T | 74.1/17.5 |
| IC771 | 1110004770 | S.IC | BU9480F-E2 | T | 51.7/18.4 |
| Q1 | 1590000680 | S.TR | DTC114EUA T106 | T | 45.7/16.5 |
| D501 | 1730002320 | S.ZEN | MA8051-M (TX) | B | 76.5/29.5 |
| FI101 | 2040000790 | S.LC | EXCCET103U | T | 36.5/2.8 |
| X151 | 6050011660 | S.XTL | CR-754 (30.000 MHz) | B | 40.5/2.9 |
| L1 | 6200003950 | S.COL | HF50ACC 322513-T | B | 43.2/34.8 |
| L2 | 6180003501 | S.COL | SLF6028T-100M1R3-PF | B | 13.6/35.7 |
| L3 | 6200003640 | S.COL | MLF1608E 100K-T | B | 12.2/8.2 |
| L401 | 6200003950 | S.COL | HF50ACC 322513-T | T | 49.3/42.9 |
| L921 | 6200003950 | S.COL | HF50ACC 322513-T | T | 73.7/4.4 |
| L922 | 6200003950 | S.COL | HF50ACC 322513-T | T | 77.9/9.5 |
| L924 | 6200003950 | S.COL | HF50ACC 322513-T | T | 74.1/9.5 |
| L925 | 6200003950 | S.COL | HF50ACC 322513-T | T | 77.5/4.4 |
| L961 | 6200003950 | S.COL | HF50ACC 322513-T | B | 11.3/12.2 |
| L962 | 6200003950 | S.COL | HF50ACC 322513-T | B | 12.8/24.6 |
| R1 | 7030003560 | S.RES | ERJ3GEYJ 103 V (10 K) | B | 42.5/22.3 |
| R2 | 7030003560 | S.RES | ERJ3GEYJ 103 V (10 K) | B | 41.8/24.2 |
| R3 | 7030003560 | S.RES | ERJ3GEYJ 103 V (10 K) | B | 42.5/21 |
| R4 | 7030003560 | S.RES | ERJ3GEYJ 103 V (10 K) | B | 41.8/13.7 |
| R5 | 7030003440 | S.RES | ERJ3GEYJ 102 V (1 K) | B | 23.2/6 |
| R6 | 7030003440 | S.RES | ERJ3GEYJ 102 V (1 K) | B | 21.9/6 |
| R7 | 7030003640 | S.RES | ERJ3GEYJ 473 V (47 K) | B | 20/6.7 |
| R8 | 7030003440 | S.RES | ERJ3GEYJ 102 V (1 K) | B | 14.1/8.2 |
| R9 | 7030003640 | S.RES | ERJ3GEYJ 473 V (47 K) | B | 14.5/11.6 |
| R10 | 7030003640 | S.RES | ERJ3GEYJ 473 V (47 K) | T | 43.8/13.1 |
| R11 | 7030003460 | S.RES | ERJ3GEYJ 152 V (1.5 K) | B | 48.2/9.7 |
| R12 | 7030003560 | S.RES | ERJ3GEYJ 103 V (10 K) | B | 26.8/13.3 |
| R151 | 7030003320 | S.RES | ERJ3GEYJ 101 V (100) | T | 44.3/5.3 |
| R152 | 7030003800 | S.RES | ERJ3GEYJ 105 V (1 M) | B | 43.5/6.2 |
| R171 | 7030003320 | S.RES | ERJ3GEYJ 101 V (100) | T | 41.3/1.4 |
| R181 | 7030003560 | S.RES | ERJ3GEYJ 103 V (10 K) | T | 9.1/7 |
| R182 | 7030003560 | S.RES | ERJ3GEYJ 103 V (10 K) | T | 6.3/7 |
| R183 | 7030003560 | S.RES | ERJ3GEYJ 103 V (10 K) | T | 11.9/8.3 |
| R184 | 7030003560 | S.RES | ERJ3GEYJ 103 V (10 K) | T | 11.9/7 |
| R201 | 7030003860 | S.RES | ERJ3GE JPW V | T | 30.8/39.2 |
| R301 | 7030003860 | S.RES | ERJ3GE JPW V | T | 79.5/38.4 |
| R302 | 7030009591 | S.RES | ERA3YED 472V (4.7 K) | T | 77.6/46.9 |
| R303 | 7030009591 | S.RES | ERA3YED 472V (4.7 K) | T | 75.7/46.1 |
| R304 | 7030003320 | S.RES | ERJ3GEYJ 101 V (100) | T | 78.1/40.7 |
| R305 | 7030003860 | S.RES | ERJ3GE JPW V | T | 75.7/43.5 |
| R306 | 7030003320 | S.RES | ERJ3GEYJ 101 V (100) | T | 68.9/46.1 |
| R331 | 7030003500 | S.RES | ERJ3GEYJ 332 V (3.3 K) | T | 64.4/39.9 |
| R332 | 7030003480 | S.RES | ERJ3GEYJ 222 V (2.2 K) | T | 65.7/39.9 |
| R333 | 7030003640 | S.RES | ERJ3GEYJ 473 V (47 K) | T | 75/33.2 |
| R341 | 7030003320 | S.RES | ERJ3GEYJ 101 V (100) | T | 73.7/34.8 |
| R342 | 7030003320 | S.RES | ERJ3GEYJ 101 V (100) | T | 66.9/37.3 |
| R343 | 7030006601 | S.RES | ERA3YED 272V (2.7 K) | T | 73.7/37.4 |
| R344 | 7030010390 | S.RES | ERA3YED 821V (820) | T | 65.6/33.6 |
| R345 | 7030009691 | S.RES | ERA3YED 101V (100) | T | 66.2/31.7 |
| R371 | 7030003320 | S.RES | ERJ3GEYJ 101 V (100) | T | 63.4/43.8 |
| R372 | 7030003320 | S.RES | ERJ3GEYJ 101 V (100) | T | 55.3/46.3 |
| R373 | 7030006601 | S.RES | ERA3YED 272V (2.7 K) | T | 63.4/45.6 |
| R374 | 7030010390 | S.RES | ERA3YED 821V (820) | T | 54.7/41.8 |
| R375 | 7030009691 | S.RES | ERA3YED 101V (100) | T | 56/40.5 |
| R401 | 7030009591 | S.RES | ERA3YED 472V (4.7 K) | T | 53.1/42.5 |
| R402 | 7030009591 | S.RES | ERA3YED 472V (4.7 K) | T | 51.8/44 |
| R403 | 7030003640 | S.RES | ERJ3GEYJ 473 V (47 K) | T | 54.1/38.7 |
| R404 | 7030003200 | S.RES | ERJ3GEYJ 100 V (10) | T | 50/40 |
| R405 | 7030003320 | S.RES | ERJ3GEYJ 101 V (100) | T | 51.1/38.1 |
| R406 | 7030003640 | S.RES | ERJ3GEYJ 473 V (47 K) | T | 49.8/38.1 |
| R407 | 7030003460 | S.RES | ERJ3GEYJ 152 V (1.5 K) | B | 46.8/36 |
| R409 | 7030003640 | S.RES | ERJ3GEYJ 473 V (47 K) | T | 52.3/23.8 |
| R410 | 7030003640 | S.RES | ERJ3GEYJ 473 V (47 K) | T | 47.2/23.8 |
| R411 | 7030003640 | S.RES | ERJ3GEYJ 473 V (47 K) | T | 49.8/23.8 |
| R412 | 7030003520 | S.RES | ERJ3GEYJ 472 V (4.7 K) | T | 56/22.3 |
| R413 | 7030003520 | S.RES | ERJ3GEYJ 472 V (4.7 K) | T | 54.1/21.9 |
| R451 | 7030003800 | S.RES | ERJ3GEYJ 105 V (1 M) | T | 42.6/36.6 |
| R501 | 7030006521 | S.RES | ERA3YED 561V (560) | T | 76.1/29.9 |
| R502 | 7030003360 | S.RES | ERJ3GEYJ 221 V (220) | T | 70.3/23.4 |
| R503 | 7030003380 | S.RES | ERJ3GEYJ 331 V (330) | T | 65.3/28.9 |
| R504 | 7030003680 | S.RES | ERJ3GEYJ 104 V (100 K) | T | 65.3/27.6 |
| R551 | 7030003320 | S.RES | ERJ3GEYJ 101 V (100) | T | 49.5/8.6 |
| R559 | 7030003640 | S.RES | ERJ3GEYJ 473 V (47 K) | T | 59.8/10.5 |
| R601 | 7030006521 | S.RES | ERA3YED 561V (560) | T | 63.1/20.7 |

M.=Mounted side (T: Mounted on the Top side, B: Mounted on the Bottom side)
S.=Surface mount

## [DSP-A UNIT]

| REF NO. | PARTS NO. | DESCRIPTION | M. | H/V LOCATION |
|---|---|---|---|---|
| R602 | 7030007661 | S.RES ERA3YED 331V (330) | T | 64/22 |
| R603 | 7030007661 | S.RES ERA3YED 331V (330) | T | 59/19.8 |
| R604 | 7030009961 | S.RES ERA3YED 221V (220) | T | 68.7/21 |
| R605 | 7030007661 | S.RES ERA3YED 331V (330) | T | 65.7/20.7 |
| R606 | 7030003320 | S.RES ERJ3GEYJ 101 V (100) | T | 67.1/13.9 |
| R607 | 7030003320 | S.RES ERJ3GEYJ 101 V (100) | T | 61.9/13.9 |
| R651 | 7030006521 | S.RES ERA3YED 561V (560) | T | 64.3/10.6 |
| R652 | 7030007661 | S.RES ERA3YED 331V (330) | T | 65.3/11.9 |
| R653 | 7030007661 | S.RES ERA3YED 331V (330) | T | 62.1/10.1 |
| R654 | 7030009961 | S.RES ERA3YED 221V (220) | T | 69.5/10.6 |
| R655 | 7030007661 | S.RES ERA3YED 331V (330) | T | 66.9/10.6 |
| R658 | 7030003320 | S.RES ERJ3GEYJ 101 V (100) | T | 67.7/3.8 |
| R659 | 7030003320 | S.RES ERJ3GEYJ 101 V (100) | T | 64/3.8 |
| R701 | 7030010770 | S.RES ERA3YED 681V (680) | T | 71.3/21 |
| R702 | 7030009861 | S.RES ERA3YED 471V (470) | T | 74.8/22.7 |
| R703 | 7030010770 | S.RES ERA3YED 681V (680) | T | 70.5/13.5 |
| R704 | 7030009861 | S.RES ERA3YED 471V (470) | T | 77.2/13.3 |
| R705 | 7030009691 | S.RES ERA3YED 101V (100) | T | 77.4/22.2 |
| R706 | 7030003320 | S.RES ERJ3GEYJ 101 V (100) | T | 77.3/20.9 |
| R707 | 7030003320 | S.RES ERJ3GEYJ 101 V (100) | T | 74.1/14.1 |
| R801 | 7030003650 | S.RES ERJ3GEYJ 563 V (56 K) | T | 78/27.2 |
| R802 | 7030003680 | S.RES ERJ3GEYJ 104 V (100 K) | T | 78/25.9 |
| R803 | 7030003480 | S.RES ERJ3GEYJ 222 V (2.2 K) | T | 78.7/24 |
| R804 | 7030003490 | S.RES ERJ3GEYJ 272 V (2.7 K) | T | 78/29.8 |
| R805 | 7030003340 | S.RES ERJ3GEYJ 151 V (150) | T | 78/28.5 |
| R901 | 7030003860 | S.RES ERJ3GE JPW V | T | 46.6/21 |
| R962 | 7030003320 | S.RES ERJ3GEYJ 101 V (100) | T | 12.1/16.8 |
| R963 | 7030003320 | S.RES ERJ3GEYJ 101 V (100) | T | 11.9/15.5 |
| R964 | 7030003320 | S.RES ERJ3GEYJ 101 V (100) | T | 11.9/14.2 |
| R965 | 7030003320 | S.RES ERJ3GEYJ 101 V (100) | T | 11.9/12.9 |
| R967 | 7030003320 | S.RES ERJ3GEYJ 101 V (100) | T | 13.6/37.8 |
| R968 | 7030003320 | S.RES ERJ3GEYJ 101 V (100) | T | 11.9/11.6 |
| R969 | 7030003320 | S.RES ERJ3GEYJ 101 V (100) | T | 13.6/48.2 |
| R970 | 7030003320 | S.RES ERJ3GEYJ 101 V (100) | T | 13.6/46.9 |
| R971 | 7030003320 | S.RES ERJ3GEYJ 101 V (100) | T | 13.6/45.6 |
| R972 | 7030003320 | S.RES ERJ3GEYJ 101 V (100) | T | 13.6/44.3 |
| R973 | 7030003320 | S.RES ERJ3GEYJ 101 V (100) | T | 13.6/43 |
| R974 | 7030003320 | S.RES ERJ3GEYJ 101 V (100) | T | 13.6/41.7 |
| R975 | 7030003320 | S.RES ERJ3GEYJ 101 V (100) | T | 13.6/40.4 |
| R976 | 7030003320 | S.RES ERJ3GEYJ 101 V (100) | T | 13.6/39.1 |
| | | | | |
| C1 | 4030011600 | S.CER C1608 JB 1E 104K-T | B | 15.2/30.5 |
| C2 | 4030011600 | S.CER C1608 JB 1E 104K-T | B | 41.8/30.7 |
| C3 | 4030011600 | S.CER C1608 JB 1E 104K-T | B | 18/32.9 |
| C4 | 4030011600 | S.CER C1608 JB 1E 104K-T | B | 39.4/32.9 |
| C5 | 4030011600 | S.CER C1608 JB 1E 104K-T | B | 23/26.3 |
| C6 | 4030011600 | S.CER C1608 JB 1E 104K-T | B | 24.3/26.3 |
| C7 | 4030011600 | S.CER C1608 JB 1E 104K-T | B | 28.6/26.3 |
| C8 | 4030011600 | S.CER C1608 JB 1E 104K-T | B | 29.9/26.3 |
| C9 | 4030011600 | S.CER C1608 JB 1E 104K-T | B | 33.8/26.3 |
| C10 | 4030011600 | S.CER C1608 JB 1E 104K-T | B | 21.5/23.3 |
| C11 | 4030011600 | S.CER C1608 JB 1E 104K-T | B | 36/23.7 |
| C12 | 4030011600 | S.CER C1608 JB 1E 104K-T | T | 13.7/21 |
| C13 | 4030011600 | S.CER C1608 JB 1E 104K-T | B | 22.2/20.2 |
| C14 | 4030011600 | S.CER C1608 JB 1E 104K-T | B | 36/21.1 |
| C15 | 4030011600 | S.CER C1608 JB 1E 104K-T | B | 22.2/18.9 |
| C16 | 4030011600 | S.CER C1608 JB 1E 104K-T | B | 36/18.5 |
| C17 | 4030011600 | S.CER C1608 JB 1E 104K-T | T | 43.5/20 |
| C18 | 4030011600 | S.CER C1608 JB 1E 104K-T | B | 22.2/15.2 |
| C19 | 4030011600 | S.CER C1608 JB 1E 104K-T | B | 34.7/14.4 |
| C20 | 4030011600 | S.CER C1608 JB 1E 104K-T | B | 23.1/13.3 |
| C21 | 4030011600 | S.CER C1608 JB 1E 104K-T | B | 24.4/13.3 |
| C22 | 4030011600 | S.CER C1608 JB 1E 104K-T | B | 28.1/13.3 |
| C23 | 4030011600 | S.CER C1608 JB 1E 104K-T | B | 32.6/12.6 |
| C24 | 4030011600 | S.CER C1608 JB 1E 104K-T | B | 35.2/12.6 |
| C25 | 4030011600 | S.CER C1608 JB 1E 104K-T | B | 17.3/6.7 |
| C26 | 4030011600 | S.CER C1608 JB 1E 104K-T | B | 33.1/6.8 |
| C27 | 4030011600 | S.CER C1608 JB 1E 104K-T | B | 41.8/11.1 |
| C28 | 4030011600 | S.CER C1608 JB 1E 104K-T | B | 15.4/8.2 |
| C29 | 4030011600 | S.CER C1608 JB 1E 104K-T | B | 40.9/6.8 |
| C30 | 4030011600 | S.CER C1608 JB 1E 104K-T | T | 35.2/5 |
| C31 | 4030011600 | S.CER C1608 JB 1E 104K-T | T | 28.5/5.2 |
| C32 | 4030011600 | S.CER C1608 JB 1E 104K-T | T | 37.8/5 |
| C33 | 4030011600 | S.CER C1608 JB 1E 104K-T | T | 18.5/35.2 |
| C34 | 4030011600 | S.CER C1608 JB 1E 104K-T | T | 36.4/35 |
| C35 | 4030011600 | S.CER C1608 JB 1E 104K-T | B | 26/32.9 |
| C36 | 4030011600 | S.CER C1608 JB 1E 104K-T | B | 29.3/32.9 |
| C37 | 4030011600 | S.CER C1608 JB 1E 104K-T | B | 36.8/32.9 |
| C38 | 4030011600 | S.CER C1608 JB 1E 104K-T | B | 15.2/27.9 |
| C39 | 4030011600 | S.CER C1608 JB 1E 104K-T | B | 22.4/32.9 |
| C40 | 4030011600 | S.CER C1608 JB 1E 104K-T | B | 26/26.3 |
| C41 | 4030011600 | S.CER C1608 JB 1E 104K-T | B | 21.7/26.3 |
| C42 | 4030011600 | S.CER C1608 JB 1E 104K-T | B | 27.3/26.3 |
| C43 | 4030011600 | S.CER C1608 JB 1E 104K-T | B | 32.5/26.3 |
| C44 | 4030011600 | S.CER C1608 JB 1E 104K-T | B | 35.1/26.3 |
| C45 | 4030011600 | S.CER C1608 JB 1E 104K-T | B | 41.8/26.8 |
| C46 | 4030011600 | S.CER C1608 JB 1E 104K-T | B | 15.3/24.9 |
| C47 | 4030011600 | S.CER C1608 JB 1E 104K-T | T | 43.5/29 |
| C48 | 4030011600 | S.CER C1608 JB 1E 104K-T | B | 22.2/21.5 |
| C49 | 4030011600 | S.CER C1608 JB 1E 104K-T | B | 41.8/17.9 |
| C50 | 4030011600 | S.CER C1608 JB 1E 104K-T | B | 22.2/17.6 |
| C51 | 4030011600 | S.CER C1608 JB 1E 104K-T | B | 36/15.9 |
| C52 | 4030011600 | S.CER C1608 JB 1E 104K-T | B | 15.8/11.6 |
| C53 | 4030011600 | S.CER C1608 JB 1E 104K-T | B | 21.8/13.3 |
| C54 | 4030011600 | S.CER C1608 JB 1E 104K-T | T | 42.9/9.9 |
| C55 | 4030011600 | S.CER C1608 JB 1E 104K-T | B | 29.4/13.3 |
| C56 | 4030011600 | S.CER C1608 JB 1E 104K-T | B | 25/6.7 |
| C57 | 4030011600 | S.CER C1608 JB 1E 104K-T | B | 29.8/6.8 |
| C58 | 4030011600 | S.CER C1608 JB 1E 104K-T | B | 38.3/6.8 |
| C59 | 4030011600 | S.CER C1608 JB 1E 104K-T | T | 20.3/5.3 |
| C60 | 4510007130 | S.ELE EEFCD 0J 470R | T | 19.6/44 |
| C61 | 4550007480 | S.TAN F930J106MAABMA | B | 44.8/29.7 |
| C62 | 4510007130 | S.ELE EEFCD 0J 470R | T | 25.7/43.9 |
| C101 | 4030011600 | S.CER C1608 JB 1E 104K-T | B | 35.7/6.8 |

## [DSP-A UNIT]

| REF NO. | PARTS NO. | DESCRIPTION | M. | H/V LOCATION |
|---|---|---|---|---|
| C151 | 4030011600 | S.CER C1608 JB 1E 104K-T | B | 45.6/10 |
| C152 | 4030007030 | S.CER C1608 CH 1H 150J-T | B | 46.1/6.2 |
| C153 | 4030007030 | S.CER C1608 CH 1H 150J-T | B | 43.1/8 |
| C171 | 4030011600 | S.CER C1608 JB 1E 104K-T | T | 41.3/2.7 |
| C181 | 4030011600 | S.CER C1608 JB 1E 104K-T | T | 31/4.3 |
| C191 | 4030011600 | S.CER C1608 JB 1E 104K-T | T | 22.6/1.2 |
| C201 | 4030011600 | S.CER C1608 JB 1E 104K-T | B | 41.4/43.3 |
| C301 | 4340000250 | S.MLR ECHU 1C 104JX5 | T | 77.9/44 |
| C302 | 4550007500 | S.TAN F931D106MBABMA | B | 76.5/43.7 |
| C303 | 4030011600 | S.CER C1608 JB 1E 104K-T | T | 75.6/40.9 |
| C304 | 4550007500 | S.TAN F931D106MBABMA | B | 71.7/43.7 |
| C305 | 4030011600 | S.CER C1608 JB 1E 104K-T | T | 67.6/46.1 |
| C306 | 4030007050 | S.CER C1608 CH 1H 220J-T | T | 72.4/40.1 |
| C331 | 4030011600 | S.CER C1608 JB 1E 104K-T | T | 78.8/32.8 |
| C332 | 4550007520 | S.TAN F931A106MAABMA | B | 67.9/35.2 |
| C333 | 4030011600 | S.CER C1608 JB 1E 104K-T | T | 79.5/35.8 |
| C341 | 4550007500 | S.TAN F931D106MBABMA | B | 73.1/32.4 |
| C342 | 4030011600 | S.CER C1608 JB 1E 104K-T | T | 73.7/31.6 |
| C343 | 4550007500 | S.TAN F931D106MBABMA | B | 73.2/38.1 |
| C344 | 4030011600 | S.CER C1608 JB 1E 104K-T | T | 65.6/37.3 |
| C345 | 4340000250 | S.MLR ECHU 1C 104JX5 | T | 76.7/38.1 |
| C346 | 4030018580 | S.CER C1608 CH 1H 821J-T | T | 66.9/33.6 |
| C347 | 4030011600 | S.CER C1608 JB 1E 104K-T | T | 66.1/35.5 |
| C348 | 4030007050 | S.CER C1608 CH 1H 220J-T | T | 70.9/30.9 |
| C371 | 4550007500 | S.TAN F931D106MBABMA | B | 59.8/43.8 |
| C372 | 4030011600 | S.CER C1608 JB 1E 104K-T | T | 63.4/42.5 |
| C373 | 4550007500 | S.TAN F931D106MBABMA | B | 50.1/43.9 |
| C374 | 4030011600 | S.CER C1608 JB 1E 104K-T | T | 53.4/45.5 |
| C375 | 4340000250 | S.MLR ECHU 1C 104JX5 | T | 68.1/42.6 |
| C376 | 4030018580 | S.CER C1608 CH 1H 821J-T | T | 56/43.1 |
| C377 | 4030011600 | S.CER C1608 JB 1E 104K-T | T | 55.3/45 |
| C378 | 4030007050 | S.CER C1608 CH 1H 220J-T | T | 59.4/39.5 |
| C401 | 4550007520 | S.TAN F931A106MAABMA | B | 54.9/43.8 |
| C402 | 4030017840 | S.CER C2012 CH 1H 222J-T | T | 58.1/37.6 |
| C403 | 4550007480 | S.TAN F930J106MAABMA | B | 63.1/35.2 |
| C404 | 4030011810 | S.CER C1608 JB 1A 224K-T | T | 61.5/37.4 |
| C405 | 4550007480 | S.TAN F930J106MAABMA | B | 58.3/35.2 |
| C406 | 4030011810 | S.CER C1608 JB 1A 224K-T | T | 63.5/36.7 |
| C407 | 4550007480 | S.TAN F930J106MAABMA | B | 50.4/36.1 |
| C408 | 4030011600 | S.CER C1608 JB 1E 104K-T | T | 54.1/37.4 |
| C409 | 4030011600 | S.CER C1608 JB 1E 104K-T | T | 54.1/23.2 |
| C410 | 4030009000 | S.CER C2012 JB 1C 224K-T | T | 62.1/24.2 |
| C411 | 4550007480 | S.TAN F930J106MAABMA | B | 63.1/28.4 |
| C412 | 4550007480 | S.TAN F930J106MAABMA | B | 58.3/29.1 |
| C413 | 4030009000 | S.CER C2012 JB 1C 224K-T | T | 59/22.5 |
| C414 | 4030011600 | S.CER C1608 JB 1E 104K-T | T | 54.1/24.5 |
| C415 | 4550007520 | S.TAN F931A106MAABMA | B | 53/26.5 |
| C416 | 4550007520 | S.TAN F931A106MAABMA | B | 53/31.3 |
| C417 | 4030017840 | S.CER C2012 CH 1H 222J-T | T | 58/24.2 |
| C450 | 4030011600 | S.CER C1608 JB 1E 104K-T | T | 43.1/35.3 |
| C451 | 4030011600 | S.CER C1608 JB 1E 104K-T | T | 43.6/42.9 |
| C452 | 4030006860 | S.CER C1608 JB 1H 102K-T | T | 40.8/39.6 |
| C501 | 4030011600 | S.CER C1608 JB 1E 104K-T | T | 74.8/24 |
| C502 | 4550007500 | S.TAN F931D106MBABMA | B | 77.5/33.1 |
| C503 | 4030011600 | S.CER C1608 JB 1E 104K-T | T | 71.6/23.4 |
| C504 | 4550007500 | S.TAN F931D106MBABMA | B | 67.9/29.1 |
| C506 | 4030007090 | S.CER C1608 CH 1H 470J-T | T | 67.1/28.4 |
| C507 | 4030007090 | S.CER C1608 CH 1H 470J-T | T | 76.1/27.3 |
| C551 | 4550007520 | S.TAN F931A106MAABMA | B | 50.3/8.7 |
| C552 | 4030011600 | S.CER C1608 JB 1E 104K-T | T | 49.5/5.5 |
| C553 | 4550007520 | S.TAN F931A106MAABMA | B | 55/13.3 |
| C554 | 4030011600 | S.CER C1608 JB 1E 104K-T | T | 60/7.6 |
| C555 | 4030011600 | S.CER C1608 JB 1E 104K-T | T | 59.8/4.6 |
| C556 | 4550007480 | S.TAN F930J106MAABMA | B | 53.6/7.1 |
| C557 | 4030011600 | S.CER C1608 JB 1E 104K-T | T | 60.7/2.8 |
| C558 | 4550007520 | S.TAN F931A106MAABMA | B | 53.6/4.3 |
| C601 | 4550007480 | S.TAN F930J106MAABMA | B | 61.3/17.2 |
| C602 | 4030018510 | S.CER C2012 CH 1H 682J-T | T | 58.8/16.5 |
| C603 | 4550007500 | S.TAN F931D106MBABMA | B | 68.2/15 |
| C604 | 4030011600 | S.CER C1608 JB 1E 104K-T | T | 58.2/14.2 |
| C605 | 4030011600 | S.CER C1608 JB 1E 104K-T | T | 64.5/13.9 |
| C606 | 4550007500 | S.TAN F931D106MBABMA | B | 69.2/19.2 |
| C607 | 4030018510 | S.CER C2012 CH 1H 682J-T | T | 67/22.5 |
| C608 | 4030007050 | S.CER C1608 CH 1H 220J-T | T | 68.3/16.7 |
| C651 | 4550007480 | S.TAN F930J106MAABMA | B | 60.1/9.2 |
| C652 | 4030018510 | S.CER C2012 CH 1H 682J-T | T | 61.9/6.6 |
| C653 | 4550007500 | S.TAN F931D106MBABMA | B | 59.9/2.6 |
| C654 | 4030011600 | S.CER C1608 JB 1E 104K-T | T | 64/2.5 |
| C655 | 4030011600 | S.CER C1608 JB 1E 104K-T | T | 67.7/2.5 |
| C656 | 4550007500 | S.TAN F931D106MBABMA | B | 59.9/6 |
| C657 | 4030018510 | S.CER C2012 CH 1H 682J-T | T | 68.3/12.2 |
| C658 | 4030007050 | S.CER C1608 CH 1H 220J-T | T | 71.4/6.9 |
| C701 | 4030017840 | S.CER C2012 CH 1H 222J-T | T | 74.3/21.1 |
| C702 | 4030017840 | S.CER C2012 CH 1H 222J-T | T | 78.9/13.4 |
| C703 | 4550007500 | S.TAN F931D106MBABMA | B | 75.3/15.7 |
| C704 | 4030011600 | S.CER C1608 JB 1E 104K-T | T | 75.9/12.8 |
| C705 | 4030011600 | S.CER C1608 JB 1E 104K-T | T | 79.4/20.6 |
| C706 | 4550007500 | S.TAN F931D106MBABMA | B | 75.6/21.1 |
| C707 | 4030007050 | S.CER C1608 CH 1H 220J-T | T | 78.7/18 |
| C771 | 4550007480 | S.TAN F930J106MAABMA | B | 49.8/14.1 |
| C772 | 4030011600 | S.CER C1608 JB 1E 104K-T | T | 49.5/15 |
| C773 | 4550007480 | S.TAN F930J106MAABMA | B | 55/18.1 |
| C801 | 4030011600 | S.CER C1608 JB 1E 104K-T | T | 77.4/24 |
| C921 | 4550007510 | S.TAN F931C106MBABMA | B | 66.5/2.6 |
| C922 | 4030011600 | S.CER C1608 JB 1E 104K-T | T | 71/3.6 |
| C923 | 4550002830 | S.TAN TEESVD2 1V 685M12R | B | 78.3/6.5 |
| C924 | 4030011600 | S.CER C1608 JB 1E 104K-T | T | 80.1/8.6 |
| C925 | 4550007510 | S.TAN F931C106MBABMA | B | 67.1/10.5 |
| C926 | 4030011600 | S.CER C1608 JB 1E 104K-T | T | 71.8/12.7 |
| C927 | 4550002830 | S.TAN TEESVD2 1V 685M12R | B | 72.6/6.5 |
| C928 | 4030011600 | S.CER C1608 JB 1E 104K-T | T | 79.6/5.2 |
| C961 | 4030011600 | S.CER C1608 JB 1E 104K-T | B | 11.2/15.7 |
| C962 | 4550007520 | S.TAN F931A106MAABMA | B | 12/18.8 |
| C963 | 4030011600 | S.CER C1608 JB 1E 104K-T | B | 10.7/25.4 |
| C964 | 4550007520 | S.TAN F931A106MAABMA | B | 11.4/29.4 |

M.=Mounted side (T: Mounted on the Top side, B: Mounted on the Bottom side)
S.=Surface mount

## [DSP-A UNIT]

| REF NO. | PARTS NO. | DESCRIPTION | M. | H/V LOCATION |
|---|---|---|---|---|
| J921 | 6910013900 | CNR IMSA-9180S-22A | | |
| J961 | 6910012460 | CNR IMSA-9180S-30A | | |

## [DSP-B UNIT]

| REF NO. | PARTS NO. | DESCRIPTION | M. | H/V LOCATION |
|---|---|---|---|---|
| IC1 | 1140012211 | S.IC TMS320C6713BZDP225 | T | 28.1/20.4 |
| IC151 | 1130008361 | S.IC TC7SHU04FU (TE85L,JF) | B | 45.5/8.1 |
| IC171 | 1130008041 | S.IC TC7SH04FU (TE85L,JF) | T | 41.3/4.6 |
| IC181 | 1130011150 | S.IC SN74AHC2G08HDCTR | T | 30.2/1.9 |
| IC191 | 1130011150 | S.IC SN74AHC2G08HDCTR | T | 24/3.5 |
| IC201 | 1130013492 | S.IC AT29LV040A-15TU | B | 29/42 |
| IC203 | 1110006411 | S.IC R3111N111A-TR-F | T | 30/36.5 |
| IC301 | 1110006100 | S.IC NJM5534MD-TE1 | T | 72.3/44.7 |
| IC331 | 1130009981 | S.IC TC7W53FK (TE85L,F) | T | 76.9/34.1 |
| IC341 | 1110006100 | S.IC NJM5534MD-TE1 | T | 70.3/35.5 |
| IC371 | 1110006100 | S.IC NJM5534MD-TE1 | T | 59.4/44.3 |
| IC401 | 1110006111 | S.IC AK5394AVSP/P | T | 54.2/31 |
| IC451 | 1130006891 | S.IC TC7S04FU (TE85R,F) | T | 43.5/41 |
| IC452 | 1130012160 | S.IC SN74LVC1GU04DCKR | T | 42.8/38.5 |
| IC501 | 1110001901 | S.IC uPC4570G2-E1-A | T | 71.6/27.4 |
| IC551 | 1130013090 | S.IC AK4396VFP-E2/P | T | 54.6/7.3 |
| IC601 | 1110006100 | S.IC NJM5534MD-TE1 | T | 63.6/17.3 |
| IC651 | 1110006100 | S.IC NJM5534MD-TE1 | T | 66.8/7.2 |
| IC701 | 1110006100 | S.IC NJM5534MD-TE1 | T | 74.1/17.5 |
| IC771 | 1110004770 | S.IC BU9480F-E2 | T | 51.7/18.4 |
| Q1 | 1590000680 | S.TR DTC114EUA T106 | T | 45.7/16.5 |
| D501 | 1730002320 | S.ZEN MA8051-M (TX) | B | 76.5/29.5 |
| FI101 | 2040000790 | S.LC EXCCET103U | T | 36.5/2.8 |
| X151 | 6050011660 | S.XTL CR-754 (30.000 MHz) | B | 40.5/2.9 |
| L1 | 6200003950 | S.COL HF50ACC 322513-T | B | 43.2/34.8 |
| L2 | 6180003501 | S.COL SLF6028T-100M1R3-PF | B | 13.6/35.7 |
| L3 | 6200003640 | S.COL MLF1608E 100K-T | B | 12.2/8.2 |
| L401 | 6200003950 | S.COL HF50ACC 322513-T | T | 49.3/42.9 |
| L921 | 6200003950 | S.COL HF50ACC 322513-T | T | 73.7/4.4 |
| L922 | 6200003950 | S.COL HF50ACC 322513-T | T | 77.9/9.5 |
| L924 | 6200003950 | S.COL HF50ACC 322513-T | T | 74.1/9.5 |
| L925 | 6200003950 | S.COL HF50ACC 322513-T | T | 77.5/4.4 |
| L961 | 6200003950 | S.COL HF50ACC 322513-T | B | 11.3/12.2 |
| L962 | 6200003950 | S.COL HF50ACC 322513-T | B | 12.8/24.6 |
| R1 | 7030003560 | S.RES ERJ3GEYJ 103 V (10 K) | B | 42.5/22.3 |
| R2 | 7030003560 | S.RES ERJ3GEYJ 103 V (10 K) | B | 41.8/24.2 |
| R3 | 7030003560 | S.RES ERJ3GEYJ 103 V (10 K) | B | 42.5/21 |
| R4 | 7030003560 | S.RES ERJ3GEYJ 103 V (10 K) | B | 41.8/13.7 |
| R5 | 7030003440 | S.RES ERJ3GEYJ 102 V (1 K) | B | 23.2/6 |
| R6 | 7030003440 | S.RES ERJ3GEYJ 102 V (1 K) | B | 21.9/6 |
| R7 | 7030003640 | S.RES ERJ3GEYJ 473 V (47 K) | B | 20/6.7 |
| R8 | 7030003440 | S.RES ERJ3GEYJ 102 V (1 K) | B | 14.1/8.2 |
| R9 | 7030003640 | S.RES ERJ3GEYJ 473 V (47 K) | B | 14.5/11.6 |
| R10 | 7030003640 | S.RES ERJ3GEYJ 473 V (47 K) | T | 43.8/13.1 |
| R11 | 7030003460 | S.RES ERJ3GEYJ 152 V (1.5 K) | B | 48.2/9.7 |
| R12 | 7030003560 | S.RES ERJ3GEYJ 103 V (10 K) | B | 26.8/13.3 |
| R151 | 7030003320 | S.RES ERJ3GEYJ 101 V (100) | T | 44.3/5.3 |
| R152 | 7030003800 | S.RES ERJ3GEYJ 105 V (1 M) | B | 43.5/6.2 |
| R171 | 7030003320 | S.RES ERJ3GEYJ 101 V (100) | T | 41.3/1.4 |
| R181 | 7030003560 | S.RES ERJ3GEYJ 103 V (10 K) | T | 9.1/7 |
| R182 | 7030003560 | S.RES ERJ3GEYJ 103 V (10 K) | T | 6.3/7 |
| R183 | 7030003560 | S.RES ERJ3GEYJ 103 V (10 K) | T | 11.9/8.3 |
| R184 | 7030003560 | S.RES ERJ3GEYJ 103 V (10 K) | T | 11.9/7 |
| R201 | 7030003860 | S.RES ERJ3GE JPW V | T | 30.8/39.2 |
| R301 | 7030003860 | S.RES ERJ3GE JPW V | T | 79.5/38.4 |
| R302 | 7030009591 | S.RES ERA3YED 472V (4.7 K) | T | 77.6/46.9 |
| R303 | 7030009591 | S.RES ERA3YED 472V (4.7 K) | T | 75.7/46.1 |
| R304 | 7030003320 | S.RES ERJ3GEYJ 101 V (100) | T | 78.1/40.7 |
| R305 | 7030003860 | S.RES ERJ3GE JPW V | T | 75.7/43.5 |
| R306 | 7030003320 | S.RES ERJ3GEYJ 101 V (100) | T | 68.9/46.1 |
| R331 | 7030003500 | S.RES ERJ3GEYJ 332 V (3.3 K) | T | 64.4/39.9 |
| R332 | 7030003480 | S.RES ERJ3GEYJ 222 V (2.2 K) | T | 65.7/39.9 |
| R333 | 7030003640 | S.RES ERJ3GEYJ 473 V (47 K) | T | 75/33.2 |
| R341 | 7030003320 | S.RES ERJ3GEYJ 101 V (100) | T | 73.7/34.8 |
| R342 | 7030003320 | S.RES ERJ3GEYJ 101 V (100) | T | 66.9/37.3 |
| R343 | 7030006601 | S.RES ERA3YED 272V (2.7 K) | T | 73.7/37.4 |
| R344 | 7030010390 | S.RES ERA3YED 821V (820) | T | 65.6/33.6 |
| R345 | 7030009691 | S.RES ERA3YED 101V (100) | T | 66.2/31.7 |
| R371 | 7030003320 | S.RES ERJ3GEYJ 101 V (100) | T | 63.4/43.8 |
| R372 | 7030003320 | S.RES ERJ3GEYJ 101 V (100) | T | 55.3/46.3 |
| R373 | 7030006601 | S.RES ERA3YED 272V (2.7 K) | T | 63.4/45.6 |
| R374 | 7030010390 | S.RES ERA3YED 821V (820) | T | 54.7/41.8 |
| R375 | 7030009691 | S.RES ERA3YED 101V (100) | T | 56/40.5 |
| R401 | 7030009591 | S.RES ERA3YED 472V (4.7 K) | T | 53.1/42.5 |
| R402 | 7030009591 | S.RES ERA3YED 472V (4.7 K) | T | 51.8/44 |
| R403 | 7030003640 | S.RES ERJ3GEYJ 473 V (47 K) | T | 54.1/38.7 |
| R404 | 7030003200 | S.RES ERJ3GEYJ 100 V (10) | T | 50/40 |
| R405 | 7030003320 | S.RES ERJ3GEYJ 101 V (100) | T | 51.1/38.1 |
| R406 | 7030003640 | S.RES ERJ3GEYJ 473 V (47 K) | T | 49.8/38.1 |
| R407 | 7030003460 | S.RES ERJ3GEYJ 152 V (1.5 K) | B | 46.8/36 |
| R409 | 7030003640 | S.RES ERJ3GEYJ 473 V (47 K) | T | 52.3/23.8 |
| R410 | 7030003640 | S.RES ERJ3GEYJ 473 V (47 K) | T | 47.2/23.8 |
| R411 | 7030003640 | S.RES ERJ3GEYJ 473 V (47 K) | T | 49.8/23.8 |
| R412 | 7030003520 | S.RES ERJ3GEYJ 472 V (4.7 K) | T | 56/22.3 |
| R413 | 7030003520 | S.RES ERJ3GEYJ 472 V (4.7 K) | T | 54.1/21.9 |
| R451 | 7030003800 | S.RES ERJ3GEYJ 105 V (1 M) | T | 42.6/36.6 |
| R501 | 7030006521 | S.RES ERA3YED 561V (560) | T | 76.1/29.9 |
| R502 | 7030003360 | S.RES ERJ3GEYJ 221 V (220) | T | 70.3/23.4 |
| R503 | 7030003380 | S.RES ERJ3GEYJ 331 V (330) | T | 65.3/28.9 |

M.=Mounted side (T: Mounted on the Top side, B: Mounted on the Bottom side)
S.=Surface mount

## [DSP-B UNIT]

| REF NO. | PARTS NO. | DESCRIPTION | M. | H/V LOCATION |
|---|---|---|---|---|
| R504 | 7030003680 | S.RES ERJ3GEYJ 104 V (100 K) | T | 65.3/27.6 |
| R551 | 7030003320 | S.RES ERJ3GEYJ 101 V (100) | T | 49.5/8.6 |
| R559 | 7030003640 | S.RES ERJ3GEYJ 473 V (47 K) | T | 59.8/10.5 |
| R601 | 7030006521 | S.RES ERA3YED 561V (560) | T | 63.1/20.7 |
| R602 | 7030007661 | S.RES ERA3YED 331V (330) | T | 64/22 |
| R603 | 7030007661 | S.RES ERA3YED 331V (330) | T | 59/19.8 |
| R604 | 7030009961 | S.RES ERA3YED 221V (220) | T | 68.7/21 |
| R605 | 7030007661 | S.RES ERA3YED 331V (330) | T | 65.7/20.7 |
| R606 | 7030003320 | S.RES ERJ3GEYJ 101 V (100) | T | 67.1/13.9 |
| R607 | 7030003320 | S.RES ERJ3GEYJ 101 V (100) | T | 61.9/13.9 |
| R651 | 7030006521 | S.RES ERA3YED 561V (560) | T | 64.3/10.6 |
| R652 | 7030007661 | S.RES ERA3YED 331V (330) | T | 65.3/11.9 |
| R653 | 7030007661 | S.RES ERA3YED 331V (330) | T | 62.1/10.1 |
| R654 | 7030009961 | S.RES ERA3YED 221V (220) | T | 69.5/10.6 |
| R655 | 7030007661 | S.RES ERA3YED 331V (330) | T | 66.9/10.6 |
| R658 | 7030003320 | S.RES ERJ3GEYJ 101 V (100) | T | 67.7/3.8 |
| R659 | 7030003320 | S.RES ERJ3GEYJ 101 V (100) | T | 64/3.8 |
| R701 | 7030010770 | S.RES ERA3YED 681V (680) | T | 71.3/21 |
| R702 | 7030009861 | S.RES ERA3YED 471V (470) | T | 74.8/22.7 |
| R703 | 7030010770 | S.RES ERA3YED 681V (680) | T | 70.5/13.5 |
| R704 | 7030009861 | S.RES ERA3YED 471V (470) | T | 77.2/13.3 |
| R705 | 7030009691 | S.RES ERA3YED 101V (100) | T | 77.4/22.2 |
| R706 | 7030003320 | S.RES ERJ3GEYJ 101 V (100) | T | 77.3/20.9 |
| R707 | 7030003320 | S.RES ERJ3GEYJ 101 V (100) | T | 74.1/14.1 |
| R801 | 7030003650 | S.RES ERJ3GEYJ 563 V (56 K) | T | 78/27.2 |
| R802 | 7030003680 | S.RES ERJ3GEYJ 104 V (100 K) | T | 78/25.9 |
| R803 | 7030003480 | S.RES ERJ3GEYJ 222 V (2.2 K) | T | 78.7/24 |
| R804 | 7030003490 | S.RES ERJ3GEYJ 272 V (2.7 K) | T | 78/29.8 |
| R805 | 7030003340 | S.RES ERJ3GEYJ 151 V (150) | T | 78/28.5 |
| R901 | 7030003860 | S.RES ERJ3GE JPW V | T | 46.6/21 |
| R962 | 7030003320 | S.RES ERJ3GEYJ 101 V (100) | T | 12.1/16.8 |
| R963 | 7030003320 | S.RES ERJ3GEYJ 101 V (100) | T | 11.9/15.5 |
| R964 | 7030003320 | S.RES ERJ3GEYJ 101 V (100) | T | 11.9/14.2 |
| R965 | 7030003320 | S.RES ERJ3GEYJ 101 V (100) | T | 11.9/12.9 |
| R967 | 7030003320 | S.RES ERJ3GEYJ 101 V (100) | T | 13.6/37.8 |
| R968 | 7030003320 | S.RES ERJ3GEYJ 101 V (100) | T | 11.9/11.6 |
| R969 | 7030003320 | S.RES ERJ3GEYJ 101 V (100) | T | 13.6/48.2 |
| R970 | 7030003320 | S.RES ERJ3GEYJ 101 V (100) | T | 13.6/46.9 |
| R971 | 7030003320 | S.RES ERJ3GEYJ 101 V (100) | T | 13.6/45.6 |
| R972 | 7030003320 | S.RES ERJ3GEYJ 101 V (100) | T | 13.6/44.3 |
| R973 | 7030003320 | S.RES ERJ3GEYJ 101 V (100) | T | 13.6/43 |
| R974 | 7030003320 | S.RES ERJ3GEYJ 101 V (100) | T | 13.6/41.7 |
| R975 | 7030003320 | S.RES ERJ3GEYJ 101 V (100) | T | 13.6/40.4 |
| R976 | 7030003320 | S.RES ERJ3GEYJ 101 V (100) | T | 13.6/39.1 |
| | | | | |
| C1 | 4030011600 | S.CER C1608 JB 1E 104K-T | B | 15.2/30.5 |
| C2 | 4030011600 | S.CER C1608 JB 1E 104K-T | B | 41.8/30.7 |
| C3 | 4030011600 | S.CER C1608 JB 1E 104K-T | B | 18/32.9 |
| C4 | 4030011600 | S.CER C1608 JB 1E 104K-T | B | 39.4/32.9 |
| C5 | 4030011600 | S.CER C1608 JB 1E 104K-T | B | 23/26.3 |
| C6 | 4030011600 | S.CER C1608 JB 1E 104K-T | B | 24.3/26.3 |
| C7 | 4030011600 | S.CER C1608 JB 1E 104K-T | B | 28.6/26.3 |
| C8 | 4030011600 | S.CER C1608 JB 1E 104K-T | B | 29.9/26.3 |
| C9 | 4030011600 | S.CER C1608 JB 1E 104K-T | B | 33.8/26.3 |
| C10 | 4030011600 | S.CER C1608 JB 1E 104K-T | B | 21.5/23.3 |
| C11 | 4030011600 | S.CER C1608 JB 1E 104K-T | B | 36/23.7 |
| C12 | 4030011600 | S.CER C1608 JB 1E 104K-T | T | 13.7/21 |
| C13 | 4030011600 | S.CER C1608 JB 1E 104K-T | B | 22.2/20.2 |
| C14 | 4030011600 | S.CER C1608 JB 1E 104K-T | B | 36/21.1 |
| C15 | 4030011600 | S.CER C1608 JB 1E 104K-T | B | 22.2/18.9 |
| C16 | 4030011600 | S.CER C1608 JB 1E 104K-T | B | 36/18.5 |
| C17 | 4030011600 | S.CER C1608 JB 1E 104K-T | T | 43.5/20 |
| C18 | 4030011600 | S.CER C1608 JB 1E 104K-T | B | 22.2/15.2 |
| C19 | 4030011600 | S.CER C1608 JB 1E 104K-T | B | 34.7/14.4 |
| C20 | 4030011600 | S.CER C1608 JB 1E 104K-T | B | 23.1/13.3 |
| C21 | 4030011600 | S.CER C1608 JB 1E 104K-T | B | 24.4/13.3 |
| C22 | 4030011600 | S.CER C1608 JB 1E 104K-T | B | 28.1/13.3 |
| C23 | 4030011600 | S.CER C1608 JB 1E 104K-T | B | 32.6/12.6 |
| C24 | 4030011600 | S.CER C1608 JB 1E 104K-T | B | 35.2/12.6 |
| C25 | 4030011600 | S.CER C1608 JB 1E 104K-T | B | 17.3/6.7 |
| C26 | 4030011600 | S.CER C1608 JB 1E 104K-T | B | 33.1/6.8 |
| C27 | 4030011600 | S.CER C1608 JB 1E 104K-T | B | 41.8/11.1 |
| C28 | 4030011600 | S.CER C1608 JB 1E 104K-T | B | 15.4/8.2 |
| C29 | 4030011600 | S.CER C1608 JB 1E 104K-T | B | 40.9/6.8 |
| C30 | 4030011600 | S.CER C1608 JB 1E 104K-T | T | 35.2/5 |
| C31 | 4030011600 | S.CER C1608 JB 1E 104K-T | T | 28.5/5.2 |
| C32 | 4030011600 | S.CER C1608 JB 1E 104K-T | T | 37.8/5 |
| C33 | 4030011600 | S.CER C1608 JB 1E 104K-T | T | 18.5/35.2 |
| C34 | 4030011600 | S.CER C1608 JB 1E 104K-T | T | 36.4/35 |
| C35 | 4030011600 | S.CER C1608 JB 1E 104K-T | B | 26/32.9 |
| C36 | 4030011600 | S.CER C1608 JB 1E 104K-T | B | 29.3/32.9 |
| C37 | 4030011600 | S.CER C1608 JB 1E 104K-T | B | 36.8/32.9 |
| C38 | 4030011600 | S.CER C1608 JB 1E 104K-T | B | 15.2/27.9 |
| C39 | 4030011600 | S.CER C1608 JB 1E 104K-T | B | 22.4/32.9 |
| C40 | 4030011600 | S.CER C1608 JB 1E 104K-T | B | 26/26.3 |
| C41 | 4030011600 | S.CER C1608 JB 1E 104K-T | B | 21.7/26.3 |
| C42 | 4030011600 | S.CER C1608 JB 1E 104K-T | B | 27.3/26.3 |
| C43 | 4030011600 | S.CER C1608 JB 1E 104K-T | B | 32.5/26.3 |
| C44 | 4030011600 | S.CER C1608 JB 1E 104K-T | B | 35.1/26.3 |
| C45 | 4030011600 | S.CER C1608 JB 1E 104K-T | B | 41.8/26.8 |
| C46 | 4030011600 | S.CER C1608 JB 1E 104K-T | B | 15.3/24.9 |
| C47 | 4030011600 | S.CER C1608 JB 1E 104K-T | T | 43.5/29 |
| C48 | 4030011600 | S.CER C1608 JB 1E 104K-T | B | 22.2/21.5 |
| C49 | 4030011600 | S.CER C1608 JB 1E 104K-T | B | 41.8/17.9 |
| C50 | 4030011600 | S.CER C1608 JB 1E 104K-T | B | 22.2/17.6 |
| C51 | 4030011600 | S.CER C1608 JB 1E 104K-T | B | 36/15.9 |
| C52 | 4030011600 | S.CER C1608 JB 1E 104K-T | B | 15.8/11.6 |
| C53 | 4030011600 | S.CER C1608 JB 1E 104K-T | B | 21.8/13.3 |
| C54 | 4030011600 | S.CER C1608 JB 1E 104K-T | T | 42.9/9.9 |
| C55 | 4030011600 | S.CER C1608 JB 1E 104K-T | B | 29.4/13.3 |
| C56 | 4030011600 | S.CER C1608 JB 1E 104K-T | B | 25/6.7 |
| C57 | 4030011600 | S.CER C1608 JB 1E 104K-T | B | 29.8/6.8 |
| C58 | 4030011600 | S.CER C1608 JB 1E 104K-T | B | 38.3/6.8 |
| C59 | 4030011600 | S.CER C1608 JB 1E 104K-T | T | 20.3/5.3 |

## [DSP-B UNIT]

| REF NO. | PARTS NO. | DESCRIPTION | M. | H/V LOCATION |
|---|---|---|---|---|
| C60 | 4510007130 | S.ELE EEFCD 0J 470R | T | 19.6/44 |
| C61 | 4550007480 | S.TAN F930J106MAABMA | B | 44.8/29.7 |
| C62 | 4510007130 | S.ELE EEFCD 0J 470R | T | 25.7/43.9 |
| C101 | 4030011600 | S.CER C1608 JB 1E 104K-T | B | 35.7/6.8 |
| C102 | 4550007480 | S.TAN F930J106MAABMA | B | 30.6/2.6 |
| C151 | 4030011600 | S.CER C1608 JB 1E 104K-T | B | 45.6/10 |
| C152 | 4030007030 | S.CER C1608 CH 1H 150J-T | B | 46.1/6.2 |
| C153 | 4030007030 | S.CER C1608 CH 1H 150J-T | B | 43.1/8 |
| C171 | 4030011600 | S.CER C1608 JB 1E 104K-T | T | 41.3/2.7 |
| C181 | 4030011600 | S.CER C1608 JB 1E 104K-T | T | 31/4.3 |
| C191 | 4030011600 | S.CER C1608 JB 1E 104K-T | T | 22.6/1.2 |
| C201 | 4030011600 | S.CER C1608 JB 1E 104K-T | B | 41.4/43.3 |
| C301 | 4340000250 | S.MLR ECHU 1C 104JX5 | T | 77.9/44 |
| C302 | 4550007500 | S.TAN F931D106MBABMA | B | 76.5/43.7 |
| C303 | 4030011600 | S.CER C1608 JB 1E 104K-T | T | 75.6/40.9 |
| C304 | 4550007500 | S.TAN F931D106MBABMA | B | 71.7/43.7 |
| C305 | 4030011600 | S.CER C1608 JB 1E 104K-T | T | 67.6/46.1 |
| C306 | 4030007050 | S.CER C1608 CH 1H 220J-T | T | 72.4/40.1 |
| C331 | 4030011600 | S.CER C1608 JB 1E 104K-T | T | 78.8/32.8 |
| C332 | 4550007520 | S.TAN F931A106MAABMA | B | 67.9/35.2 |
| C333 | 4030011600 | S.CER C1608 JB 1E 104K-T | T | 79.5/35.8 |
| C341 | 4550007500 | S.TAN F931D106MBABMA | B | 73.1/32.4 |
| C342 | 4030011600 | S.CER C1608 JB 1E 104K-T | T | 73.7/31.6 |
| C343 | 4550007500 | S.TAN F931D106MBABMA | B | 73.2/38.1 |
| C344 | 4030011600 | S.CER C1608 JB 1E 104K-T | T | 65.6/37.3 |
| C345 | 4340000250 | S.MLR ECHU 1C 104JX5 | T | 76.7/38.1 |
| C346 | 4030018580 | S.CER C1608 CH 1H 821J-T | T | 66.9/33.6 |
| C347 | 4030011600 | S.CER C1608 JB 1E 104K-T | T | 66.1/35.5 |
| C348 | 4030007050 | S.CER C1608 CH 1H 220J-T | T | 70.9/30.9 |
| C371 | 4550007500 | S.TAN F931D106MBABMA | B | 59.8/43.8 |
| C372 | 4030011600 | S.CER C1608 JB 1E 104K-T | T | 63.4/42.5 |
| C373 | 4550007500 | S.TAN F931D106MBABMA | B | 50.1/43.9 |
| C374 | 4030011600 | S.CER C1608 JB 1E 104K-T | T | 53.4/45.5 |
| C375 | 4340000250 | S.MLR ECHU 1C 104JX5 | T | 68.1/42.6 |
| C376 | 4030018580 | S.CER C1608 CH 1H 821J-T | T | 56/43.1 |
| C377 | 4030011600 | S.CER C1608 JB 1E 104K-T | T | 55.3/45 |
| C378 | 4030007050 | S.CER C1608 CH 1H 220J-T | T | 59.4/39.5 |
| C401 | 4550007520 | S.TAN F931A106MAABMA | B | 54.9/43.8 |
| C402 | 4030017840 | S.CER C2012 CH 1H 222J-T | T | 58.1/37.6 |
| C403 | 4550007480 | S.TAN F930J106MAABMA | B | 63.1/35.2 |
| C404 | 4030011810 | S.CER C1608 JB 1A 224K-T | T | 61.5/37.4 |
| C405 | 4550007480 | S.TAN F930J106MAABMA | B | 58.3/35.2 |
| C406 | 4030011810 | S.CER C1608 JB 1A 224K-T | T | 63.5/36.7 |
| C407 | 4550007480 | S.TAN F930J106MAABMA | B | 50.4/36.1 |
| C408 | 4030011600 | S.CER C1608 JB 1E 104K-T | T | 54.1/37.4 |
| C409 | 4030011600 | S.CER C1608 JB 1E 104K-T | T | 54.1/23.2 |
| C410 | 4030009000 | S.CER C2012 JB 1C 224K-T | T | 62.1/24.2 |
| C411 | 4550007480 | S.TAN F930J106MAABMA | B | 63.1/28.4 |
| C412 | 4550007480 | S.TAN F930J106MAABMA | B | 58.3/29.1 |
| C413 | 4030009000 | S.CER C2012 JB 1C 224K-T | T | 59/22.5 |
| C414 | 4030011600 | S.CER C1608 JB 1E 104K-T | T | 54.1/24.5 |
| C415 | 4550007520 | S.TAN F931A106MAABMA | B | 53/26.5 |
| C416 | 4550007520 | S.TAN F931A106MAABMA | B | 53/31.3 |
| C417 | 4030017840 | S.CER C2012 CH 1H 222J-T | T | 58/24.2 |
| C450 | 4030011600 | S.CER C1608 JB 1E 104K-T | T | 43.1/35.3 |
| C451 | 4030011600 | S.CER C1608 JB 1E 104K-T | T | 43.6/42.9 |
| C452 | 4030006860 | S.CER C1608 JB 1H 102K-T | T | 40.8/39.6 |
| C501 | 4030011600 | S.CER C1608 JB 1E 104K-T | T | 74.8/24 |
| C502 | 4550007500 | S.TAN F931D106MBABMA | B | 77.5/33.1 |
| C503 | 4030011600 | S.CER C1608 JB 1E 104K-T | T | 71.6/23.4 |
| C504 | 4550007500 | S.TAN F931D106MBABMA | B | 67.9/29.1 |
| C506 | 4030007090 | S.CER C1608 CH 1H 470J-T | T | 67.1/28.4 |
| C507 | 4030007090 | S.CER C1608 CH 1H 470J-T | T | 76.1/27.3 |
| C551 | 4550007520 | S.TAN F931A106MAABMA | B | 50.3/8.7 |
| C552 | 4030011600 | S.CER C1608 JB 1E 104K-T | T | 49.5/5.5 |
| C553 | 4550007520 | S.TAN F931A106MAABMA | B | 55/13.3 |
| C554 | 4030011600 | S.CER C1608 JB 1E 104K-T | T | 60/7.6 |
| C555 | 4030011600 | S.CER C1608 JB 1E 104K-T | T | 59.8/4.6 |
| C556 | 4550007480 | S.TAN F930J106MAABMA | B | 53.6/7.1 |
| C557 | 4030011600 | S.CER C1608 JB 1E 104K-T | T | 60.7/2.8 |
| C558 | 4550007520 | S.TAN F931A106MAABMA | B | 53.6/4.3 |
| C601 | 4550007480 | S.TAN F930J106MAABMA | B | 61.3/17.2 |
| C602 | 4030018510 | S.CER C2012 CH 1H 682J-T | T | 58.8/16.5 |
| C603 | 4550007500 | S.TAN F931D106MBABMA | B | 68.2/15 |
| C604 | 4030011600 | S.CER C1608 JB 1E 104K-T | T | 58.2/14.2 |
| C605 | 4030011600 | S.CER C1608 JB 1E 104K-T | T | 64.5/13.9 |
| C606 | 4550007500 | S.TAN F931D106MBABMA | B | 69.2/19.2 |
| C607 | 4030018510 | S.CER C2012 CH 1H 682J-T | T | 67/22.5 |
| C608 | 4030007050 | S.CER C1608 CH 1H 220J-T | T | 68.3/16.7 |
| C651 | 4550007480 | S.TAN F930J106MAABMA | B | 60.1/9.2 |
| C652 | 4030018510 | S.CER C2012 CH 1H 682J-T | T | 61.9/6.6 |
| C653 | 4550007500 | S.TAN F931D106MBABMA | B | 59.9/2.6 |
| C654 | 4030011600 | S.CER C1608 JB 1E 104K-T | T | 64/2.5 |
| C655 | 4030011600 | S.CER C1608 JB 1E 104K-T | T | 67.7/2.5 |
| C656 | 4550007500 | S.TAN F931D106MBABMA | B | 59.9/6 |
| C657 | 4030018510 | S.CER C2012 CH 1H 682J-T | T | 68.3/12.2 |
| C658 | 4030007050 | S.CER C1608 CH 1H 220J-T | T | 71.4/6.9 |
| C701 | 4030017840 | S.CER C2012 CH 1H 222J-T | T | 74.3/21.1 |
| C702 | 4030017840 | S.CER C2012 CH 1H 222J-T | T | 78.9/13.4 |
| C703 | 4550007500 | S.TAN F931D106MBABMA | B | 75.3/15.7 |
| C704 | 4030011600 | S.CER C1608 JB 1E 104K-T | T | 75.9/12.8 |
| C705 | 4030011600 | S.CER C1608 JB 1E 104K-T | T | 79.4/20.6 |
| C706 | 4550007500 | S.TAN F931D106MBABMA | B | 75.6/21.1 |
| C707 | 4030007050 | S.CER C1608 CH 1H 220J-T | T | 78.7/18 |
| C771 | 4550007480 | S.TAN F930J106MAABMA | B | 49.8/14.1 |
| C772 | 4030011600 | S.CER C1608 JB 1E 104K-T | T | 49.5/15 |
| C773 | 4550007480 | S.TAN F930J106MAABMA | B | 55/18.1 |
| C801 | 4030011600 | S.CER C1608 JB 1E 104K-T | T | 77.4/24 |
| C921 | 4550007510 | S.TAN F931C106MBABMA | B | 66.5/2.6 |
| C922 | 4030011600 | S.CER C1608 JB 1E 104K-T | T | 71/3.6 |
| C923 | 4550002830 | S.TAN TEESVD2 1V 685M12R | B | 78.3/6.5 |
| C924 | 4030011600 | S.CER C1608 JB 1E 104K-T | T | 80.1/8.6 |
| C925 | 4550007510 | S.TAN F931C106MBABMA | B | 67.1/10.5 |
| C926 | 4030011600 | S.CER C1608 JB 1E 104K-T | T | 71.8/12.7 |
| C927 | 4550002830 | S.TAN TEESVD2 1V 685M12R | B | 72.6/6.5 |

M.=Mounted side (T: Mounted on the Top side, B: Mounted on the Bottom side)
S.=Surface mount

## [DSP-B UNIT]

| REF NO. | PARTS NO. | DESCRIPTION | M. | H/V LOCATION |
|---|---|---|---|---|
| C928 | 4030011600 | S.CER C1608 JB 1E 104K-T | T | 79.6/5.2 |
| C961 | 4030011600 | S.CER C1608 JB 1E 104K-T | B | 11.2/15.7 |
| C962 | 4550007520 | S.TAN F931A106MAABMA | B | 12/18.8 |
| C963 | 4030011600 | S.CER C1608 JB 1E 104K-T | B | 10.7/25.4 |
| C964 | 4550007520 | S.TAN F931A106MAABMA | B | 11.4/29.4 |
| J921 | 6910013900 | CNR IMSA-9180S-22A | | |
| J961 | 6910012460 | CNR IMSA-9180S-30A | | |

## [DSP-TX UNIT]

| REF NO. | PARTS NO. | DESCRIPTION | M. | H/V LOCATION |
|---|---|---|---|---|
| IC1 | 1140012211 | S.IC TMS320C6713BZDP225 | T | 28.1/20.4 |
| IC151 | 1130008361 | S.IC TC7SHU04FU (TE85L,JF) | B | 45.5/8.1 |
| IC171 | 1130008041 | S.IC TC7SH04FU (TE85L,JF) | T | 41.3/4.6 |
| IC181 | 1130011150 | S.IC SN74AHC2G08HDCTR | T | 30.2/1.9 |
| IC191 | 1130011150 | S.IC SN74AHC2G08HDCTR | T | 24/3.5 |
| IC201 | 1130012205 | S.IC AT29LV040A-15TU (SX-2590F-4) | | B |
| 29.3/42 | | | | |
| IC203 | 1110006411 | S.IC R3111N111A-TR-F | T | 30.2/36.6 |
| IC301 | 1110006100 | S.IC NJM5534MD-TE1 | T | 72.3/44.4 |
| IC341 | 1110006100 | S.IC NJM5534MD-TE1 | T | 72.1/35.2 |
| IC371 | 1110006100 | S.IC NJM5534MD-TE1 | T | 59.4/44.4 |
| IC401 | 1110006111 | S.IC AK5394AVSP/P | T | 54.2/31 |
| IC451 | 1130006891 | S.IC TC7S04FU (TE85R,F) | T | 42.8/35.8 |
| IC452 | 1130012160 | S.IC SN74LVC1GU04DCKR | T | 42.3/39.8 |
| IC551 | 1190002090 | S.IC AD1854JRSZRL | T | 53.3/5.8 |
| IC601 | 1110006100 | S.IC NJM5534MD-TE1 | T | 53.1/15.2 |
| IC651 | 1110006100 | S.IC NJM5534MD-TE1 | T | 65.3/5 |
| IC701 | 1110006100 | S.IC NJM5534MD-TE1 | T | 63.2/14.8 |
| IC801 | 1110006100 | S.IC NJM5534MD-TE1 | T | 68.4/25.8 |
| IC831 | 1110006100 | S.IC NJM5534MD-TE1 | T | 73.1/15.8 |
| IC871 | 1110006100 | S.IC NJM5534MD-TE1 | T | 77/26.1 |
| FI101 | 2040000790 | S.LC EXCCET103U | T | 36.5/2.2 |
| X151 | 6050011660 | S.XTL CR-754 (30.000 MHz) | B | 40.5/2.9 |
| L1 | 6200003950 | S.COL HF50ACC 322513-T | B | 45/39.6 |
| L2 | 6180003501 | S.COL SLF6028T-100M1R3-PF | B | 13.6/35.4 |
| L3 | 6200003640 | S.COL MLF1608E 100K-T | B | 10.9/7.7 |
| L401 | 6200003950 | S.COL HF50ACC 322513-T | T | 49.4/43.1 |
| L921 | 6200003950 | S.COL HF50ACC 322513-T | T | 75/3.7 |
| L922 | 6200003950 | S.COL HF50ACC 322513-T | T | 79.7/8.8 |
| L924 | 6200003950 | S.COL HF50ACC 322513-T | T | 75/8.8 |
| L925 | 6200003950 | S.COL HF50ACC 322513-T | T | 79.7/3.7 |
| L961 | 6200003950 | S.COL HF50ACC 322513-T | B | 11.5/11.9 |
| L962 | 6200003950 | S.COL HF50ACC 322513-T | B | 12.6/24 |
| R1 | 7030003560 | S.RES ERJ3GEYJ 103 V (10 K) | B | 43/22.2 |
| R2 | 7030003560 | S.RES ERJ3GEYJ 103 V (10 K) | B | 42.2/24.2 |
| R3 | 7030003560 | S.RES ERJ3GEYJ 103 V (10 K) | B | 43/20.9 |
| R4 | 7030003560 | S.RES ERJ3GEYJ 103 V (10 K) | B | 42.4/13.7 |
| R5 | 7030003440 | S.RES ERJ3GEYJ 102 V (1 K) | B | 23.2/5.5 |
| R6 | 7030003440 | S.RES ERJ3GEYJ 102 V (1 K) | B | 21.9/5.5 |
| R7 | 7030003640 | S.RES ERJ3GEYJ 473 V (47 K) | B | 20.6/5.5 |
| R8 | 7030003440 | S.RES ERJ3GEYJ 102 V (1 K) | B | 13.7/8.1 |
| R9 | 7030003640 | S.RES ERJ3GEYJ 473 V (47 K) | B | 13.7/11.5 |
| R10 | 7030003640 | S.RES ERJ3GEYJ 473 V (47 K) | T | 43.8/13.1 |
| R11 | 7030003460 | S.RES ERJ3GEYJ 152 V (1.5 K) | B | 41.8/8.5 |
| R12 | 7030003560 | S.RES ERJ3GEYJ 103 V (10 K) | B | 26.8/13.8 |
| R151 | 7030003320 | S.RES ERJ3GEYJ 101 V (100) | T | 44.6/5.3 |
| R152 | 7030003800 | S.RES ERJ3GEYJ 105 V (1 M) | B | 43.5/6.2 |
| R171 | 7030003320 | S.RES ERJ3GEYJ 101 V (100) | T | 41.3/1.4 |
| R181 | 7030003560 | S.RES ERJ3GEYJ 103 V (10 K) | T | 6.4/7 |
| R182 | 7030003560 | S.RES ERJ3GEYJ 103 V (10 K) | T | 9.2/7 |
| R183 | 7030003560 | S.RES ERJ3GEYJ 103 V (10 K) | T | 11.8/8.3 |
| R184 | 7030003560 | S.RES ERJ3GEYJ 103 V (10 K) | T | 11.8/7 |
| R201 | 7030003860 | S.RES ERJ3GE JPW V | T | 30.8/39.3 |
| R301 | 7030003440 | S.RES ERJ3GEYJ 102 V (1 K) | T | 79.5/37.7 |
| R302 | 7030009591 | S.RES ERA3YED 472V (4.7 K) | T | 77.6/46.9 |
| R303 | 7030009591 | S.RES ERA3YED 472V (4.7 K) | T | 75.7/46.1 |
| R304 | 7030003320 | S.RES ERJ3GEYJ 101 V (100) | T | 78.1/40.1 |
| R305 | 7030003440 | S.RES ERJ3GEYJ 102 V (1 K) | T | 75.7/43.5 |
| R306 | 7030003320 | S.RES ERJ3GEYJ 101 V (100) | T | 68.9/46.1 |
| R341 | 7030003320 | S.RES ERJ3GEYJ 101 V (100) | T | 76.2/34.6 |
| R342 | 7030003320 | S.RES ERJ3GEYJ 101 V (100) | T | 68.5/38.4 |
| R343 | 7030005321 | S.RES ERA3YED 103V (10 K) | T | 64.5/34.6 |
| R344 | 7030009591 | S.RES ERA3YED 472V (4.7 K) | T | 67/33.9 |
| R345 | 7030009691 | S.RES ERA3YED 101V (100) | T | 67.7/31.9 |
| R371 | 7030003320 | S.RES ERJ3GEYJ 101 V (100) | B | 62.9/42.1 |
| R372 | 7030003320 | S.RES ERJ3GEYJ 101 V (100) | T | 55.3/46.3 |
| R373 | 7030005321 | S.RES ERA3YED 103V (10 K) | T | 63.7/46.2 |
| R374 | 7030009591 | S.RES ERA3YED 472V (4.7 K) | T | 54.7/41.8 |
| R375 | 7030009691 | S.RES ERA3YED 101V (100) | T | 56/40.5 |
| R401 | 7030009591 | S.RES ERA3YED 472V (4.7 K) | T | 53.1/42.5 |
| R402 | 7030009591 | S.RES ERA3YED 472V (4.7 K) | T | 51.6/44 |
| R403 | 7030003640 | S.RES ERJ3GEYJ 473 V (47 K) | T | 54.1/38.7 |
| R404 | 7030003200 | S.RES ERJ3GEYJ 100 V (10) | T | 50/40 |
| R405 | 7030003320 | S.RES ERJ3GEYJ 101 V (100) | T | 51.1/38.1 |
| R406 | 7030003640 | S.RES ERJ3GEYJ 473 V (47 K) | T | 49.8/38.1 |
| R407 | 7030003460 | S.RES ERJ3GEYJ 152 V (1.5 K) | B | 48/35.4 |
| R409 | 7030003640 | S.RES ERJ3GEYJ 473 V (47 K) | T | 51.9/23.8 |
| R410 | 7030003640 | S.RES ERJ3GEYJ 473 V (47 K) | T | 50.6/23.8 |
| R411 | 7030003640 | S.RES ERJ3GEYJ 473 V (47 K) | T | 49/23.8 |
| R412 | 7030003520 | S.RES ERJ3GEYJ 472 V (4.7 K) | T | 57.2/22.2 |
| R413 | 7030003520 | S.RES ERJ3GEYJ 472 V (4.7 K) | T | 57.2/20.9 |
| R414 | 7030003360 | S.RES ERJ3GEYJ 221 V (220) | T | 46/38.2 |
| R451 | 7030003800 | S.RES ERJ3GEYJ 105 V (1 M) | T | 40.4/41.1 |
| R452 | 7030003440 | S.RES ERJ3GEYJ 102 V (1 K) | B | 45.8/35.5 |
| R551 | 7030003360 | S.RES ERJ3GEYJ 221 V (220) | B | 54/9.3 |
| R601 | 7030006521 | S.RES ERA3YED 561V (560) | T | 50.2/18.6 |
| R602 | 7030007661 | S.RES ERA3YED 331V (330) | T | 50.2/19.9 |
| R603 | 7030007661 | S.RES ERA3YED 331V (330) | T | 48.3/17.1 |
| R604 | 7030009961 | S.RES ERA3YED 221V (220) | T | 55.4/18.6 |
| R605 | 7030007661 | S.RES ERA3YED 331V (330) | T | 52.8/18.6 |
| R606 | 7030003320 | S.RES ERJ3GEYJ 101 V (100) | B | 51.4/24.7 |
| R607 | 7030003320 | S.RES ERJ3GEYJ 101 V (100) | B | 52.2/13.1 |
| R651 | 7030006521 | S.RES ERA3YED 561V (560) | T | 62.5/8.4 |
| R652 | 7030007661 | S.RES ERA3YED 331V (330) | T | 63.5/9.7 |
| R653 | 7030007661 | S.RES ERA3YED 331V (330) | T | 60.3/8.2 |
| R654 | 7030009961 | S.RES ERA3YED 221V (220) | T | 67.7/8.4 |
| R655 | 7030007661 | S.RES ERA3YED 331V (330) | T | 65.1/8.4 |

M.=Mounted side (T: Mounted on the Top side, B: Mounted on the Bottom side)
S.=Surface mount

## [DSP-TX UNIT]

| REF NO. | PARTS NO. | DESCRIPTION | M. | H/V LOCATION |
|---|---|---|---|---|
| R656 | 7030003320 | S.RES ERJ3GEYJ 101 V (100) | B | 67.2/8.2 |
| R657 | 7030003320 | S.RES ERJ3GEYJ 101 V (100) | B | 65.1/2.8 |
| R701 | 7030010770 | S.RES ERA3YED 681V (680) | T | 58/18.2 |
| R702 | 7030009861 | S.RES ERA3YED 471V (470) | T | 62.1/20 |
| R703 | 7030010770 | S.RES ERA3YED 681V (680) | T | 70.7/9.3 |
| R704 | 7030009861 | S.RES ERA3YED 471V (470) | T | 55.6/11.8 |
| R705 | 7030009691 | S.RES ERA3YED 101V (100) | T | 69/12 |
| R706 | 7030003320 | S.RES ERJ3GEYJ 101 V (100) | B | 61/23.1 |
| R707 | 7030003320 | S.RES ERJ3GEYJ 101 V (100) | B | 54.7/14.5 |
| R801 | 7030009591 | S.RES ERA3YED 472V (4.7 K) | T | 65/22.8 |
| R802 | 7030003320 | S.RES ERJ3GEYJ 101 V (100) | T | 63.5/22.8 |
| R803 | 7030005321 | S.RES ERA3YED 103V (10 K) | T | 68.6/21.1 |
| R804 | 7030003320 | S.RES ERJ3GEYJ 101 V (100) | B | 69.7/31.7 |
| R805 | 7030003320 | S.RES ERJ3GEYJ 101 V (100) | B | 72.4/21.7 |
| R831 | 7030009591 | S.RES ERA3YED 472V (4.7 K) | T | 68.4/17.9 |
| R832 | 7030003320 | S.RES ERJ3GEYJ 101 V (100) | T | 68.6/19.7 |
| R833 | 7030005321 | S.RES ERA3YED 103V (10 K) | T | 69.7/15.3 |
| R834 | 7030003320 | S.RES ERJ3GEYJ 101 V (100) | B | 64/23.2 |
| R835 | 7030003320 | S.RES ERJ3GEYJ 101 V (100) | B | 73.4/13.3 |
| R871 | 7030003520 | S.RES ERJ3GEYJ 472 V (4.7 K) | T | 77.8/13.7 |
| R872 | 7030003520 | S.RES ERJ3GEYJ 472 V (4.7 K) | T | 79.1/18.7 |
| R874 | 7030003320 | S.RES ERJ3GEYJ 101 V (100) | B | 71.3/31.7 |
| R875 | 7030003320 | S.RES ERJ3GEYJ 101 V (100) | B | 74.4/21.3 |
| R901 | 7030003860 | S.RES ERJ3GE JPW V | T | 52.7/22 |
| R903 | 7030003860 | S.RES ERJ3GE JPW V | B | 47.7/38 |
| R904 | 7030003860 | S.RES ERJ3GE JPW V | T | 47.1/4.2 |
| R905 | 7030003860 | S.RES ERJ3GE JPW V | B | 48.1/10.2 |
| R962 | 7030003320 | S.RES ERJ3GEYJ 101 V (100) | T | 12.1/17.5 |
| R963 | 7030003320 | S.RES ERJ3GEYJ 101 V (100) | T | 11.9/16.2 |
| R964 | 7030003320 | S.RES ERJ3GEYJ 101 V (100) | T | 11.9/14.9 |
| R967 | 7030003320 | S.RES ERJ3GEYJ 101 V (100) | T | 13.6/38.7 |
| R968 | 7030003320 | S.RES ERJ3GEYJ 101 V (100) | T | 11.9/12.3 |
| R969 | 7030003320 | S.RES ERJ3GEYJ 101 V (100) | T | 13.6/47.8 |
| R970 | 7030003320 | S.RES ERJ3GEYJ 101 V (100) | T | 13.6/46.5 |
| R971 | 7030003320 | S.RES ERJ3GEYJ 101 V (100) | T | 13.6/45.2 |
| R972 | 7030003320 | S.RES ERJ3GEYJ 101 V (100) | T | 13.6/43.9 |
| R973 | 7030003320 | S.RES ERJ3GEYJ 101 V (100) | T | 13.6/42.6 |
| R974 | 7030003320 | S.RES ERJ3GEYJ 101 V (100) | T | 13.6/41.3 |
| R975 | 7030003320 | S.RES ERJ3GEYJ 101 V (100) | T | 13.6/40 |
| R976 | 7030003320 | S.RES ERJ3GEYJ 101 V (100) | T | 11.9/13.6 |
| | | | | |
| C1 | 4030011600 | S.CER C1608 JB 1E 104K-T | B | 15.2/30.4 |
| C2 | 4030011600 | S.CER C1608 JB 1E 104K-T | B | 42.2/30.7 |
| C3 | 4030011600 | S.CER C1608 JB 1E 104K-T | B | 18/32.9 |
| C4 | 4030011600 | S.CER C1608 JB 1E 104K-T | B | 39.4/32.9 |
| C5 | 4030011600 | S.CER C1608 JB 1E 104K-T | B | 23.3/25.8 |
| C6 | 4030011600 | S.CER C1608 JB 1E 104K-T | B | 24.6/25.8 |
| C7 | 4030011600 | S.CER C1608 JB 1E 104K-T | B | 28.7/25.8 |
| C8 | 4030011600 | S.CER C1608 JB 1E 104K-T | B | 30/25.8 |
| C9 | 4030011600 | S.CER C1608 JB 1E 104K-T | B | 33.8/25.8 |
| C10 | 4030011600 | S.CER C1608 JB 1E 104K-T | B | 22.7/23.8 |
| C11 | 4030011600 | S.CER C1608 JB 1E 104K-T | B | 35.5/23.2 |
| C12 | 4030011600 | S.CER C1608 JB 1E 104K-T | T | 12.6/20.7 |
| C13 | 4030011600 | S.CER C1608 JB 1E 104K-T | B | 22.7/20.2 |
| C14 | 4030011600 | S.CER C1608 JB 1E 104K-T | B | 35.5/20.6 |
| C15 | 4030011600 | S.CER C1608 JB 1E 104K-T | B | 22.7/18.9 |
| C16 | 4030011600 | S.CER C1608 JB 1E 104K-T | B | 34.2/18.4 |
| C17 | 4030011600 | S.CER C1608 JB 1E 104K-T | T | 43.5/20 |
| C18 | 4030011600 | S.CER C1608 JB 1E 104K-T | B | 22.7/15.7 |
| C19 | 4030011600 | S.CER C1608 JB 1E 104K-T | B | 34.2/14.9 |
| C20 | 4030011600 | S.CER C1608 JB 1E 104K-T | B | 23.3/13.8 |
| C21 | 4030011600 | S.CER C1608 JB 1E 104K-T | B | 24.6/13.8 |
| C22 | 4030011600 | S.CER C1608 JB 1E 104K-T | B | 28.1/13.8 |
| C23 | 4030011600 | S.CER C1608 JB 1E 104K-T | B | 32.6/13.1 |
| C24 | 4030011600 | S.CER C1608 JB 1E 104K-T | B | 35.2/13.1 |
| C25 | 4030011600 | S.CER C1608 JB 1E 104K-T | B | 17.3/6.7 |
| C26 | 4030011600 | S.CER C1608 JB 1E 104K-T | B | 33.1/6.3 |
| C27 | 4030011600 | S.CER C1608 JB 1E 104K-T | B | 42.4/11.1 |
| C28 | 4030011600 | S.CER C1608 JB 1E 104K-T | B | 15/8.1 |
| C29 | 4030011600 | S.CER C1608 JB 1E 104K-T | B | 40.9/6.6 |
| C30 | 4030011600 | S.CER C1608 JB 1E 104K-T | T | 35.2/5 |
| C31 | 4030011600 | S.CER C1608 JB 1E 104K-T | T | 28.5/5.2 |
| C32 | 4030011600 | S.CER C1608 JB 1E 104K-T | T | 37.8/5 |
| C33 | 4030011600 | S.CER C1608 JB 1E 104K-T | T | 18.6/35.5 |
| C34 | 4030011600 | S.CER C1608 JB 1E 104K-T | T | 37.5/35.5 |
| C35 | 4030011600 | S.CER C1608 JB 1E 104K-T | B | 26/32.9 |
| C36 | 4030011600 | S.CER C1608 JB 1E 104K-T | B | 29.3/32.9 |
| C37 | 4030011600 | S.CER C1608 JB 1E 104K-T | B | 36.8/32.9 |
| C38 | 4030011600 | S.CER C1608 JB 1E 104K-T | B | 15.2/27.7 |
| C39 | 4030011600 | S.CER C1608 JB 1E 104K-T | B | 22.4/32.9 |
| C40 | 4030011600 | S.CER C1608 JB 1E 104K-T | B | 26.1/25.8 |
| C41 | 4030011600 | S.CER C1608 JB 1E 104K-T | B | 22/25.8 |
| C42 | 4030011600 | S.CER C1608 JB 1E 104K-T | B | 27.4/25.8 |
| C43 | 4030011600 | S.CER C1608 JB 1E 104K-T | B | 32.5/25.8 |
| C44 | 4030011600 | S.CER C1608 JB 1E 104K-T | B | 35.1/25.8 |
| C45 | 4030011600 | S.CER C1608 JB 1E 104K-T | B | 42.2/26.8 |
| C46 | 4030011600 | S.CER C1608 JB 1E 104K-T | B | 15.3/24.9 |
| C47 | 4030011600 | S.CER C1608 JB 1E 104K-T | T | 43.5/29 |
| C48 | 4030011600 | S.CER C1608 JB 1E 104K-T | B | 22.7/21.5 |
| C49 | 4030011600 | S.CER C1608 JB 1E 104K-T | B | 42.4/17.9 |
| C50 | 4030011600 | S.CER C1608 JB 1E 104K-T | B | 22.7/17.6 |
| C51 | 4030011600 | S.CER C1608 JB 1E 104K-T | B | 35.5/17.5 |
| C52 | 4030011600 | S.CER C1608 JB 1E 104K-T | B | 15/11.5 |
| C53 | 4030011600 | S.CER C1608 JB 1E 104K-T | B | 22/13.8 |
| C54 | 4030011600 | S.CER C1608 JB 1E 104K-T | T | 43.3/9.9 |
| C55 | 4030011600 | S.CER C1608 JB 1E 104K-T | B | 29.4/13.8 |
| C56 | 4030011600 | S.CER C1608 JB 1E 104K-T | B | 25.1/6.6 |
| C57 | 4030011600 | S.CER C1608 JB 1E 104K-T | B | 29.8/6.2 |
| C58 | 4030011600 | S.CER C1608 JB 1E 104K-T | B | 38.3/6.6 |
| C59 | 4030011600 | S.CER C1608 JB 1E 104K-T | T | 20.3/5.3 |
| C60 | 4510007130 | S.ELE EEFCD 0J 470R | T | 25.4/41.7 |
| C61 | 4550007480 | S.TAN F930J106MAABMA | B | 45.2/29.7 |
| C62 | 4510007130 | S.ELE EEFCD 0J 470R | T | 19.5/41.7 |
| C101 | 4030011600 | S.CER C1608 JB 1E 104K-T | B | 35.7/6.5 |

## [DSP-TX UNIT]

| REF NO. | PARTS NO. | DESCRIPTION | M. | H/V LOCATION |
|---|---|---|---|---|
| C102 | 4550007480 | S.TAN F930J106MAABMA | B | 30.6/2.6 |
| C151 | 4030011600 | S.CER C1608 JB 1E 104K-T | B | 45.5/10.2 |
| C152 | 4030007030 | S.CER C1608 CH 1H 150J-T | B | 46.1/6.2 |
| C153 | 4030007030 | S.CER C1608 CH 1H 150J-T | B | 43.1/8 |
| C171 | 4030011600 | S.CER C1608 JB 1E 104K-T | T | 41.3/2.7 |
| C181 | 4030011600 | S.CER C1608 JB 1E 104K-T | T | 31/4.3 |
| C191 | 4030011600 | S.CER C1608 JB 1E 104K-T | T | 22.6/1.2 |
| C201 | 4030011600 | S.CER C1608 JB 1E 104K-T | B | 42.3/44.3 |
| C301 | 4550007660 | S.TAN F931E105MAABMA | B | 80.4/44.1 |
| C302 | 4550007500 | S.TAN F931D106MBABMA | B | 75.6/44.1 |
| C303 | 4030011600 | S.CER C1608 JB 1E 104K-T | T | 75.7/40.7 |
| C304 | 4550007500 | S.TAN F931D106MBABMA | B | 71.5/44.1 |
| C305 | 4030011600 | S.CER C1608 JB 1E 104K-T | T | 67.6/46.1 |
| C306 | 4030007050 | S.CER C1608 CH 1H 220J-T | T | 72.3/39.8 |
| C341 | 4550007500 | S.TAN F931D106MBABMA | B | 74/34.6 |
| C342 | 4030011600 | S.CER C1608 JB 1E 104K-T | T | 75.5/32.8 |
| C343 | 4550007500 | S.TAN F931D106MBABMA | B | 66.9/36.8 |
| C344 | 4030011600 | S.CER C1608 JB 1E 104K-T | T | 67.2/38.4 |
| C345 | 4550007660 | S.TAN F931E105MAABMA | B | 76.8/38.7 |
| C346 | 4030007140 | S.CER C1608 CH 1H 121J-T | T | 68.5/33.9 |
| C347 | 4030011600 | S.CER C1608 JB 1E 104K-T | T | 67.7/35.9 |
| C348 | 4030007050 | S.CER C1608 CH 1H 220J-T | T | 72/30.6 |
| C371 | 4550007500 | S.TAN F931D106MBABMA | B | 59.8/43.8 |
| C372 | 4030011600 | S.CER C1608 JB 1E 104K-T | T | 63.7/42.9 |
| C373 | 4550007500 | S.TAN F931D106MBABMA | B | 50.1/43.9 |
| C374 | 4030011600 | S.CER C1608 JB 1E 104K-T | T | 53.4/45.5 |
| C375 | 4550007660 | S.TAN F931E105MAABMA | B | 66/43.7 |
| C376 | 4030007140 | S.CER C1608 CH 1H 121J-T | T | 56/43.1 |
| C377 | 4030011600 | S.CER C1608 JB 1E 104K-T | T | 55.3/45 |
| C378 | 4030007050 | S.CER C1608 CH 1H 220J-T | T | 59.4/39.8 |
| C401 | 4550007480 | S.TAN F930J106MAABMA | B | 54.9/43.8 |
| C402 | 4030017840 | S.CER C2012 CH 1H 222J-T | T | 58.1/37.6 |
| C403 | 4550007480 | S.TAN F930J106MAABMA | B | 63.1/35.2 |
| C404 | 4030011810 | S.CER C1608 JB 1A 224K-T | T | 61.5/37.4 |
| C405 | 4550007480 | S.TAN F930J106MAABMA | B | 58.3/36 |
| C406 | 4030011810 | S.CER C1608 JB 1A 224K-T | T | 64.5/32 |
| C407 | 4550007480 | S.TAN F930J106MAABMA | B | 51.1/36.1 |
| C408 | 4030011600 | S.CER C1608 JB 1E 104K-T | T | 54.1/37.4 |
| C410 | 4030009000 | S.CER C2012 JB 1C 224K-T | T | 61/24 |
| C411 | 4550007480 | S.TAN F930J106MAABMA | B | 62.5/28.3 |
| C412 | 4550007480 | S.TAN F930J106MAABMA | B | 58.3/29.9 |
| C413 | 4030009000 | S.CER C2012 JB 1C 224K-T | T | 64.7/28.6 |
| C414 | 4030011600 | S.CER C1608 JB 1E 104K-T | T | 54.2/24.5 |
| C415 | 4550007520 | S.TAN F931A106MAABMA | B | 52.6/29.2 |
| C416 | 4550007480 | S.TAN F930J106MAABMA | B | 56.1/24.4 |
| C417 | 4030017840 | S.CER C2012 CH 1H 222J-T | T | 57.4/24 |
| C450 | 4030011600 | S.CER C1608 JB 1E 104K-T | T | 44.2/39.7 |
| C451 | 4030011600 | S.CER C1608 JB 1E 104K-T | T | 42.9/37.8 |
| C452 | 4030006860 | S.CER C1608 JB 1H 102K-T | T | 42.9/41.9 |
| C453 | 4030007050 | S.CER C1608 CH 1H 220J | B | 45.8/36.8 |
| C551 | 4030011600 | S.CER C1608 JB 1E 104K-T | T | 48/1.7 |
| C552 | 4550007520 | S.TAN F931A106MAABMA | B | 49.8/3.3 |
| C553 | 4550007520 | S.TAN F931A106MAABMA | B | 57.2/8.9 |
| C554 | 4550007520 | S.TAN F931A106MAABMA | B | 55/3.3 |
| C555 | 4030011600 | S.CER C1608 JB 1E 104K-T | T | 58.6/2.5 |
| C556 | 4030011600 | S.CER C1608 JB 1E 104K-T | T | 58.6/5.8 |
| C557 | 4030011600 | S.CER C1608 JB 1E 104K-T | B | 57.7/4.1 |
| C601 | 4550007660 | S.TAN F931E105MAABMA | B | 50.5/9.4 |
| C602 | 4030018510 | S.CER C2012 CH 1H 682J-T | T | 48.3/14.2 |
| C603 | 4550007500 | S.TAN F931D106MBABMA | B | 50.4/15.8 |
| C604 | 4030011600 | S.CER C1608 JB 1E 104K-T | T | 49.6/11.8 |
| C605 | 4030011600 | S.CER C1608 JB 1E 104K-T | T | 52.7/11.8 |
| C606 | 4550007500 | S.TAN F931D106MBABMA | B | 51/20.8 |
| C607 | 4030018510 | S.CER C2012 CH 1H 682J-T | T | 53.2/20.1 |
| C608 | 4030007050 | S.CER C1608 CH 1H 220J-T | T | 57.6/14.5 |
| C651 | 4550007660 | S.TAN F931E105MAABMA | B | 60/8.9 |
| C652 | 4030018510 | S.CER C2012 CH 1H 682J-T | T | 60.1/5.3 |
| C653 | 4550007500 | S.TAN F931D106MBABMA | B | 62.5/3.3 |
| C654 | 4030011600 | S.CER C1608 JB 1E 104K-T | T | 62.5/1.6 |
| C655 | 4030011600 | S.CER C1608 JB 1E 104K-T | T | 69.8/1.6 |
| C656 | 4550007500 | S.TAN F931D106MBABMA | B | 63.6/9.2 |
| C657 | 4030018510 | S.CER C2012 CH 1H 682J-T | T | 66.4/10 |
| C658 | 4030007050 | S.CER C1608 CH 1H 220J-T | T | 69.9/4.4 |
| C701 | 4030017840 | S.CER C2012 CH 1H 222J-T | T | 62.1/18.5 |
| C702 | 4030017840 | S.CER C2012 CH 1H 222J-T | T | 59.2/11.1 |
| C703 | 4550007500 | S.TAN F931D106MBABMA | B | 58.7/15.3 |
| C704 | 4030011600 | S.CER C1608 JB 1E 104K-T | T | 62.4/11.3 |
| C705 | 4030011600 | S.CER C1608 JB 1E 104K-T | T | 65.5/18.2 |
| C706 | 4550007500 | S.TAN F931D106MBABMA | B | 57.7/19.3 |
| C707 | 4030007050 | S.CER C1608 CH 1H 220J-T | T | 67.8/14.1 |
| C801 | 4030006860 | S.CER C1608 JB 1H 102K-T | T | 64.2/24.6 |
| C802 | 4030011600 | S.CER C1608 JB 1E 104K-T | T | 73.3/25 |
| C803 | 4550007480 | S.TAN F930J106MAABMA | B | 76.7/16.6 |
| C804 | 4030011600 | S.CER C1608 JB 1E 104K-T | T | 72/27.9 |
| C805 | 4550007520 | S.TAN F931A106MAABMA | B | 67.2/28.6 |
| C806 | 4030011600 | S.CER C1608 JB 1E 104K-T | T | 72.5/23.1 |
| C807 | 4550007500 | S.TAN F931D106MBABMA | B | 68.4/23.6 |
| C808 | 4030007050 | S.CER C1608 CH 1H 220J-T | T | 69/30.4 |
| C831 | 4030006860 | S.CER C1608 JB 1H 102K-T | T | 69.7/17.9 |
| C832 | 4030011600 | S.CER C1608 JB 1E 104K-T | T | 76.5/16.3 |
| C833 | 4550007480 | S.TAN F930J106MAABMA | B | 69.7/16.8 |
| C834 | 4030011600 | S.CER C1608 JB 1E 104K-T | T | 77.8/17.2 |
| C835 | 4550007520 | S.TAN F931A106MAABMA | B | 64/19.7 |
| C836 | 4030011600 | S.CER C1608 JB 1E 104K-T | T | 76.5/13.7 |
| C837 | 4550007500 | S.TAN F931D106MBABMA | B | 64.7/15.3 |
| C838 | 4030007050 | S.CER C1608 CH 1H 220J-T | T | 73.6/20.5 |
| C871 | 4550007520 | S.TAN F931A106MAABMA | B | 75.5/29.4 |
| C872 | 4030011600 | S.CER C1608 JB 1E 104K-T | T | 73.5/27.9 |
| C873 | 4550007500 | S.TAN F931D106MBABMA | B | 75.6/24.3 |
| C874 | 4030011600 | S.CER C1608 JB 1E 104K-T | T | 78.2/21.5 |
| C875 | 4030007050 | S.CER C1608 CH 1H 220J-T | T | 77.2/30.9 |
| C921 | 4550007510 | S.TAN F931C106MBABMA | B | 69.3/3.8 |
| C922 | 4030011600 | S.CER C1608 JB 1E 104K-T | T | 72.8/3.5 |
| C923 | 4550002830 | S.TAN TEESVD2 1V 685M12R | B | 75.4/6 |
| C924 | 4030011600 | S.CER C1608 JB 1E 104K-T | T | 81.8/8 |

M.=Mounted side (T: Mounted on the Top side, B: Mounted on the Bottom side)
S.=Surface mount

## [DSP-TX UNIT]

| REF NO. | PARTS NO. | DESCRIPTION | M. | H/V LOCATION |
|---|---|---|---|---|
| C925 | 4550007510 | S.TAN F931C106MBABMA | B | 71.1/9.3 |
| C926 | 4030011600 | S.CER C1608 JB 1E 104K-T | T | 72.8/9 |
| C927 | 4550002830 | S.TAN TEESVD2 1V 685M12R | B | 80.7/6 |
| C928 | 4030011600 | S.CER C1608 JB 1E 104K-T | T | 81.8/4.6 |
| C961 | 4030011600 | S.CER C1608 JB 1E 104K-T | B | 11.4/14.9 |
| C962 | 4550007520 | S.TAN F931A106MAABMA | B | 12.2/18.6 |
| C963 | 4030011600 | S.CER C1608 JB 1E 104K-T | B | 10.4/24.8 |
| C964 | 4550007520 | S.TAN F931A106MAABMA | B | 11.4/28.9 |
| J921 | 6910013900 | CNR IMSA-9180S-22A | | |
| J961 | 6910012460 | CNR IMSA-9180S-30A | | |

## [SCOPE UNIT]

| REF NO. | PARTS NO. | DESCRIPTION | M. | H/V LOCATION |
|---|---|---|---|---|
| IC1 | 1110006180 | S.IC UPG2009TB-E3 | T | 85.1/9.6 |
| IC2 | 1180001771 | S.IC TA79L05F (TE12L,F) | T | 24.5/95.6 |
| IC31 | 1110006180 | S.IC UPG2009TB-E3 | T | 86.5/14.1 |
| IC201 | 1180002650 | S.REG SI-3012KS-TL | T | 116.4/64.6 |
| IC401 | 1110006131 | S.IC uPC4094G2-E1-A | T | 15.6/88.6 |
| IC403 | 1110006131 | S.IC uPC4094G2-E1-A | T | 26.9/88.6 |
| IC404 | 1110006131 | S.IC uPC4094G2-E1-A | T | 44/87.6 |
| IC405 | 1110002700 | S.IC NJM2904M-TE1-#FMZB | T | 39.2/70.4 |
| IC501 | 1190002031 | S.IC AD7650ASTZ | T | 55.5/79.2 |
| IC502 | 1130006891 | S.IC TC7S04FU (TE85R,F) | T | 57.7/88 |
| IC505 | 1180002631 | S.REG AD1582BRTZ-REEL7 | T | 55.4/94.6 |
| IC601 | 1140012221 | S.IC TMS320C6711DZDP200 | T | 88.4/81.4 |
| IC602 | 1130011930 | S.IC SN74LVC1G04DCKR | T | 68.2/67.4 |
| IC603 | 1130011930 | S.IC SN74LVC1G04DCKR | T | 70.7/70.3 |
| IC604 | 1130008041 | S.IC TC7SH04FU (TE85L,JF) | B | 67.4/74.6 |
| IC607 | 1110006411 | S.IC R3111N111A-TR-F | B | 104.1/81.1 |
| IC671 | 1130012394 | S.IC AT49BV001AN-55TU | T | 112.8/82.9 |
| IC801 | 1130009230 | S.IC LMX2306TMX/NOPB | T | 65.6/36.5 |
| IC803 | 1130009691 | S.IC TC74HCT7007AF (F) | B | 68/29 |
| IC820 | 1190001961 | S.IC AD9857ASTZ | T | 93.7/35.6 |
| IC903 | 1120002921 | S.IC ADM202EARNZ | T | 96.9/109.1 |
| IC904 | 1130005721 | S.IC TC7W04F (TE12L,F) | T | 107.5/113 |
| IC905 | 1130005252 | S.IC TC74HC08AF (EL,F) | B | 97/109.6 |
| IC906 | 1130009831 | S.IC TC74VHCT04AF (F) | B | 108.4/109.6 |
| Q1 | 1530002060 | S.TR 2SC4081 T106 R | T | 67.4/6.3 |
| Q2 | 1530003851 | S.TR 2SC5551A-F-E | T | 45.7/7.4 |
| Q11 | 1590000680 | S.TR DTC114EUA T106 | T | 78.2/7.4 |
| Q12 | 1590000680 | S.TR DTC114EUA T106 | T | 92.1/6.5 |
| Q31 | 1590000680 | S.TR DTC114EUA T106 | T | 78.4/3.5 |
| Q32 | 1590000680 | S.TR DTC114EUA T106 | T | 92.7/3.5 |
| Q33 | 1590000680 | S.TR DTC114EUA T106 | T | 93/15.3 |
| Q101 | 1530003151 | S.TR 2SC4673D-TD-E | T | 28.8/18.2 |
| Q201 | 1560000561 | S.FET 2SK882-GR (TE85L,F) | T | 11.4/40.4 |
| Q202 | 1560000561 | S.FET 2SK882-GR (TE85L,F) | T | 10.1/45.2 |
| Q301 | 1530003151 | S.TR 2SC4673D-TD-E | T | 21.4/67.9 |
| Q701 | 1530003221 | S.TR 2SC4406-4-TL-E | T | 75.3/54.2 |
| Q720 | 1530003221 | S.TR 2SC4406-4-TL-E | T | 101.9/45.5 |
| Q810 | 1530003221 | S.TR 2SC4406-4-TL-E | T | 73.1/37.7 |
| Q821 | 1560000331 | S.FET 2SK210-GR (TE85R,F) | T | 43.3/45.7 |
| Q841 | 1530002060 | S.TR 2SC4081 T106 R | T | 41.5/37.2 |
| Q842 | 1530003432 | S.TR 2SC5226A-4-TL-E | T | 27.4/31.6 |
| Q843 | 1530003432 | S.TR 2SC5226A-4-TL-E | T | 25/39.9 |
| Q872 | 1590000680 | S.TR DTC114EUA T106 | T | 30.2/32.6 |
| Q903 | 1530002280 | S.TR 2SC4081 T106 S | B | 130.2/111.8 |
| Q904 | 1510000510 | S.TR 2SA1576A T106R | B | 126.1/105.7 |
| Q921 | 1590001330 | S.TR DTA114EUA T106 | T | 54.5/112.7 |
| Q922 | 1590000680 | S.TR DTC114EUA T106 | T | 50.7/112.7 |
| Q923 | 1590001330 | S.TR DTA114EUA T106 | T | 42.9/113.5 |
| Q924 | 1590000680 | S.TR DTC114EUA T106 | T | 40.3/113.5 |
| D1 | 1750000971 | S.DIO CPH5513-TL-E | T | 79.7/14.9 |
| D2 | 1750000971 | S.DIO CPH5513-TL-E | T | 72.5/15.9 |
| D3 | 1750000441 | S.DIO 1SV263-TL-E | T | 72.1/12.8 |
| D4 | 1750000431 | S.DIO HSB88WSTR-E | T | 10.3/68.3 |
| D11 | 1790000620 | S.DIO MA77 (TX) | T | 83.2/4.5 |
| D12 | 1790000620 | S.DIO MA77 (TX) | T | 87.2/4.5 |
| D101 | 1750000431 | S.DIO HSB88WSTR-E | T | 25.7/8.2 |
| D201 | 1710000840 | S.DIO 1SR154-400 TE25 | B | 120.3/65 |
| D401 | 1790001250 | S.DIO MA2S1110G-(TX) | T | 41.2/77.1 |
| D402 | 1790001250 | S.DIO MA2S1110G-(TX) | T | 39.9/75.2 |
| D403 | 1790001250 | S.DIO MA2S1110G-(TX) | T | 33.4/69.5 |
| D821 | 1750000681 | S.VCP 1SV232 (TPH2,F) | T | 57.9/43.2 |
| D822 | 1750000681 | S.VCP 1SV232 (TPH2,F) | T | 57.9/44.9 |
| D902 | 1750000550 | S.DIO 1SS355 TE-17 | B | 129.7/109.5 |
| FI201 | 2030000290 | S.MLH FL-357 (45 MHz) | T | 9.3/29.6 |
| FI501 | 2040000790 | S.LC EXCCET103U | T | 71.2/76 |
| L1 | 6200001831 | S.COL NLV32T-100J | T | 76.3/12.8 |
| L2 | 6200001831 | S.COL NLV32T-100J | T | 75.1/19.1 |
| L3 | 6200001831 | S.COL NLV32T-100J | B | 70.7/15.1 |
| L4 | 6200001831 | S.COL NLV32T-100J | T | 67.3/12.1 |
| L5 | 6150004280 | COL LS-484B (C-14927) | | |
| L6 | 6150004280 | COL LS-484B (C-14927) | | |
| L7 | 6200003261 | S.COL NLV32T-101J | T | 52/16.6 |
| L8 | 6140003790 | COL LR-442 | | |
| L9 | 6200001831 | S.COL NLV32T-100J | T | 41.2/7.5 |
| L10 | 6200001831 | S.COL NLV32T-100J | T | 41.2/3.2 |
| L11 | 6200001831 | S.COL NLV32T-100J | T | 57.3/3.5 |
| L12 | 6200010450 | S.COL C2520C-R82G-A (0.82U) | T | 57.6/15.5 |
| L13 | 6200010940 | S.COL C2520C-39NG-A | T | 68.3/20 |
| L14 | 6200010860 | S.COL C2520C-R10G-A (0.1U) | T | 64.1/19.2 |
| L31 | 6200001831 | S.COL NLV32T-100J | B | 82.6/1.8 |
| L32 | 6200001831 | S.COL NLV32T-100J | B | 78.8/5.2 |
| L33 | 6200001831 | S.COL NLV32T-100J | B | 86.6/6 |
| L34 | 6200001831 | S.COL NLV32T-100J | B | 90.7/3.6 |
| L51 | 6200001831 | S.COL NLV32T-100J | B | 120.5/26 |
| L52 | 6200001831 | S.COL NLV32T-100J | B | 126.5/39.4 |
| L53 | 6200001831 | S.COL NLV32T-100J | T | 47.7/64.3 |
| L54 | 6200001831 | S.COL NLV32T-100J | T | 50.7/64.3 |
| L55 | 6200003950 | S.COL HF50ACC 322513-T | B | 119.3/33.5 |
| L56 | 6200003950 | S.COL HF50ACC 322513-T | T | 116.1/44.6 |
| L57 | 6200003950 | S.COL HF50ACC 322513-T | T | 121.2/27.1 |
| L58 | 6200003950 | S.COL HF50ACC 322513-T | B | 119.3/39.1 |
| L59 | 6200003950 | S.COL HF50ACC 322513-T | T | 119.6/34.4 |
| L60 | 6200003950 | S.COL HF50ACC 322513-T | T | 119.6/37.6 |
| L101 | 6140003530 | COL LR-395 | | |
| L102 | 6140003530 | COL LR-395 | | |
| L103 | 6200003021 | S.COL NLV32T-R33J | T | 22.3/19.7 |
| L104 | 6200001920 | S.COL ELJNC R15K-F | B | 22.7/16.4 |

M.=Mounted side (T: Mounted on the Top side, B: Mounted on the Bottom side)
S.=Surface mount

## [SCOPE UNIT]

| REF NO. | PARTS NO. | DESCRIPTION | M. | H/V LOCATION |
|---|---|---|---|---|
| L201 | 6150004250 | COL LS-471A (C-14922) | | |
| L202 | 6150004280 | COL LS-484B (C-14927) | | |
| L203 | 6150004280 | COL LS-484B (C-14927) | | |
| L204 | 6200001831 | S.COL NLV32T-100J | B | 3.3/46.6 |
| L205 | 6200002431 | S.COL NLV25T-082J | B | 10.4/17.6 |
| L301 | 6140003530 | COL LR-395 | | |
| L302 | 6140003530 | COL LR-395 | | |
| L303 | 6200003041 | S.COL NLV32T-R68J | T | 21/74.1 |
| L304 | 6200001831 | S.COL NLV32T-100J | B | 23.2/72.6 |
| L401 | 6200003171 | S.COL NLV32T-330J | T | 10.4/83.2 |
| L501 | 6200001831 | S.COL NLV32T-100J | T | 53.8/64.3 |
| L502 | 6200001831 | S.COL NLV32T-100J | B | 57.6/69.6 |
| L551 | 6180003501 | S.COL SLF6028T-100M1R3-PF | T | 105.8/64.4 |
| L552 | 6200001831 | S.COL NLV32T-100J | T | 106.3/69.9 |
| L671 | 6200001831 | S.COL NLV32T-100J | T | 110.9/69.9 |
| L701 | 6200005491 | S.COL NLV32T-331J | T | 76/51.4 |
| L720 | 6200001831 | S.COL NLV32T-100J | T | 82/34.6 |
| L721 | 6200001831 | S.COL NLV32T-100J | T | 109.4/41 |
| L722 | 6200001831 | S.COL NLV32T-100J | T | 110.8/45.2 |
| L761 | 6200003011 | S.COL NLV32T-R27J | T | 106.3/22.3 |
| L762 | 6200003021 | S.COL NLV32T-R33J | T | 102.7/23 |
| L763 | 6200003251 | S.COL NLV32T-R39J | T | 97.9/22.4 |
| L764 | 6200003251 | S.COL NLV32T-R39J | T | 93.6/23.4 |
| L801 | 6200005491 | S.COL NLV32T-331J | T | 69.7/40.9 |
| L802 | 6200005491 | S.COL NLV32T-331J | T | 70.3/26.7 |
| L821 | 6200001831 | S.COL NLV32T-100J | T | 61.7/45.7 |
| L822 | 6190001441 | COL #E526GN-110504 | | |
| L823 | 6200001851 | S.COL NLV32T-5R6J | T | 40.7/42.2 |
| L825 | 6200003261 | S.COL NLV32T-101J | T | 51.7/52.2 |
| L841 | 6200003261 | S.COL NLV32T-101J | | B26.8/33 |
| L842 | 6200003031 | S.COL NLV32T-R47J | T | 26.8/34.5 |
| L851 | 6200003431 | S.COL NLV32T-R10J | T | 27.4/45 |
| L852 | 6200001471 | S.COL NLV32T-R12J | T | 27/48.9 |
| L902 | 6200003241 | S.COL NLV32T-221J | T | 128.1/107.7 |
| | | | | |
| R1 | 7030003360 | S.RES ERJ3GEYJ 221 V (220) | T | 79.6/12.5 |
| R2 | 7030003480 | S.RES ERJ3GEYJ 222 V (2.2 K) | T | 70.7/10.8 |
| R3 | 7030003440 | S.RES ERJ3GEYJ 102 V (1 K) | T | 70.7/9.5 |
| R4 | 7030003460 | S.RES ERJ3GEYJ 152 V (1.5 K) | T | 67.8/8.2 |
| R5 | 7030003520 | S.RES ERJ3GEYJ 472 V (4.7 K) | T | 66.6/4.4 |
| R6 | 7030003440 | S.RES ERJ3GEYJ 102 V (1 K) | T | 69.4/5 |
| R7 | 7030003290 | S.RES ERJ3GEYJ 560 V (56) | T | 49.8/17.3 |
| R8 | 7030003440 | S.RES ERJ3GEYJ 102 V (1 K) | T | 48.4/3.5 |
| R9 | 7030003500 | S.RES ERJ3GEYJ 332 V (3.3 K) | T | 46/4.2 |
| R11 | 7310005550 | S.TRI TMC3ADCJ4X 22K | T | 61.7/3.8 |
| R12 | 7030003320 | S.RES ERJ3GEYJ 101 V (100) | T | 46.7/10.6 |
| R14 | 7030003340 | S.RES ERJ3GEYJ 151 V (150) | T | 82.3/2.4 |
| R16 | 7030003440 | S.RES ERJ3GEYJ 102 V (1 K) | T | 80.2/6.7 |
| R17 | 7030003440 | S.RES ERJ3GEYJ 102 V (1 K) | T | 81.5/6.7 |
| R18 | 7030003340 | S.RES ERJ3GEYJ 151 V (150) | T | 87.4/2.4 |
| R20 | 7030003440 | S.RES ERJ3GEYJ 102 V (1 K) | T | 90.2/6.7 |
| R21 | 7030003440 | S.RES ERJ3GEYJ 102 V (1 K) | T | 88.9/6.7 |
| R34 | 7030003440 | S.RES ERJ3GEYJ 102 V (1 K) | T | 78.4/5.5 |
| R35 | 7030003440 | S.RES ERJ3GEYJ 102 V (1 K) | T | 89.4/3.5 |
| R36 | 7030003520 | S.RES ERJ3GEYJ 472 V (4.7 K) | T | 91/14.7 |
| R37 | 7030003500 | S.RES ERJ3GEYJ 332 V (3.3 K) | T | 89.7/14.7 |
| R38 | 7030003520 | S.RES ERJ3GEYJ 472 V (4.7 K) | T | 82/13.9 |
| R39 | 7030003500 | S.RES ERJ3GEYJ 332 V (3.3 K) | T | 83.3/13.9 |
| R51 | 7030003520 | S.RES ERJ3GEYJ 472 V (4.7 K) | T | 80.6/9.8 |
| R52 | 7030003520 | S.RES ERJ3GEYJ 472 V (4.7 K) | T | 90.3/9.9 |
| R53 | 7030003320 | S.RES ERJ3GEYJ 101 V (100) | B | 126/32.3 |
| R54 | 7030003500 | S.RES ERJ3GEYJ 332 V (3.3 K) | T | 81.9/9.8 |
| R55 | 7030003500 | S.RES ERJ3GEYJ 332 V (3.3 K) | T | 88.4/9.8 |
| R61 | 7030003320 | S.RES ERJ3GEYJ 101 V (100) | B | 128.7/49 |
| R62 | 7030003320 | S.RES ERJ3GEYJ 101 V (100) | T | 122.3/50.4 |
| R63 | 7030003320 | S.RES ERJ3GEYJ 101 V (100) | B | 128.7/51 |
| R64 | 7030003320 | S.RES ERJ3GEYJ 101 V (100) | T | 122.3/53.3 |
| R65 | 7030003320 | S.RES ERJ3GEYJ 101 V (100) | B | 128.7/53 |
| R66 | 7030003320 | S.RES ERJ3GEYJ 101 V (100) | T | 123.6/56.7 |
| R71 | 7030003320 | S.RES ERJ3GEYJ 101 V (100) | B | 128.7/55 |
| R72 | 7030003320 | S.RES ERJ3GEYJ 101 V (100) | T | 121.7/47.4 |
| R73 | 7030003320 | S.RES ERJ3GEYJ 101 V (100) | T | 121.7/43.3 |
| R74 | 7030003320 | S.RES ERJ3GEYJ 101 V (100) | B | 128.7/43.4 |
| R75 | 7030003320 | S.RES ERJ3GEYJ 101 V (100) | T | 121.7/44.7 |
| R76 | 7030003320 | S.RES ERJ3GEYJ 101 V (100) | B | 128.7/45.4 |
| R77 | 7030003320 | S.RES ERJ3GEYJ 101 V (100) | T | 121.7/46 |
| R81 | 7030010520 | S.RES ERJ1TYJ 101U (100) | B | 122.9/46.2 |
| R103 | 7030003480 | S.RES ERJ3GEYJ 222 V (2.2 K) | T | 33.8/18 |
| R104 | 7030003320 | S.RES ERJ3GEYJ 101 V (100) | T | 25.9/21.9 |
| R105 | 7030003370 | S.RES ERJ3GEYJ 271 V (270) | B | 18.3/14.3 |
| R106 | 7030003230 | S.RES ERJ3GEYJ 180 V (18) | B | 19.1/11.9 |
| R107 | 7030003370 | S.RES ERJ3GEYJ 271 V (270) | B | 18.3/8.4 |
| R108 | 7030003370 | S.RES ERJ3GEYJ 271 V (270) | B | 14.6/8.4 |
| R109 | 7030003230 | S.RES ERJ3GEYJ 180 V (18) | B | 11.2/9.7 |
| R110 | 7030003370 | S.RES ERJ3GEYJ 271 V (270) | B | 11.2/12 |
| R111 | 7030003550 | S.RES ERJ3GEYJ 822 V (8.2 K) | T | 29.8/14.9 |
| R112 | 7030003320 | S.RES ERJ3GEYJ 101 V (100) | T | 33.8/19.3 |
| R113 | 7030003860 | S.RES ERJ3GE JPW V | B | 19.5/18 |
| R201 | 7030003430 | S.RES ERJ3GEYJ 821 V (820) | T | 11.3/37.1 |
| R202 | 7030003430 | S.RES ERJ3GEYJ 821 V (820) | T | 11.3/35.8 |
| R203 | 7030003280 | S.RES ERJ3GEYJ 470 V (47) | B | 3.1/39.8 |
| R204 | 7030003560 | S.RES ERJ3GEYJ 103 V (10 K) | T | 12/45 |
| R205 | 7030003280 | S.RES ERJ3GEYJ 470 V (47) | B | 6.3/46.6 |
| R206 | 7030003380 | S.RES ERJ3GEYJ 331 V (330) | B | 11.4/54.9 |
| R207 | 7030003220 | S.RES ERJ3GEYJ 150 V (15) | B | 9.3/55.7 |
| R208 | 7030003380 | S.RES ERJ3GEYJ 331 V (330) | B | 10.1/57.7 |
| R209 | 7030003640 | S.RES ERJ3GEYJ 473 V (47 K) | B | 9.9/46.6 |
| R210 | 7030003600 | S.RES ERJ3GEYJ 223 V (22 K) | T | 112.9/63.4 |
| R301 | 7030003320 | S.RES ERJ3GEYJ 101 V (100) | T | 9.8/86.7 |
| R302 | 7030003370 | S.RES ERJ3GEYJ 271 V (270) | B | 10.3/75.4 |
| R303 | 7030003230 | S.RES ERJ3GEYJ 180 V (18) | B | 15.2/74.6 |
| R304 | 7030003370 | S.RES ERJ3GEYJ 271 V (270) | B | 19.1/75.4 |
| R305 | 7030003320 | S.RES ERJ3GEYJ 101 V (100) | T | 23.7/73.9 |
| R306 | 7030003480 | S.RES ERJ3GEYJ 222 V (2.2 K) | T | 21.4/63.4 |

## [SCOPE UNIT]

| REF NO. | PARTS NO. | DESCRIPTION | M. | H/V LOCATION |
|---|---|---|---|---|
| R307 | 7030003550 | S.RES ERJ3GEYJ 822 V (8.2 K) | T | 18.3/66.9 |
| R308 | 7030003340 | S.RES ERJ3GEYJ 151 V (150) | T | 24.4/63.4 |
| R402 | 7030003440 | S.RES ERJ3GEYJ 102 V (1 K) | B | 13.4/89.7 |
| R403 | 7030003440 | S.RES ERJ3GEYJ 102 V (1 K) | B | 16.3/90.4 |
| R404 | 7030003440 | S.RES ERJ3GEYJ 102 V (1 K) | B | 19/86.7 |
| R405 | 7030003440 | S.RES ERJ3GEYJ 102 V (1 K) | B | 22.4/90.5 |
| R410 | 7030003560 | S.RES ERJ3GEYJ 103 V (10 K) | T | 21.3/85.8 |
| R411 | 7030003560 | S.RES ERJ3GEYJ 103 V (10 K) | T | 9.2/91.1 |
| R412 | 7030003560 | S.RES ERJ3GEYJ 103 V (10 K) | T | 13.4/92.1 |
| R413 | 7030003730 | S.RES ERJ3GEYJ 274 V (270 K) | T | 9.8/89.3 |
| R414 | 7030003560 | S.RES ERJ3GEYJ 103 V (10 K) | B | 26.9/88 |
| R415 | 7030003560 | S.RES ERJ3GEYJ 103 V (10 K) | T | 31.6/90 |
| R416 | 7310005510 | S.TRI TMC3ADCS5X 470K | T | 34.5/87 |
| R417 | 7030003630 | S.RES ERJ3GEYJ 393 V (39 K) | T | 43.1/95.4 |
| R418 | 7030003570 | S.RES ERJ3GEYJ 123 V (12 K) | T | 45.4/92.2 |
| R419 | 7030003220 | S.RES ERJ3GEYJ 150 V (15) | T | 47.9/92.3 |
| R420 | 7030003580 | S.RES ERJ3GEYJ 153 V (15 K) | T | 40.9/81.7 |
| R421 | 7030003560 | S.RES ERJ3GEYJ 103 V (10 K) | T | 40.5/85.5 |
| R422 | 7030003560 | S.RES ERJ3GEYJ 103 V (10 K) | T | 42.6/92.2 |
| R423 | 7030003540 | S.RES ERJ3GEYJ 682 V (6.8 K) | T | 43.1/94.1 |
| R425 | 7310005540 | S.TRI TMC3ADC14X 10K | T | 45.3/81.2 |
| R426 | 7030003560 | S.RES ERJ3GEYJ 103 V (10 K) | T | 48.7/76.5 |
| R427 | 7030003560 | S.RES ERJ3GEYJ 103 V (10 K) | T | 39.9/77.2 |
| R428 | 7030003680 | S.RES ERJ3GEYJ 104 V (100 K) | T | 37/75.7 |
| R429 | 7030003650 | S.RES ERJ3GEYJ 563 V (56 K) | T | 34.7/67.7 |
| R430 | 7030003740 | S.RES ERJ3GEYJ 334 V (330 K) | T | 38.8/73.9 |
| R431 | 7030003740 | S.RES ERJ3GEYJ 334 V (330 K) | T | 36.2/73.9 |
| R432 | 7030003640 | S.RES ERJ3GEYJ 473 V (47 K) | T | 39.6/81.7 |
| R433 | 7030003680 | S.RES ERJ3GEYJ 104 V (100 K) | T | 38.8/66.4 |
| R434 | 7030003320 | S.RES ERJ3GEYJ 101 V (100) | T | 33.4/66.9 |
| R435 | 7030003680 | S.RES ERJ3GEYJ 104 V (100 K) | T | 40.1/66.4 |
| R436 | 7030003680 | S.RES ERJ3GEYJ 104 V (100 K) | T | 36.9/67 |
| R437 | 7030003680 | S.RES ERJ3GEYJ 104 V (100 K) | T | 43.8/67.7 |
| R438 | 7030003680 | S.RES ERJ3GEYJ 104 V (100 K) | T | 43.8/70.4 |
| R500 | 7030003860 | S.RES ERJ3GE JPW V | T | 53.2/71.7 |
| R501 | 7030003320 | S.RES ERJ3GEYJ 101 V (100) | T | 55.1/73 |
| R502 | 7030003560 | S.RES ERJ3GEYJ 103 V (10 K) | B | 56.3/74.6 |
| R503 | 7030003560 | S.RES ERJ3GEYJ 103 V (10 K) | B | 59.2/75.4 |
| R504 | 7030003560 | S.RES ERJ3GEYJ 103 V (10 K) | T | 60.8/74.2 |
| R505 | 7030003560 | S.RES ERJ3GEYJ 103 V (10 K) | T | 61.6/76 |
| R506 | 7030003560 | S.RES ERJ3GEYJ 103 V (10 K) | B | 57.3/78.2 |
| R507 | 7030003320 | S.RES ERJ3GEYJ 101 V (100) | T | 61.5/87.1 |
| R509 | 7030003640 | S.RES ERJ3GEYJ 473 V (47 K) | T | 60.5/89.8 |
| R602 | 7030003560 | S.RES ERJ3GEYJ 103 V (10 K) | B | 101.3/75.6 |
| R603 | 7030003440 | S.RES ERJ3GEYJ 102 V (1 K) | B | 83.7/77.3 |
| R604 | 7030003560 | S.RES ERJ3GEYJ 103 V (10 K) | B | 92.1/67.4 |
| R605 | 7030003560 | S.RES ERJ3GEYJ 103 V (10 K) | B | 89.8/65.8 |
| R606 | 7030003440 | S.RES ERJ3GEYJ 102 V (1 K) | T | 79.6/95.8 |
| R607 | 7030003440 | S.RES ERJ3GEYJ 102 V (1 K) | B | 77.6/95.9 |
| R608 | 7030003440 | S.RES ERJ3GEYJ 102 V (1 K) | B | 71.8/88.2 |
| R609 | 7030003560 | S.RES ERJ3GEYJ 103 V (10 K) | T | 83.5/65.8 |
| R610 | 7030003800 | S.RES ERJ3GEYJ 105 V (1 M) | T | 70.5/67.6 |
| R611 | 7030004040 | S.RES ERJ3GEYJ 4R7 V (4.7) | T | 66.2/70.3 |
| R612 | 7030004040 | S.RES ERJ3GEYJ 4R7 V (4.7) | T | 67.5/70.3 |
| R615 | 7030003320 | S.RES ERJ3GEYJ 101 V (100) | T | 72.9/65.7 |
| R616 | 7030003520 | S.RES ERJ3GEYJ 472 V (4.7 K) | T | 73.7/93.5 |
| R617 | 7030003520 | S.RES ERJ3GEYJ 472 V (4.7 K) | T | 72.4/93.5 |
| R618 | 7030003560 | S.RES ERJ3GEYJ 103 V (10 K) | B | 81.8/66.8 |
| R619 | 7030003560 | S.RES ERJ3GEYJ 103 V (10 K) | B | 88/66.8 |
| R620 | 7030003440 | S.RES ERJ3GEYJ 102 V (1 K) | B | 73.2/88.9 |
| R621 | 7030003440 | S.RES ERJ3GEYJ 102 V (1 K) | B | 72.6/84.7 |
| R622 | 7030003860 | S.RES ERJ3GE JPW V | B | 111.9/79.5 |
| R623 | 7030003860 | S.RES ERJ3GE JPW V | B | 106.1/78.5 |
| R633 | 7030003560 | S.RES ERJ3GEYJ 103 V (10 K) | B | 74.7/74.4 |
| R634 | 7030003860 | S.RES ERJ3GE JPW V | T | 74/70.4 |
| R635 | 7030003280 | S.RES ERJ3GEYJ 470 V (47) | T | 73.4/68.4 |
| R636 | 7030003280 | S.RES ERJ3GEYJ 470 V (47) | T | 72.7/70.4 |
| R701 | 7030003240 | S.RES ERJ3GEYJ 220 V (22) | T | 73/51.7 |
| R702 | 7030003560 | S.RES ERJ3GEYJ 103 V (10 K) | T | 77.3/54.4 |
| R703 | 7030003320 | S.RES ERJ3GEYJ 101 V (100) | T | 72.7/55.1 |
| R704 | 7030003280 | S.RES ERJ3GEYJ 470 V (47) | T | 73.3/57 |
| R705 | 7030003340 | S.RES ERJ3GEYJ 151 V (150) | T | 77.4/57 |
| R720 | 7030003370 | S.RES ERJ3GEYJ 271 V (270) | T | 107/43.2 |
| R721 | 7030003560 | S.RES ERJ3GEYJ 103 V (10 K) | T | 104/45.3 |
| R722 | 7030003340 | S.RES ERJ3GEYJ 151 V (150) | T | 107.2/45.9 |
| R723 | 7030003440 | S.RES ERJ3GEYJ 102 V (1 K) | B | 91.7/28.7 |
| R724 | 7030003440 | S.RES ERJ3GEYJ 102 V (1 K) | B | 91.1/30.6 |
| R725 | 7030003440 | S.RES ERJ3GEYJ 102 V (1 K) | B | 87.6/28.5 |
| R726 | 7030003440 | S.RES ERJ3GEYJ 102 V (1 K) | B | 91.2/26.8 |
| R727 | 7030003440 | S.RES ERJ3GEYJ 102 V (1 K) | B | 94.8/43 |
| R729 | 7030003280 | S.RES ERJ3GEYJ 470 V (47) | T | 98.7/45.6 |
| R730 | 7030003560 | S.RES ERJ3GEYJ 103 V (10 K) | B | 96.4/40.1 |
| R731 | 7030003460 | S.RES ERJ3GEYJ 152 V (1.5 K) | T | 105.1/38.6 |
| R732 | 7030003510 | S.RES ERJ3GEYJ 392 V (3.9 K) | T | 106.5/34.2 |
| R734 | 7030003510 | S.RES ERJ3GEYJ 392 V (3.9 K) | T | 102.5/42.7 |
| R735 | 7030003280 | S.RES ERJ3GEYJ 470 V (47) | T | 106.5/30.9 |
| R736 | 7030003280 | S.RES ERJ3GEYJ 470 V (47) | T | 106.5/32.2 |
| R737 | 7030003440 | S.RES ERJ3GEYJ 102 V (1 K) | T | 88.4/24 |
| R738 | 7030003640 | S.RES ERJ3GEYJ 473 V (47 K) | T | 88.1/46.1 |
| R739 | 7030003510 | S.RES ERJ3GEYJ 392 V (3.9 K) | T | 106.5/35.5 |
| R741 | 7030003860 | S.RES ERJ3GE JPW V | B | 109.8/26.2 |
| R742 | 7030003860 | S.RES ERJ3GE JPW V | T | 86.8/46 |
| R744 | 7030003860 | S.RES ERJ3GE JPW V | T | 87.7/26.2 |
| R745 | 7030003860 | S.RES ERJ3GE JPW V | T | 85/27.5 |
| R748 | 7030003860 | S.RES ERJ3GE JPW V | T | 89.7/24 |
| R764 | 7030003370 | S.RES ERJ3GEYJ 271 V (270) | T | 48/21.5 |
| R765 | 7030003230 | S.RES ERJ3GEYJ 180 V (18) | T | 45.6/20.8 |
| R766 | 7030003370 | S.RES ERJ3GEYJ 271 V (270) | T | 43.4/21.5 |
| R767 | 7030003860 | S.RES ERJ3GE JPW V | T | 95.7/21.5 |
| R771 | 7030003860 | S.RES ERJ3GE JPW V | T | 41/20.8 |
| R801 | 7030003440 | S.RES ERJ3GEYJ 102 V (1 K) | B | 68.1/38 |
| R802 | 7030003440 | S.RES ERJ3GEYJ 102 V (1 K) | B | 71.2/35.6 |
| R803 | 7030003440 | S.RES ERJ3GEYJ 102 V (1 K) | B | 68.1/35.7 |
| R806 | 7030003520 | S.RES ERJ3GEYJ 472 V (4.7 K) | T | 62.4/40.1 |
| R808 | 7030003600 | S.RES ERJ3GEYJ 223 V (22 K) | T | 61.7/42.6 |

M.=Mounted side (T: Mounted on the Top side, B: Mounted on the Bottom side)
S.=Surface mount

## [SCOPE UNIT]

| REF NO. | PARTS NO. | DESCRIPTION | | M. | H/V LOCATION |
|---|---|---|---|---|---|
| R809 | 7030003840 | S.RES | ERJ3GEYJ 225 V (2.2 M) | T | 63.9/41.6 |
| R810 | 7030003370 | S.RES | ERJ3GEYJ 271 V (270) | T | 74.1/35.2 |
| R811 | 7030003560 | S.RES | ERJ3GEYJ 103 V (10 K) | T | 73.8/40.2 |
| R812 | 7030003280 | S.RES | ERJ3GEYJ 470 V (47) | T | 71/31.6 |
| R813 | 7030003340 | S.RES | ERJ3GEYJ 151 V (150) | T | 73.8/45.4 |
| R814 | 7030003500 | S.RES | ERJ3GEYJ 332 V (3.3 K) | T | 60.3/41.1 |
| R821 | 7030003680 | S.RES | ERJ3GEYJ 104 V (100 K) | T | 39.3/45.9 |
| R822 | 7030003680 | S.RES | ERJ3GEYJ 104 V (100 K) | T | 46.8/44.6 |
| R823 | 7030003370 | S.RES | ERJ3GEYJ 271 V (270) | T | 43.5/41.7 |
| R841 | 7030003200 | S.RES | ERJ3GEYJ 100 V (10) | T | 37.9/39.9 |
| R842 | 7030003360 | S.RES | ERJ3GEYJ 221 V (220) | T | 42.2/35 |
| R843 | 7030003500 | S.RES | ERJ3GEYJ 332 V (3.3 K) | T | 40.1/39.1 |
| R844 | 7030003540 | S.RES | ERJ3GEYJ 682 V (6.8 K) | T | 38.6/37.8 |
| R845 | 7030003360 | S.RES | ERJ3GEYJ 221 V (220) | T | 38.6/36.5 |
| R846 | 7030003380 | S.RES | ERJ3GEYJ 331 V (330) | T | 40.4/32 |
| R847 | 7030003370 | S.RES | ERJ3GEYJ 271 V (270) | T | 30.5/30 |
| R848 | 7030003540 | S.RES | ERJ3GEYJ 682 V (6.8 K) | T | 28.4/37.3 |
| R849 | 7030003500 | S.RES | ERJ3GEYJ 332 V (3.3 K) | T | 30.3/34.8 |
| R850 | 7030003390 | S.RES | ERJ3GEYJ 391 V (390) | T | 26.5/37.9 |
| R851 | 7030003360 | S.RES | ERJ3GEYJ 221 V (220) | T | 24.4/37.1 |
| R852 | 7030003490 | S.RES | ERJ3GEYJ 272 V (2.7 K) | T | 28.4/40 |
| R853 | 7030003510 | S.RES | ERJ3GEYJ 392 V (3.9 K) | T | 30.3/41 |
| R854 | 7030003360 | S.RES | ERJ3GEYJ 221 V (220) | T | 30.1/42.4 |
| R855 | 7030008180 | S.RES | ERJ12YJ331U (330) | T | 42.5/52.9 |
| R856 | 7030003370 | S.RES | ERJ3GEYJ 271 V (270) | T | 22.9/60.3 |
| R857 | 7030003230 | S.RES | ERJ3GEYJ 180 V (18) | T | 20.7/59.6 |
| R858 | 7030003320 | S.RES | ERJ3GEYJ 101 V (100) | T | 20.7/61.1 |
| R859 | 7030003260 | S.RES | ERJ3GEYJ 330 V (33) | T | 24.4/44.2 |
| R860 | 7030003400 | S.RES | ERJ3GEYJ 471 V (470) | T | 42.4/32 |
| R861 | 7030003860 | S.RES | ERJ3GE JPW V | T | 24.4/60.3 |
| R905 | 7030003620 | S.RES | ERJ3GEYJ 333 V (33 K) | B | 127/108.8 |
| R906 | 7030003540 | S.RES | ERJ3GEYJ 682 V (6.8 K) | B | 128.6/105.8 |
| R907 | 7030003580 | S.RES | ERJ3GEYJ 153 V (15 K) | B | 127.2/111.2 |
| R908 | 7030003640 | S.RES | ERJ3GEYJ 473 V (47 K) | B | 124.9/108.8 |
| R913 | 7030003370 | S.RES | ERJ3GEYJ 271 V (270) | T | 57.4/112.7 |
| R914 | 7030003370 | S.RES | ERJ3GEYJ 271 V (270) | T | 45.9/113.5 |
| R951 | 7030003860 | S.RES | ERJ3GE JPW V | B | 120.4/122.7 |
| R952 | 7030003860 | S.RES | ERJ3GE JPW V | B | 97.5/126.3 |
| R953 | 7030003860 | S.RES | ERJ3GE JPW V | B | 97.5/124.7 |
| R954 | 7030003860 | S.RES | ERJ3GE JPW V | B | 114.7/103.6 |
| R955 | 7030003860 | S.RES | ERJ3GE JPW V | T | 48.6/112.9 |
| R956 | 7030003860 | S.RES | ERJ3GE JPW V | T | 39.7/110.6 |
| | | | | | |
| C1 | 4030006880 | S.CER | C1608 JB 1H 472K-T | T | 84.1/6.7 |
| C2 | 4030006880 | S.CER | C1608 JB 1H 472K-T | T | 86.1/6.7 |
| C3 | 4030006880 | S.CER | C1608 JB 1H 472K-T | T | 82.8/15.8 |
| C4 | 4030011340 | S.CER | C1608 CH 1H 471J-T | T | 76.6/16.1 |
| C5 | 4030011340 | S.CER | C1608 CH 1H 471J-T | T | 74.1/12.9 |
| C6 | 4030006880 | S.CER | C1608 JB 1H 472K-T | T | 74.9/16.1 |
| C7 | 4030006880 | S.CER | C1608 JB 1H 472K-T | T | 70.1/12.8 |
| C8 | 4030006880 | S.CER | C1608 JB 1H 472K-T | T | 71.3/20 |
| C9 | 4030006880 | S.CER | C1608 JB 1H 472K-T | T | 70/15.7 |
| C10 | 4030011600 | S.CER | C1608 JB 1E 104K-T | T | 67.8/9.5 |
| C11 | 4030009510 | S.CER | C1608 CH 1H 010B-T | B | 58.9/16.3 |
| C12 | 4030007040 | S.CER | C1608 CH 1H 180J-T | B | 61.9/10 |
| C13 | 4030007040 | S.CER | C1608 CH 1H 180J-T | B | 53.2/10 |
| C14 | 4030011340 | S.CER | C1608 CH 1H 471J-T | B | 47.6/15 |
| C15 | 4030006880 | S.CER | C1608 JB 1H 472K-T | T | 40.2/16 |
| C16 | 4030006880 | S.CER | C1608 JB 1H 472K-T | T | 49.9/3.5 |
| C17 | 4030006880 | S.CER | C1608 JB 1H 472K-T | B | 38.6/10 |
| C18 | 4030006960 | S.CER | C1608 CH 1H 050C-T | T | 44/10.6 |
| C21 | 4030006880 | S.CER | C1608 JB 1H 472K-T | T | 78.8/57 |
| C22 | 4030006880 | S.CER | C1608 JB 1H 472K-T | B | 93.1/11.6 |
| C23 | 4030011600 | S.CER | C1608 JB 1E 104K-T | T | 90.5/12.8 |
| C24 | 4030006880 | S.CER | C1608 JB 1H 472K-T | T | 85.4/11.8 |
| C31 | 4030006880 | S.CER | C1608 JB 1H 472K-T | T | 78.3/9.4 |
| C32 | 4030006880 | S.CER | C1608 JB 1H 472K-T | T | 82.8/6.7 |
| C33 | 4030006880 | S.CER | C1608 JB 1H 472K-T | T | 90.3/8.6 |
| C34 | 4030006880 | S.CER | C1608 JB 1H 472K-T | T | 87.6/6.7 |
| C35 | 4030006900 | S.CER | C1608 JB 1H 103K-T | T | 83.6/2.4 |
| C36 | 4030006900 | S.CER | C1608 JB 1H 103K-T | T | 80.3/3.3 |
| C37 | 4030006900 | S.CER | C1608 JB 1H 103K-T | T | 86.1/2.4 |
| C38 | 4030006900 | S.CER | C1608 JB 1H 103K-T | T | 90.7/3.5 |
| C39 | 4030006860 | S.CER | C1608 JB 1H 102K-T | T | 88.4/14.7 |
| C40 | 4030006860 | S.CER | C1608 JB 1H 102K-T | T | 84.6/13.9 |
| C41 | 4610001830 | S.TRI | TZB4S100AB10R00 | T | 57.5/19.3 |
| C42 | 4030007030 | S.CER | C1608 CH 1H 150J-T | T | 68.7/15.7 |
| C43 | 4030007120 | S.CER | C1608 CH 1H 820J-T | T | 67.9/17.7 |
| C44 | 4030007100 | S.CER | C1608 CH 1H 560J-T | T | 67/15.7 |
| C45 | 4030007040 | S.CER | C1608 CH 1H 180J-T | T | 64.9/16.4 |
| C46 | 4030008750 | S.CER | C1608 CH 1H 360J-T | T | 64.9/14.9 |
| C51 | 4030006860 | S.CER | C1608 JB 1H 102K-T | T | 83.2/9.8 |
| C52 | 4030006860 | S.CER | C1608 JB 1H 102K-T | T | 87.1/9.8 |
| C53 | 4510008540 | S.ELE | EEE1CA100SR | T | 31.7/95.8 |
| C54 | 4510008540 | S.ELE | EEE1CA100SR | T | 46.9/69.3 |
| C55 | 4030011600 | S.CER | C1608 JB 1E 104K-T | T | 20.4/94.8 |
| C56 | 4510008540 | S.ELE | EEE1CA100SR | T | 16.6/95.8 |
| C57 | 4030011600 | S.CER | C1608 JB 1E 104K-T | T | 27.9/95.9 |
| C101 | 4030006880 | S.CER | C1608 JB 1H 472K-T | T | 33.8/16.7 |
| C102 | 4030007150 | S.CER | C1608 CH 1H 151J-T | T | 24.6/19 |
| C103 | 4030011600 | S.CER | C1608 JB 1E 104K-T | T | 24.6/21.9 |
| C106 | 4030006880 | S.CER | C1608 JB 1H 472K-T | T | 33.8/20.6 |
| C107 | 4030007100 | S.CER | C1608 CH 1H 560J-T | T | 23.1/16.4 |
| C108 | 4030007110 | S.CER | C1608 CH 1H 680J-T | B | 23.7/21.2 |
| C109 | 4030007140 | S.CER | C1608 CH 1H 121J-T | B | 22.4/18.7 |
| C110 | 4030007110 | S.CER | C1608 CH 1H 680J-T | B | 21.6/21.2 |
| C201 | 4030007040 | S.CER | C1608 CH 1H 180J-T | T | 10.8/24.5 |
| C202 | 4030007040 | S.CER | C1608 CH 1H 180J-T | T | 4.7/30.3 |
| C204 | 4030006880 | S.CER | C1608 JB 1H 472K-T | T | 11.3/34.5 |
| C205 | 4030007070 | S.CER | C1608 CH 1H 330J-T | B | 5.8/39.8 |
| C206 | 4030006880 | S.CER | C1608 JB 1H 472K-T | T | 11.3/38.5 |
| C207 | 4030006960 | S.CER | C1608 CH 1H 050C-T | T | 11.2/42.3 |
| C208 | 4030007070 | S.CER | C1608 CH 1H 330J-T | B | 8.4/51 |
| C209 | 4030006880 | S.CER | C1608 JB 1H 472K-T | T | 7.6/46.1 |

## [SCOPE UNIT]

| REF NO. | PARTS NO. | DESCRIPTION | | M. | H/V LOCATION |
|---|---|---|---|---|---|
| C210 | 4030011600 | S.CER | C1608 JB 1E 104K-T | B | 2.1/50.2 |
| C211 | 4030009550 | S.CER | C1608 CH 1H 2R5B-T | T | 10.8/23.2 |
| C212 | 4030006940 | S.CER | C1608 CH 1H 030C-T | T | 4.7/28.9 |
| C213 | 4550007320 | S.TAN | F930J226MAABMA | T | 111.2/63.3 |
| C214 | 4550007320 | S.TAN | F930J226MAABMA | B | 117.7/65.4 |
| C215 | 4030011600 | S.CER | C1608 JB 1E 104K-T | T | 119.9/66.4 |
| C216 | 4030017490 | S.CER | C1608 JB 1A 105K-T | T | 112.9/66.4 |
| C301 | 4030007040 | S.CER | C1608 CH 1H 180J-T | T | 18.8/70.5 |
| C302 | 4030006880 | S.CER | C1608 JB 1H 472K-T | T | 23.7/71.1 |
| C303 | 4030006880 | S.CER | C1608 JB 1H 472K-T | T | 19.9/63.4 |
| C304 | 4030006880 | S.CER | C1608 JB 1H 472K-T | T | 22.9/63.4 |
| C401 | 4030008850 | S.CER | C1608 JB 1H 123K-T | T | 11.1/86.7 |
| C403 | 4030018610 | S.CER | C1608 CH 1H 182J-T | B | 15.6/87.5 |
| C404 | 4030018580 | S.CER | C1608 CH 1H 821J-T | T | 20.9/89.2 |
| C405 | 4030007140 | S.CER | C1608 CH 1H 121J-T | T | 20.9/87.9 |
| C406 | 4030017840 | S.CER | C2012 CH 1H 222J-T | B | 22.6/86.7 |
| C407 | 4030017840 | S.CER | C2012 CH 1H 222J-T | B | 22.6/88.7 |
| C408 | 4030007010 | S.CER | C1608 CH 1H 100D-T | T | 21.6/90.5 |
| C409 | 4030007140 | S.CER | C1608 CH 1H 121J-T | T | 21.6/91.8 |
| C410 | 4030011600 | S.CER | C1608 JB 1E 104K-T | T | 17.7/92.1 |
| C411 | 4030011600 | S.CER | C1608 JB 1E 104K-T | T | 13.4/85.2 |
| C420 | 4030011600 | S.CER | C1608 JB 1E 104K-T | T | 8.5/89.3 |
| C421 | 4030006920 | S.CER | C1608 CH 1H 010C-T | T | 11.1/89.3 |
| C422 | 4030006920 | S.CER | C1608 CH 1H 010C-T | T | 31.6/87.2 |
| C423 | 4030011600 | S.CER | C1608 JB 1E 104K-T | T | 29/92.1 |
| C424 | 4030011600 | S.CER | C1608 JB 1E 104K-T | T | 24.7/85.2 |
| C425 | 4030011600 | S.CER | C1608 JB 1E 104K-T | T | 40.2/95.4 |
| C426 | 4030006900 | S.CER | C1608 JB 1H 103K-T | T | 47.4/89.7 |
| C427 | 4030011600 | S.CER | C1608 JB 1E 104K-T | T | 35.9/81 |
| C428 | 4510008550 | S.ELE | EEE1HA010SR | T | 38/92.2 |
| C429 | 4030011600 | S.CER | C1608 JB 1E 104K-T | T | 47.4/85.4 |
| C431 | 4030006900 | S.CER | C1608 JB 1H 103K-T | T | 38.5/77.2 |
| C432 | 4030011600 | S.CER | C1608 JB 1E 104K-T | T | 41.4/73.9 |
| C433 | 4510008540 | S.ELE | EEE1CA100SR | T | 31.4/73.2 |
| C434 | 4030011600 | S.CER | C1608 JB 1E 104K-T | T | 40.5/88.5 |
| C501 | 4030011600 | S.CER | C1608 JB 1E 104K-T | T | 52.5/73 |
| C502 | 4510008540 | S.ELE | EEE1CA100SR | T | 52.2/68.5 |
| C503 | 4510008540 | S.ELE | EEE1CA100SR | T | 59.3/70.5 |
| C504 | 4030011600 | S.CER | C1608 JB 1E 104K-T | T | 62/78.6 |
| C505 | 4510008540 | S.ELE | EEE1CA100SR | T | 59.5/64.5 |
| C506 | 4030011600 | S.CER | C1608 JB 1E 104K-T | T | 61.6/81.8 |
| C507 | 4510008580 | S.ELE | EEE0JA470SR | T | 51/87.4 |
| C508 | 4030017490 | S.CER | C1608 JB 1A 105K-T | T | 49.3/82.9 |
| C509 | 4030011600 | S.CER | C1608 JB 1E 104K-T | T | 59.6/87.9 |
| C521 | 4510009280 | S.ELE | EEE1EA4R7SR | T | 59.6/93.9 |
| C522 | 4030011600 | S.CER | C1608 JB 1E 104K-T | T | 55.5/92.2 |
| C523 | 4510008550 | S.ELE | EEE1HA010SR | T | 51.1/93.9 |
| C524 | 4030011600 | S.CER | C1608 JB 1E 104K-T | T | 55.2/97 |
| C551 | 4550006960 | S.TAN | TEESVB2 0G 107M8R | T | 99.1/64.3 |
| C601 | 4030011600 | S.CER | C1608 JB 1E 104K-T | B | 99.4/93.9 |
| C602 | 4030011600 | S.CER | C1608 JB 1E 104K-T | B | 98.6/67.3 |
| C603 | 4030011600 | S.CER | C1608 JB 1E 104K-T | B | 100.9/91.6 |
| C604 | 4030011600 | S.CER | C1608 JB 1E 104K-T | B | 101.5/68.5 |
| C605 | 4030011600 | S.CER | C1608 JB 1E 104K-T | B | 93.2/85.9 |
| C606 | 4030011600 | S.CER | C1608 JB 1E 104K-T | B | 93.8/84.5 |
| C607 | 4030011600 | S.CER | C1608 JB 1E 104K-T | B | 93/80.1 |
| C608 | 4030011600 | S.CER | C1608 JB 1E 104K-T | B | 93.8/78.8 |
| C609 | 4030011600 | S.CER | C1608 JB 1E 104K-T | B | 93.7/75.8 |
| C610 | 4030011600 | S.CER | C1608 JB 1E 104K-T | B | 91.3/86.8 |
| C611 | 4030011600 | S.CER | C1608 JB 1E 104K-T | B | 90.3/75.9 |
| C612 | 4030011600 | S.CER | C1608 JB 1E 104K-T | B | 87.8/93.9 |
| C613 | 4030011600 | S.CER | C1608 JB 1E 104K-T | B | 88.4/86.8 |
| C614 | 4030011600 | S.CER | C1608 JB 1E 104K-T | B | 88.5/74 |
| C615 | 4030011600 | S.CER | C1608 JB 1E 104K-T | B | 86.9/86 |
| C616 | 4030011600 | S.CER | C1608 JB 1E 104K-T | B | 87.1/75.9 |
| C617 | 4030011600 | S.CER | C1608 JB 1E 104K-T | T | 87.9/67 |
| C618 | 4030011600 | S.CER | C1608 JB 1E 104K-T | B | 83.9/86 |
| C619 | 4030011600 | S.CER | C1608 JB 1E 104K-T | B | 83.5/75.7 |
| C620 | 4030011600 | S.CER | C1608 JB 1E 104K-T | B | 81.1/86 |
| C621 | 4030011600 | S.CER | C1608 JB 1E 104K-T | B | 81.9/83.6 |
| C622 | 4030011600 | S.CER | C1608 JB 1E 104K-T | B | 81.9/81.9 |
| C623 | 4030011600 | S.CER | C1608 JB 1E 104K-T | B | 81/77.2 |
| C624 | 4030011600 | S.CER | C1608 JB 1E 104K-T | B | 81/74.5 |
| C625 | 4030011600 | S.CER | C1608 JB 1E 104K-T | B | 74.5/91.6 |
| C626 | 4030011600 | S.CER | C1608 JB 1E 104K-T | B | 74.5/77.2 |
| C627 | 4030011600 | S.CER | C1608 JB 1E 104K-T | B | 78.3/67.4 |
| C628 | 4030011600 | S.CER | C1608 JB 1E 104K-T | B | 75.5/93.8 |
| C629 | 4030011600 | S.CER | C1608 JB 1E 104K-T | B | 73.8/69.4 |
| C630 | 4030011600 | S.CER | C1608 JB 1E 104K-T | T | 74/76.5 |
| C631 | 4030011600 | S.CER | C1608 JB 1E 104K-T | T | 74/80.8 |
| C632 | 4030011600 | S.CER | C1608 JB 1E 104K-T | T | 73.9/73.2 |
| C633 | 4030011600 | S.CER | C1608 JB 1E 104K-T | T | 102.8/90.4 |
| C634 | 4030011600 | S.CER | C1608 JB 1E 104K-T | T | 102.9/76.2 |
| C635 | 4030011600 | S.CER | C1608 JB 1E 104K-T | B | 101.2/83.5 |
| C636 | 4030011600 | S.CER | C1608 JB 1E 104K-T | B | 101.2/80.3 |
| C637 | 4030011600 | S.CER | C1608 JB 1E 104K-T | B | 101.4/72 |
| C638 | 4030011600 | S.CER | C1608 JB 1E 104K-T | B | 96/93.9 |
| C639 | 4030011600 | S.CER | C1608 JB 1E 104K-T | T | 104/87.3 |
| C640 | 4030011600 | S.CER | C1608 JB 1E 104K-T | B | 93/82.8 |
| C641 | 4030011600 | S.CER | C1608 JB 1E 104K-T | B | 93.8/87.5 |
| C642 | 4030011600 | S.CER | C1608 JB 1E 104K-T | B | 93.8/81.4 |
| C643 | 4030011600 | S.CER | C1608 JB 1E 104K-T | B | 93/77.2 |
| C644 | 4030011600 | S.CER | C1608 JB 1E 104K-T | B | 93/74.5 |
| C645 | 4030011600 | S.CER | C1608 JB 1E 104K-T | B | 94.8/67.4 |
| C646 | 4030011600 | S.CER | C1608 JB 1E 104K-T | B | 92.8/93.9 |
| C647 | 4030011600 | S.CER | C1608 JB 1E 104K-T | T | 94.3/67 |
| C648 | 4030011600 | S.CER | C1608 JB 1E 104K-T | B | 89.7/86 |
| C649 | 4030011600 | S.CER | C1608 JB 1E 104K-T | B | 85.4/67.5 |
| C650 | 4030011600 | S.CER | C1608 JB 1E 104K-T | B | 85.5/86.7 |
| C651 | 4030011600 | S.CER | C1608 JB 1E 104K-T | B | 85.4/74 |
| C652 | 4030011600 | S.CER | C1608 JB 1E 104K-T | B | 79.4/93.8 |
| C653 | 4030011600 | S.CER | C1608 JB 1E 104K-T | B | 82.5/86.8 |
| C654 | 4030011600 | S.CER | C1608 JB 1E 104K-T | T | 78.7/66.9 |
| C655 | 4030011600 | S.CER | C1608 JB 1E 104K-T | B | 81.9/79.9 |
| C656 | 4030011600 | S.CER | C1608 JB 1E 104K-T | B | 74.5/84.6 |

M.=Mounted side (T: Mounted on the Top side, B: Mounted on the Bottom side)
S.=Surface mount

## [SCOPE UNIT]

| REF NO. | PARTS NO. | DESCRIPTION | M. | H/V LOCATION |
|---|---|---|---|---|
| C657 | 4030011600 | S.CER C1608 JB 1E 104K-T | B | 74.5/80.3 |
| C658 | 4030011600 | S.CER C1608 JB 1E 104K-T | B | 74.6/71.4 |
| C659 | 4030011600 | S.CER C1608 JB 1E 104K-T | B | 74.5/88.1 |
| C660 | 4510008540 | S.ELE EEE1CA100SR | T | 67.6/75 |
| C661 | 4030011600 | S.CER C1608 JB 1E 104K-T | B | 72.8/74.7 |
| C662 | 4030011600 | S.CER C1608 JB 1E 104K-T | T | 88.3/95.9 |
| C663 | 4030011600 | S.CER C1608 JB 1E 104K-T | T | 68.8/70.3 |
| C664 | 4030011600 | S.CER C1608 JB 1E 104K-T | T | 66.2/67.6 |
| C665 | 4030011600 | S.CER C1608 JB 1E 104K-T | B | 67.5/76.8 |
| C666 | 4550007310 | S.TAN F930J227MNMBMA | B | 108.6/73.9 |
| C667 | 4550007310 | S.TAN F930J227MNMBMA | B | 108.6/68.6 |
| C671 | 4030011600 | S.CER C1608 JB 1E 104K-T | T | 114.2/70.1 |
| C672 | 4030006880 | S.CER C1608 JB 1H 472K-T | T | 72.9/64.4 |
| C701 | 4030011600 | S.CER C1608 JB 1E 104K-T | T | 76/57 |
| C702 | 4030011600 | S.CER C1608 JB 1E 104K-T | T | 72.7/53.6 |
| C703 | 4030011600 | S.CER C1608 JB 1E 104K-T | T | 74.6/57 |
| C720 | 4030006880 | S.CER C1608 JB 1H 472K-T | T | 82.9/38.1 |
| C721 | 4030011600 | S.CER C1608 JB 1E 104K-T | T | 83.2/40.2 |
| C722 | 4510008540 | S.ELE EEE1CA100SR | T | 82.6/44.1 |
| C723 | 4030006880 | S.CER C1608 JB 1H 472K-T | T | 109.9/37.4 |
| C724 | 4030011600 | S.CER C1608 JB 1E 104K-T | T | 109.9/38.9 |
| C725 | 4510008540 | S.ELE EEE1CA100SR | T | 110.1/33.2 |
| C726 | 4030006880 | S.CER C1608 JB 1H 472K-T | T | 108.6/45.9 |
| C727 | 4030006880 | S.CER C1608 JB 1H 472K-T | T | 105.6/45.3 |
| C730 | 4030011600 | S.CER C1608 JB 1E 104K-T | T | 84.2/35.3 |
| C731 | 4030011600 | S.CER C1608 JB 1E 104K-T | T | 84.2/38.1 |
| C733 | 4030011600 | S.CER C1608 JB 1E 104K-T | T | 93.4/26.3 |
| C734 | 4030011600 | S.CER C1608 JB 1E 104K-T | T | 103.1/29.9 |
| C736 | 4030011600 | S.CER C1608 JB 1E 104K-T | T | 96.8/44.8 |
| C737 | 4030011600 | S.CER C1608 JB 1E 104K-T | T | 103/40.9 |
| C738 | 4030011600 | S.CER C1608 JB 1E 104K-T | T | 96.5/26.3 |
| C739 | 4030011600 | S.CER C1608 JB 1E 104K-T | T | 99.6/26.3 |
| C740 | 4030011600 | S.CER C1608 JB 1E 104K-T | T | 103.1/37.4 |
| C741 | 4030011600 | S.CER C1608 JB 1E 104K-T | T | 92.6/45.1 |
| C742 | 4030011600 | S.CER C1608 JB 1E 104K-T | T | 90/45.1 |
| C750 | 4030006900 | S.CER C1608 JB 1H 103K-T | T | 103.2/34.5 |
| C751 | 4030006900 | S.CER C1608 JB 1H 103K-T | T | 105.1/37.3 |
| C760 | 4030006880 | S.CER C1608 JB 1H 472K-T | T | 110.9/20.8 |
| C761 | 4030007150 | S.CER C1608 CH 1H 151J-T | T | 110.1/22.8 |
| C762 | 4030007110 | S.CER C1608 CH 1H 680J-T | T | 108.4/21.6 |
| C763 | 4030011280 | S.CER C1608 CH 1H 271J-T | T | 106/25.1 |
| C764 | 4030007080 | S.CER C1608 CH 1H 390J-T | T | 103.4/20.8 |
| C765 | 4030011830 | S.CER C1608 CH 1H 301J-T | T | 100/24.3 |
| C766 | 4030007020 | S.CER C1608 CH 1H 120J-T | T | 100/21.7 |
| C767 | 4030007170 | S.CER C1608 CH 1H 221J-T | T | 95.7/24.3 |
| C768 | 4030011280 | S.CER C1608 CH 1H 271J-T | T | 93.5/20.4 |
| C769 | 4030006860 | S.CER C1608 JB 1H 102K-T | T | 91.4/21.3 |
| C770 | 4030011280 | S.CER C1608 CH 1H 271J-T | T | 89.3/20.5 |
| C801 | 4030006880 | S.CER C1608 JB 1H 472K-T | T | 66.2/40 |
| C802 | 4510008540 | S.ELE EEE1CA100SR | T | 69/44.8 |
| C803 | 4030006900 | S.CER C1608 JB 1H 103K-T | T | 60.4/37.1 |
| C805 | 4550007660 | S.TAN F931E105MAABMA | T | 58.5/38.7 |
| C806 | 4340000240 | S.MLR ECHU 1C 682JX5 | T | 64.2/43.3 |
| C807 | 4030006880 | S.CER C1608 JB 1H 472K-T | T | 69.6/33.3 |
| C808 | 4030006880 | S.CER C1608 JB 1H 472K-T | B | 62.7/32 |
| C809 | 4510008540 | S.ELE EEE1CA100SR | T | 64.9/25.7 |
| C810 | 4030006880 | S.CER C1608 JB 1H 472K-T | T | 73.8/42.8 |
| C811 | 4030006880 | S.CER C1608 JB 1H 472K-T | T | 73.3/32.9 |
| C812 | 4030006880 | S.CER C1608 JB 1H 472K-T | T | 73.8/30.9 |
| C813 | 4030011600 | S.CER C1608 JB 1E 104K-T | T | 65.9/31.8 |
| C821 | 4030007060 | S.CER C1608 CH 1H 270J-T | T | 57.8/46.5 |
| C822 | 4030007100 | S.CER C1608 CH 1H 560J-T | T | 54.4/45.7 |
| C823 | 4030006960 | S.CER C1608 CH 1H 050C-T | T | 55.7/45.7 |
| C824 | 4610001850 | S.TRI TZB4R200AB10R00 | T | 50.6/44.7 |
| C825 | 4030007130 | S.CER C1608 CH 1H 101J-T | T | 46.9/46.8 |
| C826 | 4030007060 | S.CER C1608 CH 1H 270J-T | T | 40.9/45.9 |
| C827 | 4030007020 | S.CER C1608 CH 1H 120J-T | T | 45.5/44.6 |
| C828 | 4030006880 | S.CER C1608 JB 1H 472K-T | T | 43.5/43.1 |
| C829 | 4030009500 | S.CER C1608 CH 1H 0R5B-T | T | 37.9/42.9 |
| C830 | 4030006860 | S.CER C1608 JB 1H 102K-T | T | 47.9/52.8 |
| C831 | 4030006880 | S.CER C1608 JB 1H 472K-T | T | 46.4/52.8 |
| C832 | 4510008500 | S.ELE EEE1CA101WP | T | 49.3/57.6 |
| C833 | 4510008540 | S.ELE EEE1CA100SR | T | 40.3/58 |
| C842 | 4030006880 | S.CER C1608 JB 1H 472K-T | T | 39.4/35 |
| C843 | 4030006860 | S.CER C1608 JB 1H 102K-T | T | 23.8/34.3 |
| C844 | 4030006880 | S.CER C1608 JB 1H 472K-T | T | 24.5/32.4 |
| C845 | 4510008520 | S.ELE EEE1CA470SP | T | 17.7/35.3 |
| C846 | 4030006880 | S.CER C1608 JB 1H 472K-T | T | 38.4/31.3 |
| C847 | 4030006880 | S.CER C1608 JB 1H 472K-T | T | 30.3/36.1 |
| C848 | 4030006880 | S.CER C1608 JB 1H 472K-T | T | 30.3/38.3 |
| C849 | 4030006880 | S.CER C1608 JB 1H 472K-T | T | 27/40 |
| C850 | 4030006880 | S.CER C1608 JB 1H 472K-T | T | 30.3/39.7 |
| C851 | 4030006880 | S.CER C1608 JB 1H 472K-T | T | 25.1/42.3 |
| C852 | 4030007120 | S.CER C1608 CH 1H 820J-T | T | 30/44.2 |
| C853 | 4030007070 | S.CER C1608 CH 1H 330J-T | T | 24.4/46.8 |
| C854 | 4030007140 | S.CER C1608 CH 1H 121J-T | T | 30/45.8 |
| C855 | 4030007020 | S.CER C1608 CH 1H 120J-T | T | 30.1/48.1 |
| C856 | 4030007090 | S.CER C1608 CH 1H 470J-T | T | 30.2/50.4 |
| C862 | 4030006880 | S.CER C1608 JB 1H 472K-T | T | 60.4/34.5 |
| C911 | 4030008680 | S.CER C2012 JF 1C 105Z-T | T | 92.4/112.7 |
| C912 | 4030008680 | S.CER C2012 JF 1C 105Z-T | T | 92.4/109 |
| C913 | 4030008680 | S.CER C2012 JF 1C 105Z-T | T | 92.4/105.5 |
| C914 | 4030008680 | S.CER C2012 JF 1C 105Z-T | T | 96.8/115.2 |
| C915 | 4030008680 | S.CER C2012 JF 1C 105Z-T | T | 101.5/114.1 |
| C916 | 4030011600 | S.CER C1608 JB 1E 104K-T | T | 108.7/116.4 |
| C917 | 4030011600 | S.CER C1608 JB 1E 104K-T | B | 108.2/115.9 |
| C918 | 4030011600 | S.CER C1608 JB 1E 104K-T | B | 91.3/112.6 |
| J1 | 6510007020 | CNR TMP-J01X-V6 | | |
| J2 | 6510007020 | CNR TMP-J01X-V6 | | |
| J3 | 6510007020 | CNR TMP-J01X-V6 | | |
| J4 | 6510020001 | S.CNR 52808-3071 (3090) | T | 127.9/41.5 |
| J11 | 6510007020 | CNR TMP-J01X-V6 | | |
| J901 | 6510023720 | CNR LGY6501-0600C | | |

## [SCOPE UNIT]

| REF NO. | PARTS NO. | DESCRIPTION | M. | H/V LOCATION |
|---|---|---|---|---|
| J902 | 6510023120 | CNR CD6109SA1J0 <CVI> | | |
| J903 | 6510024040 | CNR TM11R-5M2-88-LP | | |
| J904 | 6510024033 | CNR UBA-4R-D14T-4D(LF)(SN) | | |
| J905 | 6450001941 | CNR KEY-15S-2A3A (LF) (SN) | | |
| J906 | 6510019971 | S.CNR 52808-1071 | T | 129/97.7 |
| J907 | 6510020251 | S.CNR B9B-PH-SM4-TB (LF) (SN) | T | 50.7/105.2 |
| J908 | 6510022311 | S.CNR B5B-PH-SM4-TB (LF) (SN) | T | 88.7/110.1 |
| J909 | 6510003471 | CNR B11B-EH-S (LF) (SN) | | |
| J910 | 6510019421 | S.CNR B8B-ZR-SM4-TF (LF) (SN) | T | 109.6/104.7 |
| DS901 | 5040002930 | S.LED SML-512MW T86 | T | 57.1/115.2 |
| DS902 | 5040002930 | S.LED SML-512MW T86 | T | 46/115.1 |
| EP901 | 6910012350 | S.BEA MMZ1608Y 102BT | B | 131.1/119.6 |
| EP902 | 6910012350 | S.BEA MMZ1608Y 102BT | B | 122.5/122.7 |
| EP903 | 6910012350 | S.BEA MMZ1608Y 102BT | T | 81.3/114.1 |
| EP904 | 6910012350 | S.BEA MMZ1608Y 102BT | T | 82.6/114.1 |
| EP905 | 6910012350 | S.BEA MMZ1608Y 102BT | B | 79.7/113.7 |
| EP906 | 6910012350 | S.BEA MMZ1608Y 102BT | T | 81.9/110.1 |
| EP907 | 6910012350 | S.BEA MMZ1608Y 102BT | B | 83.8/111.5 |
| EP908 | 6910012350 | S.BEA MMZ1608Y 102BT | B | 85.1/111.5 |

M.=Mounted side (T: Mounted on the Top side, B: Mounted on the Bottom side)
S.=Surface mount

## [LOGIC UNIT]

| REF NO. | PARTS NO. | DESCRIPTION | M. | H/V LOCATION |
|---|---|---|---|---|
| IC1 | 1130014630 | S.IC MT48LC16M16A2P IT | B | 59.3/91.9 |
| IC2 | 1130014630 | S.IC MT48LC16M16A2P IT | T | 59.3/99 |
| IC51 | 1130011591 | S.IC IDT70V24L15PFG | B | 95.5/56 |
| IC52 | 1140009781 | S.IC XC9572XL-10TQG100C | B | 116.5/56 |
| IC53 | 1110005821 | S.IC R3112N281A-TR-F | T | 142.2/100.9 |
| IC54 | 1130007431 | S.IC TC7S14FU (TE85R,F) | T | 146.5/100.6 |
| IC55 | 1130008041 | S.IC TC7SH04FU (TE85L,JF) | T | 97.9/34.4 |
| IC56 | 1130010111 | S.IC TC7WH04FU (TE12L,F) | B | 35/25.1 |
| IC101 | 1130011010 | S.IC SN74CBTLV3257PWR <ACE> | T | 25.2/75.3 |
| IC102 | 1130006441 | S.IC TC7S08F (TE85R,F) | T | 62/39 |
| IC103 | 1140011561 | S.IC HD6417751RBP200V | T | 53.5/64.9 |
| IC104 | 1130008361 | S.IC TC7SHU04FU (TE85L,JF) | T | 8.1/60.8 |
| IC105 | 1130012241 | S.IC CY2292FXC (SX-2590J) | T | 12.6/69 |
| IC106 | 1130011110 | S.IC TC74VCX04FT (EL) | T | 10/77.1 |
| IC201 | 1130014630 | S.IC MT48LC16M16A2P IT | B | 128/77.3 |
| IC202 | 1130014630 | S.IC MT48LC16M16A2P IT | B | 128.1/95.5 |
| IC203 | 1140011571 | S.IC HD64404BTDV | T | 97.4/78.4 |
| IC204 | 1140011581 | S.IC ADV7123KSTZ50 | T | 207.1/29.6 |
| IC205 | 1130011941 | S.IC TC7SZ04F (TE85L,F) | T | 195.9/26.4 |
| IC206 | 1130012150 | S.IC SN74ACT04PWR | T | 196/19.9 |
| IC207 | 1130005721 | S.IC TC7W04F (TE12L,F) | B | 212.2/38.2 |
| IC208 | 1130014080 | S.IC BD6517F-E2 | B | 219.1/39.2 |
| IC209 | 1190001920 | S.IC AK5355-VT-E2 | B | 109.8/22.9 |
| IC210 | 1190001920 | S.IC AK5355-VT-E2 | B | 120.7/22.9 |
| IC211 | 1190001910 | S.IC AK4384-VT-E2 | B | 131.3/32.6 |
| IC212 | 1190001910 | S.IC AK4384-VT-E2 | B | 119.1/33.4 |
| IC401 | 1130010970 | S.IC PCI1410APGE | B | 23.5/48.5 |
| IC402 | 1130011960 | S.IC TPS2211AIDBR | B | 21.8/31.2 |
| IC403 | 1130009570 | S.IC BR93LC46F-WE2 | T | 24.2/67.3 |
| IC404 | 1130010990 | S.IC RTL8139C | B | 23/76.5 |
| IC601 | 1130008041 | S.IC TC7SH04FU (TE85L,JF) | B | 169.3/55.8 |
| IC602 | 1130008711 | S.IC TC7SET04FU (T5L,JF) | B | 169.3/53.3 |
| IC603 | 1110004770 | S.IC BU9480F-E2 | T | 176/57 |
| IC604 | 1140011590 | S.IC HD64F2377VFQ33V | B | 87/30.5 |
| IC605 | 1140009781 | S.IC XC9572XL-10TQG100C | B | 141/57 |
| IC607 | 1130006441 | S.IC TC7S08F (TE85R,F) | B | 59.6/22.6 |
| IC608 | 1130006441 | S.IC TC7S08F (TE85R,F) | B | 63.3/22.6 |
| IC609 | 1130005252 | S.IC TC74HC08AF (EL,F) | B | 60/29.8 |
| IC610 | 1130014800 | S.IC R1EX24064ATA00A | B | 54/37.4 |
| IC801 | 1180002020 | S.REG BA033FP-E2 | B | 144.2/112.5 |
| IC802 | 1180001541 | S.IC TA78L08F (TE12L,F) | T | 131.1/111.6 |
| IC821 | 1110002700 | S.IC NJM2904M-TE1-#FMZB | B | 16.9/105 |
| IC851 | 1110003870 | S.IC NJM2058M-TE1 | B | 186.3/56.1 |
| IC852 | 1110003870 | S.IC NJM2058M-TE1 | B | 135.5/12.6 |
| IC853 | 1110003870 | S.IC NJM2058M-TE1 | B | 114.5/10.1 |
| IC854 | 1130005721 | S.IC TC7W04F (TE12L,F) | B | 161.4/40.6 |
| | | | | |
| Q601 | 1530002060 | S.TR 2SC4081 T106 R | B | 173.3/53.3 |
| Q602 | 1510000510 | S.TR 2SA1576A T106R | B | 173.2/57.2 |
| Q802 | 1530002060 | S.TR 2SC4081 T106 R | T | 159.1/70.3 |
| Q803 | 1540000441 | S.TR 2SD1619T-TD-E | B | 160.1/70.9 |
| Q804 | 1540000441 | S.TR 2SD1619T-TD-E | B | 166.7/70.8 |
| Q805 | 1530002060 | S.TR 2SC4081 T106 R | T | 165.7/70.3 |
| Q806 | 1540000441 | S.TR 2SD1619T-TD-E | B | 173.3/70.8 |
| Q807 | 1530002060 | S.TR 2SC4081 T106 R | T | 172.3/70.3 |
| Q808 | 1590001330 | S.TR DTA114EUA T106 | B | 157.7/30.1 |
| Q809 | 1590001330 | S.TR DTA114EUA T106 | B | 157.7/27.5 |
| Q810 | 1540000550 | S.TR 2SD1664 T100Q | T | 160.2/78 |
| Q821 | 1520000651 | S.TR 2SB1201S-TL-E | B | 28.9/108.4 |
| Q822 | 1530002060 | S.TR 2SC4081 T106 R | B | 25.5/103.6 |
| Q901 | 1590001960 | S.TR XP4311 (TX) | B | 187.9/88.3 |
| Q902 | 1590001960 | S.TR XP4311 (TX) | B | 188.9/79.7 |
| Q903 | 1590001960 | S.TR XP4311 (TX) | B | 193.9/88.3 |
| Q904 | 1590001960 | S.TR XP4311 (TX) | B | 192.9/79.7 |
| | | | | |
| D51 | 1750000550 | S.DIO 1SS355 TE-17 | T | 126.1/48.7 |
| D52 | 1750000550 | S.DIO 1SS355 TE-17 | T | 126.1/50.5 |
| D53 | 1750000550 | S.DIO 1SS355 TE-17 | T | 126.1/52.3 |
| D54 | 1750000550 | S.DIO 1SS355 TE-17 | T | 126.1/54.1 |
| D55 | 1750000550 | S.DIO 1SS355 TE-17 | T | 124.7/55.9 |
| D56 | 1750000550 | S.DIO 1SS355 TE-17 | T | 124.7/57.7 |
| D57 | 1750000550 | S.DIO 1SS355 TE-17 | T | 124.7/59.5 |
| D58 | 1750000550 | S.DIO 1SS355 TE-17 | T | 124.7/61.3 |
| D59 | 1750000550 | S.DIO 1SS355 TE-17 | T | 124.7/63.1 |
| D60 | 1750000550 | S.DIO 1SS355 TE-17 | T | 130.1/48.7 |
| D61 | 1750000550 | S.DIO 1SS355 TE-17 | T | 130.1/50.5 |
| D62 | 1750000550 | S.DIO 1SS355 TE-17 | T | 130.1/52.3 |
| D65 | 1750000550 | S.DIO 1SS355 TE-17 | T | 128.9/57.7 |
| D66 | 1750000550 | S.DIO 1SS355 TE-17 | T | 128.9/59.5 |
| D67 | 1750000550 | S.DIO 1SS355 TE-17 | T | 128.9/61.3 |
| D68 | 1750000550 | S.DIO 1SS355 TE-17 | T | 128.9/63.1 |
| D201 | 1790000980 | S.DIO MA3J7420GL (TX) | B | 214.6/32.4 |
| D202 | 1790000980 | S.DIO MA3J7420GL (TX) | B | 214.6/29.4 |
| D203 | 1790000980 | S.DIO MA3J7420GL (TX) | B | 214.6/26.4 |
| D204 | 1790000980 | S.DIO MA3J7420GL (TX) | T | 201.5/16.9 |
| D205 | 1790000980 | S.DIO MA3J7420GL (TX) | T | 201.5/19.8 |
| D206 | 1790000980 | S.DIO MA3J7420GL (TX) | B | 218/7.4 |
| D207 | 1790000980 | S.DIO MA3J7420GL (TX) | B | 220.9/7.4 |
| D208 | 1790000980 | S.DIO MA3J7420GL (TX) | B | 228/7.4 |
| D209 | 1790000980 | S.DIO MA3J7420GL (TX) | B | 230.8/7.4 |
| D601 | 1750000550 | S.DIO 1SS355 TE-17 | B | 175.5/52.5 |
| D801 | 1750000370 | S.DIO DA221 TL | B | 159.1/66.5 |
| D802 | 1750000370 | S.DIO DA221 TL | B | 165.7/66.5 |
| D803 | 1750000370 | S.DIO DA221 TL | B | 172.3/66.5 |
| D804 | 1750000271 | S.DIO 1SS301 (TE85L,F) | B | 170/64.1 |
| D805 | 1790001611 | S.DIO 1SS385 (TE85L,F) | B | 157.3/38.2 |
| D806 | 1790001611 | S.DIO 1SS385 (TE85L,F) | B | 157.3/40.3 |
| D821 | 1730002340 | S.ZEN MA8047-M (TX) | B | 22.4/104.6 |
| D851 | 1750000550 | S.DIO 1SS355 TE-17 | B | 180.9/50.2 |
| D852 | 1750000550 | S.DIO 1SS355 TE-17 | B | 191.8/50 |
| D853 | 1790000980 | S.DIO MA3J7420GL (TX) | B | 122/18.5 |
| D854 | 1790000980 | S.DIO MA3J7420GL (TX) | B | 119.5/18.5 |
| D855 | 1790000980 | S.DIO MA3J7420GL (TX) | B | 107/18.4 |

## [LOGIC UNIT]

| REF NO. | PARTS NO. | DESCRIPTION | M. | H/V LOCATION |
|---|---|---|---|---|
| D856 | 1790000980 | S.DIO MA3J7420GL (TX) | B | 104.5/18.4 |
| D857 | 1750000550 | S.DIO 1SS355 TE-17 | B | 189.9/61.9 |
| D858 | 1750000550 | S.DIO 1SS355 TE-17 | B | 182.2/61.9 |
| D860 | 1790000980 | S.DIO MA3J7420GL (TX) | T | 97.5/26.3 |
| D861 | 1790000980 | S.DIO MA3J7420GL (TX) | T | 97.5/31.3 |
| D862 | 1790000980 | S.DIO MA3J7420GL (TX) | T | 97.9/23.7 |
| D863 | 1790000980 | S.DIO MA3J7420GL (TX) | T | 97.5/28.8 |
| D864 | 1790000980 | S.DIO MA3J7420GL (TX) | T | 100.4/23.7 |
| D865 | 1790000980 | S.DIO MA3J7420GL (TX) | T | 94.3/24.7 |
| D866 | 1790000980 | S.DIO MA3J7420GL (TX) | T | 94.3/27.2 |
| D867 | 1790000980 | S.DIO MA3J7420GL (TX) | T | 102.9/23.7 |
| D901 | 1790000980 | S.DIO MA3J7420GL (TX) | T | 188/31.2 |
| | | | | |
| X101 | 6050011610 | S.XTL CR-751 (25.000 MHz) | T | 2.9/63.1 |
| X201 | 6050010680 | S.XTL CR-628 (24.576 MHz) | T | 103.9/94.6 |
| X202 | 6050011910 | S.XTL CR-780 (48 MHz) | T | 100.2/60.6 |
| X601 | 6050011810 | S.XTL CR-755 (15.9744 MHz) | T | 81.9/13.6 |
| | | | | |
| L203 | 6200002631 | S.COL NLV25T-R10J | B | 222.2/32.6 |
| L204 | 6200002631 | S.COL NLV25T-R10J | B | 222.2/29.6 |
| L205 | 6200002631 | S.COL NLV25T-R10J | B | 222.2/26.6 |
| L801 | 6200003261 | S.COL NLV32T-101J | B | 66.9/123.5 |
| L803 | 6180003321 | S.COL SLF6028T-150M1R0-PF | B | 88.7/112.9 |
| L804 | 6180003321 | S.COL SLF6028T-150M1R0-PF | B | 102.5/112.9 |
| L805 | 6180003321 | S.COL SLF6028T-150M1R0-PF | B | 95.8/112.9 |
| L806 | 6180003321 | S.COL SLF6028T-150M1R0-PF | B | 109/112.9 |
| L807 | 6180003321 | S.COL SLF6028T-150M1R0-PF | B | 115.7/112.9 |
| L808 | 6200003590 | S.COL EXCCL3225U1 | T | 92.1/115.8 |
| L809 | 6200003590 | S.COL EXCCL3225U1 | B | 93.1/123.1 |
| L810 | 6200003590 | S.COL EXCCL3225U1 | B | 87.7/123.2 |
| L811 | 6200001831 | S.COL NLV32T-100J | B | 127.9/22.6 |
| L821 | 6200003590 | S.COL EXCCL3225U1 | B | 121.2/112.7 |
| L822 | 6200003590 | S.COL EXCCL3225U1 | T | 125/115.8 |
| L823 | 6200009790 | S.COL BLM31PG121SN1 | T | 18.2/25.6 |
| L824 | 6200003590 | S.COL EXCCL3225U1 | B | 130.1/115.5 |
| L825 | 6200003590 | S.COL EXCCL3225U1 | B | 133.6/116.1 |
| L826 | 6180003321 | S.COL SLF6028T-150M1R0-PF | B | 179.9/15.5 |
| L827 | 6200003590 | S.COL EXCCL3225U1 | T | 120.4/115.8 |
| L832 | 6200003590 | S.COL EXCCL3225U1 | B | 80.1/122.1 |
| L833 | 6200003590 | S.COL EXCCL3225U1 | B | 75.6/122.1 |
| L834 | 6200003590 | S.COL EXCCL3225U1 | B | 125.6/112.2 |
| L835 | 6200003590 | S.COL EXCCL3225U1 | B | 125.6/115.3 |
| L901 | 6200003590 | S.COL EXCCL3225U1 | B | 214.4/74.4 |
| L902 | 6200003590 | S.COL EXCCL3225U1 | B | 214.4/78.2 |
| L903 | 6200003590 | S.COL EXCCL3225U1 | B | 206.5/80 |
| L904 | 6200003590 | S.COL EXCCL3225U1 | B | 214.4/81.2 |
| L905 | 6200003590 | S.COL EXCCL3225U1 | B | 21/114.8 |
| L906 | 6200003590 | S.COL EXCCL3225U1 | B | 24/114.8 |
| L907 | 6200003590 | S.COL EXCCL3225U1 | B | 27/114.8 |
| L908 | 6200003590 | S.COL EXCCL3225U1 | B | 30/114.8 |
| L909 | 6200003261 | S.COL NLV32T-101J | B | 181.3/82.6 |
| L910 | 6200003590 | S.COL EXCCL3225U1 | B | 195.7/82.4 |
| L911 | 6200003590 | S.COL EXCCL3225U1 | B | 221.8/76.5 |
| L912 | 6200003590 | S.COL EXCCL3225U1 | B | 230.4/76.8 |
| L913 | 6200003590 | S.COL EXCCL3225U1 | B | 230.4/63 |
| L914 | 6200003590 | S.COL EXCCL3225U1 | B | 221.8/64 |
| L915 | 6200003590 | S.COL EXCCL3225U1 | B | 230.4/66 |
| L916 | 6200003590 | S.COL EXCCL3225U1 | B | 221.8/67 |
| L917 | 6200003590 | S.COL EXCCL3225U1 | T | 162.2/21.7 |
| L918 | 6200003590 | S.COL EXCCL3225U1 | T | 186.4/18.7 |
| L919 | 6200003590 | S.COL EXCCL3225U1 | T | 186.4/22.4 |
| L920 | 6200003590 | S.COL EXCCL3225U1 | T | 162.3/24.7 |
| L1101 | 6200003590 | S.COL EXCCL3225U1 | T | 40.5/25.8 |
| | | | | |
| R1 | 7030003520 | S.RES ERJ3GEYJ 472 V (4.7 K) | T | 91.5/101.3 |
| R51 | 7030003520 | S.RES ERJ3GEYJ 472 V (4.7 K) | T | 143/76.8 |
| R52 | 7030003560 | S.RES ERJ3GEYJ 103 V (10 K) | T | 138.6/100.6 |
| R55 | 7030003440 | S.RES ERJ3GEYJ 102 V (1 K) | B | 126.4/51.5 |
| R56 | 7030003440 | S.RES ERJ3GEYJ 102 V (1 K) | B | 123.5/46.1 |
| R57 | 7030003680 | S.RES ERJ3GEYJ 104 V (100 K) | B | 31.3/25 |
| R58 | 7030003680 | S.RES ERJ3GEYJ 104 V (100 K) | B | 30/25 |
| R101 | 7030003680 | S.RES ERJ3GEYJ 104 V (100 K) | T | 19.3/74.8 |
| R102 | 7030003520 | S.RES ERJ3GEYJ 472 V (4.7 K) | T | 31/73.7 |
| R103 | 7030003520 | S.RES ERJ3GEYJ 472 V (4.7 K) | T | 31/75.7 |
| R104 | 7030003520 | S.RES ERJ3GEYJ 472 V (4.7 K) | T | 19.3/73.5 |
| R105 | 7030003520 | S.RES ERJ3GEYJ 472 V (4.7 K) | T | 19.3/76.1 |
| R106 | 7030003560 | S.RES ERJ3GEYJ 103 V (10 K) | B | 54.6/60.1 |
| R107 | 7030003560 | S.RES ERJ3GEYJ 103 V (10 K) | B | 49.4/60.1 |
| R108 | 7030003560 | S.RES ERJ3GEYJ 103 V (10 K) | B | 48.4/49.5 |
| R109 | 7030003560 | S.RES ERJ3GEYJ 103 V (10 K) | B | 52/60.1 |
| R110 | 7030003560 | S.RES ERJ3GEYJ 103 V (10 K) | T | 54.9/49.3 |
| R111 | 7030003560 | S.RES ERJ3GEYJ 103 V (10 K) | B | 54.6/58.8 |
| R112 | 7030003560 | S.RES ERJ3GEYJ 103 V (10 K) | T | 53.6/49.3 |
| R113 | 7030003560 | S.RES ERJ3GEYJ 103 V (10 K) | B | 49.4/58.8 |
| R114 | 7030003560 | S.RES ERJ3GEYJ 103 V (10 K) | B | 45.8/49.5 |
| R115 | 7030003560 | S.RES ERJ3GEYJ 103 V (10 K) | B | 49.4/62.7 |
| R116 | 7030003560 | S.RES ERJ3GEYJ 103 V (10 K) | B | 49.4/61.4 |
| R117 | 7030003260 | S.RES ERJ3GEYJ 330 V (33) | B | 43.2/49.5 |
| R118 | 7030003560 | S.RES ERJ3GEYJ 103 V (10 K) | B | 49.4/64 |
| R119 | 7030003560 | S.RES ERJ3GEYJ 103 V (10 K) | B | 41.4/50 |
| R120 | 7030003560 | S.RES ERJ3GEYJ 103 V (10 K) | B | 49.4/65.3 |
| R121 | 7030003560 | S.RES ERJ3GEYJ 103 V (10 K) | B | 43.2/46.9 |
| R122 | 7030003560 | S.RES ERJ3GEYJ 103 V (10 K) | B | 39.3/56 |
| R123 | 7030003560 | S.RES ERJ3GEYJ 103 V (10 K) | B | 43.2/45.6 |
| R124 | 7030003680 | S.RES ERJ3GEYJ 104 V (100 K) | T | 51/49.3 |
| R125 | 7030003520 | S.RES ERJ3GEYJ 472 V (4.7 K) | T | 52.3/49.3 |
| R126 | 7030003560 | S.RES ERJ3GEYJ 103 V (10 K) | B | 52/61.4 |
| R127 | 7030003560 | S.RES ERJ3GEYJ 103 V (10 K) | B | 52/58.8 |
| R128 | 7030003560 | S.RES ERJ3GEYJ 103 V (10 K) | T | 53.6/45.7 |
| R129 | 7030003560 | S.RES ERJ3GEYJ 103 V (10 K) | T | 54.9/46.7 |
| R130 | 7030003560 | S.RES ERJ3GEYJ 103 V (10 K) | B | 56.4/50.5 |
| R131 | 7030003560 | S.RES ERJ3GEYJ 103 V (10 K) | B | 54.6/61.4 |

M.=Mounted side (T: Mounted on the Top side, B: Mounted on the Bottom side)
S.=Surface mount

## [LOGIC UNIT]

| REF NO. | PARTS NO. | DESCRIPTION | M. | H/V LOCATION |
|---|---|---|---|---|
| R132 | 7030003560 | S.RES ERJ3GEYJ 103 V (10 K) | T | 56.2/49.3 |
| R133 | 7030003560 | S.RES ERJ3GEYJ 103 V (10 K) | T | 56.2/46.7 |
| R134 | 7030003200 | S.RES ERJ3GEYJ 100 V (10) | B | 57.2/58.8 |
| R135 | 7030003200 | S.RES ERJ3GEYJ 100 V (10) | B | 57.2/60.1 |
| R136 | 7030003200 | S.RES ERJ3GEYJ 100 V (10) | B | 70.1/50.5 |
| R137 | 7030004050 | S.RES ERJ3GEYJ 1R0 V (1) | B | 49.4/68 |
| R138 | 7030003560 | S.RES ERJ3GEYJ 103 V (10 K) | B | 49.4/69.3 |
| R139 | 7030003560 | S.RES ERJ3GEYJ 103 V (10 K) | B | 49.7/78 |
| R140 | 7410000990 | S.ARY EXB-V8V 470JV (47) | T | 47/82.7 |
| R141 | 7410000990 | S.ARY EXB-V8V 470JV (47) | T | 43.3/82.7 |
| R142 | 7410000990 | S.ARY EXB-V8V 470JV (47) | T | 54.4/82.7 |
| R143 | 7410000990 | S.ARY EXB-V8V 470JV (47) | T | 61.8/82.7 |
| R144 | 7410000990 | S.ARY EXB-V8V 470JV (47) | T | 50.7/82.7 |
| R145 | 7410000990 | S.ARY EXB-V8V 470JV (47) | T | 58.1/82.7 |
| R146 | 7030003280 | S.RES ERJ3GEYJ 470 V (47) | T | 70/81.8 |
| R147 | 7030003280 | S.RES ERJ3GEYJ 470 V (47) | T | 70/80.5 |
| R148 | 7410000990 | S.ARY EXB-V8V 470JV (47) | T | 65.5/82.7 |
| R149 | 7410000990 | S.ARY EXB-V8V 470JV (47) | T | 70/54.9 |
| R150 | 7410000990 | S.ARY EXB-V8V 470JV (47) | T | 70/58.6 |
| R151 | 7410000990 | S.ARY EXB-V8V 470JV (47) | T | 70/62.3 |
| R152 | 7410000990 | S.ARY EXB-V8V 470JV (47) | T | 70/66 |
| R153 | 7030003200 | S.RES ERJ3GEYJ 100 V (10) | T | 70/83.1 |
| R154 | 7410000990 | S.ARY EXB-V8V 470JV (47) | T | 70/69.7 |
| R155 | 7410000990 | S.ARY EXB-V8V 470JV (47) | T | 70/73.4 |
| R156 | 7410000990 | S.ARY EXB-V8V 470JV (47) | T | 70/78 |
| R157 | 7410000800 | S.ARY EXB-V8V 103JV (10 K) | T | 77.4/38.7 |
| R158 | 7030003560 | S.RES ERJ3GEYJ 103 V (10 K) | T | 77.4/36.2 |
| R159 | 7030003560 | S.RES ERJ3GEYJ 103 V (10 K) | T | 64.3/41.3 |
| R161 | 7030003250 | S.RES ERJ3GEYJ 270 V (27) | T | 9.1/64.6 |
| R162 | 7030003800 | S.RES ERJ3GEYJ 105 V (1 M) | T | 6.2/59.5 |
| R163 | 7030003320 | S.RES ERJ3GEYJ 101 V (100) | T | 12.5/73.7 |
| R164 | 7030003250 | S.RES ERJ3GEYJ 270 V (27) | B | 10.8/68.3 |
| R165 | 7030003860 | S.RES ERJ3GE JPW V | T | 4.3/76.8 |
| R166 | 7030003860 | S.RES ERJ3GE JPW V | T | 8.5/81.2 |
| R167 | 7030003860 | S.RES ERJ3GE JPW V | T | 14.9/78.1 |
| R170 | 7030003600 | S.RES ERJ3GEYJ 223 V (22 K) | B | 38.5/38.6 |
| R171 | 7030003600 | S.RES ERJ3GEYJ 223 V (22 K) | B | 35.3/75.2 |
| R172 | 7030003600 | S.RES ERJ3GEYJ 223 V (22 K) | B | 35.3/76.5 |
| R173 | 7030003600 | S.RES ERJ3GEYJ 223 V (22 K) | B | 39.4/78.2 |
| R174 | 7030003600 | S.RES ERJ3GEYJ 223 V (22 K) | B | 37.4/79 |
| R175 | 7030003600 | S.RES ERJ3GEYJ 223 V (22 K) | B | 37.4/80.3 |
| R176 | 7030003600 | S.RES ERJ3GEYJ 223 V (22 K) | B | 35.3/73.9 |
| R201 | 7030003560 | S.RES ERJ3GEYJ 103 V (10 K) | T | 114.5/85.1 |
| R202 | 7030003560 | S.RES ERJ3GEYJ 103 V (10 K) | T | 111.3/85.1 |
| R203 | 7030003560 | S.RES ERJ3GEYJ 103 V (10 K) | T | 118.4/86.4 |
| R204 | 7030003560 | S.RES ERJ3GEYJ 103 V (10 K) | T | 118.4/85.1 |
| R205 | 7030003560 | S.RES ERJ3GEYJ 103 V (10 K) | T | 114.5/82.5 |
| R206 | 7030003560 | S.RES ERJ3GEYJ 103 V (10 K) | T | 111.3/83.8 |
| R207 | 7030003560 | S.RES ERJ3GEYJ 103 V (10 K) | T | 118.4/83.8 |
| R208 | 7030003560 | S.RES ERJ3GEYJ 103 V (10 K) | T | 118.4/82.5 |
| R209 | 7030003560 | S.RES ERJ3GEYJ 103 V (10 K) | T | 114.5/83.8 |
| R212 | 7030003640 | S.RES ERJ3GEYJ 473 V (47 K) | T | 83.7/82 |
| R213 | 7030003640 | S.RES ERJ3GEYJ 473 V (47 K) | T | 83.7/83.3 |
| R218 | 7030003520 | S.RES ERJ3GEYJ 472 V (4.7 K) | T | 116.9/49 |
| R219 | 7030003520 | S.RES ERJ3GEYJ 472 V (4.7 K) | T | 83.7/79.4 |
| R220 | 7030003520 | S.RES ERJ3GEYJ 472 V (4.7 K) | B | 94.1/74.4 |
| R221 | 7030003560 | S.RES ERJ3GEYJ 103 V (10 K) | T | 83.7/73.7 |
| R225 | 7030003560 | S.RES ERJ3GEYJ 103 V (10 K) | B | 94.1/79.6 |
| R226 | 7030003560 | S.RES ERJ3GEYJ 103 V (10 K) | B | 94.1/80.9 |
| R227 | 7030003560 | S.RES ERJ3GEYJ 103 V (10 K) | T | 92/98.2 |
| R228 | 7030003560 | S.RES ERJ3GEYJ 103 V (10 K) | T | 92/95.1 |
| R229 | 7030003560 | S.RES ERJ3GEYJ 103 V (10 K) | T | 91.2/92 |
| R230 | 7030003560 | S.RES ERJ3GEYJ 103 V (10 K) | T | 93.3/95.1 |
| R231 | 7030003560 | S.RES ERJ3GEYJ 103 V (10 K) | T | 92.5/92.2 |
| R232 | 7030003560 | S.RES ERJ3GEYJ 103 V (10 K) | B | 93.4/83.2 |
| R233 | 7030003560 | S.RES ERJ3GEYJ 103 V (10 K) | T | 93.3/98.2 |
| R234 | 7030003560 | S.RES ERJ3GEYJ 103 V (10 K) | T | 93.8/92.2 |
| R235 | 7030003560 | S.RES ERJ3GEYJ 103 V (10 K) | T | 94.6/95.1 |
| R236 | 7030003560 | S.RES ERJ3GEYJ 103 V (10 K) | T | 94.6/98.2 |
| R237 | 7030003560 | S.RES ERJ3GEYJ 103 V (10 K) | B | 94.7/83.2 |
| R238 | 7030003560 | S.RES ERJ3GEYJ 103 V (10 K) | T | 95.1/92.2 |
| R239 | 7030003560 | S.RES ERJ3GEYJ 103 V (10 K) | T | 95.9/95.1 |
| R240 | 7030003560 | S.RES ERJ3GEYJ 103 V (10 K) | T | 95.9/98.2 |
| R241 | 7030003560 | S.RES ERJ3GEYJ 103 V (10 K) | B | 97/89.4 |
| R242 | 7030003560 | S.RES ERJ3GEYJ 103 V (10 K) | T | 96.6/92 |
| R243 | 7030003560 | S.RES ERJ3GEYJ 103 V (10 K) | B | 96/83.2 |
| R244 | 7030003560 | S.RES ERJ3GEYJ 103 V (10 K) | T | 96.6/64.7 |
| R245 | 7030003560 | S.RES ERJ3GEYJ 103 V (10 K) | T | 90.1/64.7 |
| R246 | 7030003560 | S.RES ERJ3GEYJ 103 V (10 K) | T | 88.8/61.6 |
| R247 | 7030003560 | S.RES ERJ3GEYJ 103 V (10 K) | B | 96.7/74.4 |
| R248 | 7030003560 | S.RES ERJ3GEYJ 103 V (10 K) | T | 91.4/64.7 |
| R249 | 7030003560 | S.RES ERJ3GEYJ 103 V (10 K) | T | 86.2/64.7 |
| R250 | 7030003560 | S.RES ERJ3GEYJ 103 V (10 K) | T | 87.5/64.7 |
| R251 | 7030003560 | S.RES ERJ3GEYJ 103 V (10 K) | T | 90.1/61.6 |
| R252 | 7030003560 | S.RES ERJ3GEYJ 103 V (10 K) | T | 87.5/61.6 |
| R253 | 7030003560 | S.RES ERJ3GEYJ 103 V (10 K) | T | 83.7/75 |
| R254 | 7030003560 | S.RES ERJ3GEYJ 103 V (10 K) | T | 88.8/64.7 |
| R255 | 7030003560 | S.RES ERJ3GEYJ 103 V (10 K) | T | 86.2/61.6 |
| R256 | 7030003560 | S.RES ERJ3GEYJ 103 V (10 K) | B | 96.7/77 |
| R257 | 7030003560 | S.RES ERJ3GEYJ 103 V (10 K) | T | 92.7/64.7 |
| R258 | 7030003560 | S.RES ERJ3GEYJ 103 V (10 K) | B | 96.7/78.3 |
| R259 | 7030003560 | S.RES ERJ3GEYJ 103 V (10 K) | T | 92.7/61.6 |
| R260 | 7030003560 | S.RES ERJ3GEYJ 103 V (10 K) | B | 96.7/79.6 |
| R261 | 7030003560 | S.RES ERJ3GEYJ 103 V (10 K) | T | 94/61.6 |
| R262 | 7030003560 | S.RES ERJ3GEYJ 103 V (10 K) | B | 96.7/80.9 |
| R263 | 7030003560 | S.RES ERJ3GEYJ 103 V (10 K) | B | 94/66.6 |
| R264 | 7030003560 | S.RES ERJ3GEYJ 103 V (10 K) | B | 98/72.6 |
| R265 | 7030003560 | S.RES ERJ3GEYJ 103 V (10 K) | T | 92.7/59 |
| R266 | 7030003560 | S.RES ERJ3GEYJ 103 V (10 K) | T | 94/59 |
| R267 | 7030003560 | S.RES ERJ3GEYJ 103 V (10 K) | T | 95.3/64.7 |
| R268 | 7030003560 | S.RES ERJ3GEYJ 103 V (10 K) | B | 91.4/66.6 |
| R269 | 7030003560 | S.RES ERJ3GEYJ 103 V (10 K) | T | 94/64.7 |
| R270 | 7030003560 | S.RES ERJ3GEYJ 103 V (10 K) | T | 91.4/61.6 |
| R271 | 7030003560 | S.RES ERJ3GEYJ 103 V (10 K) | T | 91.4/59 |
| R272 | 7030003560 | S.RES ERJ3GEYJ 103 V (10 K) | B | 114.7/71.1 |

## [LOGIC UNIT]

| REF NO. | PARTS NO. | DESCRIPTION | M. | H/V LOCATION |
|---|---|---|---|---|
| R273 | 7030003560 | S.RES ERJ3GEYJ 103 V (10 K) | T | 114/68.2 |
| R274 | 7030003560 | S.RES ERJ3GEYJ 103 V (10 K) | B | 99.9/79.7 |
| R275 | 7030003560 | S.RES ERJ3GEYJ 103 V (10 K) | T | 111/69.5 |
| R276 | 7030003560 | S.RES ERJ3GEYJ 103 V (10 K) | T | 108.7/64.8 |
| R277 | 7030003560 | S.RES ERJ3GEYJ 103 V (10 K) | T | 114/66.9 |
| R278 | 7030003560 | S.RES ERJ3GEYJ 103 V (10 K) | T | 114/65.6 |
| R279 | 7030003560 | S.RES ERJ3GEYJ 103 V (10 K) | B | 99.9/81 |
| R280 | 7030003560 | S.RES ERJ3GEYJ 103 V (10 K) | T | 114/69.5 |
| R281 | 7030003560 | S.RES ERJ3GEYJ 103 V (10 K) | B | 100.6/75.2 |
| R282 | 7030003560 | S.RES ERJ3GEYJ 103 V (10 K) | B | 99.3/75.2 |
| R283 | 7030003560 | S.RES ERJ3GEYJ 103 V (10 K) | B | 105.6/65.2 |
| R284 | 7030003560 | S.RES ERJ3GEYJ 103 V (10 K) | B | 105.6/66.5 |
| R285 | 7030003560 | S.RES ERJ3GEYJ 103 V (10 K) | B | 99.9/78.4 |
| R286 | 7030003560 | S.RES ERJ3GEYJ 103 V (10 K) | T | 114/64.3 |
| R287 | 7030003560 | S.RES ERJ3GEYJ 103 V (10 K) | T | 103.5/65.6 |
| R288 | 7030003560 | S.RES ERJ3GEYJ 103 V (10 K) | T | 108.7/63.4 |
| R289 | 7030003560 | S.RES ERJ3GEYJ 103 V (10 K) | T | 100.9/65.5 |
| R290 | 7030003560 | S.RES ERJ3GEYJ 103 V (10 K) | B | 99.9/77 |
| R291 | 7030003560 | S.RES ERJ3GEYJ 103 V (10 K) | T | 106.1/65.5 |
| R292 | 7030003560 | S.RES ERJ3GEYJ 103 V (10 K) | B | 94.1/75.7 |
| R293 | 7030003560 | S.RES ERJ3GEYJ 103 V (10 K) | B | 94.1/77 |
| R294 | 7030003560 | S.RES ERJ3GEYJ 103 V (10 K) | B | 94.1/78.3 |
| R295 | 7030003640 | S.RES ERJ3GEYJ 473 V (47 K) | B | 96.7/75.7 |
| R296 | 7030003560 | S.RES ERJ3GEYJ 103 V (10 K) | T | 111.3/87.7 |
| R297 | 7030003560 | S.RES ERJ3GEYJ 103 V (10 K) | T | 111.3/91.6 |
| R298 | 7030003560 | S.RES ERJ3GEYJ 103 V (10 K) | T | 118.4/91.6 |
| R299 | 7030003560 | S.RES ERJ3GEYJ 103 V (10 K) | T | 111.3/90.3 |
| R300 | 7030003560 | S.RES ERJ3GEYJ 103 V (10 K) | T | 114.5/90.3 |
| R301 | 7030003560 | S.RES ERJ3GEYJ 103 V (10 K) | T | 118.4/90.3 |
| R302 | 7030003560 | S.RES ERJ3GEYJ 103 V (10 K) | T | 114.5/91.6 |
| R303 | 7030003560 | S.RES ERJ3GEYJ 103 V (10 K) | T | 118.4/89 |
| R304 | 7030003560 | S.RES ERJ3GEYJ 103 V (10 K) | T | 114.5/89 |
| R305 | 7030003560 | S.RES ERJ3GEYJ 103 V (10 K) | T | 111.3/89 |
| R306 | 7030003560 | S.RES ERJ3GEYJ 103 V (10 K) | T | 111.3/86.4 |
| R307 | 7030003560 | S.RES ERJ3GEYJ 103 V (10 K) | T | 114.5/86.4 |
| R308 | 7030003560 | S.RES ERJ3GEYJ 103 V (10 K) | T | 118.4/87.7 |
| R309 | 7030003560 | S.RES ERJ3GEYJ 103 V (10 K) | T | 114.5/87.7 |
| R310 | 7030003560 | S.RES ERJ3GEYJ 103 V (10 K) | T | 111/68.2 |
| R311 | 7030003560 | S.RES ERJ3GEYJ 103 V (10 K) | B | 116.1/71.1 |
| R313 | 7030003410 | S.RES ERJ3GEYJ 561 V (560) | T | 209.8/36.7 |
| R314 | 7030003340 | S.RES ERJ3GEYJ 151 V (150) | B | 216.8/32.5 |
| R315 | 7030003340 | S.RES ERJ3GEYJ 151 V (150) | B | 218.1/32.5 |
| R316 | 7030003340 | S.RES ERJ3GEYJ 151 V (150) | B | 216.8/29.5 |
| R317 | 7030003340 | S.RES ERJ3GEYJ 151 V (150) | B | 218.1/29.5 |
| R318 | 7030003340 | S.RES ERJ3GEYJ 151 V (150) | B | 216.8/26.5 |
| R319 | 7030003340 | S.RES ERJ3GEYJ 151 V (150) | B | 218.1/26.5 |
| R320 | 7030003240 | S.RES ERJ3GEYJ 220 V (22) | T | 203.9/17.8 |
| R321 | 7030003240 | S.RES ERJ3GEYJ 220 V (22) | T | 203.9/20.7 |
| R322 | 7030003250 | S.RES ERJ3GEYJ 270 V (27) | B | 213.9/7.4 |
| R323 | 7030003250 | S.RES ERJ3GEYJ 270 V (27) | B | 215.9/3.3 |
| R324 | 7030003580 | S.RES ERJ3GEYJ 153 V (15 K) | B | 213.9/6.1 |
| R325 | 7030003580 | S.RES ERJ3GEYJ 153 V (15 K) | B | 215.9/4.6 |
| R326 | 7030003250 | S.RES ERJ3GEYJ 270 V (27) | B | 227.4/4.9 |
| R327 | 7030003250 | S.RES ERJ3GEYJ 270 V (27) | B | 230/4.9 |
| R328 | 7030003580 | S.RES ERJ3GEYJ 153 V (15 K) | B | 228.1/3.1 |
| R329 | 7030003580 | S.RES ERJ3GEYJ 153 V (15 K) | B | 230.7/3.1 |
| R330 | 7030003560 | S.RES ERJ3GEYJ 103 V (10 K) | B | 222.6/38.8 |
| R331 | 7030003560 | S.RES ERJ3GEYJ 103 V (10 K) | B | 223.9/38.8 |
| R332 | 7030003640 | S.RES ERJ3GEYJ 473 V (47 K) | B | 104.6/25.8 |
| R333 | 7030003640 | S.RES ERJ3GEYJ 473 V (47 K) | B | 113.9/19.1 |
| R334 | 7030003640 | S.RES ERJ3GEYJ 473 V (47 K) | B | 110.7/19.5 |
| R335 | 7030003280 | S.RES ERJ3GEYJ 470 V (47) | B | 109.8/26.4 |
| R336 | 7030003640 | S.RES ERJ3GEYJ 473 V (47 K) | B | 115.5/25.8 |
| R337 | 7030003640 | S.RES ERJ3GEYJ 473 V (47 K) | B | 125.1/23.6 |
| R338 | 7030003640 | S.RES ERJ3GEYJ 473 V (47 K) | B | 125.2/20.6 |
| R339 | 7030003280 | S.RES ERJ3GEYJ 470 V (47) | B | 120.1/27.7 |
| R340 | 7030003280 | S.RES ERJ3GEYJ 470 V (47) | B | 130.8/38.1 |
| R341 | 7030003640 | S.RES ERJ3GEYJ 473 V (47 K) | B | 135.7/33.5 |
| R342 | 7030003280 | S.RES ERJ3GEYJ 470 V (47) | B | 121.7/36.9 |
| R343 | 7030003640 | S.RES ERJ3GEYJ 473 V (47 K) | B | 119.5/30 |
| R344 | 7030003520 | S.RES ERJ3GEYJ 472 V (4.7 K) | B | 129.1/29.1 |
| R345 | 7030003520 | S.RES ERJ3GEYJ 472 V (4.7 K) | B | 116.9/30 |
| R350 | 7030003860 | S.RES ERJ3GE JPW V | T | 119.5/49 |
| R351 | 7030003860 | S.RES ERJ3GE JPW V | B | 100.6/83.2 |
| R353 | 7030003860 | S.RES ERJ3GE JPW V | B | 187.5/12.3 |
| R355 | 7030003860 | S.RES ERJ3GE JPW V | B | 187.5/13.6 |
| R356 | 7030003860 | S.RES ERJ3GE JPW V | B | 185.3/9.9 |
| R361 | 7030003320 | S.RES ERJ3GEYJ 101 V (100) | T | 193.5/25.6 |
| R401 | 7030003320 | S.RES ERJ3GEYJ 101 V (100) | B | 39.9/44.9 |
| R403 | 7030003560 | S.RES ERJ3GEYJ 103 V (10 K) | B | 16.5/35.6 |
| R404 | 7030003560 | S.RES ERJ3GEYJ 103 V (10 K) | B | 22.8/35.6 |
| R405 | 7030003560 | S.RES ERJ3GEYJ 103 V (10 K) | B | 7.9/40.8 |
| R406 | 7030003560 | S.RES ERJ3GEYJ 103 V (10 K) | T | 24.3/46.5 |
| R407 | 7030003560 | S.RES ERJ3GEYJ 103 V (10 K) | T | 22.5/47.2 |
| R408 | 7030003560 | S.RES ERJ3GEYJ 103 V (10 K) | T | 28.1/51.8 |
| R409 | 7030003560 | S.RES ERJ3GEYJ 103 V (10 K) | T | 22.9/57 |
| R410 | 7030003560 | S.RES ERJ3GEYJ 103 V (10 K) | T | 20.3/57 |
| R411 | 7030003560 | S.RES ERJ3GEYJ 103 V (10 K) | T | 24.2/57 |
| R412 | 7030003560 | S.RES ERJ3GEYJ 103 V (10 K) | T | 25.5/57 |
| R413 | 7030003560 | S.RES ERJ3GEYJ 103 V (10 K) | T | 26.8/57 |
| R414 | 7030003560 | S.RES ERJ3GEYJ 103 V (10 K) | T | 21.6/57 |
| R415 | 7030003560 | S.RES ERJ3GEYJ 103 V (10 K) | B | 25.6/26.2 |
| R416 | 7030003560 | S.RES ERJ3GEYJ 103 V (10 K) | B | 24.3/26.2 |
| R417 | 7030003560 | S.RES ERJ3GEYJ 103 V (10 K) | B | 23/26.2 |
| R418 | 7030003320 | S.RES ERJ3GEYJ 101 V (100) | B | 36.1/82.5 |
| R419 | 7030003440 | S.RES ERJ3GEYJ 102 V (1 K) | B | 10.4/83.3 |
| R420 | 7030003580 | S.RES ERJ3GEYJ 153 V (15 K) | B | 11/81.5 |
| R421 | 7030003470 | S.RES ERJ3GEYJ 182 V (1.8 K) | B | 12.3/76.4 |
| R422 | 7030003250 | S.RES ERJ3GEYJ 270 V (27) | B | 11.5/74.2 |
| R423 | 7030003560 | S.RES ERJ3GEYJ 103 V (10 K) | B | 14.6/90.2 |
| R424 | 7030003560 | S.RES ERJ3GEYJ 103 V (10 K) | B | 11.5/85.7 |
| R425 | 7030003380 | S.RES ERJ3GEYJ 331 V (330) | T | 9.3/96.4 |
| R426 | 7030003380 | S.RES ERJ3GEYJ 331 V (330) | T | 9.3/94.9 |
| R427 | 7030003380 | S.RES ERJ3GEYJ 331 V (330) | T | 9.3/93.1 |
| R428 | 7030003320 | S.RES ERJ3GEYJ 101 V (100) | B | 147.4/21.2 |

M.=Mounted side (T: Mounted on the Top side, B: Mounted on the Bottom side)
S.=Surface mount

## [LOGIC UNIT]

| REF NO. | PARTS NO. | DESCRIPTION | M. | H/V LOCATION |
|---|---|---|---|---|
| R429 | 7030003320 | S.RES ERJ3GEYJ 101 V (100) | B | 148.7/21.2 |
| R430 | 7030003320 | S.RES ERJ3GEYJ 101 V (100) | B | 151.3/21.2 |
| R431 | 7030003320 | S.RES ERJ3GEYJ 101 V (100) | B | 150/21.2 |
| R432 | 7030003320 | S.RES ERJ3GEYJ 101 V (100) | B | 154.3/15.2 |
| R433 | 7030003320 | S.RES ERJ3GEYJ 101 V (100) | B | 155.6/15.2 |
| R434 | 7030003320 | S.RES ERJ3GEYJ 101 V (100) | B | 155.6/18.4 |
| R435 | 7030003320 | S.RES ERJ3GEYJ 101 V (100) | B | 154.3/18.4 |
| R436 | 7030003340 | S.RES ERJ3GEYJ 151 V (150) | B | 156.5/6.7 |
| R437 | 7030003340 | S.RES ERJ3GEYJ 151 V (150) | B | 158.5/6.7 |
| R438 | 7030003340 | S.RES ERJ3GEYJ 151 V (150) | B | 162.5/6.7 |
| R439 | 7030003340 | S.RES ERJ3GEYJ 151 V (150) | B | 164.5/6.7 |
| R440 | 7030003340 | S.RES ERJ3GEYJ 151 V (150) | B | 156.5/4.1 |
| R441 | 7030003340 | S.RES ERJ3GEYJ 151 V (150) | B | 158.5/4.1 |
| R442 | 7030003340 | S.RES ERJ3GEYJ 151 V (150) | B | 164.5/4.1 |
| R443 | 7030003340 | S.RES ERJ3GEYJ 151 V (150) | B | 162.5/4.1 |
| R450 | 7030003860 | S.RES ERJ3GE JPW V | T | 36.8/35.4 |
| R601 | 7030003620 | S.RES ERJ3GEYJ 333 V (33 K) | B | 175/55.4 |
| R602 | 7030003590 | S.RES ERJ3GEYJ 183 V (18 K) | B | 171.3/53.1 |
| R603 | 7030003540 | S.RES ERJ3GEYJ 682 V (6.8 K) | B | 173.1/55.2 |
| R604 | 7030003640 | S.RES ERJ3GEYJ 473 V (47 K) | B | 171.3/55.7 |
| R605 | 7030003680 | S.RES ERJ3GEYJ 104 V (100 K) | B | 167.3/55 |
| R606 | 7030003680 | S.RES ERJ3GEYJ 104 V (100 K) | B | 102.8/31.6 |
| R607 | 7030003350 | S.RES ERJ3GEYJ 181 V (180) | B | 87.7/14.2 |
| R608 | 7030003520 | S.RES ERJ3GEYJ 472 V (4.7 K) | B | 90.5/14.2 |
| R609 | 7030003440 | S.RES ERJ3GEYJ 102 V (1 K) | T | 80.8/23.6 |
| R610 | 7030003440 | S.RES ERJ3GEYJ 102 V (1 K) | T | 80.8/24.9 |
| R611 | 7030003440 | S.RES ERJ3GEYJ 102 V (1 K) | T | 80.8/26.2 |
| R612 | 7030003440 | S.RES ERJ3GEYJ 102 V (1 K) | T | 80.1/27.5 |
| R613 | 7030003440 | S.RES ERJ3GEYJ 102 V (1 K) | T | 83.4/27.9 |
| R614 | 7030003440 | S.RES ERJ3GEYJ 102 V (1 K) | T | 83.4/29.2 |
| R615 | 7030003440 | S.RES ERJ3GEYJ 102 V (1 K) | T | 83.4/30.5 |
| R616 | 7030003440 | S.RES ERJ3GEYJ 102 V (1 K) | T | 83.4/31.8 |
| R617 | 7030003800 | S.RES ERJ3GEYJ 105 V (1 M) | T | 86.5/31.8 |
| R618 | 7030003800 | S.RES ERJ3GEYJ 105 V (1 M) | T | 86.5/30.5 |
| R619 | 7030003800 | S.RES ERJ3GEYJ 105 V (1 M) | T | 86.5/29.2 |
| R620 | 7030003800 | S.RES ERJ3GEYJ 105 V (1 M) | T | 86.5/27.9 |
| R621 | 7030003800 | S.RES ERJ3GEYJ 105 V (1 M) | T | 84.1/26.6 |
| R622 | 7030003800 | S.RES ERJ3GEYJ 105 V (1 M) | T | 84.1/25.3 |
| R623 | 7030003800 | S.RES ERJ3GEYJ 105 V (1 M) | T | 84.3/23.6 |
| R624 | 7030003800 | S.RES ERJ3GEYJ 105 V (1 M) | T | 84.3/22.3 |
| R625 | 7030003640 | S.RES ERJ3GEYJ 473 V (47 K) | B | 68.6/27.3 |
| R626 | 7030003600 | S.RES ERJ3GEYJ 223 V (22 K) | B | 68.6/28.6 |
| R627 | 7030003640 | S.RES ERJ3GEYJ 473 V (47 K) | B | 66.3/36.4 |
| R628 | 7030003640 | S.RES ERJ3GEYJ 473 V (47 K) | B | 66.3/35.1 |
| R629 | 7030003640 | S.RES ERJ3GEYJ 473 V (47 K) | B | 71.2/34.9 |
| R630 | 7030003520 | S.RES ERJ3GEYJ 472 V (4.7 K) | B | 68.6/32.5 |
| R631 | 7030003520 | S.RES ERJ3GEYJ 472 V (4.7 K) | T | 67.4/27 |
| R632 | 7030003520 | S.RES ERJ3GEYJ 472 V (4.7 K) | T | 67.4/30.9 |
| R633 | 7030003520 | S.RES ERJ3GEYJ 472 V (4.7 K) | T | 67.4/28.3 |
| R634 | 7030003520 | S.RES ERJ3GEYJ 472 V (4.7 K) | B | 66.3/33.8 |
| R635 | 7030003520 | S.RES ERJ3GEYJ 472 V (4.7 K) | T | 67.4/29.6 |
| R636 | 7030003640 | S.RES ERJ3GEYJ 473 V (47 K) | B | 58.1/19.5 |
| R637 | 7030003640 | S.RES ERJ3GEYJ 473 V (47 K) | B | 61.8/19.5 |
| R639 | 7030003640 | S.RES ERJ3GEYJ 473 V (47 K) | T | 99.1/19 |
| R640 | 7030003640 | S.RES ERJ3GEYJ 473 V (47 K) | T | 97.8/19 |
| R641 | 7030003640 | S.RES ERJ3GEYJ 473 V (47 K) | T | 96.5/19 |
| R642 | 7030003640 | S.RES ERJ3GEYJ 473 V (47 K) | T | 95.2/19 |
| R643 | 7030003600 | S.RES ERJ3GEYJ 223 V (22 K) | B | 80.9/46.3 |
| R644 | 7030003560 | S.RES ERJ3GEYJ 103 V (10 K) | B | 82.2/46.3 |
| R645 | 7030003520 | S.RES ERJ3GEYJ 472 V (4.7 K) | T | 93.1/40.9 |
| R646 | 7030003720 | S.RES ERJ3GEYJ 224 V (220 K) | B | 101.8/41.5 |
| R647 | 7030003720 | S.RES ERJ3GEYJ 224 V (220 K) | B | 102.8/44.1 |
| R648 | 7030003720 | S.RES ERJ3GEYJ 224 V (220 K) | B | 103.8/41.5 |
| R649 | 7030003720 | S.RES ERJ3GEYJ 224 V (220 K) | B | 104.8/44.1 |
| R650 | 7030003720 | S.RES ERJ3GEYJ 224 V (220 K) | B | 105.8/41.5 |
| R651 | 7030003720 | S.RES ERJ3GEYJ 224 V (220 K) | B | 106.8/44.1 |
| R652 | 7030003720 | S.RES ERJ3GEYJ 224 V (220 K) | B | 107.8/41.5 |
| R653 | 7030003720 | S.RES ERJ3GEYJ 224 V (220 K) | B | 108.7/44.1 |
| R654 | 7030003520 | S.RES ERJ3GEYJ 472 V (4.7 K) | B | 102.8/39.2 |
| R655 | 7030003520 | S.RES ERJ3GEYJ 472 V (4.7 K) | B | 102.8/37.7 |
| R656 | 7030003520 | S.RES ERJ3GEYJ 472 V (4.7 K) | T | 144.4/59.9 |
| R657 | 7030003720 | S.RES ERJ3GEYJ 224 V (220 K) | B | 68.6/26 |
| R658 | 7030003640 | S.RES ERJ3GEYJ 473 V (47 K) | B | 84.2/44.2 |
| R659 | 7030003640 | S.RES ERJ3GEYJ 473 V (47 K) | B | 84.2/45.5 |
| R660 | 7030003640 | S.RES ERJ3GEYJ 473 V (47 K) | B | 102.8/29.5 |
| R661 | 7030003640 | S.RES ERJ3GEYJ 473 V (47 K) | B | 69.4/16.4 |
| R662 | 7030003640 | S.RES ERJ3GEYJ 473 V (47 K) | B | 89.2/14.2 |
| R663 | 7030003640 | S.RES ERJ3GEYJ 473 V (47 K) | B | 71.2/15.9 |
| R664 | 7030003640 | S.RES ERJ3GEYJ 473 V (47 K) | B | 71.2/17.2 |
| R665 | 7030003560 | S.RES ERJ3GEYJ 103 V (10 K) | B | 93.1/14.2 |
| R666 | 7030003560 | S.RES ERJ3GEYJ 103 V (10 K) | B | 78.3/16.5 |
| R667 | 7030003560 | S.RES ERJ3GEYJ 103 V (10 K) | B | 77/16 |
| R668 | 7030003640 | S.RES ERJ3GEYJ 473 V (47 K) | B | 84.9/16.8 |
| R669 | 7030003640 | S.RES ERJ3GEYJ 473 V (47 K) | B | 71.2/14.6 |
| R670 | 7030003640 | S.RES ERJ3GEYJ 473 V (47 K) | T | 94.4/43.5 |
| R671 | 7030003640 | S.RES ERJ3GEYJ 473 V (47 K) | T | 95.7/43.5 |
| R672 | 7030003640 | S.RES ERJ3GEYJ 473 V (47 K) | B | 75.7/16.8 |
| R673 | 7030003640 | S.RES ERJ3GEYJ 473 V (47 K) | B | 74.4/16.8 |
| R674 | 7030003640 | S.RES ERJ3GEYJ 473 V (47 K) | T | 91.3/36.8 |
| R675 | 7030003640 | S.RES ERJ3GEYJ 473 V (47 K) | T | 89.1/31.8 |
| R676 | 7030003640 | S.RES ERJ3GEYJ 473 V (47 K) | B | 94.4/14.2 |
| R677 | 7030003520 | S.RES ERJ3GEYJ 472 V (4.7 K) | T | 146.1/65.1 |
| R678 | 7030003720 | S.RES ERJ3GEYJ 224 V (220 K) | B | 68.6/22.1 |
| R679 | 7030003640 | S.RES ERJ3GEYJ 473 V (47 K) | B | 91.8/14.2 |
| R680 | 7030003520 | S.RES ERJ3GEYJ 472 V (4.7 K) | T | 144.6/65.1 |
| R681 | 7030003520 | S.RES ERJ3GEYJ 472 V (4.7 K) | T | 147.5/65.1 |
| R682 | 7030003520 | S.RES ERJ3GEYJ 472 V (4.7 K) | B | 152.7/60.8 |
| R683 | 7030003720 | S.RES ERJ3GEYJ 224 V (220 K) | B | 68.6/23.4 |
| R684 | 7030003640 | S.RES ERJ3GEYJ 473 V (47 K) | B | 80.2/16.2 |
| R685 | 7030003520 | S.RES ERJ3GEYJ 472 V (4.7 K) | B | 152.7/62.1 |
| R686 | 7030003520 | S.RES ERJ3GEYJ 472 V (4.7 K) | B | 152.7/59.5 |
| R687 | 7030003520 | S.RES ERJ3GEYJ 472 V (4.7 K) | B | 152.1/53.6 |
| R688 | 7030003720 | S.RES ERJ3GEYJ 224 V (220 K) | B | 68.6/24.7 |
| R689 | 7030003520 | S.RES ERJ3GEYJ 472 V (4.7 K) | B | 153/56.2 |
| R690 | 7030003520 | S.RES ERJ3GEYJ 472 V (4.7 K) | B | 153/54.9 |

## [LOGIC UNIT]

| REF NO. | PARTS NO. | DESCRIPTION | M. | H/V LOCATION |
|---|---|---|---|---|
| R691 | 7030003640 | S.RES ERJ3GEYJ 473 V (47 K) | B | 66/31.9 |
| R701 | 7030003860 | S.RES ERJ3GE JPW V | T | 93.1/43.5 |
| R801 | 7030003560 | S.RES ERJ3GEYJ 103 V (10 K) | T | 158.2/72.8 |
| R802 | 7030006210 | S.RES ERJ12YJ4R7U (4.7) | T | 162.3/71.2 |
| R803 | 7030003440 | S.RES ERJ3GEYJ 102 V (1 K) | T | 159.5/72.8 |
| R804 | 7030006210 | S.RES ERJ12YJ4R7U (4.7) | T | 168.9/71.2 |
| R805 | 7030003440 | S.RES ERJ3GEYJ 102 V (1 K) | T | 166.1/72.8 |
| R806 | 7030003560 | S.RES ERJ3GEYJ 103 V (10 K) | T | 164.8/72.8 |
| R807 | 7030006210 | S.RES ERJ12YJ4R7U (4.7) | T | 175.5/71.2 |
| R808 | 7030003440 | S.RES ERJ3GEYJ 102 V (1 K) | T | 173/72.8 |
| R809 | 7030003560 | S.RES ERJ3GEYJ 103 V (10 K) | T | 171.6/72.8 |
| R810 | 7030003320 | S.RES ERJ3GEYJ 101 V (100) | B | 154.9/29.9 |
| R811 | 7030003320 | S.RES ERJ3GEYJ 101 V (100) | B | 154.9/27.5 |
| R812 | 7030010440 | S.RES ERJ1TYJ 680U (68) | B | 133/111.2 |
| R813 | 7030003560 | S.RES ERJ3GEYJ 103 V (10 K) | B | 192.6/10 |
| R814 | 7030003440 | S.RES ERJ3GEYJ 102 V (1 K) | T | 105.6/116.6 |
| R816 | 7030003560 | S.RES ERJ3GEYJ 103 V (10 K) | T | 158.9/74.7 |
| R817 | 7030003560 | S.RES ERJ3GEYJ 103 V (10 K) | T | 161.5/74.7 |
| R818 | 7030000140 | S.RES MCR10EZHJ 10 (100) | T | 155.6/78.2 |
| R819 | 7030007190 | S.RES ERJ12YJ220U (22) | T | 135.4/111 |
| R821 | 7030003370 | S.RES ERJ3GEYJ 271 V (270) | B | 15.3/100 |
| R822 | 7030009720 | S.RES ERJ12YJ102U (1 K) | T | 19.9/103.2 |
| R823 | 7030003810 | S.RES ERJ3GEYJ 125 V (1.2 M) | B | 16.8/109.5 |
| R824 | 7030003810 | S.RES ERJ3GEYJ 125 V (1.2 M) | B | 13.5/107.1 |
| R825 | 7030008170 | S.RES ERJ12YJ1R0U (1) | B | 37/112.2 |
| R826 | 7030003610 | S.RES ERJ3GEYJ 273 V (27 K) | B | 16.8/110.8 |
| R827 | 7030003610 | S.RES ERJ3GEYJ 273 V (27 K) | B | 13.5/109.9 |
| R828 | 7030003560 | S.RES ERJ3GEYJ 103 V (10 K) | B | 25.4/101.5 |
| R829 | 7030000340 | S.RES MCR10EZHJ 470 (471) | B | 20.6/104.5 |
| R830 | 7030003600 | S.RES ERJ3GEYJ 223 V (22 K) | B | 18.5/100 |
| R832 | 7030003600 | S.RES ERJ3GEYJ 223 V (22 K) | B | 18.5/98.7 |
| R833 | 7030003560 | S.RES ERJ3GEYJ 103 V (10 K) | B | 18.5/97.4 |
| R850 | 7030003860 | S.RES ERJ3GE JPW V | B | 182.4/50.2 |
| R851 | 7030003680 | S.RES ERJ3GEYJ 104 V (100 K) | B | 187.1/61.9 |
| R852 | 7030003680 | S.RES ERJ3GEYJ 104 V (100 K) | B | 185/61.9 |
| R853 | 7030003770 | S.RES ERJ3GEYJ 564 V (560 K) | B | 183.7/61.9 |
| R854 | 7030003770 | S.RES ERJ3GEYJ 564 V (560 K) | B | 188.4/61.9 |
| R855 | 7030003520 | S.RES ERJ3GEYJ 472 V (4.7 K) | B | 191.5/61.9 |
| R856 | 7030003520 | S.RES ERJ3GEYJ 472 V (4.7 K) | B | 180.6/61.9 |
| R857 | 7030003560 | S.RES ERJ3GEYJ 103 V (10 K) | B | 144.7/14.2 |
| R858 | 7030003460 | S.RES ERJ3GEYJ 152 V (1.5 K) | B | 144.7/12.9 |
| R859 | 7030003470 | S.RES ERJ3GEYJ 182 V (1.8 K) | B | 142.1/12.9 |
| R860 | 7030003500 | S.RES ERJ3GEYJ 332 V (3.3 K) | B | 144.7/15.5 |
| R861 | 7030003480 | S.RES ERJ3GEYJ 222 V (2.2 K) | B | 141.4/14.9 |
| R862 | 7030003380 | S.RES ERJ3GEYJ 331 V (330) | B | 147.7/3.8 |
| R863 | 7030003560 | S.RES ERJ3GEYJ 103 V (10 K) | B | 134.5/21.1 |
| R864 | 7030003460 | S.RES ERJ3GEYJ 152 V (1.5 K) | B | 134.5/19.8 |
| R865 | 7030003470 | S.RES ERJ3GEYJ 182 V (1.8 K) | B | 134.5/18.5 |
| R866 | 7030003500 | S.RES ERJ3GEYJ 332 V (3.3 K) | B | 131.7/17.2 |
| R867 | 7030003480 | S.RES ERJ3GEYJ 222 V (2.2 K) | B | 131.7/18.5 |
| R868 | 7030003380 | S.RES ERJ3GEYJ 331 V (330) | B | 134.1/3.8 |
| R869 | 7030003560 | S.RES ERJ3GEYJ 103 V (10 K) | B | 114.1/30 |
| R870 | 7030003560 | S.RES ERJ3GEYJ 103 V (10 K) | B | 144.7/7.2 |
| R871 | 7030003460 | S.RES ERJ3GEYJ 152 V (1.5 K) | B | 143.4/7.2 |
| R872 | 7030003470 | S.RES ERJ3GEYJ 182 V (1.8 K) | B | 142.1/7.2 |
| R873 | 7030003500 | S.RES ERJ3GEYJ 332 V (3.3 K) | B | 138.2/7.2 |
| R874 | 7030003480 | S.RES ERJ3GEYJ 222 V (2.2 K) | B | 139.5/7.2 |
| R875 | 7030003380 | S.RES ERJ3GEYJ 331 V (330) | B | 140.9/3.8 |
| R876 | 7030003410 | S.RES ERJ3GEYJ 561 V (560) | B | 120.5/14.9 |
| R877 | 7030003700 | S.RES ERJ3GEYJ 154 V (150 K) | B | 120.5/13.6 |
| R878 | 7030003520 | S.RES ERJ3GEYJ 472 V (4.7 K) | B | 120.5/12.3 |
| R879 | 7030003550 | S.RES ERJ3GEYJ 822 V (8.2 K) | B | 117.9/4.2 |
| R880 | 7030003690 | S.RES ERJ3GEYJ 124 V (120 K) | B | 119.7/5 |
| R881 | 7030003520 | S.RES ERJ3GEYJ 472 V (4.7 K) | B | 122.3/5 |
| R882 | 7030003410 | S.RES ERJ3GEYJ 561 V (560) | B | 108.9/15.9 |
| R883 | 7030003550 | S.RES ERJ3GEYJ 822 V (8.2 K) | B | 108.9/14.6 |
| R884 | 7030003520 | S.RES ERJ3GEYJ 472 V (4.7 K) | B | 108.9/13.3 |
| R885 | 7030003410 | S.RES ERJ3GEYJ 561 V (560) | B | 108.9/4.1 |
| R886 | 7030003550 | S.RES ERJ3GEYJ 822 V (8.2 K) | B | 109.7/6.2 |
| R887 | 7030003520 | S.RES ERJ3GEYJ 472 V (4.7 K) | B | 108.4/6.2 |
| R888 | 7030003360 | S.RES ERJ3GEYJ 221 V (220) | B | 181.6/48 |
| R889 | 7030003640 | S.RES ERJ3GEYJ 473 V (47 K) | B | 184.5/48.3 |
| R890 | 7030003360 | S.RES ERJ3GEYJ 221 V (220) | B | 191/47.8 |
| R891 | 7030003560 | S.RES ERJ3GEYJ 103 V (10 K) | B | 188.2/48.3 |
| R892 | 7030003730 | S.RES ERJ3GEYJ 274 V (270 K) | B | 190.2/50.2 |
| R893 | 7030003680 | S.RES ERJ3GEYJ 104 V (100 K) | B | 183.7/50.2 |
| R894 | 7030003200 | S.RES ERJ3GEYJ 100 V (10) | B | 193.2/55.7 |
| R895 | 7030003680 | S.RES ERJ3GEYJ 104 V (100 K) | B | 188.9/50.2 |
| R896 | 7030003200 | S.RES ERJ3GEYJ 100 V (10) | B | 192.9/52.8 |
| R901 | 7030003200 | S.RES ERJ3GEYJ 100 V (10) | T | 165.7/37.7 |
| R902 | 7030003200 | S.RES ERJ3GEYJ 100 V (10) | T | 166.1/30.8 |
| R903 | 7030003200 | S.RES ERJ3GEYJ 100 V (10) | T | 166.6/40.3 |
| R904 | 7030003200 | S.RES ERJ3GEYJ 100 V (10) | T | 167.1/28.2 |
| R905 | 7030003200 | S.RES ERJ3GEYJ 100 V (10) | T | 167.6/37.7 |
| R906 | 7030003200 | S.RES ERJ3GEYJ 100 V (10) | T | 168.1/30.8 |
| R907 | 7030003200 | S.RES ERJ3GEYJ 100 V (10) | T | 168.6/40.3 |
| R908 | 7030003200 | S.RES ERJ3GEYJ 100 V (10) | T | 169.1/28.2 |
| R909 | 7030003200 | S.RES ERJ3GEYJ 100 V (10) | T | 169.6/37.7 |
| R910 | 7030003200 | S.RES ERJ3GEYJ 100 V (10) | T | 170.1/30.8 |
| R911 | 7030003200 | S.RES ERJ3GEYJ 100 V (10) | T | 170.6/40.3 |
| R912 | 7030003200 | S.RES ERJ3GEYJ 100 V (10) | T | 171.6/37.7 |
| R913 | 7030003200 | S.RES ERJ3GEYJ 100 V (10) | T | 172.1/30.8 |
| R914 | 7030003200 | S.RES ERJ3GEYJ 100 V (10) | T | 172.6/40.3 |
| R915 | 7030003200 | S.RES ERJ3GEYJ 100 V (10) | T | 173.1/28.2 |
| R916 | 7030003200 | S.RES ERJ3GEYJ 100 V (10) | T | 173.6/37.7 |
| R917 | 7030003200 | S.RES ERJ3GEYJ 100 V (10) | T | 174.1/30.8 |
| R918 | 7030003200 | S.RES ERJ3GEYJ 100 V (10) | T | 174.6/40.3 |
| R919 | 7030003200 | S.RES ERJ3GEYJ 100 V (10) | T | 175.1/28.2 |
| R920 | 7030003200 | S.RES ERJ3GEYJ 100 V (10) | T | 175.6/37.7 |
| R921 | 7030003200 | S.RES ERJ3GEYJ 100 V (10) | T | 176.1/30.8 |
| R922 | 7030003200 | S.RES ERJ3GEYJ 100 V (10) | T | 176.6/40.3 |
| R923 | 7030003200 | S.RES ERJ3GEYJ 100 V (10) | T | 177.1/28.2 |
| R924 | 7030003200 | S.RES ERJ3GEYJ 100 V (10) | T | 177.6/37.7 |
| R925 | 7030003200 | S.RES ERJ3GEYJ 100 V (10) | T | 178.1/30.8 |
| R926 | 7030003200 | S.RES ERJ3GEYJ 100 V (10) | T | 178.6/40.3 |

M.=Mounted side (T: Mounted on the Top side, B: Mounted on the Bottom side)
S.=Surface mount

## [LOGIC UNIT]

| REF NO. | PARTS NO. | DESCRIPTION | M. | H/V LOCATION |
|---|---|---|---|---|
| R927 | 7030003200 | S.RES ERJ3GEYJ 100 V (10) | T | 179.1/28.2 |
| R928 | 7030003200 | S.RES ERJ3GEYJ 100 V (10) | T | 179.6/37.7 |
| R929 | 7030003200 | S.RES ERJ3GEYJ 100 V (10) | T | 180.1/30.8 |
| R930 | 7030003200 | S.RES ERJ3GEYJ 100 V (10) | T | 180.6/40.3 |
| R931 | 7030003200 | S.RES ERJ3GEYJ 100 V (10) | T | 181.1/28.2 |
| R932 | 7030003200 | S.RES ERJ3GEYJ 100 V (10) | T | 182.1/30.8 |
| R933 | 7030003200 | S.RES ERJ3GEYJ 100 V (10) | T | 182.6/40.3 |
| R934 | 7030003200 | S.RES ERJ3GEYJ 100 V (10) | T | 183.1/28.2 |
| R935 | 7030003200 | S.RES ERJ3GEYJ 100 V (10) | T | 183.6/37.7 |
| R936 | 7030003200 | S.RES ERJ3GEYJ 100 V (10) | T | 184.1/30.8 |
| R937 | 7030003200 | S.RES ERJ3GEYJ 100 V (10) | T | 185.1/28.2 |
| R938 | 7030003200 | S.RES ERJ3GEYJ 100 V (10) | T | 133/37.7 |
| R939 | 7030003200 | S.RES ERJ3GEYJ 100 V (10) | T | 134.2/30.8 |
| R940 | 7030003200 | S.RES ERJ3GEYJ 100 V (10) | T | 134.4/37.8 |
| R941 | 7030003200 | S.RES ERJ3GEYJ 100 V (10) | T | 135.2/28.3 |
| R942 | 7030003200 | S.RES ERJ3GEYJ 100 V (10) | T | 135.7/37.7 |
| R943 | 7030003200 | S.RES ERJ3GEYJ 100 V (10) | T | 136.2/30.8 |
| R944 | 7030003200 | S.RES ERJ3GEYJ 100 V (10) | T | 136.7/40.3 |
| R945 | 7030003200 | S.RES ERJ3GEYJ 100 V (10) | T | 137.2/28.3 |
| R946 | 7030003200 | S.RES ERJ3GEYJ 100 V (10) | T | 137.7/37.7 |
| R947 | 7030003200 | S.RES ERJ3GEYJ 100 V (10) | T | 138.2/30.8 |
| R949 | 7030003200 | S.RES ERJ3GEYJ 100 V (10) | T | 139.2/28.3 |
| R950 | 7030003200 | S.RES ERJ3GEYJ 100 V (10) | T | 139.7/37.7 |
| R951 | 7030003200 | S.RES ERJ3GEYJ 100 V (10) | T | 140.2/30.8 |
| R952 | 7030003200 | S.RES ERJ3GEYJ 100 V (10) | T | 140.7/40.3 |
| R953 | 7030003200 | S.RES ERJ3GEYJ 100 V (10) | T | 141.2/28.3 |
| R954 | 7030003200 | S.RES ERJ3GEYJ 100 V (10) | T | 141.7/37.7 |
| R955 | 7030003200 | S.RES ERJ3GEYJ 100 V (10) | T | 142.2/30.8 |
| R956 | 7030003200 | S.RES ERJ3GEYJ 100 V (10) | T | 142.7/40.3 |
| R957 | 7030003200 | S.RES ERJ3GEYJ 100 V (10) | T | 143.2/28.3 |
| R958 | 7030003200 | S.RES ERJ3GEYJ 100 V (10) | T | 143.7/37.7 |
| R959 | 7030003200 | S.RES ERJ3GEYJ 100 V (10) | T | 144.2/30.8 |
| R960 | 7030003200 | S.RES ERJ3GEYJ 100 V (10) | T | 144.7/40.3 |
| R961 | 7030003200 | S.RES ERJ3GEYJ 100 V (10) | T | 145.7/37.7 |
| R962 | 7030003200 | S.RES ERJ3GEYJ 100 V (10) | T | 146.2/30.8 |
| R963 | 7030003200 | S.RES ERJ3GEYJ 100 V (10) | T | 146.7/40.3 |
| R964 | 7030003200 | S.RES ERJ3GEYJ 100 V (10) | T | 147.2/28.3 |
| R965 | 7030003200 | S.RES ERJ3GEYJ 100 V (10) | T | 147.7/37.7 |
| R966 | 7030003200 | S.RES ERJ3GEYJ 100 V (10) | T | 148.2/30.8 |
| R967 | 7030003200 | S.RES ERJ3GEYJ 100 V (10) | T | 148.7/40.3 |
| R968 | 7030003200 | S.RES ERJ3GEYJ 100 V (10) | T | 149.7/37.7 |
| R969 | 7030003200 | S.RES ERJ3GEYJ 100 V (10) | T | 150.2/28.3 |
| R970 | 7030003200 | S.RES ERJ3GEYJ 100 V (10) | T | 150.7/40.3 |
| R971 | 7030003200 | S.RES ERJ3GEYJ 100 V (10) | T | 151.2/30.8 |
| R974 | 7030003200 | S.RES ERJ3GEYJ 100 V (10) | T | 153.2/30.8 |
| R975 | 7030003200 | S.RES ERJ3GEYJ 100 V (10) | B | 214.5/83.4 |
| R976 | 7030003200 | S.RES ERJ3GEYJ 100 V (10) | B | 220.6/83 |
| R977 | 7030003200 | S.RES ERJ3GEYJ 100 V (10) | B | 214.5/86 |
| R978 | 7030003200 | S.RES ERJ3GEYJ 100 V (10) | B | 220.6/87 |
| R979 | 7030003200 | S.RES ERJ3GEYJ 100 V (10) | B | 214.5/88 |
| R980 | 7030003200 | S.RES ERJ3GEYJ 100 V (10) | B | 220.6/89 |
| R981 | 7030003200 | S.RES ERJ3GEYJ 100 V (10) | B | 220.6/91 |
| R982 | 7030003200 | S.RES ERJ3GEYJ 100 V (10) | B | 220.6/93 |
| R983 | 7030003200 | S.RES ERJ3GEYJ 100 V (10) | B | 214.5/94 |
| R984 | 7030003200 | S.RES ERJ3GEYJ 100 V (10) | B | 12.2/115.7 |
| R985 | 7030003200 | S.RES ERJ3GEYJ 100 V (10) | B | 13.6/115.7 |
| R986 | 7030003200 | S.RES ERJ3GEYJ 100 V (10) | B | 14.9/115.7 |
| R987 | 7030003200 | S.RES ERJ3GEYJ 100 V (10) | B | 16.2/115.7 |
| R988 | 7030003200 | S.RES ERJ3GEYJ 100 V (10) | B | 17.5/115.7 |
| R989 | 7030003200 | S.RES ERJ3GEYJ 100 V (10) | T | 181.6/37.7 |
| R990 | 7030003440 | S.RES ERJ3GEYJ 102 V (1 K) | B | 182.5/92.1 |
| R991 | 7030003440 | S.RES ERJ3GEYJ 102 V (1 K) | B | 183.5/83.5 |
| R992 | 7030003440 | S.RES ERJ3GEYJ 102 V (1 K) | B | 184.5/92.1 |
| R993 | 7030003440 | S.RES ERJ3GEYJ 102 V (1 K) | B | 185.5/83.5 |
| R994 | 7030003440 | S.RES ERJ3GEYJ 102 V (1 K) | B | 186.5/92.1 |
| R995 | 7030003440 | S.RES ERJ3GEYJ 102 V (1 K) | B | 187.5/83.5 |
| R996 | 7030003200 | S.RES ERJ3GEYJ 100 V (10) | B | 220.6/95.6 |
| R998 | 7030003440 | S.RES ERJ3GEYJ 102 V (1 K) | B | 190.5/92.1 |
| R999 | 7030003440 | S.RES ERJ3GEYJ 102 V (1 K) | B | 191.5/83.5 |
| R1000 | 7030003440 | S.RES ERJ3GEYJ 102 V (1 K) | B | 192.5/92.1 |
| R1003 | 7030003200 | S.RES ERJ3GEYJ 100 V (10) | B | 231.3/83 |
| R1004 | 7030003200 | S.RES ERJ3GEYJ 100 V (10) | B | 225.9/82.7 |
| R1005 | 7030003200 | S.RES ERJ3GEYJ 100 V (10) | B | 231.3/81 |
| R1006 | 7030003200 | S.RES ERJ3GEYJ 100 V (10) | B | 222.7/80 |
| R1007 | 7030003200 | S.RES ERJ3GEYJ 100 V (10) | B | 231.3/79 |
| R1008 | 7030003200 | S.RES ERJ3GEYJ 100 V (10) | B | 222.7/48.5 |
| R1009 | 7030003200 | S.RES ERJ3GEYJ 100 V (10) | B | 231.3/49.5 |
| R1010 | 7030003200 | S.RES ERJ3GEYJ 100 V (10) | B | 222.7/52.5 |
| R1011 | 7030003200 | S.RES ERJ3GEYJ 100 V (10) | B | 231.3/53.5 |
| R1012 | 7030003200 | S.RES ERJ3GEYJ 100 V (10) | B | 222.7/56.5 |
| R1013 | 7030003200 | S.RES ERJ3GEYJ 100 V (10) | B | 231.3/57.5 |
| R1014 | 7030003200 | S.RES ERJ3GEYJ 100 V (10) | B | 222.7/58.5 |
| R1015 | 7030003200 | S.RES ERJ3GEYJ 100 V (10) | B | 231.3/59.5 |
| R1016 | 7030003200 | S.RES ERJ3GEYJ 100 V (10) | T | 181/22.1 |
| R1017 | 7030003200 | S.RES ERJ3GEYJ 100 V (10) | T | 179.7/22.1 |
| R1018 | 7030003200 | S.RES ERJ3GEYJ 100 V (10) | T | 176.7/22.1 |
| R1019 | 7030003200 | S.RES ERJ3GEYJ 100 V (10) | T | 174.7/22.2 |
| R1020 | 7030003200 | S.RES ERJ3GEYJ 100 V (10) | T | 173.4/22.2 |
| R1021 | 7030003200 | S.RES ERJ3GEYJ 100 V (10) | T | 172.1/22.2 |
| R1022 | 7030003200 | S.RES ERJ3GEYJ 100 V (10) | T | 170.8/22.2 |
| R1023 | 7030003200 | S.RES ERJ3GEYJ 100 V (10) | T | 169.5/22.2 |
| R1024 | 7030003200 | S.RES ERJ3GEYJ 100 V (10) | B | 220.7/85 |
| R1025 | 7030003320 | S.RES ERJ3GEYJ 101 V (100) | B | 120.5/9.7 |
| R1026 | 7030003320 | S.RES ERJ3GEYJ 101 V (100) | B | 108.9/8.1 |
| R1027 | 7030003320 | S.RES ERJ3GEYJ 101 V (100) | B | 137.3/17.2 |
| R1028 | 7030003320 | S.RES ERJ3GEYJ 101 V (100) | B | 135.6/7.2 |
| R1029 | 7030003520 | S.RES ERJ3GEYJ 472 V (4.7 K) | B | 120.5/11 |
| R1030 | 7030003520 | S.RES ERJ3GEYJ 472 V (4.7 K) | B | 120.5/7.1 |
| R1031 | 7030003520 | S.RES ERJ3GEYJ 472 V (4.7 K) | B | 108.9/12 |
| R1032 | 7030003520 | S.RES ERJ3GEYJ 472 V (4.7 K) | B | 108.9/9.4 |
| R1033 | 7030003860 | S.RES ERJ3GE JPW V | T | 188.9/62.5 |
| R1035 | 7030003540 | S.RES ERJ3GEYJ 682 V (6.8 K) | B | 192.2/60.1 |
| R1036 | 7030003540 | S.RES ERJ3GEYJ 682 V (6.8 K) | B | 184.5/64.7 |
| R1041 | 7030003520 | S.RES ERJ3GEYJ 472 V (4.7 K) | B | 173.8/28.2 |
| R1042 | 7030003550 | S.RES ERJ3GEYJ 822 V (8.2 K) | T | 115.2/16.6 |

## [LOGIC UNIT]

| REF NO. | PARTS NO. | DESCRIPTION | M. | H/V LOCATION |
|---|---|---|---|---|
| R1052 | 7030008240 | S.RES ERJ12Y0R00U | T | 86.1/114.3 |
| R1053 | 7030008240 | S.RES ERJ12Y0R00U | T | 67.5/114.4 |
| R1054 | 7030008240 | S.RES ERJ12Y0R00U | T | 9.4/116.7 |
| R1056 | 7030003860 | S.RES ERJ3GE JPW V | T | 138.7/40.3 |
| R1057 | 7030003860 | S.RES ERJ3GE JPW V | B | 123.1/7.1 |
| R1101 | 7030003280 | S.RES ERJ3GEYJ 470 V (47) | T | 18.7/30.5 |
| R1102 | 7030003280 | S.RES ERJ3GEYJ 470 V (47) | T | 18.7/33.1 |
| R1103 | 7030003280 | S.RES ERJ3GEYJ 470 V (47) | T | 18.7/35.7 |
| R1104 | 7030003280 | S.RES ERJ3GEYJ 470 V (47) | T | 20.5/30.5 |
| R1105 | 7030003280 | S.RES ERJ3GEYJ 470 V (47) | T | 20.5/33.1 |
| R1106 | 7030003280 | S.RES ERJ3GEYJ 470 V (47) | T | 20.5/35.7 |
| R1107 | 7030003280 | S.RES ERJ3GEYJ 470 V (47) | T | 22.3/30.5 |
| R1108 | 7030003280 | S.RES ERJ3GEYJ 470 V (47) | T | 22.3/33.1 |
| R1109 | 7030003280 | S.RES ERJ3GEYJ 470 V (47) | T | 22.3/35.7 |
| R1110 | 7030003280 | S.RES ERJ3GEYJ 470 V (47) | T | 24.1/27.9 |
| R1111 | 7030003280 | S.RES ERJ3GEYJ 470 V (47) | T | 24.1/30.5 |
| R1112 | 7030003280 | S.RES ERJ3GEYJ 470 V (47) | T | 24.1/33.1 |
| R1113 | 7030003280 | S.RES ERJ3GEYJ 470 V (47) | T | 25.9/27.9 |
| R1114 | 7030003280 | S.RES ERJ3GEYJ 470 V (47) | T | 25.9/30.5 |
| R1115 | 7030003280 | S.RES ERJ3GEYJ 470 V (47) | T | 25.9/33.1 |
| R1116 | 7030003280 | S.RES ERJ3GEYJ 470 V (47) | T | 27.3/30.5 |
| R1117 | 7030003280 | S.RES ERJ3GEYJ 470 V (47) | T | 28.6/30.5 |
| R1118 | 7030003280 | S.RES ERJ3GEYJ 470 V (47) | T | 29.9/30.5 |
| R1119 | 7030003280 | S.RES ERJ3GEYJ 470 V (47) | T | 31.2/30.5 |
| R1120 | 7030003280 | S.RES ERJ3GEYJ 470 V (47) | T | 32.5/30.5 |
| R1121 | 7030003280 | S.RES ERJ3GEYJ 470 V (47) | T | 33.8/30.5 |
| R1122 | 7030003280 | S.RES ERJ3GEYJ 470 V (47) | T | 35.1/30.5 |
| R1123 | 7030003280 | S.RES ERJ3GEYJ 470 V (47) | T | 40.5/29.6 |
| R1124 | 7030003280 | S.RES ERJ3GEYJ 470 V (47) | T | 42.8/34.8 |
| R1125 | 7030003280 | S.RES ERJ3GEYJ 470 V (47) | T | 43.5/32.2 |
| R1126 | 7030003280 | S.RES ERJ3GEYJ 470 V (47) | T | 44.2/34.8 |
| R1127 | 7030003280 | S.RES ERJ3GEYJ 470 V (47) | T | 44.9/32.2 |
| R1128 | 7030003280 | S.RES ERJ3GEYJ 470 V (47) | T | 45.6/34.8 |
| R1129 | 7030003280 | S.RES ERJ3GEYJ 470 V (47) | T | 46.3/32.2 |
| R1130 | 7030003280 | S.RES ERJ3GEYJ 470 V (47) | T | 47/34.8 |
| R1131 | 7030003280 | S.RES ERJ3GEYJ 470 V (47) | T | 47.7/32.2 |
| R1132 | 7030003280 | S.RES ERJ3GEYJ 470 V (47) | T | 48.4/34.8 |
| R1133 | 7030003280 | S.RES ERJ3GEYJ 470 V (47) | T | 49.1/32.2 |
| R1134 | 7030003280 | S.RES ERJ3GEYJ 470 V (47) | T | 49.8/34.8 |
| R1135 | 7030003280 | S.RES ERJ3GEYJ 470 V (47) | T | 50.5/32.2 |
| R1136 | 7030003280 | S.RES ERJ3GEYJ 470 V (47) | T | 51.2/34.8 |
| R1137 | 7030003280 | S.RES ERJ3GEYJ 470 V (47) | T | 51.9/32.2 |
| R1138 | 7030003280 | S.RES ERJ3GEYJ 470 V (47) | T | 52.6/34.8 |
| R1139 | 7030003280 | S.RES ERJ3GEYJ 470 V (47) | T | 53.3/32.2 |
| R1140 | 7030003280 | S.RES ERJ3GEYJ 470 V (47) | T | 54/34.8 |
| R1141 | 7030003280 | S.RES ERJ3GEYJ 470 V (47) | T | 54.7/32.2 |
| R1142 | 7030003280 | S.RES ERJ3GEYJ 470 V (47) | T | 55.4/34.8 |
| R1143 | 7030003280 | S.RES ERJ3GEYJ 470 V (47) | T | 56.1/32.2 |
| R1144 | 7030003280 | S.RES ERJ3GEYJ 470 V (47) | T | 56.8/34.8 |
| R1145 | 7030003280 | S.RES ERJ3GEYJ 470 V (47) | T | 57.5/32.2 |
| R1146 | 7030003280 | S.RES ERJ3GEYJ 470 V (47) | T | 58.2/34.8 |
| R1151 | 7030003290 | S.RES ERJ3GEYJ 560 V (56) | T | 205.2/11.7 |
| R1152 | 7030003320 | S.RES ERJ3GEYJ 101 V (100) | T | 203.6/11.7 |
| R1153 | 7030003320 | S.RES ERJ3GEYJ 101 V (100) | T | 200.8/13.2 |
| R1154 | 7030003320 | S.RES ERJ3GEYJ 101 V (100) | T | 199.5/13.2 |
| R1155 | 7030003320 | S.RES ERJ3GEYJ 101 V (100) | B | 201.4/10.8 |
| R1156 | 7030003320 | S.RES ERJ3GEYJ 101 V (100) | T | 198.2/13.2 |
| R1157 | 7030003320 | S.RES ERJ3GEYJ 101 V (100) | B | 200.1/10.8 |
| R1158 | 7030003320 | S.RES ERJ3GEYJ 101 V (100) | T | 196.9/13.2 |
| R1159 | 7030003320 | S.RES ERJ3GEYJ 101 V (100) | B | 198.8/10.8 |
| R1160 | 7030003320 | S.RES ERJ3GEYJ 101 V (100) | T | 195.6/13.2 |
| R1161 | 7030003320 | S.RES ERJ3GEYJ 101 V (100) | B | 197.5/10.8 |
| R1162 | 7030003320 | S.RES ERJ3GEYJ 101 V (100) | B | 196.2/10.8 |
| R1163 | 7030003320 | S.RES ERJ3GEYJ 101 V (100) | T | 194.3/13.2 |
| R1164 | 7030003320 | S.RES ERJ3GEYJ 101 V (100) | T | 193/13.2 |
| R1165 | 7030003320 | S.RES ERJ3GEYJ 101 V (100) | T | 191.1/14.9 |
| R1166 | 7030003320 | S.RES ERJ3GEYJ 101 V (100) | T | 189.8/14.9 |
| R1167 | 7030003320 | S.RES ERJ3GEYJ 101 V (100) | T | 188.5/14.9 |
| R1168 | 7030003320 | S.RES ERJ3GEYJ 101 V (100) | T | 187.2/14.9 |
| R1169 | 7030003320 | S.RES ERJ3GEYJ 101 V (100) | T | 185.9/14.9 |
| R1170 | 7030003320 | S.RES ERJ3GEYJ 101 V (100) | T | 181.4/9.5 |
| | | | | |
| C1 | 4030011600 | S.CER C1608 JB 1E 104K-T | B | 69.7/83.3 |
| C2 | 4030011600 | S.CER C1608 JB 1E 104K-T | B | 68.1/83.3 |
| C3 | 4030011600 | S.CER C1608 JB 1E 104K-T | B | 63.3/83.3 |
| C4 | 4030011600 | S.CER C1608 JB 1E 104K-T | B | 59.3/83.3 |
| C5 | 4030011600 | S.CER C1608 JB 1E 104K-T | B | 48.9/83.3 |
| C6 | 4030011600 | S.CER C1608 JB 1E 104K-T | B | 66.9/100.4 |
| C7 | 4030011600 | S.CER C1608 JB 1E 104K-T | B | 62.1/100.4 |
| C8 | 4030011600 | S.CER C1608 JB 1E 104K-T | T | 69.7/107.5 |
| C9 | 4030011600 | S.CER C1608 JB 1E 104K-T | T | 68.1/107.5 |
| C10 | 4030011600 | S.CER C1608 JB 1E 104K-T | T | 63.3/107.5 |
| C11 | 4030011600 | S.CER C1608 JB 1E 104K-T | T | 59.3/107.5 |
| C12 | 4030011600 | S.CER C1608 JB 1E 104K-T | T | 48.9/107.5 |
| C13 | 4030011600 | S.CER C1608 JB 1E 104K-T | T | 66.6/90.9 |
| C14 | 4030011600 | S.CER C1608 JB 1E 104K-T | T | 61.9/90.9 |
| C51 | 4030011600 | S.CER C1608 JB 1E 104K-T | B | 105.5/54.7 |
| C52 | 4030011600 | S.CER C1608 JB 1E 104K-T | B | 97.1/46.1 |
| C53 | 4030011600 | S.CER C1608 JB 1E 104K-T | B | 94.4/46.1 |
| C54 | 4030011600 | S.CER C1608 JB 1E 104K-T | B | 106.6/51 |
| C55 | 4030011600 | S.CER C1608 JB 1E 104K-T | B | 109/65.9 |
| C56 | 4030011600 | S.CER C1608 JB 1E 104K-T | B | 114/65.9 |
| C57 | 4030011600 | S.CER C1608 JB 1E 104K-T | B | 127.6/63.1 |
| C58 | 4030011600 | S.CER C1608 JB 1E 104K-T | B | 127.7/55.9 |
| C59 | 4030011600 | S.CER C1608 JB 1E 104K-T | B | 117.5/46.1 |
| C60 | 4030011600 | S.CER C1608 JB 1E 104K-T | B | 111.5/46.1 |
| C61 | 4030009990 | S.CER C1608 CH 1H 200J-T | T | 143/78.1 |
| C62 | 4030011600 | S.CER C1608 JB 1E 104K-T | T | 139.9/100.6 |
| C63 | 4030008890 | S.CER C1608 JB 1H 273K-T | T | 144.5/100.6 |
| C64 | 4030011600 | S.CER C1608 JB 1E 104K-T | T | 146.7/102.5 |
| C65 | 4030011600 | S.CER C1608 JB 1E 104K-T | T | 96/34.2 |
| C66 | 4030011600 | S.CER C1608 JB 1E 104K-T | B | 34.1/27.4 |
| C101 | 4030011600 | S.CER C1608 JB 1E 104K-T | T | 23.3/71.9 |
| C102 | 4030011600 | S.CER C1608 JB 1E 104K-T | B | 43.2/48.2 |

M.=Mounted side (T: Mounted on the Top side, B: Mounted on the Bottom side)
S.=Surface mount

## [LOGIC UNIT]

| REF NO. | PARTS NO. | DESCRIPTION | M. | H/V LOCATION |
|---|---|---|---|---|
| C103 | 4030011600 | S.CER C1608 JB 1E 104K-T | B | 47.1/78 |
| C104 | 4030011600 | S.CER C1608 JB 1E 104K-T | B | 46.8/58.8 |
| C105 | 4030011600 | S.CER C1608 JB 1E 104K-T | B | 49.5/71 |
| C106 | 4030011600 | S.CER C1608 JB 1E 104K-T | B | 46.8/57.5 |
| C107 | 4030011600 | S.CER C1608 JB 1E 104K-T | B | 52/57.5 |
| C108 | 4030011600 | S.CER C1608 JB 1E 104K-T | B | 57.7/57.5 |
| C109 | 4030011600 | S.CER C1608 JB 1E 104K-T | B | 59.6/60.8 |
| C110 | 4030011600 | S.CER C1608 JB 1E 104K-T | B | 46.8/68 |
| C111 | 4550007520 | S.TAN F931A106MAABMA | B | 57.7/48.8 |
| C112 | 4030011600 | S.CER C1608 JB 1E 104K-T | B | 59/50.5 |
| C113 | 4550007520 | S.TAN F931A106MAABMA | B | 63.6/48.8 |
| C114 | 4030011600 | S.CER C1608 JB 1E 104K-T | B | 62/50.5 |
| C115 | 4550007520 | S.TAN F931A106MAABMA | B | 68.8/48.8 |
| C116 | 4030011600 | S.CER C1608 JB 1E 104K-T | B | 64.9/50.5 |
| C117 | 4030011600 | S.CER C1608 JB 1E 104K-T | B | 46.9/71 |
| C118 | 4030011600 | S.CER C1608 JB 1E 104K-T | B | 46.8/61.4 |
| C119 | 4030011600 | S.CER C1608 JB 1E 104K-T | B | 46.8/69.3 |
| C120 | 4030011600 | S.CER C1608 JB 1E 104K-T | B | 59.6/69.4 |
| C121 | 4030011600 | S.CER C1608 JB 1E 104K-T | B | 57.8/70.2 |
| C122 | 4030011600 | S.CER C1608 JB 1E 104K-T | B | 56.5/70.2 |
| C123 | 4030006860 | S.CER C1608 JB 1H 102K-T | B | 57.3/78 |
| C124 | 4030011600 | S.CER C1608 JB 1E 104K-T | B | 52.1/71 |
| C125 | 4030011600 | S.CER C1608 JB 1E 104K-T | B | 54.7/71 |
| C126 | 4030011600 | S.CER C1608 JB 1E 104K-T | B | 46.8/66.7 |
| C127 | 4030011600 | S.CER C1608 JB 1E 104K-T | B | 43.2/50.8 |
| C128 | 4030011600 | S.CER C1608 JB 1E 104K-T | B | 52.2/50.8 |
| C129 | 4030011600 | S.CER C1608 JB 1E 104K-T | B | 46.1/64.8 |
| C130 | 4030011600 | S.CER C1608 JB 1E 104K-T | B | 59.6/66.8 |
| C131 | 4030011600 | S.CER C1608 JB 1E 104K-T | B | 66.4/68.7 |
| C132 | 4030011600 | S.CER C1608 JB 1E 104K-T | B | 59.6/63.6 |
| C133 | 4030011600 | S.CER C1608 JB 1E 104K-T | B | 47.1/50.9 |
| C134 | 4030011600 | S.CER C1608 JB 1E 104K-T | B | 39.3/58.6 |
| C135 | 4030011600 | S.CER C1608 JB 1E 104K-T | B | 46.8/60.1 |
| C136 | 4030011600 | S.CER C1608 JB 1E 104K-T | B | 54.6/57.5 |
| C137 | 4030011600 | S.CER C1608 JB 1E 104K-T | B | 49.4/57.5 |
| C138 | 4030011600 | S.CER C1608 JB 1E 104K-T | B | 54.7/69.3 |
| C139 | 4030011600 | S.CER C1608 JB 1E 104K-T | B | 59.6/58.2 |
| C140 | 4030006900 | S.CER C1608 JB 1H 103K-T | B | 66.4/58.5 |
| C141 | 4030011600 | S.CER C1608 JB 1E 104K-T | T | 64.3/38.6 |
| C142 | 4030011600 | S.CER C1608 JB 1E 104K-T | T | 76.8/32.5 |
| C144 | 4030011600 | S.CER C1608 JB 1E 104K-T | T | 7.9/62.8 |
| C145 | 4030011600 | S.CER C1608 JB 1E 104K-T | T | 10/62.1 |
| C146 | 4030007020 | S.CER C1608 CH 1H 120J-T | T | 8.1/58.8 |
| C147 | 4030007020 | S.CER C1608 CH 1H 120J-T | T | 10/59.5 |
| C148 | 4030011600 | S.CER C1608 JB 1E 104K-T | T | 6.7/70.5 |
| C149 | 4030011600 | S.CER C1608 JB 1E 104K-T | T | 7.4/73.7 |
| C201 | 4030011600 | S.CER C1608 JB 1E 104K-T | B | 118.1/103.3 |
| C202 | 4030011600 | S.CER C1608 JB 1E 104K-T | B | 120.7/103.3 |
| C203 | 4030011600 | S.CER C1608 JB 1E 104K-T | B | 124.2/103.3 |
| C204 | 4030011600 | S.CER C1608 JB 1E 104K-T | B | 127.3/103.3 |
| C205 | 4030011600 | S.CER C1608 JB 1E 104K-T | B | 137.4/103.5 |
| C206 | 4030011600 | S.CER C1608 JB 1E 104K-T | B | 120.7/87.6 |
| C207 | 4030011600 | S.CER C1608 JB 1E 104K-T | B | 125.5/87.7 |
| C208 | 4030011600 | S.CER C1608 JB 1E 104K-T | B | 117.7/85.8 |
| C209 | 4030011600 | S.CER C1608 JB 1E 104K-T | B | 119.2/85.8 |
| C210 | 4030011600 | S.CER C1608 JB 1E 104K-T | B | 124/85.8 |
| C211 | 4030011600 | S.CER C1608 JB 1E 104K-T | B | 128/85.8 |
| C212 | 4030011600 | S.CER C1608 JB 1E 104K-T | B | 138.4/85.8 |
| C213 | 4030011600 | S.CER C1608 JB 1E 104K-T | B | 120.7/70 |
| C214 | 4030011600 | S.CER C1608 JB 1E 104K-T | B | 124.1/70 |
| C215 | 4030011600 | S.CER C1608 JB 1E 104K-T | B | 89.4/90.4 |
| C216 | 4030011600 | S.CER C1608 JB 1E 104K-T | B | 85.6/71.6 |
| C217 | 4030011600 | S.CER C1608 JB 1E 104K-T | B | 91.5/79.6 |
| C218 | 4030011600 | S.CER C1608 JB 1E 104K-T | B | 92.1/72.6 |
| C219 | 4030011600 | S.CER C1608 JB 1E 104K-T | B | 94.7/72.6 |
| C220 | 4030011600 | S.CER C1608 JB 1E 104K-T | B | 90.8/72.6 |
| C221 | 4030011600 | S.CER C1608 JB 1E 104K-T | B | 96.6/66.6 |
| C222 | 4030011600 | S.CER C1608 JB 1E 104K-T | B | 94.4/89.4 |
| C223 | 4030011600 | S.CER C1608 JB 1E 104K-T | B | 90.8/83.4 |
| C224 | 4030011600 | S.CER C1608 JB 1E 104K-T | B | 85.6/83.7 |
| C225 | 4030011600 | S.CER C1608 JB 1E 104K-T | B | 91.5/77 |
| C226 | 4030011600 | S.CER C1608 JB 1E 104K-T | B | 91.5/75.7 |
| C227 | 4030011600 | S.CER C1608 JB 1E 104K-T | B | 96.7/72.6 |
| C228 | 4030011600 | S.CER C1608 JB 1E 104K-T | B | 91.5/74.4 |
| C229 | 4030011600 | S.CER C1608 JB 1E 104K-T | B | 100.6/89.4 |
| C230 | 4030011600 | S.CER C1608 JB 1E 104K-T | B | 97.3/83.2 |
| C231 | 4030011600 | S.CER C1608 JB 1E 104K-T | B | 102.5/83.6 |
| C232 | 4030011600 | S.CER C1608 JB 1E 104K-T | B | 91.5/80.9 |
| C233 | 4030011600 | S.CER C1608 JB 1E 104K-T | B | 102.5/77.1 |
| C234 | 4030011600 | S.CER C1608 JB 1E 104K-T | B | 99.3/72.6 |
| C235 | 4030011600 | S.CER C1608 JB 1E 104K-T | B | 102.2/66.4 |
| C236 | 4030011600 | S.CER C1608 JB 1E 104K-T | B | 102.5/82.3 |
| C237 | 4030011600 | S.CER C1608 JB 1E 104K-T | B | 102.5/81 |
| C238 | 4030011600 | S.CER C1608 JB 1E 104K-T | B | 102.5/79.7 |
| C239 | 4030011600 | S.CER C1608 JB 1E 104K-T | B | 85.6/81.1 |
| C240 | 4030011600 | S.CER C1608 JB 1E 104K-T | B | 102.5/75.8 |
| C241 | 4030011600 | S.CER C1608 JB 1E 104K-T | B | 102.5/74.5 |
| C242 | 4030011600 | S.CER C1608 JB 1E 104K-T | B | 103.2/72.6 |
| C243 | 4030011600 | S.CER C1608 JB 1E 104K-T | B | 101.9/72.6 |
| C244 | 4030011600 | S.CER C1608 JB 1E 104K-T | B | 91.5/78.3 |
| C245 | 4030011600 | S.CER C1608 JB 1E 104K-T | B | 92.1/83.2 |
| C246 | 4030011600 | S.CER C1608 JB 1E 104K-T | B | 102.5/78.4 |
| C247 | 4030011600 | S.CER C1608 JB 1E 104K-T | B | 99.3/83.2 |
| C248 | 4030011600 | S.CER C1608 JB 1E 104K-T | B | 100.6/72.6 |
| C249 | 4030011600 | S.CER C1608 JB 1E 104K-T | B | 93.4/72.6 |
| C250 | 4030007050 | S.CER C1608 CH 1H 220J-T | T | 101/91.3 |
| C251 | 4030007050 | S.CER C1608 CH 1H 220J-T | T | 98.4/91.3 |
| C252 | 4030006990 | S.CER C1608 CH 1H 080D-T | T | 98.9/63.9 |
| C253 | 4030006990 | S.CER C1608 CH 1H 080D-T | T | 101.5/63.9 |
| C254 | 4030006900 | S.CER C1608 JB 1H 103K-T | T | 83.7/84.6 |
| C255 | 4510008520 | S.ELE EEE1CA470SP | T | 101.3/100.8 |
| C256 | 4030006900 | S.CER C1608 JB 1H 103K-T | T | 83/64.1 |
| C257 | 4510007130 | S.ELE EEFCD 0J 470R | T | 78.5/66.3 |
| C258 | 4030011600 | S.CER C1608 JB 1E 104K-T | T | 84.9/61 |
| C259 | 4030011600 | S.CER C1608 JB 1E 104K-T | B | 85.6/76.9 |

## [LOGIC UNIT]

| REF NO. | PARTS NO. | DESCRIPTION | M. | H/V LOCATION |
|---|---|---|---|---|
| C260 | 4030011600 | S.CER C1608 JB 1E 104K-T | T | 214.2/33 |
| C261 | 4030011600 | S.CER C1608 JB 1E 104K-T | T | 214.2/31.7 |
| C262 | 4030011600 | S.CER C1608 JB 1E 104K-T | T | 214.2/29.7 |
| C263 | 4030011600 | S.CER C1608 JB 1E 104K-T | T | 214.2/28.4 |
| C264 | 4030011600 | S.CER C1608 JB 1E 104K-T | T | 205.4/23.2 |
| C265 | 4510008540 | S.ELE EEE1CA100SR | T | 214.2/36.7 |
| C266 | 4030011600 | S.CER C1608 JB 1E 104K-T | T | 196.3/28.7 |
| C267 | 4030007100 | S.CER C1608 CH 1H 560J-T | B | 219.4/32.5 |
| C268 | 4030007100 | S.CER C1608 CH 1H 560J-T | B | 219.4/29.5 |
| C269 | 4030007100 | S.CER C1608 CH 1H 560J-T | B | 219.4/26.5 |
| C270 | 4030007050 | S.CER C1608 CH 1H 220J-T | B | 225/32.5 |
| C271 | 4030007050 | S.CER C1608 CH 1H 220J-T | B | 225/29.5 |
| C272 | 4030007050 | S.CER C1608 CH 1H 220J-T | B | 225/26.5 |
| C273 | 4030011600 | S.CER C1608 JB 1E 104K-T | T | 194.2/16.5 |
| C274 | 4030007170 | S.CER C1608 CH 1H 221J-T | T | 203.9/16.5 |
| C275 | 4030007170 | S.CER C1608 CH 1H 221J-T | T | 203.9/19.4 |
| C276 | 4030007050 | S.CER C1608 CH 1H 220J-T | B | 217.8/9.3 |
| C277 | 4030007050 | S.CER C1608 CH 1H 220J-T | B | 220.7/9.3 |
| C278 | 4510008500 | S.ELE EEE1CA101WP | T | 223.4/38.4 |
| C279 | 4030007050 | S.CER C1608 CH 1H 220J-T | B | 227.8/9.3 |
| C280 | 4030007050 | S.CER C1608 CH 1H 220J-T | B | 230.7/9.3 |
| C281 | 4510008500 | S.ELE EEE1CA101WP | T | 223.4/30.6 |
| C282 | 4030011600 | S.CER C1608 JB 1E 104K-T | B | 215.6/39.1 |
| C283 | 4510008550 | S.ELE EEE1HA010SR | T | 217.2/42 |
| C284 | 4030011600 | S.CER C1608 JB 1E 104K-T | B | 104.6/21.2 |
| C285 | 4510008540 | S.ELE EEE1CA100SR | T | 105.6/37.4 |
| C286 | 4510008540 | S.ELE EEE1CA100SR | T | 105.6/32.6 |
| C287 | 4030011600 | S.CER C1608 JB 1E 104K-T | B | 104.6/23.2 |
| C288 | 4510008540 | S.ELE EEE1CA100SR | T | 105.6/27.8 |
| C289 | 4030011600 | S.CER C1608 JB 1E 104K-T | B | 104.6/24.5 |
| C290 | 4030011600 | S.CER C1608 JB 1E 104K-T | B | 115.5/21.2 |
| C291 | 4510008540 | S.ELE EEE1CA100SR | T | 111.7/37.4 |
| C292 | 4510008540 | S.ELE EEE1CA100SR | T | 111.7/32.6 |
| C293 | 4030011600 | S.CER C1608 JB 1E 104K-T | B | 115.5/23.2 |
| C294 | 4510008540 | S.ELE EEE1CA100SR | T | 111.7/27.8 |
| C295 | 4030011600 | S.CER C1608 JB 1E 104K-T | B | 115.5/24.5 |
| C296 | 4030011600 | S.CER C1608 JB 1E 104K-T | B | 126.3/33.9 |
| C297 | 4510008540 | S.ELE EEE1CA100SR | T | 123.9/39.8 |
| C298 | 4030011600 | S.CER C1608 JB 1E 104K-T | B | 126.3/31.3 |
| C299 | 4510008540 | S.ELE EEE1CA100SR | T | 123.9/35 |
| C300 | 4030011600 | S.CER C1608 JB 1E 104K-T | B | 114/34.6 |
| C301 | 4510008540 | S.ELE EEE1CA100SR | T | 117.8/39.8 |
| C302 | 4030011600 | S.CER C1608 JB 1E 104K-T | B | 113.3/32.5 |
| C303 | 4510008540 | S.ELE EEE1CA100SR | T | 117.8/35 |
| C401 | 4030011600 | S.CER C1608 JB 1E 104K-T | B | 28.2/61.5 |
| C402 | 4030011600 | S.CER C1608 JB 1E 104K-T | B | 22.3/61.5 |
| C403 | 4030011600 | S.CER C1608 JB 1E 104K-T | B | 8.7/53.3 |
| C404 | 4030011600 | S.CER C1608 JB 1E 104K-T | B | 8.7/45.6 |
| C405 | 4030011600 | S.CER C1608 JB 1E 104K-T | B | 20.2/35.6 |
| C406 | 4030011600 | S.CER C1608 JB 1E 104K-T | B | 25.4/35.6 |
| C407 | 4030011600 | S.CER C1608 JB 1E 104K-T | B | 29.7/35.6 |
| C408 | 4030011600 | S.CER C1608 JB 1E 104K-T | B | 38.5/42.3 |
| C409 | 4030011600 | S.CER C1608 JB 1E 104K-T | B | 38.7/47.5 |
| C410 | 4030011600 | S.CER C1608 JB 1E 104K-T | B | 38.7/51 |
| C411 | 4030011600 | S.CER C1608 JB 1E 104K-T | B | 40.9/36.2 |
| C412 | 4030006860 | S.CER C1608 JB 1H 102K-T | T | 29.3/44.7 |
| C413 | 4030006900 | S.CER C1608 JB 1H 103K-T | T | 26.7/44.7 |
| C414 | 4030007150 | S.CER C1608 CH 1H 151J-T | T | 28/44.7 |
| C415 | 4030011600 | S.CER C1608 JB 1E 104K-T | B | 15.2/30.5 |
| C416 | 4510008540 | S.ELE EEE1CA100SR | T | 13.7/28.8 |
| C417 | 4030011600 | S.CER C1608 JB 1E 104K-T | B | 15.2/31.8 |
| C418 | 4510008540 | S.ELE EEE1CA100SR | T | 13.7/33.6 |
| C419 | 4030006900 | S.CER C1608 JB 1H 103K-T | T | 36.9/26.6 |
| C420 | 4030007150 | S.CER C1608 CH 1H 151J-T | T | 36.9/25.3 |
| C421 | 4550007520 | S.TAN F931A106MAABMA | B | 19.7/26.8 |
| C422 | 4030011600 | S.CER C1608 JB 1E 104K-T | T | 20.8/66.3 |
| C423 | 4030011600 | S.CER C1608 JB 1E 104K-T | B | 35.3/85.1 |
| C424 | 4030011600 | S.CER C1608 JB 1E 104K-T | B | 38.1/77.1 |
| C425 | 4030011600 | S.CER C1608 JB 1E 104K-T | B | 34.6/71.4 |
| C426 | 4030011600 | S.CER C1608 JB 1E 104K-T | B | 34.8/67.7 |
| C427 | 4030011600 | S.CER C1608 JB 1E 104K-T | B | 26.8/62.8 |
| C428 | 4030011600 | S.CER C1608 JB 1E 104K-T | B | 20.8/62.8 |
| C429 | 4030011600 | S.CER C1608 JB 1E 104K-T | B | 18.2/62.8 |
| C430 | 4030011600 | S.CER C1608 JB 1E 104K-T | B | 9.7/81.5 |
| C431 | 4030011600 | S.CER C1608 JB 1E 104K-T | B | 12.3/72.4 |
| C432 | 4030011600 | S.CER C1608 JB 1E 104K-T | B | 12.3/79 |
| C433 | 4030011600 | S.CER C1608 JB 1E 104K-T | B | 12.3/82.2 |
| C434 | 4030011600 | S.CER C1608 JB 1E 104K-T | B | 17.2/90.2 |
| C435 | 4030011600 | S.CER C1608 JB 1E 104K-T | B | 20.8/90.2 |
| C436 | 4030011600 | S.CER C1608 JB 1E 104K-T | B | 25.7/90.2 |
| C437 | 4030011600 | S.CER C1608 JB 1E 104K-T | B | 146.1/21.2 |
| C438 | 4030011600 | S.CER C1608 JB 1E 104K-T | B | 152.6/21.2 |
| C439 | 4030011600 | S.CER C1608 JB 1E 104K-T | B | 153/18.4 |
| C440 | 4010008500 | CER DEBB33D102KA2B | | |
| C601 | 4030011600 | S.CER C1608 JB 1E 104K-T | B | 169.4/51.4 |
| C602 | 4030011600 | S.CER C1608 JB 1E 104K-T | B | 169.1/57.7 |
| C603 | 4030011600 | S.CER C1608 JB 1E 104K-T | B | 79.6/44.7 |
| C604 | 4030011600 | S.CER C1608 JB 1E 104K-T | B | 99.9/36.7 |
| C605 | 4030011600 | S.CER C1608 JB 1E 104K-T | B | 102/21.3 |
| C606 | 4030011600 | S.CER C1608 JB 1E 104K-T | B | 83.2/16.8 |
| C607 | 4030011600 | S.CER C1608 JB 1E 104K-T | B | 81.5/16.8 |
| C608 | 4510008540 | S.ELE EEE1CA100SR | T | 67/16.3 |
| C609 | 4510008540 | S.ELE EEE1CA100SR | T | 62.4/34 |
| C610 | 4030006900 | S.CER C1608 JB 1H 103K-T | B | 71.2/19.5 |
| C611 | 4030006900 | S.CER C1608 JB 1H 103K-T | B | 71.2/20.8 |
| C612 | 4030007010 | S.CER C1608 CH 1H 100D-T | T | 80.9/16.9 |
| C613 | 4030007010 | S.CER C1608 CH 1H 100D-T | T | 83.5/16.9 |
| C614 | 4030011600 | S.CER C1608 JB 1E 104K-T | B | 86.2/14.2 |
| C615 | 4030006880 | S.CER C1608 JB 1H 472K-T | B | 71.2/31.2 |
| C616 | 4030006880 | S.CER C1608 JB 1H 472K-T | B | 71.2/29.9 |
| C617 | 4030006880 | S.CER C1608 JB 1H 472K-T | B | 71.2/28.6 |
| C618 | 4030006880 | S.CER C1608 JB 1H 472K-T | B | 71.2/27.3 |
| C619 | 4030006880 | S.CER C1608 JB 1H 472K-T | B | 71.2/26 |
| C620 | 4030006880 | S.CER C1608 JB 1H 472K-T | B | 71.2/24.7 |
| C621 | 4030006880 | S.CER C1608 JB 1H 472K-T | B | 71.2/23.4 |

M.=Mounted side (T: Mounted on the Top side, B: Mounted on the Bottom side)
S.=Surface mount

## [LOGIC UNIT]

| REF NO. | PARTS NO. | DESCRIPTION | M. | H/V LOCATION |
|---|---|---|---|---|
| C622 | 4030006880 | S.CER C1608 JB 1H 472K-T | B | 71.2/22.1 |
| C623 | 4510008540 | S.ELE EEE1CA100SR | T | 178.6/62.5 |
| C624 | 4030011600 | S.CER C1608 JB 1E 104K-T | T | 174.9/60.6 |
| C625 | 4510008540 | S.ELE EEE1CA100SR | T | 184.7/62.5 |
| C626 | 4030011600 | S.CER C1608 JB 1E 104K-T | B | 63.7/20.3 |
| C627 | 4030011600 | S.CER C1608 JB 1E 104K-T | B | 60/20.3 |
| C628 | 4030011600 | S.CER C1608 JB 1E 104K-T | B | 73.6/39 |
| C629 | 4030011600 | S.CER C1608 JB 1E 104K-T | B | 57.2/39.8 |
| C630 | 4030011600 | S.CER C1608 JB 1E 104K-T | B | 150.9/51.7 |
| C631 | 4030011600 | S.CER C1608 JB 1E 104K-T | B | 148.9/48.1 |
| C632 | 4030011600 | S.CER C1608 JB 1E 104K-T | B | 131.8/66 |
| C633 | 4030011600 | S.CER C1608 JB 1E 104K-T | B | 138.2/66.7 |
| C634 | 4030011600 | S.CER C1608 JB 1E 104K-T | B | 150.9/58 |
| C635 | 4030011600 | S.CER C1608 JB 1E 104K-T | B | 131.1/58.5 |
| C636 | 4030011600 | S.CER C1608 JB 1E 104K-T | B | 131.1/52.1 |
| C801 | 4510008540 | S.ELE EEE1CA100SR | T | 141/114.6 |
| C802 | 4030011600 | S.CER C1608 JB 1E 104K-T | B | 138.5/110.6 |
| C803 | 4030011600 | S.CER C1608 JB 1E 104K-T | B | 138.5/113.3 |
| C804 | 4510008520 | S.ELE EEE1CA470SP | T | 147.2/113.8 |
| C805 | 4510008870 | S.ELE EEE1AA471UP | T | 100.2/110.4 |
| C806 | 4510008870 | S.ELE EEE1AA471UP | T | 109.5/110.4 |
| C807 | 4510008870 | S.ELE EEE1AA471UP | T | 119.4/100.6 |
| C808 | 4510008870 | S.ELE EEE1AA471UP | T | 119.9/109.6 |
| C809 | 4510008560 | S.ELE EEE1HAR47SR | T | 160/65.3 |
| C810 | 4510008560 | S.ELE EEE1HAR47SR | T | 166.6/65.3 |
| C811 | 4510008560 | S.ELE EEE1HAR47SR | T | 173.2/65.3 |
| C812 | 4030006860 | S.CER C1608 JB 1H 102K-T | B | 66.8/117.7 |
| C813 | 4030006860 | S.CER C1608 JB 1H 102K-T | B | 84.9/122.3 |
| C814 | 4030006860 | S.CER C1608 JB 1H 102K-T | B | 83.6/116.9 |
| C815 | 4030006860 | S.CER C1608 JB 1H 102K-T | T | 88.8/115.9 |
| C816 | 4030006860 | S.CER C1608 JB 1H 102K-T | B | 97.3/121.4 |
| C817 | 4030006860 | S.CER C1608 JB 1H 102K-T | B | 100.6/122.1 |
| C818 | 4030006860 | S.CER C1608 JB 1H 102K-T | B | 103.1/122.1 |
| C819 | 4030006860 | S.CER C1608 JB 1H 102K-T | B | 105.6/122.1 |
| C820 | 4030006860 | S.CER C1608 JB 1H 102K-T | B | 108.8/121.4 |
| C821 | 4510008520 | S.ELE EEE1CA470SP | T | 211/16 |
| C822 | 4510008500 | S.ELE EEE1CA101WP | T | 14.3/109.4 |
| C823 | 4030006880 | S.CER C1608 JB 1H 472K-T | B | 33.9/114.5 |
| C824 | 4030006860 | S.CER C1608 JB 1H 102K-T | T | 20/24.5 |
| C825 | 4030011600 | S.CER C1608 JB 1E 104K-T | B | 20.4/107.6 |
| C826 | 4030006860 | S.CER C1608 JB 1H 102K-T | T | 122.2/118.1 |
| C827 | 4030006860 | S.CER C1608 JB 1H 102K-T | T | 117.6/118.7 |
| C828 | 4030007130 | S.CER C1608 CH 1H 101J-T | T | 118.9/118.7 |
| C829 | 4030006860 | S.CER C1608 JB 1H 102K-T | T | 127.2/116 |
| C830 | 4030007130 | S.CER C1608 CH 1H 101J-T | T | 128.5/116 |
| C831 | 4030006860 | S.CER C1608 JB 1H 102K-T | T | 130.5/115.5 |
| C832 | 4030007130 | S.CER C1608 CH 1H 101J-T | T | 130.5/116.8 |
| C833 | 4030006860 | S.CER C1608 JB 1H 102K-T | T | 133.9/116 |
| C834 | 4030007130 | S.CER C1608 CH 1H 101J-T | T | 132.6/116 |
| C835 | 4030011600 | S.CER C1608 JB 1E 104K-T | T | 127.8/110.6 |
| C836 | 4510008540 | S.ELE EEE1CA100SR | T | 127.8/106 |
| C837 | 4030011600 | S.CER C1608 JB 1E 104K-T | T | 135.7/106.8 |
| C838 | 4510008540 | S.ELE EEE1CA100SR | T | 132.6/106 |
| C850 | 4030011600 | S.CER C1608 JB 1E 104K-T | B | 165/40.9 |
| C851 | 4510008540 | S.ELE EEE1CA100SR | T | 128/31.2 |
| C852 | 4030009490 | S.CER C1608 JB 1H 821K-T | B | 142.1/11.6 |
| C853 | 4030009490 | S.CER C1608 JB 1H 821K-T | B | 142.7/14.9 |
| C855 | 4510008540 | S.ELE EEE1CA100SR | T | 117.7/29.1 |
| C856 | 4030009490 | S.CER C1608 JB 1H 821K-T | B | 134.5/17.2 |
| C857 | 4030009490 | S.CER C1608 JB 1H 821K-T | B | 131.7/19.8 |
| C859 | 4510008540 | S.ELE EEE1CA100SR | T | 123.2/29.1 |
| C860 | 4030009490 | S.CER C1608 JB 1H 821K-T | B | 136.9/7.2 |
| C861 | 4030009490 | S.CER C1608 JB 1H 821K-T | B | 140.8/7.2 |
| C865 | 4510008540 | S.ELE EEE1CA100SR | T | 119.4/22.2 |
| C866 | 4030007160 | S.CER C1608 CH 1H 181J-T | B | 121/5 |
| C867 | 4030009880 | S.CER C1608 JB 1H 682K-T | T | 115.2/17.9 |
| C868 | 4030008880 | S.CER C1608 JB 1H 223K-T | T | 115.2/15.3 |
| C869 | 4510008540 | S.ELE EEE1CA100SR | T | 109.4/16.3 |
| C871 | 4510008540 | S.ELE EEE1CA100SR | T | 104.6/16.2 |
| C873 | 4030011600 | S.CER C1608 JB 1E 104K-T | B | 120.5/8.4 |
| C874 | 4030011600 | S.CER C1608 JB 1E 104K-T | B | 108.9/10.7 |
| C875 | 4510008540 | S.ELE EEE1CA100SR | T | 114.6/22.2 |
| C876 | 4510008540 | S.ELE EEE1CA100SR | T | 119/16.3 |
| C877 | 4030011600 | S.CER C1608 JB 1E 104K-T | B | 137.3/18.5 |
| C878 | 4030011600 | S.CER C1608 JB 1E 104K-T | B | 134.3/7.2 |
| C879 | 4510008540 | S.ELE EEE1CA100SR | T | 124.2/22.2 |
| C880 | 4510008540 | S.ELE EEE1CA100SR | T | 124.2/16.3 |
| C883 | 4510008560 | S.ELE EEE1HAR47SR | T | 184.7/67.3 |
| C884 | 4510008560 | S.ELE EEE1HAR47SR | T | 180.1/71.1 |
| C901 | 4510008540 | S.ELE EEE1CA100SR | T | 183.7/50.9 |
| C902 | 4510008540 | S.ELE EEE1CA100SR | T | 188.9/50.9 |
| C903 | 4030011600 | S.CER C1608 JB 1E 104K-T | B | 186.3/50.2 |
| C904 | 4030011600 | S.CER C1608 JB 1E 104K-T | B | 193.7/57.5 |
| C905 | 4510008540 | S.ELE EEE1CA100SR | T | 188.9/57 |
| C906 | 4510008540 | S.ELE EEE1CA100SR | T | 183.7/57 |
| C907 | 4030006860 | S.CER C1608 JB 1H 102K-T | B | 170.6/40.3 |
| C908 | 4030006860 | S.CER C1608 JB 1H 102K-T | B | 171.6/37.7 |
| C909 | 4030006860 | S.CER C1608 JB 1H 102K-T | B | 173.6/37.7 |
| C910 | 4030006860 | S.CER C1608 JB 1H 102K-T | B | 175.1/28.2 |
| C911 | 4030006860 | S.CER C1608 JB 1H 102K-T | B | 176.1/30.8 |
| C912 | 4030006860 | S.CER C1608 JB 1H 102K-T | B | 177.6/37.7 |
| C913 | 4030006860 | S.CER C1608 JB 1H 102K-T | B | 178.6/40.3 |
| C914 | 4030006860 | S.CER C1608 JB 1H 102K-T | B | 179.6/37.7 |
| C915 | 4030006860 | S.CER C1608 JB 1H 102K-T | B | 180.1/30.8 |
| C916 | 4030006860 | S.CER C1608 JB 1H 102K-T | B | 180.6/40.3 |
| C917 | 4030006860 | S.CER C1608 JB 1H 102K-T | B | 181.1/28.2 |
| C918 | 4030006860 | S.CER C1608 JB 1H 102K-T | B | 182.1/30.8 |
| C919 | 4030006860 | S.CER C1608 JB 1H 102K-T | B | 182.6/40.3 |
| C920 | 4030006860 | S.CER C1608 JB 1H 102K-T | B | 183.1/28.2 |
| C921 | 4030006860 | S.CER C1608 JB 1H 102K-T | B | 183.6/37.7 |
| C922 | 4030006860 | S.CER C1608 JB 1H 102K-T | B | 184.1/30.8 |
| C923 | 4030006860 | S.CER C1608 JB 1H 102K-T | B | 133.7/37.7 |
| C924 | 4030006860 | S.CER C1608 JB 1H 102K-T | B | 134.7/40.3 |
| C925 | 4030006860 | S.CER C1608 JB 1H 102K-T | B | 135.7/37.7 |
| C926 | 4030006860 | S.CER C1608 JB 1H 102K-T | B | 136.2/30.8 |

## [LOGIC UNIT]

| REF NO. | PARTS NO. | DESCRIPTION | M. | H/V LOCATION |
|---|---|---|---|---|
| C927 | 4030006860 | S.CER C1608 JB 1H 102K-T | B | 136.7/40.3 |
| C928 | 4030006860 | S.CER C1608 JB 1H 102K-T | B | 137.2/25.5 |
| C929 | 4030006860 | S.CER C1608 JB 1H 102K-T | B | 137.7/37.7 |
| C930 | 4030006860 | S.CER C1608 JB 1H 102K-T | B | 138.2/28.1 |
| C931 | 4030006860 | S.CER C1608 JB 1H 102K-T | B | 138.7/40.3 |
| C932 | 4030006860 | S.CER C1608 JB 1H 102K-T | B | 139.2/25.5 |
| C933 | 4030006860 | S.CER C1608 JB 1H 102K-T | B | 139.7/37.7 |
| C934 | 4030006860 | S.CER C1608 JB 1H 102K-T | B | 140.2/28.1 |
| C935 | 4030006860 | S.CER C1608 JB 1H 102K-T | B | 140.7/40.3 |
| C936 | 4030006860 | S.CER C1608 JB 1H 102K-T | B | 141.2/25.5 |
| C937 | 4030006860 | S.CER C1608 JB 1H 102K-T | B | 141.7/37.7 |
| C938 | 4030006860 | S.CER C1608 JB 1H 102K-T | B | 142.2/22.9 |
| C939 | 4030006860 | S.CER C1608 JB 1H 102K-T | B | 142.7/40.3 |
| C940 | 4030006860 | S.CER C1608 JB 1H 102K-T | B | 143.2/25.5 |
| C941 | 4030006860 | S.CER C1608 JB 1H 102K-T | B | 144.2/22.9 |
| C942 | 4030006860 | S.CER C1608 JB 1H 102K-T | B | 146.2/30.8 |
| C943 | 4030006860 | S.CER C1608 JB 1H 102K-T | B | 147.2/28.3 |
| C944 | 4030006860 | S.CER C1608 JB 1H 102K-T | B | 148.2/30.9 |
| C945 | 4030006860 | S.CER C1608 JB 1H 102K-T | B | 150.2/28.3 |
| C946 | 4030006860 | S.CER C1608 JB 1H 102K-T | B | 151.2/30.9 |
| C947 | 4030006860 | S.CER C1608 JB 1H 102K-T | B | 214.5/84.7 |
| C948 | 4030006860 | S.CER C1608 JB 1H 102K-T | B | 220.6/81.7 |
| C949 | 4030006860 | S.CER C1608 JB 1H 102K-T | B | 223/91.7 |
| C950 | 4030006860 | S.CER C1608 JB 1H 102K-T | B | 220.6/94.3 |
| C951 | 4030006860 | S.CER C1608 JB 1H 102K-T | B | 214.5/92.7 |
| C952 | 4030006860 | S.CER C1608 JB 1H 102K-T | B | 213.6/72.3 |
| C953 | 4030006860 | S.CER C1608 JB 1H 102K-T | B | 211.5/76.1 |
| C954 | 4030006860 | S.CER C1608 JB 1H 102K-T | B | 205.7/77.8 |
| C955 | 4030006860 | S.CER C1608 JB 1H 102K-T | B | 211.5/79.5 |
| C956 | 4030006860 | S.CER C1608 JB 1H 102K-T | T | 21/113.9 |
| C957 | 4030006860 | S.CER C1608 JB 1H 102K-T | T | 24/113.9 |
| C958 | 4030006860 | S.CER C1608 JB 1H 102K-T | T | 27/113.9 |
| C959 | 4030006860 | S.CER C1608 JB 1H 102K-T | T | 30/113.8 |
| C960 | 4030006860 | S.CER C1608 JB 1H 102K-T | B | 180.6/79.6 |
| C961 | 4030006860 | S.CER C1608 JB 1H 102K-T | B | 183.2/90.3 |
| C962 | 4030006860 | S.CER C1608 JB 1H 102K-T | B | 187.7/90.3 |
| C963 | 4030006860 | S.CER C1608 JB 1H 102K-T | B | 188.7/81.7 |
| C964 | 4030006860 | S.CER C1608 JB 1H 102K-T | B | 193/81.7 |
| C965 | 4030006860 | S.CER C1608 JB 1H 102K-T | B | 193.7/90.3 |
| C966 | 4030006860 | S.CER C1608 JB 1H 102K-T | B | 194.9/78.8 |
| C967 | 4030006860 | S.CER C1608 JB 1H 102K-T | B | 222.7/78.7 |
| C968 | 4030006860 | S.CER C1608 JB 1H 102K-T | B | 228.7/79 |
| C969 | 4030006860 | S.CER C1608 JB 1H 102K-T | B | 222/74.4 |
| C970 | 4030006860 | S.CER C1608 JB 1H 102K-T | B | 229.9/74.4 |
| C971 | 4030006860 | S.CER C1608 JB 1H 102K-T | B | 220.9/49.2 |
| C972 | 4030006860 | S.CER C1608 JB 1H 102K-T | B | 229.5/50.2 |
| C973 | 4030006860 | S.CER C1608 JB 1H 102K-T | B | 227.1/62.2 |
| C974 | 4030006860 | S.CER C1608 JB 1H 102K-T | B | 218.4/63.2 |
| C975 | 4030006860 | S.CER C1608 JB 1H 102K-T | B | 227.1/66.7 |
| C976 | 4030006860 | S.CER C1608 JB 1H 102K-T | B | 218.4/68.1 |
| C977 | 4030006860 | S.CER C1608 JB 1H 102K-T | T | 181.7/23.9 |
| C978 | 4030006860 | S.CER C1608 JB 1H 102K-T | T | 159.4/23.6 |
| C979 | 4030006860 | S.CER C1608 JB 1H 102K-T | T | 190.4/18.9 |
| C980 | 4030006860 | S.CER C1608 JB 1H 102K-T | T | 188.7/24.5 |
| C981 | 4030006860 | S.CER C1608 JB 1H 102K-T | T | 166.1/22.6 |
| C982 | 4030006860 | S.CER C1608 JB 1H 102K-T | T | 173.3/42.7 |
| C983 | 4030011600 | S.CER C1608 JB 1E 104K-T | T | 180.7/84.3 |
| C984 | 4030010210 | S.CER C3216 JB 1C 105M-T | B | 198.6/85.6 |
| C985 | 4030011600 | S.CER C1608 JB 1E 104K-T | T | 195.5/83.6 |
| C991 | 4030006880 | S.CER C1608 JB 1H 472K-T | T | 208.4/92 |
| C992 | 4030006880 | S.CER C1608 JB 1H 472K-T | T | 208.4/94 |
| C993 | 4030006880 | S.CER C1608 JB 1H 472K-T | T | 220.2/93 |
| C994 | 4030006880 | S.CER C1608 JB 1H 472K-T | T | 220.2/81.4 |
| C995 | 4030006880 | S.CER C1608 JB 1H 472K-T | T | 208.3/80 |
| C996 | 4030006880 | S.CER C1608 JB 1H 472K-T | T | 220.2/78.6 |
| C997 | 4030006880 | S.CER C1608 JB 1H 472K-T | T | 218.4/73.2 |
| | | | | |
| J1 | 6510022490 | S.CNR AXK5S30045P | T | 40/98 |
| J2 | 6510019870 | S.CNR AXK5S40045P | T | 85/98 |
| J51 | 6910014251 | CNR IMSA-9202B-2-06Z041-PT1 | | |
| J102 | 6510019981 | S.CNR 52808-1671 (1690) | T | 72.5/40 |
| J602 | 6510019971 | S.CNR 52808-1071 | T | 95.5/14.5 |
| J604 | 6510019971 | S.CNR 52808-1071 | T | 72.5/23 |
| J802 | 6510024261 | S.CNR S9B-PH-SM4-TB (LF) (SN) | T | 158.5/5 |
| J803 | 6510024401 | CNR S11B-EH (LF) (SN) | | |
| J804 | 6510024251 | S.CNR S5B-PH-SM4-TB (LF) (SN) | T | 213.2/5 |
| J805 | 6510024111 | S.CNR 52793-2070 (2090) | T | 129.5/123.9 |
| J806 | 6510024131 | S.CNR IMSA-9637S-40Y905 | T | 193/4.7 |
| J807 | 6510024151 | S.CNR 50FY-BMT-TB (LF) (SN) | T | 53.6/22 |
| J808 | 6510022471 | S.CNR 40FLT-SM2-TB (LF) (SN) | T | 175.3/34.3 |
| J809 | 6510022471 | S.CNR 40FLT-SM2-TB (LF) (SN) | T | 143.4/34.3 |
| J810 | 6510022731 | S.CNR S13B-PH-SM4-TB (LF) (SN) | T | 120/7 |
| J811 | 6510021561 | S.CNR 52808-2470 (2490) | T | 214.3/84.5 |
| J812 | 6510020701 | S.CNR 52793-1270 (1290) | T | 19.5/123.9 |
| J813 | 6510020081 | S.CNR 52808-2071 (2090) | T | 189/89.8 |
| J814 | 6510019971 | S.CNR 52808-1071 | T | 229/79.5 |
| J815 | 6510019991 | S.CNR 52808-2271 (2291) | T | 229/58 |
| J816 | 6510019991 | S.CNR 52808-2271 (2291) | T | 171.2/17.5 |
| J820 | 6510003581 | CNR S10B-EH-S (LF) (SN) | | |
| J821 | 6510003551 | CNR S07B-EH-S (LF) (SN) | | |
| J822 | 6510021601 | S.CNR S2B-PH-SM4-TB (LF) (SN) | T | 15.5/18 |
| J823 | 6510021601 | S.CNR S2B-PH-SM4-TB (LF) (SN) | T | 53.8/122.6 |
| J824 | 6510024100 | CNR SC25-02WL | | |
| J825 | 6510019421 | S.CNR B8B-ZR-SM4-TF (LF) (SN) | T | 29.4/20.8 |
| J826 | 6510023801 | S.CNR S4B-ZR-SM4A-TF (LF) (SN) | T | 141.3/4.5 |
| | | | | |
| DS401 | 5040002930 | S.LED SML-512MW T86 | T | 11.9/96.4 |
| DS402 | 5040002930 | S.LED SML-512MW T86 | T | 11.9/94.9 |
| DS403 | 5040002930 | S.LED SML-512MW T86 | T | 11.9/93.1 |
| | | | | |
| S51 | 2260001890 | S.SW SKQDPA | T | 142.6/106.8 |

M.=Mounted side (T: Mounted on the Top side, B: Mounted on the Bottom side)
S.=Surface mount

## [LOGIC UNIT]

| REF NO. | PARTS NO. | DESCRIPTION | M. | H/V LOCATION |
|---|---|---|---|---|
| T401 | 5920000841 | S.TSM H1102NL | T | 150/20 |
| EP101 | 6910013310 | S.BEA MMZ1608D121B | T | 3.6/74.9 |
| EP102 | 6910013310 | S.BEA MMZ1608D121B | T | 10.3/80.5 |
| EP103 | 6910013310 | S.BEA MMZ1608D121B | T | 14.9/80.7 |
| EP201 | 6910012350 | S.BEA MMZ1608Y 102BT | T | 201.5/22.1 |
| EP202 | 6910012350 | S.BEA MMZ1608Y 102BT | T | 198.3/28 |
| EP203 | 6910012350 | S.BEA MMZ1608Y 102BT | T | 83.7/86.4 |
| EP204 | 6910012350 | S.BEA MMZ1608Y 102BT | T | 79.6/72.4 |
| EP401 | 6910013310 | S.BEA MMZ1608D121B | T | 19.4/79.6 |
| EP402 | 6910013310 | S.BEA MMZ1608D121B | T | 17.3/75.6 |
| EP403 | 6910013310 | S.BEA MMZ1608D121B | T | 19.4/82.5 |
| EP801 | 6910013310 | S.BEA MMZ1608D121B | T | 204.4/9.8 |
| EP802 | 6910013310 | S.BEA MMZ1608D121B | T | 202.1/10.6 |
| EP803 | 6910013310 | S.BEA MMZ1608D121B | T | 200.8/10.6 |
| EP804 | 6910013310 | S.BEA MMZ1608D121B | T | 199.5/10.6 |
| EP805 | 6910013310 | S.BEA MMZ1608D121B | B | 201.4/8.2 |
| EP806 | 6910013310 | S.BEA MMZ1608D121B | T | 198.2/10.6 |
| EP807 | 6910013310 | S.BEA MMZ1608D121B | B | 200.1/8.2 |
| EP808 | 6910013310 | S.BEA MMZ1608D121B | T | 196.9/10.6 |
| EP809 | 6910013310 | S.BEA MMZ1608D121B | B | 198.8/8.2 |
| EP810 | 6910013310 | S.BEA MMZ1608D121B | T | 195.6/10.6 |
| EP811 | 6910013310 | S.BEA MMZ1608D121B | B | 197.5/8.2 |
| EP812 | 6910013310 | S.BEA MMZ1608D121B | B | 196.2/8.2 |
| EP813 | 6910013310 | S.BEA MMZ1608D121B | T | 194.3/10.6 |
| EP814 | 6910013310 | S.BEA MMZ1608D121B | T | 193/10.6 |
| EP815 | 6910013310 | S.BEA MMZ1608D121B | T | 191.7/10.9 |
| EP816 | 6910013310 | S.BEA MMZ1608D121B | T | 190.4/11.6 |
| EP817 | 6910013310 | S.BEA MMZ1608D121B | T | 189.1/12.3 |
| EP818 | 6910013310 | S.BEA MMZ1608D121B | T | 187.8/12 |
| EP819 | 6910013310 | S.BEA MMZ1608D121B | T | 186.5/11.6 |
| EP820 | 6910013310 | S.BEA MMZ1608D121B | T | 183.5/10 |
| EP821 | 6910015980 | S.BEA MMZ1608S 181CT-AS | T | 71.1/116.5 |
| EP822 | 6910015980 | S.BEA MMZ1608S 181CT-AS | T | 72.5/116.5 |
| EP826 | 6910012350 | S.BEA MMZ1608Y 102BT | T | 133.2/118.1 |
| EP827 | 6910012350 | S.BEA MMZ1608Y 102BT | B | 137.3/124.5 |
| EP828 | 6910012350 | S.BEA MMZ1608Y 102BT | B | 137.3/123.1 |
| EP829 | 6910012350 | S.BEA MMZ1608Y 102BT | T | 135.2/117.3 |
| EP972 | 6910015970 | S.BEA MMZ1608B 301CT-AS | T | 139/11.1 |
| EP973 | 6910015970 | S.BEA MMZ1608B 301CT-AS | T | 142/11.1 |
| EP996 | 6910015970 | S.BEA MMZ1608B 301CT-AS | B | 188.5/92.1 |
| EP997 | 6910015970 | S.BEA MMZ1608B 301CT-AS | B | 189.5/83.5 |
| EP1001 | 6910015970 | S.BEA MMZ1608B 301CT-AS | B | 193.5/83.5 |
| EP1002 | 6910015970 | S.BEA MMZ1608B 301CT-AS | B | 194.5/92.1 |
| EP1101 | 6910013310 | S.BEA MMZ1608D121B | T | 39.4/13.9 |
| EP1102 | 6910013310 | S.BEA MMZ1608D121B | T | 40.1/16.6 |
| EP1103 | 6910013310 | S.BEA MMZ1608D121B | T | 40.8/13.9 |
| EP1104 | 6910013310 | S.BEA MMZ1608D121B | T | 41.5/16.6 |
| EP1105 | 6910013310 | S.BEA MMZ1608D121B | T | 42.2/13.9 |
| EP1106 | 6910013310 | S.BEA MMZ1608D121B | T | 42.9/16.6 |
| EP1107 | 6910013310 | S.BEA MMZ1608D121B | T | 43.6/13.9 |
| EP1108 | 6910013310 | S.BEA MMZ1608D121B | T | 44.3/16.6 |
| EP1109 | 6910013310 | S.BEA MMZ1608D121B | T | 45/13.9 |
| EP1110 | 6910013310 | S.BEA MMZ1608D121B | T | 45.7/16.6 |
| EP1111 | 6910013310 | S.BEA MMZ1608D121B | T | 46.4/13.9 |
| EP1112 | 6910013310 | S.BEA MMZ1608D121B | T | 47.1/16.6 |
| EP1113 | 6910013310 | S.BEA MMZ1608D121B | T | 47.8/13.9 |
| EP1114 | 6910013310 | S.BEA MMZ1608D121B | T | 48.5/16.6 |
| EP1115 | 6910013310 | S.BEA MMZ1608D121B | T | 49.2/13.9 |
| EP1116 | 6910013310 | S.BEA MMZ1608D121B | T | 49.9/16.6 |
| EP1117 | 6910013310 | S.BEA MMZ1608D121B | T | 50.6/13.9 |
| EP1118 | 6910013310 | S.BEA MMZ1608D121B | T | 51.3/16.6 |
| EP1119 | 6910013310 | S.BEA MMZ1608D121B | T | 52/13.9 |
| EP1120 | 6910013310 | S.BEA MMZ1608D121B | T | 52.7/16.6 |
| EP1121 | 6910013310 | S.BEA MMZ1608D121B | T | 53.4/13.9 |
| EP1122 | 6910013310 | S.BEA MMZ1608D121B | T | 54.1/16.6 |
| EP1123 | 6910013310 | S.BEA MMZ1608D121B | T | 54.8/13.9 |
| EP1124 | 6910013310 | S.BEA MMZ1608D121B | T | 42.8/29.6 |
| EP1125 | 6910013310 | S.BEA MMZ1608D121B | T | 43.5/27 |
| EP1126 | 6910013310 | S.BEA MMZ1608D121B | T | 44.2/29.6 |
| EP1127 | 6910013310 | S.BEA MMZ1608D121B | T | 44.9/27 |
| EP1128 | 6910013310 | S.BEA MMZ1608D121B | T | 45.6/29.6 |
| EP1129 | 6910013310 | S.BEA MMZ1608D121B | T | 46.3/27 |
| EP1130 | 6910013310 | S.BEA MMZ1608D121B | T | 47/29.6 |
| EP1131 | 6910013310 | S.BEA MMZ1608D121B | T | 47.7/27 |
| EP1132 | 6910013310 | S.BEA MMZ1608D121B | T | 48.4/29.6 |
| EP1133 | 6910013310 | S.BEA MMZ1608D121B | T | 49.1/27 |
| EP1134 | 6910013310 | S.BEA MMZ1608D121B | T | 49.8/29.6 |
| EP1135 | 6910013310 | S.BEA MMZ1608D121B | T | 50.5/27 |
| EP1136 | 6910013310 | S.BEA MMZ1608D121B | T | 51.2/29.6 |
| EP1137 | 6910013310 | S.BEA MMZ1608D121B | T | 51.9/27 |
| EP1138 | 6910013310 | S.BEA MMZ1608D121B | T | 52.6/29.6 |
| EP1139 | 6910013310 | S.BEA MMZ1608D121B | T | 53.3/27 |
| EP1140 | 6910013310 | S.BEA MMZ1608D121B | T | 54/29.6 |
| EP1141 | 6910013310 | S.BEA MMZ1608D121B | T | 54.7/27 |
| EP1142 | 6910013310 | S.BEA MMZ1608D121B | T | 55.4/29.6 |
| EP1143 | 6910013310 | S.BEA MMZ1608D121B | T | 56.1/27 |
| EP1144 | 6910013310 | S.BEA MMZ1608D121B | T | 56.8/29.6 |
| EP1145 | 6910013310 | S.BEA MMZ1608D121B | T | 57.5/27 |
| EP1146 | 6910013310 | S.BEA MMZ1608D121B | T | 58.2/29.6 |

## [PA200W UNIT]

| REF NO. | PARTS NO. | DESCRIPTION | M. | H/V LOCATION |
|---|---|---|---|---|
| IC2 | 1180001541 | S.IC TA78L08F (TE12L,F) | T | 58.8/15.1 |
| Q1 | 1520000531 | S.TR 2SB1119S-TD-E | T | 42.8/19.2 |
| Q2 | 1590000680 | S.TR DTC114EUA T106 | T | 45.8/13.5 |
| Q101 | 1560001241 | S.FET RD01MUS1-T113 | T | 5.9/66.4 |
| Q201 | 1590003051 | S.FET PD55003-E | T | 20.5/53.1 |
| Q301 | 1590003350 | S.FET SD2918 | T | 64/45.8 |
| Q401 | 1590003361 | FET SD2931-12 | | |
| Q402 | 1590003361 | FET SD2931-12 | | |
| D1 | 1730000561 | S.ZEN RD2.7M-T2B-A B1 | T | 100.6/22.8 |
| D401 | 1750000271 | S.DIO 1SS301 (TE85L,F) | T | 116.8/99.1 |
| D402 | 1750000271 | S.DIO 1SS301 (TE85L,F) | T | 118.3/35.9 |
| D403 | 1750000271 | S.DIO 1SS301 (TE85L,F) | T | 104/98.3 |
| D404 | 1750000271 | S.DIO 1SS301 (TE85L,F) | T | 104/35.7 |
| L1 | 6200005011 | S.COL NLV25T-100J | T | 14.7/18 |
| L2 | 6200005011 | S.COL NLV25T-100J | T | 14.7/20.5 |
| L3 | 6200005011 | S.COL NLV25T-100J | T | 14.7/23 |
| L6 | 6200005011 | S.COL NLV25T-100J | T | 14.7/25.5 |
| L7 | 6200010881 | S.COL CDRH124NP-330MC | T | 77.3/11 |
| L101 | 6200005131 | S.COL NLC453232T-101K-PF | T | 5.6/59.6 |
| L102 | 6200007220 | S.COL EXCCL4532U1 | T | 6/38.4 |
| L201 | 6180001240 | COL LAL 04NA 820K | | |
| L202 | 6140004350 | COL LR-475 | | |
| L301 | 6200003261 | S.COL NLV32T-101J | T | 46.1/36.4 |
| L303 | 6200001831 | S.COL NLV32T-100J | T | 86.9/26.2 |
| L304 | 2040000490 | COL EXC-ELDR25C | | |
| L305 | 2040000490 | COL EXC-ELDR25C | | |
| L306 | 6140004340 | COL LR-474 | | |
| L307 | 6200001831 | S.COL NLV32T-100J | T | 75.7/100.2 |
| L401 | 6200003261 | S.COL NLV32T-101J | T | 100.4/98.3 |
| L402 | 6200003261 | S.COL NLV32T-101J | T | 100.1/35.8 |
| L403 | 6140002590 | COL LR-296 (TR18X8X8 D12A) | | |
| L404 | 6140000720 | S.COL LR-95 | T | 166.4/67 |
| L501 | 6140002030 | COL LR-230 (SK-10M-15Y 120) | | |
| R1 | 7030003440 | S.RES ERJ3GEYJ 102 V (1 K) | T | 42.8/12.8 |
| R2 | 7030003560 | S.RES ERJ3GEYJ 103 V (10 K) | T | 42.8/14.2 |
| R3 | 7510001740 | TMR DTN-C103F3H-STS-40 | | |
| R4 | 7030000380 | S.RES MCR10EZHJ 1 k | T | 39.7/22.5 |
| R5 | 7030008061 | S.RES ERA3YED 222V (2.2 K) | T | 104.3/23.1 |
| R6 | 7030007210 | S.RES ERA3YEB 102V (1 K) | T | 103.6/16.5 |
| R7 | 7030007210 | S.RES ERA3YEB 102V (1 K) | T | 103.6/17.8 |
| R101 | 7030003370 | S.RES ERJ3GEYJ 271 V (270) | T | 6/87.2 |
| R102 | 7030003220 | S.RES ERJ3GEYJ 150 V (15) | T | 3.9/86.1 |
| R103 | 7030003370 | S.RES ERJ3GEYJ 271 V (270) | T | 6/85 |
| R104 | 7030003360 | S.RES ERJ3GEYJ 221 V (220) | T | 4.8/71.3 |
| R105 | 7030003430 | S.RES ERJ3GEYJ 821 V (820) | T | 6/73.3 |
| R106 | 7030003480 | S.RES ERJ3GEYJ 222 V (2.2 K) | T | 9.2/73.8 |
| R107 | 7030003440 | S.RES ERJ3GEYJ 102 V (1 K) | T | 2.2/64.7 |
| R108 | 7030003200 | S.RES ERJ3GEYJ 100 V (10) | T | 9.2/68.3 |
| R110 | 7030000230 | S.RES MCR10EZHJ 56 (560) | T | 11.3/56.6 |
| R111 | 7030003420 | S.RES ERJ3GEYJ 681 V (680) | T | 13.3/58.6 |
| R112 | 7030003510 | S.RES ERJ3GEYJ 392 V (3.9 K) | T | 12.6/60.6 |
| R113 | 7030003500 | S.RES ERJ3GEYJ 332 V (3.3 K) | T | 6.8/75.2 |
| R115 | 7030003520 | S.RES ERJ3GEYJ 472 V (4.7 K) | T | 13.1/40.8 |
| R117 | 7030003530 | S.RES ERJ3GEYJ 562 V (5.6 K) | T | 7.7/76.5 |
| R118 | 7030003550 | S.RES ERJ3GEYJ 822 V (8.2 K) | T | 11.7/40.8 |
| R119 | 7030008240 | S.RES ERJ12Y0R00U | T | 5/49.6 |
| R201 | 7030004050 | S.RES ERJ3GEYJ 1R0 V (1) | T | 13.8/48.6 |
| R202 | 7030003410 | S.RES ERJ3GEYJ 561 V (560) | T | 23.1/43.1 |
| R203 | 7030010800 | S.RES ERJ1TYJ 2R7U (2.7) | T | 18.4/65.5 |
| R205 | 7030006260 | S.RES ERJ12YJ471U (470) | T | 30.3/55.7 |
| R301 | 7310005210 | TRI VM5CK-PVB 20 k | | |
| R302 | 7030008180 | S.RES ERJ12YJ331U (330) | T | 48.3/40.6 |
| R305 | 7030003530 | S.RES ERJ3GEYJ 562 V (5.6 K) | T | 49.6/43.5 |
| R307 | 7070000830 | RES ERG3SJ 101 (100) | | |
| R309 | 7030010570 | S.RES ERJ1TYJ 4R7U (4.7) | T | 80/45.8 |
| R310 | 7310005200 | TRI VM5CK-PVB 2 k | | |
| R312 | 7070000830 | RES ERG3SJ 101 (100) | | |
| R401 | 7030010960 | S.RES ERJ1TYJ 120U (12) | T | 89.8/90.7 |
| R402 | 7030010960 | S.RES ERJ1TYJ 120U (12) | T | 93.5/90.7 |
| R403 | 7030010960 | S.RES ERJ1TYJ 120U (12) | T | 97.2/90.7 |
| R404 | 7030010960 | S.RES ERJ1TYJ 120U (12) | T | 90.8/43.3 |
| R405 | 7030010960 | S.RES ERJ1TYJ 120U (12) | T | 94.5/43.3 |
| R406 | 7030010960 | S.RES ERJ1TYJ 120U (12) | T | 98.2/43.3 |
| R407 | 7310005230 | TRI VM5CK-PVB 10 k | | |
| R408 | 7030000420 | S.RES MCR10EZHJ 2.2 k | T | 116.3/96 |
| R409 | 7030000420 | S.RES MCR10EZHJ 2.2 k | T | 116.3/38 |
| R410 | 7310005230 | TRI VM5CK-PVB 10 k | | |
| R411 | 7030010520 | S.RES ERJ1TYJ 101U (100) | T | 107.6/93.9 |
| R412 | 7030010520 | S.RES ERJ1TYJ 101U (100) | T | 107.5/40.2 |
| R413 | 7030010520 | S.RES ERJ1TYJ 101U (100) | T | 111.3/93.9 |
| R414 | 7030010520 | S.RES ERJ1TYJ 101U (100) | T | 111.2/40.2 |
| R416 | 7070000890 | RES ERG3SJ 150 (15) | | |
| R418 | 7070001190 | RES ERG3SJ180 (18) | | |
| R420 | 7070000890 | RES ERG3SJ 150 (15) | | |
| R422 | 7070001190 | RES ERG3SJ180 (18) | | |
| R423 | 7030003460 | S.RES ERJ3GEYJ 152 V (1.5 K) | T | 95.9/98.4 |
| R424 | 7030003460 | S.RES ERJ3GEYJ 152 V (1.5 K) | T | 99.4/33.6 |
| R425 | 7310005200 | TRI VM5CK-PVB 2 k | | |
| R426 | 7310005200 | TRI VM5CK-PVB 2 k | | |
| R427 | 7070001200 | RES ERG3SJ100P (10) | | |
| R501 | 7070000890 | RES ERG3SJ 150 (15) | | |
| R502 | 7070000890 | RES ERG3SJ 150 (15) | | |
| R503 | 7030003500 | S.RES ERJ3GEYJ 332 V (3.3 K) | T | 171.8/16.7 |
| R504 | 7030003500 | S.RES ERJ3GEYJ 332 V (3.3 K) | T | 169.9/15.9 |
| R507 | 7030003500 | S.RES ERJ3GEYJ 332 V (3.3 K) | T | 139.1/17.9 |
| R508 | 7030003500 | S.RES ERJ3GEYJ 332 V (3.3 K) | T | 137.3/19.2 |
| R511 | 7070000890 | RES ERG3SJ 150 (15) | | |
| R512 | 7070000890 | RES ERG3SJ 150 (15) | | |
| R513 | 7070001000 | RES ERG3SJ 821 (820) | | |
| R514 | 7070001000 | RES ERG3SJ 821 (820) | | |
| R521 | 7030011160 | S.RES RL7520WT-R010-F | T | 165.2/20.2 |

M.=Mounted side (T: Mounted on the Top side, B: Mounted on the Bottom side)
S.=Surface mount

## [PA200W UNIT]

| REF NO. | PARTS NO. | DESCRIPTION | M. | H/V LOCATION |
|---|---|---|---|---|
| R522 | 7030011160 | S.RES RL7520WT-R010-F | T | 159.6/20.2 |
| R523 | 7030011160 | S.RES RL7520WT-R010-F | T | 154/20.2 |
| C1 | 4030011600 | S.CER C1608 JB 1E 104K-T | T | 18.9/18 |
| C2 | 4030006880 | S.CER C1608 JB 1H 472K-T | T | 18.9/20.5 |
| C3 | 4030006880 | S.CER C1608 JB 1H 472K-T | T | 18.9/23 |
| C6 | 4030006880 | S.CER C1608 JB 1H 472K-T | T | 18.9/25.5 |
| C7 | 4030006900 | S.CER C1608 JB 1H 103K-T | T | 70/6.8 |
| C8 | 4030006880 | S.CER C1608 JB 1H 472K-T | T | 42.8/15.6 |
| C9 | 4030011600 | S.CER C1608 JB 1E 104K-T | T | 57.6/11.4 |
| C10 | 4510008520 | S.ELE EEE1CA470SP | T | 52/15.5 |
| C11 | 4030006900 | S.CER C1608 JB 1H 103K-T | T | 60.4/11.4 |
| C12 | 4510008520 | S.ELE EEE1CA470SP | T | 64.9/15.5 |
| C15 | 4030006880 | S.CER C1608 JB 1H 472K-T | T | 104.3/20.4 |
| C16 | 4030006880 | S.CER C1608 JB 1H 472K-T | T | 103/23.1 |
| C17 | 4510008550 | S.ELE EEE1HA010SR | T | 95.9/22.8 |
| C102 | 4030017810 | S.CER C1608 CH 1H 102J-T | T | 4.1/76.2 |
| C103 | 4030011600 | S.CER C1608 JB 1E 104K-T | T | 9.2/72.5 |
| C104 | 4030011600 | S.CER C1608 JB 1E 104K-T | T | 9.5/75.2 |
| C106 | 4030017320 | S.CER GRM21BB11H104KA01 | T | 2.2/67.7 |
| C107 | 4030011600 | S.CER C1608 JB 1E 104K-T | T | 9.2/70.9 |
| C108 | 4030017810 | S.CER C1608 CH 1H 102J-T | T | 9.2/69.6 |
| C109 | 4030017320 | S.CER GRM21BB11H104KA01L | T | 8.1/62.6 |
| C110 | 4030017810 | S.CER C1608 CH 1H 102J-T | T | 9/64.2 |
| C111 | 4030017810 | S.CER C1608 CH 1H 102J-T | T | 9/56.4 |
| C112 | 4030017320 | S.CER GRM21BB11H104KA01L | T | 8.7/54.8 |
| C113 | 4030011600 | S.CER C1608 JB 1E 104K-T | T | 5.3/102.4 |
| C114 | 4030011600 | S.CER C1608 JB 1E 104K-T | T | 13.9/60.6 |
| C201 | 4030017320 | S.CER GRM21BB11H104KA01L | T | 18.2/43.1 |
| C202 | 4030017810 | S.CER C1608 CH 1H 102J-T | T | 15.7/61.3 |
| C204 | 4030008490 | S.CER C2012 JB 1H 682K-T | T | 31.2/61.6 |
| C206 | 4030008700 | S.CER GRM21BB11H473KA01L | T | 29.3/61.6 |
| C207 | 4030008700 | S.CER GRM21BB11H473KA01L | T | 34.4/36.7 |
| C301 | 4030004760 | S.CER C2012 JF 1H 104Z-T | T | 49.4/45.5 |
| C303 | 4030011600 | S.CER C1608 JB 1E 104K-T | T | 43.4/35.4 |
| C305 | 4030004760 | S.CER C2012 JF 1H 104Z-T | T | 44.4/42.6 |
| C307 | 4030017810 | S.CER C1608 CH 1H 102J-T | T | 39.7/31.7 |
| C309 | 4030011600 | S.CER C1608 JB 1E 104K-T | T | 41.1/31.7 |
| C311 | 4030018750 | S.CER C3225 CH 2J 682K-T | T | 54.1/58.9 |
| C313 | 4030011600 | S.CER C1608 JB 1E 104K-T | T | 89.1/26.9 |
| C314 | 4510008050 | ELE 63 ME 220 CZ | | |
| C317 | 4030018790 | S.CER C3225 JB 2E 104K-T | T | 76.8/34 |
| C318 | 4030011600 | S.CER C1608 JB 1E 104K-T | T | 77.2/96.7 |
| C319 | 4030018790 | S.CER C3225 JB 2E 104K-T | T | 70.4/79 |
| C401 | 4030011790 | S.CER GRM55RF52A684ZD01L | T | 92.4/82.2 |
| C402 | 4030011790 | S.CER GRM55RF52A684ZD01L | T | 92.4/51.8 |
| C403 | 4030011600 | S.CER C1608 JB 1E 104K-T | T | 79.9/100.1 |
| C404 | 4030011600 | S.CER C1608 JB 1E 104K-T | T | 88.6/30.3 |
| C405 | 4030006900 | S.CER C1608 JB 1H 103K-T | T | 79.9/98.8 |
| C406 | 4030006900 | S.CER C1608 JB 1H 103K-T | T | 88.6/31.6 |
| C407 | 4030017810 | S.CER C1608 CH 1H 102J-T | T | 79.9/97.5 |
| C408 | 4030017810 | S.CER C1608 CH 1H 102J-T | T | 88.6/32.9 |
| C409 | 4030018790 | S.CER C3225 JB 2E 104K-T | T | 111.3/100.2 |
| C410 | 4030018790 | S.CER C3225 JB 2E 104K-T | T | 111.2/33.9 |
| C411 | 4030006880 | S.CER C1608 JB 1H 472K-T | T | 114.9/99.1 |
| C412 | 4030006880 | S.CER C1608 JB 1H 472K-T | T | 116.3/35 |
| C413 | 4030011600 | S.CER C1608 JB 1E 104K-T | T | 97.8/99.1 |
| C414 | 4030011600 | S.CER C1608 JB 1E 104K-T | T | 97.4/36.5 |
| C415 | 4030011790 | S.CER GRM55RF52A684ZD01L | T | 102.8/88.8 |
| C416 | 4030011790 | S.CER GRM55RF52A684ZD01L | T | 103.8/49 |
| C417 | 4030018760 | S.CER C4532 CH 2A 104K-T | T | 190.2/82.6 |
| C418 | 4030018760 | S.CER C4532 CH 2A 104K-T | T | 193.9/82.6 |
| C419 | 4030018760 | S.CER C4532 CH 2A 104K-T | T | 190.2/53.4 |
| C420 | 4030018760 | S.CER C4532 CH 2A 104K-T | T | 193.9/53.4 |
| C501 | 4030018790 | S.CER C3225 JB 2E 104K-T | T | 183.8/32 |
| C502 | 4030018780 | S.CER C3225 JB 2J 473K-T | T | 180.4/32 |
| C503 | 4030018770 | S.CER C3216 CH 2J 102J-T | T | 177.3/32 |
| C504 | 4510006830 | ELE 63 ME 470CZ | | |
| C505 | 4510006830 | ELE 63 ME 470CZ | | |
| C506 | 4030006880 | S.CER C1608 JB 1H 472K-T | T | 173.7/15.9 |
| C507 | 4030006880 | S.CER C1608 JB 1H 472K-T | T | 137.2/17 |
| C510 | 4030018790 | S.CER C3225 JB 2E 104K-T | T | 170.2/13.6 |
| C511 | 4030018780 | S.CER C3225 JB 2J 473K-T | T | 170.2/10.6 |
| C512 | 4030018770 | S.CER C3216 CH 2J 102J-T | T | 169.9/7.2 |
| C513 | 4510008050 | ELE 63 ME 220 CZ | | |
| C514 | 4030011790 | S.CER GRM55RF52A684ZD01L | T | 164.8/6.7 |
| C515 | 4030011790 | S.CER GRM55RF52A684ZD01L | T | 148.4/6.6 |
| J1 | 6510007020 | CNR TMP-J01X-V6 | | |
| J2 | 6510022311 | S.CNR B5B-PH-SM4-TB (LF) (SN) | T | 6/23 |
| J5 | 6510020421 | S.CNR S4B-PH-SM4-TB (LF) (SN) | T | 93/4.5 |
| J401 | 6510017920 | CNR 1811P342 | | |
| J402 | 6910001040 | CNR IPS-1136 | | |
| W401 | 9025900670 | WIR 23/05/060/B21/W07 | | |
| W501 | 9040401001 | JMP 74/98/050/X98/X98 | | |
| EP501 | 6910011330 | TER OT-009 M3 | | |
| EP502 | 6910011330 | TER OT-009 M3 | | |
| EP503 | 6910000640 | BEA FSRH090160RN000B | | |

## [DC-DC UNIT]

| REF NO. | PARTS NO. | DESCRIPTION | M. | H/V LOCATION |
|---|---|---|---|---|
| IC21 | 1180002510 | S.REG LM2673S-3.3 | T | 130/20.9 |
| IC41 | 1180002510 | S.REG LM2673S-3.3 | T | 97.6/94.7 |
| IC61 | 1180002520 | S.REG LM2673S-5.0 | T | 97.6/59.8 |
| IC81 | 1180002520 | S.REG LM2673S-5.0 | T | 38/13.5 |
| IC101 | 1180002500 | S.REG LM2673S-ADJ | T | 96.6/26.6 |
| IC121 | 1180002530 | S.REG LM2594M-12 | T | 128.6/69.2 |
| Q141 | 1590003310 | S.TR DTD113ZK T146 | T | 7.8/95.4 |
| D21 | 1750000960 | S.DIO RB081L-20 | T | 125.2/32.8 |
| D41 | 1750000960 | S.DIO RB081L-20 | T | 85.7/88.1 |
| D61 | 1750000960 | S.DIO RB081L-20 | T | 88.6/54.3 |
| D81 | 1750000960 | S.DIO RB081L-20 | T | 31.2/22 |
| D101 | 1750000960 | S.DIO RB081L-20 | T | 87.6/21.9 |
| D121 | 1710000840 | S.DIO 1SR154-400 TE25 | T | 145.3/70.6 |
| D122 | 1750001011 | S.DIO MBRD835LT4G | T | 120.6/82.8 |
| D123 | 1750000960 | S.DIO RB081L-20 | T | 132.6/86.1 |
| D141 | 1750000520 | S.DIO DAN222TL | T | 11.3/94.8 |
| L21 | 6200003950 | S.COL HF50ACC 322513-T | T | 117.9/55.1 |
| L22 | 6200010891 | S.COL CDRH124NP-150MC | T | 115.5/34.2 |
| L23 | 6200010881 | S.COL CDRH124NP-330MC | T | 130/50.7 |
| L41 | 6200009790 | S.COL BLM31PG121SN1 | T | 63.2/81.3 |
| L42 | 6200010891 | S.COL CDRH124NP-150MC | T | 84.7/80.3 |
| L43 | 6200010881 | S.COL CDRH124NP-330MC | T | 68.3/94 |
| L44 | 6200009790 | S.COL BLM31PG121SN1 | T | 63.2/83.6 |
| L61 | 6200003950 | S.COL HF50ACC 322513-T | T | 62.9/46.6 |
| L62 | 6200010901 | S.COL CDRH104RNP-100NC | T | 80.4/45 |
| L63 | 6200010881 | S.COL CDRH124NP-330MC | T | 66.5/58 |
| L81 | 6200003950 | S.COL HF50ACC 322513-T | T | 27.4/47.8 |
| L82 | 6200010901 | S.COL CDRH104RNP-100NC | T | 22.7/32 |
| L83 | 6200010881 | S.COL CDRH124NP-330MC | T | 36.1/43.1 |
| L101 | 6200003950 | S.COL HF50ACC 322513-T | T | 62.9/16.6 |
| L102 | 6200010881 | S.COL CDRH124NP-330MC | T | 84.9/12.1 |
| L103 | 6190001191 | S.COL D10F-#A814AY-101K | T | 65.5/26.6 |
| L121 | 6190001640 | S.COL SLF12555T-101M1R1 | T | 119.3/72.3 |
| L122 | 6190001191 | S.COL D10F-#A814AY-101K | T | 141.6/80.9 |
| L141 | 6200001831 | S.COL NLV32T-100J | T | 10.5/99.4 |
| L142 | 6200010901 | S.COL CDRH104RNP-100NC | T | 97.3/109 |
| R21 | 7030006091 | S.RES ERA3YED 822V (8.2 K) | T | 119.1/19.7 |
| R41 | 7030006091 | S.RES ERA3YED 822V (8.2 K) | T | 98.9/83.8 |
| R61 | 7030006091 | S.RES ERA3YED 822V (8.2 K) | T | 98.8/48.5 |
| R81 | 7030006091 | S.RES ERA3YED 822V (8.2 K) | T | 27/12.2 |
| R101 | 7030009851 | S.RES ERA3YED 271V (270) | T | 102/17.9 |
| R102 | 7030007230 | S.RES ERA3YED 102V (1 K) | T | 102/20.8 |
| R103 | 7030006091 | S.RES ERA3YED 822V (8.2 K) | T | 97.9/15.7 |
| R121 | 7030003640 | S.RES ERJ3GEYJ 473 V (47 K) | T | 133.3/72.6 |
| R122 | 7030003640 | S.RES ERJ3GEYJ 473 V (47 K) | T | 132/71.8 |
| R141 | 7030008190 | S.RES ERJ12YJ330U (33) | T | 14.7/99 |
| C9 | 4510008910 | S.ELE EEEFC1C101P | T | 138.5/69.7 |
| C21 | 4030011600 | S.CER C1608 JB 1E 104K-T | T | 125.3/40.8 |
| C22 | 4510008610 | S.ELE 10SVP150MX | T | 131.1/38.1 |
| C23 | 4030011340 | S.CER C1608 CH 1H 471J-T | T | 119.1/17.1 |
| C24 | 4030004750 | S.CER C2012 JB 1H 103K-T | T | 119.7/23.7 |
| C25 | 4030005110 | S.CER C2012 JB 1E 473K-T | T | 125.3/27.5 |
| C26 | 4550006770 | S.TAN TEESVD2 1C 476M-12R | T | 132.1/30 |
| C27 | 4510008610 | S.ELE 10SVP150MX | T | 115.3/47.4 |
| C41 | 4030011600 | S.CER C1608 JB 1E 104K-T | T | 77.5/89.5 |
| C42 | 4510008610 | S.ELE 10SVP150MX | T | 80.8/95.2 |
| C43 | 4030011340 | S.CER C1608 CH 1H 471J-T | T | 101.4/83.8 |
| C44 | 4030004750 | S.CER C2012 JB 1H 103K-T | T | 94.8/84.1 |
| C45 | 4030005110 | S.CER C2012 JB 1E 473K-T | T | 91.4/90.6 |
| C46 | 4550007140 | S.TAN TEESVD 1C 107M12R | T | 87.6/96.4 |
| C47 | 4510008610 | S.ELE 10SVP150MX | T | 70.5/79.1 |
| C61 | 4030011600 | S.CER C1608 JB 1E 104K-T | T | 81.5/56 |
| C62 | 4510008610 | S.ELE 10SVP150MX | T | 77.3/60.9 |
| C63 | 4030011340 | S.CER C1608 CH 1H 471J-T | T | 101.4/48.5 |
| C64 | 4030004750 | S.CER C2012 JB 1H 103K-T | T | 94.8/49.1 |
| C65 | 4030011600 | S.CER C1608 JB 1E 104K-T | T | 91.1/55.4 |
| C66 | 4550006770 | S.TAN TEESVD2 1C 476M-12R | T | 85.6/61.7 |
| C67 | 4510008610 | S.ELE 10SVP150MX | T | 69.6/44 |
| C81 | 4030011600 | S.CER C1608 JB 1E 104K-T | T | 33.1/28.4 |
| C82 | 4510008610 | S.ELE 10SVP150MX | T | 37.9/32.4 |
| C83 | 4030011340 | S.CER C1608 CH 1H 471J-T | T | 26.9/9.7 |
| C84 | 4030004750 | S.CER C2012 JB 1H 103K-T | T | 27.7/16.1 |
| C85 | 4030011600 | S.CER C1608 JB 1E 104K-T | T | 33.4/19.8 |
| C86 | 4550006770 | S.TAN TEESVD2 1C 476M-12R | T | 38/25.1 |
| C87 | 4510008610 | S.ELE 10SVP150MX | T | 21.7/42.7 |
| C101 | 4030011600 | S.CER C1608 JB 1E 104K-T | T | 80.1/22.7 |
| C102 | 4510008610 | S.ELE 10SVP150MX | T | 75.7/27.3 |
| C103 | 4030011340 | S.CER C1608 CH 1H 471J-T | T | 100.4/15.6 |
| C104 | 4030004750 | S.CER C2012 JB 1H 103K-T | T | 93.8/16.2 |
| C105 | 4030005110 | S.CER C2012 JB 1E 473K-T | T | 90.1/22.5 |
| C106 | 4550006770 | S.TAN TEESVD2 1C 476M-12R | T | 83.8/28.2 |
| C107 | 4510008610 | S.ELE 10SVP150MX | T | 68.6/11.3 |
| C122 | 4030011600 | S.CER C1608 JB 1E 104K-T | T | 132/69.2 |
| C123 | 4510008940 | S.ELE EEEFC1V470P | T | 131.7/79.3 |
| C124 | 4030006880 | S.CER C1608 JB 1H 472K-T | T | 120.8/95.1 |
| C141 | 4030011600 | S.CER C1608 JB 1E 104K-T | T | 7.6/97.9 |
| RL142 | 6330001760 | RLY AW3023 | | |
| J2 | 6510003471 | CNR B11B-EH-S (LF) (SN) | | |
| J3 | 6510003431 | CNR B07B-EH-S (LF) (SN) | | |
| J4 | 6510003461 | CNR B10B-EH-S (LF) (SN) | | |
| J5 | 6510020421 | S.CNR S4B-PH-SM4-TB (LF) (SN) | T | 128.2/97.5 |
| W1 | 8900012780 | CBL OPC-1298 | | |

M.=Mounted side (T: Mounted on the Top side, B: Mounted on the Bottom side)
S.=Surface mount

## [CTRL UNIT]

| REF NO. | PARTS NO. | DESCRIPTION | | M. | H/V LOCATION |
|---|---|---|---|---|---|
| IC1 | 1140004120 | S.IC | M38022M2-138FP | T | 65.7/81.8 |
| IC2 | 1130015240 | S.IC | R1EX24016ATA00A | T | 54/86.9 |
| IC3 | 1130003921 | S.IC | TC4S69F (TE85R,F) | T | 55.9/58.2 |
| IC4 | 1180001072 | S.IC | TA7805F NQ | B | 63/57.7 |
| IC5 | 1130009691 | S.IC | TC74HCT7007AF (F) | B | 92.5/91.6 |
| IC6 | 1130006441 | S.IC | TC7S08F (TE85R,F) | T | 81.7/70.3 |
| IC51 | 1130011530 | S.IC | CD74HC4094M96 | T | 42.2/72.4 |
| IC52 | 1130007690 | S.IC | BU4066BCF-E2 | B | 12.5/76.8 |
| IC55 | 1130011530 | S.IC | CD74HC4094M96 | B | 100.2/76.1 |
| IC56 | 1130011530 | S.IC | CD74HC4094M96 | B | 114.3/76.1 |
| IC57 | 1160000131 | S.IC | TD62783AFG (S,EL) | T | 99.6/73.1 |
| IC58 | 1160000131 | S.IC | TD62783AFG (S,EL) | T | 113.7/73.1 |
| IC101 | 1110000960 | S.IC | NJM4558M-TE1-#FMZB | T | 19.4/37.8 |
| IC151 | 1120002301 | S.IC | TC74AC04F (F) | B | 35.3/44.3 |
| IC153 | 1130012011 | S.IC | TC7SZ32F (TE85L,F) | T | 31.2/47.3 |
| IC154 | 1130012011 | S.IC | TC7SZ32F (TE85L,F) | T | 42.4/45.8 |
| IC155 | 1130012011 | S.IC | TC7SZ32F (TE85L,F) | T | 36/47.5 |
| IC156 | 1130012021 | S.IC | TC74ACT112F (EL,F) | T | 38.4/56.5 |
| IC201 | 1110000960 | S.IC | NJM4558M-TE1-#FMZB | T | 19/54.7 |
| IC301 | 1110002690 | S.IC | NJM2903M-TE1-#FMZB | T | 73.4/59 |
| IC401 | 1160000131 | S.IC | TD62783AFG (S,EL) | T | 13.6/86.1 |
| IC402 | 1160000131 | S.IC | TD62783AFG (S,EL) | T | 31.6/84.7 |
| Q1 | 1590001330 | S.TR | DTA114EUA T106 | T | 78.5/75.2 |
| Q2 | 1590000680 | S.TR | DTC114EUA T106 | T | 77.8/71.2 |
| Q3 | 1590000680 | S.TR | DTC114EUA T106 | T | 128.4/74.5 |
| Q4 | 1590000680 | S.TR | DTC114EUA T106 | T | 128.4/77 |
| Q5 | 1590000680 | S.TR | DTC114EUA T106 | T | 128.4/81.3 |
| Q6 | 1590000680 | S.TR | DTC114EUA T106 | T | 128.4/83.8 |
| Q7 | 1590000680 | S.TR | DTC114EUA T106 | T | 128.4/88.5 |
| Q8 | 1590000680 | S.TR | DTC114EUA T106 | T | 128.4/91 |
| Q9 | 1590000680 | S.TR | DTC114EUA T106 | T | 128.4/95.7 |
| Q10 | 1590000680 | S.TR | DTC114EUA T106 | T | 128.4/100.5 |
| Q11 | 1590000680 | S.TR | DTC114EUA T106 | B | 85.7/99.8 |
| Q51 | 1590000680 | S.TR | DTC114EUA T106 | T | 6.1/78.6 |
| Q52 | 1590000680 | S.TR | DTC114EUA T106 | T | 12.5/78.6 |
| Q53 | 1590000680 | S.TR | DTC114EUA T106 | B | 6.6/72.8 |
| Q54 | 1560001260 | S.FET | 2SK3018 T106 | B | 121.2/80.2 |
| Q55 | 1590000680 | S.TR | DTC114EUA T106 | B | 130.2/68.9 |
| Q59 | 1590000680 | S.TR | DTC114EUA T106 | T | 56.8/69.5 |
| Q201 | 1560000871 | S.FET | 2SK515-T1B-A (X33) | T | 52.6/43 |
| Q251 | 1590000680 | S.TR | DTC114EUA T106 | T | 74.2/34.9 |
| D1 | 1730000411 | S.ZEN | RD5.1M-T2B-A B2 | T | 63.4/58.4 |
| D2 | 1710000780 | S.DIO | MA114 (TX) | T | 67.7/55.9 |
| D3 | 1750000201 | S.DIO | 1SS319 (TE85R,F) | B | 129.5/98.1 |
| D4 | 1750000201 | S.DIO | 1SS319 (TE85R,F) | B | 129.5/90 |
| D5 | 1750000201 | S.DIO | 1SS319 (TE85R,F) | B | 129.5/82.8 |
| D6 | 1750000201 | S.DIO | 1SS319 (TE85R,F) | B | 129.5/76 |
| D7 | 1730000031 | S.ZEN | RD5.6M-T2B-A B2 | T | 63.6/54.9 |
| D101 | 1790000491 | S.DIO | HSM88ASTR-E | T | 14.7/24.3 |
| D102 | 1790000491 | S.DIO | HSM88ASTR-E | T | 25.6/29.5 |
| D103 | 1750000201 | S.DIO | 1SS319 (TE85R,F) | T | 19.3/42.1 |
| D151 | 1790000491 | S.DIO | HSM88ASTR-E | T | 32/38.2 |
| D152 | 1790000491 | S.DIO | HSM88ASTR-E | T | 39.4/38.2 |
| D153 | 1790000491 | S.DIO | HSM88ASTR-E | T | 28.4/57.2 |
| D154 | 1790000491 | S.DIO | HSM88ASTR-E | T | 29.6/53.4 |
| D201 | 1790000491 | S.DIO | HSM88ASTR-E | T | 57.6/37.2 |
| D202 | 1790000491 | S.DIO | HSM88ASTR-E | T | 48.5/37.1 |
| D203 | 1750000201 | S.DIO | 1SS319 (TE85R,F) | T | 18/60.9 |
| D251 | 1750000271 | S.DIO | 1SS301 (TE85L,F) | T | 72.1/36.5 |
| D301 | 1790000491 | S.DIO | HSM88ASTR-E | T | 81.5/58.3 |
| D302 | 1790000491 | S.DIO | HSM88ASTR-E | T | 88.4/59.6 |
| X1 | 6050009890 | S.XTL | CR-569 (6.144 MHz) | T | 83.2/79.5 |
| L1 | 6200003261 | S.COL | NLV32T-101J | T | 51.1/76.5 |
| L2 | 6200003261 | S.COL | NLV32T-101J | T | 54.5/77.8 |
| L4 | 2040000490 | COL | EXC-ELDR25C | | |
| L5 | 6200005131 | S.COL | NLC453232T-101K-PF | T | 121.6/100.3 |
| L6 | 6200003590 | S.COL | EXCCL3225U1 | T | 109.3/91.1 |
| L7 | 6200003590 | S.COL | EXCCL3225U1 | T | 106.3/91.2 |
| L8 | 6200003590 | S.COL | EXCCL3225U1 | T | 103.3/91.1 |
| L9 | 6200003950 | S.COL | HF50ACC 322513-T | B | 92/101 |
| L51 | 6200003261 | S.COL | NLV32T-101J | T | 106.3/86.9 |
| L52 | 6200005131 | S.COL | NLC453232T-101K-PF | T | 114.9/88.1 |
| L101 | 6140004410 | COL | LR-502 | | |
| L102 | 6200001831 | S.COL | NLV32T-100J | T | 20.9/66.5 |
| L103 | 6200003261 | S.COL | NLV32T-101J | T | 15.2/66.4 |
| L151 | 6140004410 | COL | LR-502 | | |
| L152 | 6200001831 | S.COL | NLV32T-100J | T | 41.4/63 |
| L201 | 6140004410 | COL | LR-502 | | |
| L202 | 6180003300 | COL | T6-222J (2.2M) | | |
| L301 | 6140004410 | COL | LR-502 | | |
| L302 | 6200003261 | S.COL | NLV32T-101J | B | 69.4/61.2 |
| L401 | 6200003950 | S.COL | HF50ACC 322513-T | T | 26.4/101.5 |
| L402 | 6200003950 | S.COL | HF50ACC 322513-T | T | 18.5/101.5 |
| R2 | 7030003680 | S.RES | ERJ3GEYJ 104 V (100 K) | T | 63/71 |
| R3 | 7030003680 | S.RES | ERJ3GEYJ 104 V (100 K) | T | 64.3/71 |
| R4 | 7030003680 | S.RES | ERJ3GEYJ 104 V (100 K) | T | 65.6/71 |
| R5 | 7030003680 | S.RES | ERJ3GEYJ 104 V (100 K) | T | 66.9/71 |
| R6 | 7030003560 | S.RES | ERJ3GEYJ 103 V (10 K) | T | 74.7/71 |
| R7 | 7030003440 | S.RES | ERJ3GEYJ 102 V (1 K) | T | 73.4/71 |
| R8 | 7030003680 | S.RES | ERJ3GEYJ 104 V (100 K) | T | 55.4/72.8 |
| R9 | 7030003680 | S.RES | ERJ3GEYJ 104 V (100 K) | T | 54.7/74.7 |
| R10 | 7030003680 | S.RES | ERJ3GEYJ 104 V (100 K) | T | 57.3/72.9 |
| R11 | 7030003680 | S.RES | ERJ3GEYJ 104 V (100 K) | T | 53.4/74.7 |
| R12 | 7030003440 | S.RES | ERJ3GEYJ 102 V (1 K) | T | 78.3/83.9 |
| R13 | 7030003680 | S.RES | ERJ3GEYJ 104 V (100 K) | T | 76.6/75.6 |
| R14 | 7030003680 | S.RES | ERJ3GEYJ 104 V (100 K) | T | 78.5/78.2 |
| R15 | 7030003440 | S.RES | ERJ3GEYJ 102 V (1 K) | T | 55.6/60.7 |
| R16 | 7030003320 | S.RES | ERJ3GEYJ 101 V (100) | T | 54.8/55.2 |
| R17 | 7030003560 | S.RES | ERJ3GEYJ 103 V (10 K) | T | 54.1/82.2 |

## [CTRL UNIT]

| REF NO. | PARTS NO. | DESCRIPTION | | M. | H/V LOCATION |
|---|---|---|---|---|---|
| R18 | 7030003560 | S.RES | ERJ3GEYJ 103 V (10 K) | T | 54.1/80.9 |
| R19 | 7030003680 | S.RES | ERJ3GEYJ 104 V (100 K) | T | 58.3/58.2 |
| R20 | 7030003570 | S.RES | ERJ3GEYJ 123 V (12 K) | T | 59.6/60.6 |
| R21 | 7030003650 | S.RES | ERJ3GEYJ 563 V (56 K) | T | 59.6/58.2 |
| R22 | 7030003450 | S.RES | ERJ3GEYJ 122 V (1.2 K) | T | 66.3/58.5 |
| R23 | 7030003560 | S.RES | ERJ3GEYJ 103 V (10 K) | B | 105.1/100 |
| R24 | 7030003440 | S.RES | ERJ3GEYJ 102 V (1 K) | B | 102.9/98.8 |
| R25 | 7030003380 | S.RES | ERJ3GEYJ 331 V (330) | B | 126/99.1 |
| R26 | 7030003380 | S.RES | ERJ3GEYJ 331 V (330) | B | 126/97.1 |
| R27 | 7030003380 | S.RES | ERJ3GEYJ 331 V (330) | B | 126/91 |
| R28 | 7030003380 | S.RES | ERJ3GEYJ 331 V (330) | B | 126/89 |
| R29 | 7030003380 | S.RES | ERJ3GEYJ 331 V (330) | B | 126/83.8 |
| R30 | 7030003380 | S.RES | ERJ3GEYJ 331 V (330) | B | 126/81.8 |
| R31 | 7030003380 | S.RES | ERJ3GEYJ 331 V (330) | B | 126/77 |
| R32 | 7030003380 | S.RES | ERJ3GEYJ 331 V (330) | B | 126/75 |
| R40 | 7030003440 | S.RES | ERJ3GEYJ 102 V (1 K) | T | 61.2/99.9 |
| R42 | 7030003860 | S.RES | ERJ3GE JPW V | T | 60.4/71 |
| R43 | 7030003860 | S.RES | ERJ3GE JPW V | T | 60.7/69 |
| R44 | 7030003860 | S.RES | ERJ3GE JPW V | T | 68.2/71 |
| R45 | 7030003860 | S.RES | ERJ3GE JPW V | T | 65.7/68.5 |
| R46 | 7030003860 | S.RES | ERJ3GE JPW V | T | 70.6/68.9 |
| R51 | 7030003440 | S.RES | ERJ3GEYJ 102 V (1 K) | B | 35.8/80.1 |
| R52 | 7030003440 | S.RES | ERJ3GEYJ 102 V (1 K) | B | 34.3/80.1 |
| R53 | 7030003440 | S.RES | ERJ3GEYJ 102 V (1 K) | B | 32.8/80.1 |
| R54 | 7030003440 | S.RES | ERJ3GEYJ 102 V (1 K) | B | 31.2/80.1 |
| R55 | 7030003440 | S.RES | ERJ3GEYJ 102 V (1 K) | B | 29.6/80.1 |
| R56 | 7030003440 | S.RES | ERJ3GEYJ 102 V (1 K) | B | 28/80.1 |
| R57 | 7030003440 | S.RES | ERJ3GEYJ 102 V (1 K) | B | 26.4/80.1 |
| R58 | 7030003440 | S.RES | ERJ3GEYJ 102 V (1 K) | B | 24.8/80.1 |
| R59 | 7030003440 | S.RES | ERJ3GEYJ 102 V (1 K) | T | 18.3/78.7 |
| R60 | 7030003440 | S.RES | ERJ3GEYJ 102 V (1 K) | T | 17/76 |
| R61 | 7030003440 | S.RES | ERJ3GEYJ 102 V (1 K) | T | 15.7/76 |
| R62 | 7030003440 | S.RES | ERJ3GEYJ 102 V (1 K) | T | 14.4/78.7 |
| R63 | 7030003440 | S.RES | ERJ3GEYJ 102 V (1 K) | T | 10.6/78.7 |
| R64 | 7030003440 | S.RES | ERJ3GEYJ 102 V (1 K) | T | 9.3/74.8 |
| R65 | 7030003440 | S.RES | ERJ3GEYJ 102 V (1 K) | T | 8/74.8 |
| R66 | 7030003520 | S.RES | ERJ3GEYJ 472 V (4.7 K) | B | 15.6/81.6 |
| R67 | 7030003200 | S.RES | ERJ3GEYJ 100 V (10) | T | 99.8/90.4 |
| R68 | 7030003200 | S.RES | ERJ3GEYJ 100 V (10) | T | 98.5/90.4 |
| R69 | 7030003200 | S.RES | ERJ3GEYJ 100 V (10) | T | 97.2/90.4 |
| R70 | 7030004040 | S.RES | ERJ3GEYJ 4R7 V (4.7) | T | 104.8/65.9 |
| R71 | 7030004040 | S.RES | ERJ3GEYJ 4R7 V (4.7) | T | 103.5/65.9 |
| R72 | 7030004040 | S.RES | ERJ3GEYJ 4R7 V (4.7) | T | 102.2/65.9 |
| R73 | 7030004040 | S.RES | ERJ3GEYJ 4R7 V (4.7) | T | 100.9/65.9 |
| R74 | 7030004040 | S.RES | ERJ3GEYJ 4R7 V (4.7) | T | 99.6/65.9 |
| R75 | 7030004040 | S.RES | ERJ3GEYJ 4R7 V (4.7) | T | 98.3/65.9 |
| R76 | 7030004040 | S.RES | ERJ3GEYJ 4R7 V (4.7) | T | 97/65.9 |
| R77 | 7030004040 | S.RES | ERJ3GEYJ 4R7 V (4.7) | T | 95.7/65.9 |
| R78 | 7030004040 | S.RES | ERJ3GEYJ 4R7 V (4.7) | B | 120.1/64.6 |
| R84 | 7030004040 | S.RES | ERJ3GEYJ 4R7 V (4.7) | B | 110.5/64.6 |
| R85 | 7030004040 | S.RES | ERJ3GEYJ 4R7 V (4.7) | B | 108.9/64.6 |
| R86 | 7030003560 | S.RES | ERJ3GEYJ 103 V (10 K) | B | 116.1/83.6 |
| R87 | 7030003860 | S.RES | ERJ3GE JPW V | T | 32.5/76 |
| R88 | 7030003860 | S.RES | ERJ3GE JPW V | T | 31.2/76 |
| R89 | 7030003860 | S.RES | ERJ3GE JPW V | T | 29.9/76 |
| R90 | 7030003860 | S.RES | ERJ3GE JPW V | T | 28.6/76 |
| R91 | 7030003860 | S.RES | ERJ3GE JPW V | T | 27.3/76 |
| R92 | 7030003860 | S.RES | ERJ3GE JPW V | T | 26/76 |
| R95 | 7030003860 | S.RES | ERJ3GE JPW V | T | 15.7/78.7 |
| R97 | 7030003860 | S.RES | ERJ3GE JPW V | T | 8/78.7 |
| R101 | 7030010950 | S.RES | ERJ1TYJ 100U (10) | T | 18.6/29.5 |
| R102 | 7030010950 | S.RES | ERJ1TYJ 100U (10) | T | 22.3/29.5 |
| R103 | 7030003560 | S.RES | ERJ3GEYJ 103 V (10 K) | T | 12.2/34.7 |
| R104 | 7030003560 | S.RES | ERJ3GEYJ 103 V (10 K) | T | 27.6/34.9 |
| R105 | 7030003720 | S.RES | ERJ3GEYJ 224 V (220 K) | T | 12.2/37.3 |
| R106 | 7030003720 | S.RES | ERJ3GEYJ 224 V (220 K) | T | 25/36.7 |
| R107 | 7030003660 | S.RES | ERJ3GEYJ 683 V (68 K) | T | 14.1/36.5 |
| R108 | 7030003660 | S.RES | ERJ3GEYJ 683 V (68 K) | T | 23.2/34.8 |
| R109 | 7030003720 | S.RES | ERJ3GEYJ 224 V (220 K) | T | 13.3/38.7 |
| R110 | 7030003720 | S.RES | ERJ3GEYJ 224 V (220 K) | T | 25/37.9 |
| R111 | 7030009340 | S.RES | ERJ3GEYJ 275V (2.7 M) | T | 13.7/40.6 |
| R112 | 7030003810 | S.RES | ERJ3GEYJ 125 V (1.2 M) | T | 25/39.1 |
| R115 | 7030009340 | S.RES | ERJ3GEYJ 275V (2.7 M) | T | 12.4/40.6 |
| R151 | 7030007190 | S.RES | ERJ12YJ220U (22) | T | 37.6/27.2 |
| R152 | 7030010620 | S.RES | ERJ12YJ180U (18) | B | 38.1/26.8 |
| R153 | 7030007190 | S.RES | ERJ12YJ220U (22) | T | 37.6/31.8 |
| R154 | 7030010620 | S.RES | ERJ12YJ180U (18) | B | 38.1/31.8 |
| R155 | 7030003320 | S.RES | ERJ3GEYJ 101 V (100) | T | 37/39.6 |
| R157 | 7030003320 | S.RES | ERJ3GEYJ 101 V (100) | T | 30.3/40.1 |
| R158 | 7030003560 | S.RES | ERJ3GEYJ 103 V (10 K) | T | 31.8/41.5 |
| R159 | 7030003560 | S.RES | ERJ3GEYJ 103 V (10 K) | T | 38.4/41.5 |
| R160 | 7030003280 | S.RES | ERJ3GEYJ 470 V (47) | T | 30/42.3 |
| R161 | 7030003280 | S.RES | ERJ3GEYJ 470 V (47) | T | 39.7/43 |
| R162 | 7030003440 | S.RES | ERJ3GEYJ 102 V (1 K) | T | 30.9/44.9 |
| R163 | 7030003440 | S.RES | ERJ3GEYJ 102 V (1 K) | T | 42/43.3 |
| R164 | 7030003280 | S.RES | ERJ3GEYJ 470 V (47) | T | 33.6/47.7 |
| R165 | 7030003280 | S.RES | ERJ3GEYJ 470 V (47) | T | 39.2/46.4 |
| R166 | 7030003440 | S.RES | ERJ3GEYJ 102 V (1 K) | T | 34.3/44.7 |
| R167 | 7030003440 | S.RES | ERJ3GEYJ 102 V (1 K) | T | 39.2/45.1 |
| R168 | 7030003280 | S.RES | ERJ3GEYJ 470 V (47) | T | 38.8/49.8 |
| R169 | 7030003440 | S.RES | ERJ3GEYJ 102 V (1 K) | T | 38.8/51.1 |
| R170 | 7030003280 | S.RES | ERJ3GEYJ 470 V (47) | T | 31.5/58.2 |
| R171 | 7030003280 | S.RES | ERJ3GEYJ 470 V (47) | T | 31.5/56.9 |
| R172 | 7030003480 | S.RES | ERJ3GEYJ 222 V (2.2 K) | T | 32/53.7 |
| R173 | 7030003500 | S.RES | ERJ3GEYJ 332 V (3.3 K) | T | 27.2/54.9 |
| R174 | 7030003360 | S.RES | ERJ3GEYJ 221 V (220) | T | 27.2/52.3 |
| R201 | 7030010420 | S.RES | ERJ1TYJ 560U (56) | T | 49/29.7 |
| R202 | 7030010420 | S.RES | ERJ1TYJ 560U (56) | B | 49.3/29.4 |
| R203 | 7030010420 | S.RES | ERJ1TYJ 560U (56) | T | 49/33.7 |
| R204 | 7030010420 | S.RES | ERJ1TYJ 560U (56) | B | 49.3/34 |
| R205 | 7030003560 | S.RES | ERJ3GEYJ 103 V (10 K) | T | 52.3/45.4 |
| R206 | 7030003560 | S.RES | ERJ3GEYJ 103 V (10 K) | T | 57.4/41.5 |
| R207 | 7030003800 | S.RES | ERJ3GEYJ 105 V (1 M) | T | 50.1/41.9 |
| R208 | 7030003560 | S.RES | ERJ3GEYJ 103 V (10 K) | T | 54.8/42.6 |
| R209 | 7030003520 | S.RES | ERJ3GEYJ 472 V (4.7 K) | T | 54.8/40 |

M.=Mounted side (T: Mounted on the Top side, B: Mounted on the Bottom side)
S.=Surface mount

## [CTRL UNIT]

| REF NO. | PARTS NO. | DESCRIPTION | | M. | H/V LOCATION |
|---|---|---|---|---|---|
| R210 | 7030003440 | S.RES | ERJ3GEYJ 102 V (1 K) | T | 56.1/42.7 |
| R211 | 7030003480 | S.RES | ERJ3GEYJ 222 V (2.2 K) | T | 13.1/49.4 |
| R212 | 7030003560 | S.RES | ERJ3GEYJ 103 V (10 K) | T | 25.1/49.4 |
| R213 | 7030005331 | S.RES | ERA3YED 562V (5.6 K) | T | 17.8/49.9 |
| R214 | 7030005331 | S.RES | ERA3YED 562V (5.6 K) | T | 16.5/49.9 |
| R215 | 7030005871 | S.RES | ERA3YKD 104V (100 K) | T | 14/53 |
| R216 | 7030008121 | S.RES | ERA3YED 682V (6.8 K) | T | 20.6/50 |
| R217 | 7030008121 | S.RES | ERA3YED 682V (6.8 K) | T | 22.3/48.1 |
| R218 | 7030005871 | S.RES | ERA3YKD 104V (100 K) | T | 23.8/52 |
| R221 | 7030003670 | S.RES | ERJ3GEYJ 823 V (82 K) | B | 17.1/57 |
| R222 | 7030003680 | S.RES | ERJ3GEYJ 104 V (100 K) | T | 20.9/51.3 |
| R223 | 7030003820 | S.RES | ERJ3GEYJ 155 V (1.5 M) | T | 14/55.8 |
| R224 | 7030003820 | S.RES | ERJ3GEYJ 155 V (1.5 M) | T | 23.8/54.6 |
| R225 | 7030003560 | S.RES | ERJ3GEYJ 103 V (10 K) | T | 14/61.4 |
| R226 | 7030003560 | S.RES | ERJ3GEYJ 103 V (10 K) | T | 21.9/61.4 |
| R227 | 7030003560 | S.RES | ERJ3GEYJ 103 V (10 K) | T | 14.7/63.4 |
| R228 | 7030003560 | S.RES | ERJ3GEYJ 103 V (10 K) | T | 21.3/63.4 |
| R252 | 7030000230 | S.RES | MCR10EZHJ 56 (560) | T | 70.8/31.9 |
| R253 | 7030000230 | S.RES | MCR10EZHJ 56 (560) | T | 69.9/35.2 |
| R254 | 7030000230 | S.RES | MCR10EZHJ 56 (560) | T | 70.8/38.7 |
| R255 | 7030000220 | S.RES | MCR10EZHJ 47 (470) | T | 72.2/40.8 |
| R256 | 7030000230 | S.RES | MCR10EZHJ 56 (560) | T | 72.4/31 |
| R301 | 7030003560 | S.RES | ERJ3GEYJ 103 V (10 K) | T | 83.7/57.6 |
| R302 | 7030003670 | S.RES | ERJ3GEYJ 823 V (82 K) | T | 81.9/61.2 |
| R303 | 7030010910 | S.RES | ERJ1TYJ 150U (15) | B | 90.1/60.7 |
| R304 | 7030003560 | S.RES | ERJ3GEYJ 103 V (10 K) | T | 85.5/62 |
| R305 | 7030003720 | S.RES | ERJ3GEYJ 224 V (220 K) | T | 80.6/61.2 |
| R306 | 7030003660 | S.RES | ERJ3GEYJ 683 V (68 K) | T | 78.7/57.2 |
| R307 | 7030003660 | S.RES | ERJ3GEYJ 683 V (68 K) | T | 79.2/59.7 |
| R308 | 7030003840 | S.RES | ERJ3GEYJ 225 V (2.2 M) | B | 76.5/58.3 |
| R309 | 7030003720 | S.RES | ERJ3GEYJ 224 V (220 K) | T | 76.1/53.9 |
| R310 | 7030003840 | S.RES | ERJ3GEYJ 225 V (2.2 M) | T | 73.4/54 |
| R311 | 7030003440 | S.RES | ERJ3GEYJ 102 V (1 K) | T | 76/55.5 |
| R312 | 7030003560 | S.RES | ERJ3GEYJ 103 V (10 K) | T | 73.4/55.5 |
| R313 | 7030003700 | S.RES | ERJ3GEYJ 154 V (150 K) | T | 78.5/61.6 |
| R345 | 7030003560 | S.RES | ERJ3GEYJ 103 V (10 K) | T | 88.3/83.7 |
| R401 | 7030004040 | S.RES | ERJ3GEYJ 4R7 V (4.7) | T | 17.5/93.4 |
| R402 | 7030004040 | S.RES | ERJ3GEYJ 4R7 V (4.7) | T | 16.2/93.4 |
| R403 | 7030004040 | S.RES | ERJ3GEYJ 4R7 V (4.7) | T | 14.9/93.4 |
| R404 | 7030004040 | S.RES | ERJ3GEYJ 4R7 V (4.7) | T | 13.6/93.4 |
| R405 | 7030004040 | S.RES | ERJ3GEYJ 4R7 V (4.7) | T | 12.3/93.4 |
| R406 | 7030004040 | S.RES | ERJ3GEYJ 4R7 V (4.7) | T | 11/93.4 |
| R407 | 7030004040 | S.RES | ERJ3GEYJ 4R7 V (4.7) | T | 9.7/93.4 |
| R408 | 7030004040 | S.RES | ERJ3GEYJ 4R7 V (4.7) | T | 8.4/93.4 |
| R409 | 7030004040 | S.RES | ERJ3GEYJ 4R7 V (4.7) | B | 36.6/86.7 |
| R410 | 7030004040 | S.RES | ERJ3GEYJ 4R7 V (4.7) | B | 35.1/86.7 |
| R411 | 7030004040 | S.RES | ERJ3GEYJ 4R7 V (4.7) | B | 33.6/86.7 |
| R412 | 7030004040 | S.RES | ERJ3GEYJ 4R7 V (4.7) | B | 32/86.7 |
| R413 | 7030004040 | S.RES | ERJ3GEYJ 4R7 V (4.7) | B | 30.4/86.7 |
| R414 | 7030004040 | S.RES | ERJ3GEYJ 4R7 V (4.7) | B | 28.8/86.7 |
| R415 | 7030004040 | S.RES | ERJ3GEYJ 4R7 V (4.7) | B | 27.2/86.7 |
| R416 | 7030004040 | S.RES | ERJ3GEYJ 4R7 V (4.7) | B | 25.6/86.7 |
| R417 | 7030003440 | S.RES | ERJ3GEYJ 102 V (1 K) | B | 31.3/98.5 |
| R418 | 7030003440 | S.RES | ERJ3GEYJ 102 V (1 K) | B | 44.8/98.5 |
| R419 | 7030003440 | S.RES | ERJ3GEYJ 102 V (1 K) | B | 32.9/98.5 |
| R420 | 7030003440 | S.RES | ERJ3GEYJ 102 V (1 K) | B | 46.4/98.5 |
| R421 | 7030003440 | S.RES | ERJ3GEYJ 102 V (1 K) | B | 34.5/98.5 |
| R422 | 7030003440 | S.RES | ERJ3GEYJ 102 V (1 K) | B | 48/98.5 |
| R423 | 7030003440 | S.RES | ERJ3GEYJ 102 V (1 K) | B | 36.1/98.5 |
| R424 | 7030003440 | S.RES | ERJ3GEYJ 102 V (1 K) | B | 49.6/98.5 |
| R425 | 7030003440 | S.RES | ERJ3GEYJ 102 V (1 K) | B | 37.7/98.5 |
| R426 | 7030003440 | S.RES | ERJ3GEYJ 102 V (1 K) | B | 51.2/98.5 |
| R427 | 7030003440 | S.RES | ERJ3GEYJ 102 V (1 K) | B | 39.3/98.5 |
| R428 | 7030003440 | S.RES | ERJ3GEYJ 102 V (1 K) | B | 52.8/98.5 |
| R429 | 7030003440 | S.RES | ERJ3GEYJ 102 V (1 K) | B | 40.9/98.5 |
| R430 | 7030003440 | S.RES | ERJ3GEYJ 102 V (1 K) | B | 54.4/98.5 |
| R431 | 7030003440 | S.RES | ERJ3GEYJ 102 V (1 K) | B | 42.5/98.5 |
| R432 | 7030003440 | S.RES | ERJ3GEYJ 102 V (1 K) | B | 56/98.5 |
| | | | | | |
| C1 | 4510008540 | S.ELE | EEE1CA100SR | T | 42.6/80.3 |
| C2 | 4030011600 | S.CER | C1608 JB 1E 104K-T | T | 45.8/82.3 |
| C3 | 4030006880 | S.CER | C1608 JB 1H 472K-T | B | 89.5/100 |
| C4 | 4030006900 | S.CER | C1608 JB 1H 103K-T | T | 56/74.7 |
| C5 | 4030006900 | S.CER | C1608 JB 1H 103K-T | T | 58.6/72.9 |
| C6 | 4030006880 | S.CER | C1608 JB 1H 472K-T | T | 74.6/74.7 |
| C7 | 4030017810 | S.CER | C1608 CH 1H 102J-T | T | 75.3/76.6 |
| C8 | 4030011600 | S.CER | C1608 JB 1E 104K-T | T | 56/81.3 |
| C9 | 4030009990 | S.CER | C1608 CH 1H 200J-T | T | 75.3/80.5 |
| C10 | 4030011600 | S.CER | C1608 JB 1E 104K-T | T | 51.7/79.8 |
| C11 | 4030006880 | S.CER | C1608 JB 1H 472K-T | T | 76.6/78.2 |
| C12 | 4030009990 | S.CER | C1608 CH 1H 200J-T | T | 76.6/81.5 |
| C13 | 4510008870 | S.ELE | EEE1AA471UP | T | 48.5/56.6 |
| C14 | 4030011600 | S.CER | C1608 JB 1E 104K-T | T | 60.7/55.3 |
| C15 | 4030011600 | S.CER | C1608 JB 1E 104K-T | T | 67.3/53.7 |
| C16 | 4510008500 | S.ELE | EEE1CA101WP | T | 66.6/48.8 |
| C17 | 4510008550 | S.ELE | EEE1HA010SR | T | 133.3/100.5 |
| C18 | 4510008550 | S.ELE | EEE1HA010SR | T | 133.3/95.7 |
| C19 | 4510008550 | S.ELE | EEE1HA010SR | T | 138.4/91.9 |
| C20 | 4510008550 | S.ELE | EEE1HA010SR | T | 133.3/89.7 |
| C21 | 4510008550 | S.ELE | EEE1HA010SR | T | 138.4/85.3 |
| C22 | 4510008550 | S.ELE | EEE1HA010SR | T | 133.3/83.1 |
| C23 | 4510008550 | S.ELE | EEE1HA010SR | T | 138.4/78.6 |
| C24 | 4510008550 | S.ELE | EEE1HA010SR | T | 133.3/76.5 |
| C25 | 4030011600 | S.CER | C1608 JB 1E 104K-T | T | 53.6/57.7 |
| C26 | 4030006880 | S.CER | C1608 JB 1H 472K-T | T | 61/58.2 |
| C38 | 4030011600 | S.CER | C1608 JB 1E 104K-T | T | 91.3/87.5 |
| C39 | 4510008870 | S.ELE | EEE1AA471UP | T | 57.9/49.8 |
| C40 | 4030011600 | S.CER | C1608 JB 1E 104K-T | T | 84/70.6 |
| C41 | 4030011600 | S.CER | C1608 JB 1E 104K-T | T | 78.5/73.2 |
| C43 | 4030006880 | S.CER | C1608 JB 1H 472K-T | T | 88.8/95.5 |
| C66 | 4510008540 | S.ELE | EEE1CA100SR | T | 106.6/81.6 |
| C68 | 4030011600 | S.CER | C1608 JB 1E 104K-T | B | 103.6/82.8 |
| C69 | 4030011600 | S.CER | C1608 JB 1E 104K-T | T | 118.4/79.9 |
| C70 | 4030011600 | S.CER | C1608 JB 1E 104K-T | T | 95.8/80.5 |

## [CTRL UNIT]

| REF NO. | PARTS NO. | DESCRIPTION | | M. | H/V LOCATION |
|---|---|---|---|---|---|
| C71 | 4030011600 | S.CER | C1608 JB 1E 104K-T | T | 106.9/77.6 |
| C72 | 4510008540 | S.ELE | EEE1CA100SR | T | 111.6/83.3 |
| C88 | 4030011600 | S.CER | C1608 JB 1E 104K-T | B | 7.8/81.8 |
| C102 | 4010005530 | CER | HM60SJ SL 020C 500V | | |
| C103 | 4010005530 | CER | HM60SJ SL 020C 500V | | |
| C104 | 4610002250 | TRI | TZ03R200Y169B00 | | |
| C105 | 4030011540 | S.CER | C1608 CH 1H 750J-T | B | 13.1/28.5 |
| C106 | 4030011540 | S.CER | C1608 CH 1H 750J-T | T | 25.8/33.1 |
| C107 | 4030017810 | S.CER | C1608 CH 1H 102J-T | T | 12.2/36 |
| C108 | 4030017810 | S.CER | C1608 CH 1H 102J-T | T | 25.8/35.5 |
| C109 | 4030006880 | S.CER | C1608 JB 1H 472K-T | B | 21.6/38.4 |
| C110 | 4030006880 | S.CER | C1608 JB 1H 472K-T | B | 18.5/38.4 |
| C111 | 4510008540 | S.ELE | EEE1CA100SR | T | 25.4/45.8 |
| C112 | 4510008540 | S.ELE | EEE1CA100SR | T | 18.8/46.4 |
| C113 | 4030006880 | S.CER | C1608 JB 1H 472K-T | T | 16.3/41.8 |
| C114 | 4030006880 | S.CER | C1608 JB 1H 472K-T | T | 23/41.8 |
| C115 | 4030007100 | S.CER | C1608 CH 1H 560J-T | B | 13.1/26.9 |
| C116 | 4030011540 | S.CER | C1608 CH 1H 750J-T | T | 25.8/34.3 |
| C119 | 4030007100 | S.CER | C1608 CH 1H 560J-T | T | 16.9/24.1 |
| C151 | 4010005540 | CER | HM60SJ SL 030C 500V | | |
| C152 | 4030007070 | S.CER | C1608 CH 1H 330J-T | T | 33/34.3 |
| C153 | 4030007120 | S.CER | C1608 CH 1H 820J-T | T | 32.3/35.6 |
| C154 | 4030007070 | S.CER | C1608 CH 1H 330J-T | T | 38.5/34.5 |
| C155 | 4030007120 | S.CER | C1608 CH 1H 820J-T | T | 35.9/34.5 |
| C156 | 4030006880 | S.CER | C1608 JB 1H 472K-T | T | 29.8/37.5 |
| C157 | 4030006880 | S.CER | C1608 JB 1H 472K-T | T | 41.6/38.4 |
| C158 | 4030007060 | S.CER | C1608 CH 1H 270J-T | T | 29.7/35.6 |
| C159 | 4030006880 | S.CER | C1608 JB 1H 472K-T | T | 34.4/38.4 |
| C161 | 4030006880 | S.CER | C1608 JB 1H 472K-T | T | 45.2/51.5 |
| C162 | 4550003120 | S.TAN | TEESVD2 1A 476M12R | T | 46.7/46.3 |
| C163 | 4030007170 | S.CER | C1608 CH 1H 221J-T | T | 30.1/59.5 |
| C164 | 4030007170 | S.CER | C1608 CH 1H 221J-T | T | 31.5/55.6 |
| C165 | 4030006880 | S.CER | C1608 JB 1H 472K-T | T | 31.5/51.7 |
| C171 | 4030006880 | S.CER | C1608 JB 1H 472K-T | B | 40.2/37.7 |
| C173 | 4030006880 | S.CER | C1608 JB 1H 472K-T | T | 28.3/48.4 |
| C174 | 4030006880 | S.CER | C1608 JB 1H 472K-T | T | 42.2/49.6 |
| C175 | 4030006880 | S.CER | C1608 JB 1H 472K-T | T | 35.9/49.8 |
| C180 | 4030011600 | S.CER | C1608 JB 1E 104K-T | T | 28.3/49.7 |
| C181 | 4030011600 | S.CER | C1608 JB 1E 104K-T | T | 42.2/48.3 |
| C201 | 4010005580 | CER | HM60SJ SL 070D 500V | | |
| C202 | 4010005520 | CER | HM60SJ SL 010C 500V | | |
| C204 | 4030011570 | S.CER | CM105 CH 101G 50AT | T | 55.3/36.9 |
| C205 | 4030016550 | S.CER | CM105 CH 151G 50AT | T | 51.4/36.9 |
| C206 | 4030009530 | S.CER | C1608 CH 1H 030B-T | T | 52.7/36.9 |
| C207 | 4030006880 | S.CER | C1608 JB 1H 472K-T | T | 49.8/39.3 |
| C208 | 4030006880 | S.CER | C1608 JB 1H 472K-T | T | 56.1/40 |
| C209 | 4030017810 | S.CER | C1608 CH 1H 102J-T | T | 51.7/40 |
| C210 | 4030006880 | S.CER | C1608 JB 1H 472K-T | T | 53.5/40 |
| C211 | 4030006880 | S.CER | C1608 JB 1H 472K-T | T | 14.4/49.4 |
| C212 | 4030006880 | S.CER | C1608 JB 1H 472K-T | T | 23.8/49.4 |
| C213 | 4030006880 | S.CER | C1608 JB 1H 472K-T | B | 19.7/55.7 |
| C214 | 4030007170 | S.CER | C1608 CH 1H 221J-T | T | 14.7/59.4 |
| C215 | 4030007170 | S.CER | C1608 CH 1H 221J-T | T | 21.4/59.4 |
| C216 | 4030011340 | S.CER | C1608 CH 1H 471J-T | T | 15.4/61.4 |
| C217 | 4030011340 | S.CER | C1608 CH 1H 471J-T | T | 20.6/61.4 |
| C218 | 4030006880 | S.CER | C1608 JB 1H 472K-T | B | 18.2/54.1 |
| C252 | 4030006880 | S.CER | C1608 JB 1H 472K-T | T | 72.9/33.3 |
| C253 | 4030006880 | S.CER | C1608 JB 1H 472K-T | T | 76.6/38.3 |
| C254 | 4030006880 | S.CER | C1608 JB 1H 472K-T | T | 72.9/48.1 |
| C255 | 4030006880 | S.CER | C1608 JB 1H 472K-T | T | 73/38.2 |
| C301 | 4010005520 | CER | HM60SJ SL 010C 500V | | |
| C302 | 4030007030 | S.CER | C1608 CH 1H 150J-T | T | 85.5/56.6 |
| C303 | 4030007050 | S.CER | C1608 CH 1H 220J-T | T | 85.5/59.2 |
| C304 | 4030017810 | S.CER | C1608 CH 1H 102J-T | T | 83.7/60.5 |
| C305 | 4030017810 | S.CER | C1608 CH 1H 102J-T | T | 90.3/61.3 |
| C307 | 4030006880 | S.CER | C1608 JB 1H 472K-T | T | 78.7/55.8 |
| C308 | 4030006880 | S.CER | C1608 JB 1H 472K-T | T | 77.9/59.7 |
| C309 | 4030011600 | S.CER | C1608 JB 1E 104K-T | T | 68.8/59.8 |
| C310 | 4030009530 | S.CER | C1608 CH 1H 030B-T | T | 85.5/57.9 |
| C417 | 4510008540 | S.ELE | EEE1CA100SR | T | 22.6/77.6 |
| C418 | 4510008540 | S.ELE | EEE1CA100SR | T | 40.6/85.6 |
| C419 | 4030006880 | S.CER | C1608 JB 1H 472K-T | T | 19.6/78.7 |
| C420 | 4030006880 | S.CER | C1608 JB 1H 472K-T | T | 38.4/79.2 |
| | | | | | |
| RL251 | 6330001530 | RLY | NR-HD (5V) AE5349 | | |
| RL252 | 6330001460 | RLY | FTR-F1CA012V | | |
| RL253 | 6330001460 | RLY | FTR-F1CA012V | | |
| | | | | | |
| CP1 | 6910009670 | S.CHK | HK3-S-T | T | 67.7/100.1 |
| CP101 | 6910009670 | S.CHK | HK3-S-T | T | 5/83.4 |
| | | | | | |
| J1 | 6510023771 | S.CNR | 52793-2470 (2490) | T | 101.8/99.6 |
| J2 | 6510023761 | S.CNR | S10B-PH-SM4-TB (LF) (SN) | T | 148.3/82.8 |
| J51 | 6510023771 | S.CNR | 52793-2470 (2490) | T | 43.9/99.6 |
| J52 | 6510022031 | S.CNR | B10B-ZR-SM4-TF (LF) (SN) | T | 133/2.9 |
| J53 | 6510021431 | S.CNR | S8B-ZR-SM4A-TF (LF) (SN) | T | 134.6/65 |
| J101 | 6510017920 | CNR | 1811P342 | | |
| J251 | 6510017920 | CNR | 1811P342 | | |
| J252 | 6510017920 | CNR | 1811P342 | | |
| J301 | 6510017920 | CNR | 1811P342 | | |
| J351 | 6510007020 | CNR | TMP-J01X-V6 | | |
| | | | | | |
| W1 | 9029804001 | WIR | 72/99/040/X98/X98 | | |

M.=Mounted side (T: Mounted on the Top side, B: Mounted on the Bottom side)
S.=Surface mount

## [ANT-SW UNIT]

| REF NO. | PARTS NO. | DESCRIPTION | | M. | H/V LOCATION |
|---|---|---|---|---|---|
| IC11 | 1130011510 | S.IC | BU2099FV-E2 | T | 160.6/33.6 |
| IC12 | 1180002391 | S.REG | S-812C33AMC-C2N-G | T | 152.4/28.7 |
| Q11 | 1590001001 | S.TR | RN2427(RE85R,F) | T | 156.9/38.6 |
| Q12 | 1590001001 | S.TR | RN2427(RE85R,F) | T | 152.3/36.9 |
| Q13 | 1590001001 | S.TR | RN2427(RE85R,F) | T | 164.7/38.5 |
| Q14 | 1590001001 | S.TR | RN2427(RE85R,F) | T | 164.7/17.5 |
| D51 | 1750000550 | S.DIO | 1SS355 TE-17 | T | 161.9/13.3 |
| D52 | 1750000550 | S.DIO | 1SS355 TE-17 | T | 140.3/42.9 |
| D53 | 1750000550 | S.DIO | 1SS355 TE-17 | T | 115.1/41.4 |
| D61 | 1750000550 | S.DIO | 1SS355 TE-17 | T | 118.9/19.7 |
| D62 | 1750000550 | S.DIO | 1SS355 TE-17 | T | 107.1/43 |
| D63 | 1750000550 | S.DIO | 1SS355 TE-17 | T | 79/43.6 |
| D71 | 1750000550 | S.DIO | 1SS355 TE-17 | T | 68.7/21.4 |
| D72 | 1750000550 | S.DIO | 1SS355 TE-17 | T | 61.6/42.9 |
| D73 | 1750000550 | S.DIO | 1SS355 TE-17 | T | 65.8/43.4 |
| D81 | 1750000550 | S.DIO | 1SS355 TE-17 | T | 36.9/19.7 |
| D82 | 1750000550 | S.DIO | 1SS355 TE-17 | T | 41.4/45.2 |
| D83 | 1750000550 | S.DIO | 1SS355 TE-17 | T | 28.2/45.3 |
| D84 | 1750000550 | S.DIO | 1SS355 TE-17 | T | 25.8/43 |
| L1 | 6200003590 | S.COL | EXCCL3225U1 | T | 155.7/27.5 |
| L2 | 6110001670 | COL | LA-253 | | |
| R1 | 7540000100 | ABS | SRYH-350L | | |
| R2 | 7540000130 | ABS | 2P-50A-301 | | |
| R3 | 7540000130 | ABS | 2P-50A-301 | | |
| R11 | 7030003320 | S.RES | ERJ3GEYJ 101 V (100) | T | 165.5/27.4 |
| R12 | 7030003320 | S.RES | ERJ3GEYJ 101 V (100) | T | 164.2/27.4 |
| R13 | 7030003320 | S.RES | ERJ3GEYJ 101 V (100) | T | 162.9/27.4 |
| R14 | 7030003320 | S.RES | ERJ3GEYJ 101 V (100) | T | 166.2/33.9 |
| R15 | 7030003320 | S.RES | ERJ3GEYJ 101 V (100) | T | 148.7/31.6 |
| R16 | 7030003320 | S.RES | ERJ3GEYJ 101 V (100) | T | 151.5/31.6 |
| R17 | 7030003320 | S.RES | ERJ3GEYJ 101 V (100) | T | 154.7/39.4 |
| R18 | 7030003320 | S.RES | ERJ3GEYJ 101 V (100) | T | 151.4/32.9 |
| R19 | 7030003320 | S.RES | ERJ3GEYJ 101 V (100) | T | 151.4/34.2 |
| R20 | 7030003320 | S.RES | ERJ3GEYJ 101 V (100) | T | 152.1/39.1 |
| R21 | 7030003320 | S.RES | ERJ3GEYJ 101 V (100) | T | 154.7/36.6 |
| R22 | 7030003320 | S.RES | ERJ3GEYJ 101 V (100) | T | 166.9/38.7 |
| R23 | 7030003320 | S.RES | ERJ3GEYJ 101 V (100) | T | 162.3/38.9 |
| R24 | 7030003320 | S.RES | ERJ3GEYJ 101 V (100) | T | 161/39.1 |
| R25 | 7030003320 | S.RES | ERJ3GEYJ 101 V (100) | T | 159.7/39.1 |
| R26 | 7030003320 | S.RES | ERJ3GEYJ 101 V (100) | T | 162.7/15.6 |
| C1 | 4010005610 | CER | HM60SJ SL 100D 500V | | |
| C2 | 4010005660 | CER | HM60SJ SL 220J 500V | | |
| C11 | 4030011600 | S.CER | C1608 JB 1E 104K-T | T | 160/27.6 |
| C12 | 4030011600 | S.CER | C1608 JB 1E 104K-T | T | 158.7/27.6 |
| C51 | 4030006880 | S.CER | C1608 JB 1H 472K-T | T | 163.5/13.6 |
| C52 | 4030006880 | S.CER | C1608 JB 1H 472K-T | T | 144.5/41.3 |
| C53 | 4030006880 | S.CER | C1608 JB 1H 472K-T | T | 113.5/41.7 |
| C61 | 4030006880 | S.CER | C1608 JB 1H 472K-T | T | 119.2/21.3 |
| C62 | 4030006880 | S.CER | C1608 JB 1H 472K-T | T | 107.4/44.5 |
| C63 | 4030006880 | S.CER | C1608 JB 1H 472K-T | T | 77.5/43.6 |
| C71 | 4030006880 | S.CER | C1608 JB 1H 472K-T | T | 69/19.9 |
| C72 | 4030006880 | S.CER | C1608 JB 1H 472K-T | T | 61.6/44.5 |
| C73 | 4030006880 | S.CER | C1608 JB 1H 472K-T | T | 73/43.4 |
| C81 | 4030006880 | S.CER | C1608 JB 1H 472K-T | T | 37.2/21.3 |
| C82 | 4030006880 | S.CER | C1608 JB 1H 472K-T | T | 42.9/45.2 |
| C83 | 4030006880 | S.CER | C1608 JB 1H 472K-T | T | 26.6/45.6 |
| C84 | 4030006880 | S.CER | C1608 JB 1H 472K-T | T | 25/45.6 |
| RL51 | 6330001460 | RLY | FTR-F1CA012V | | |
| RL52 | 6330001780 | RLY | FTR-MYAA012D | | |
| RL53 | 6330001780 | RLY | FTR-MYAA012D | | |
| RL61 | 6330001460 | RLY | FTR-F1CA012V | | |
| RL62 | 6330001780 | RLY | FTR-MYAA012D | | |
| RL63 | 6330001780 | RLY | FTR-MYAA012D | | |
| RL71 | 6330001460 | RLY | FTR-F1CA012V | | |
| RL72 | 6330001780 | RLY | FTR-MYAA012D | | |
| RL73 | 6330001780 | RLY | FTR-MYAA012D | | |
| RL81 | 6330001460 | RLY | FTR-F1CA012V | | |
| RL82 | 6330001780 | RLY | FTR-MYAA012D | | |
| RL83 | 6330001780 | RLY | FTR-MYAA012D | | |
| RL84 | 6330001780 | RLY | FTR-MYAA012D | | |
| J1 | 6510017930 | CNR | 1771P145-20 | | |
| J2 | 6510007020 | CNR | TMP-J01X-V6 | | |
| J3 | 6510007020 | CNR | TMP-J01X-V6 | | |
| J4 | 6510019971 | S.CNR | 52808-1071 | T | 153/22 |
| J51 | 6510000410 | CNR | MR-DS-E 02 | | |
| J61 | 6510000410 | CNR | MR-DS-E 02 | | |
| J71 | 6510000410 | CNR | MR-DS-E 02 | | |
| J81 | 6510000410 | CNR | MR-DS-E 02 | | |

## [OSC UNIT]

| REF NO. | PARTS NO. | DESCRIPTION | | M. | H/V LOCATION |
|---|---|---|---|---|---|
| IC10 | 1180002610 | S.REG | BA12FP-E2 | T | 37.8/20 |
| IC91 | 1190002001 | S.IC | AD5260BRUZ50 | T | 26.8/12 |
| IC92 | 1130005721 | S.IC | TC7W04F (TE12L,F) | T | 23.7/6.1 |
| Q10 | 1590000680 | S.TR | DTC114EUA T106 | T | 32.4/35 |
| Q11 | 1590000680 | S.TR | DTC114EUA T106 | T | 22.1/42.4 |
| Q12 | 1590000680 | S.TR | DTC114EUA T106 | T | 29.1/41.5 |
| Q13 | 1590000680 | S.TR | DTC114EUA T106 | T | 31.6/41.5 |
| Q21 | 1530002060 | S.TR | 2SC4081 T106 R | T | 11.3/6.3 |
| Q22 | 1530002601 | S.TR | 2SC4215-O (TE85R,F) | T | 10.4/17.8 |
| Q23 | 1590000680 | S.TR | DTC114EUA T106 | T | 13/11 |
| Q42 | 1530002601 | S.TR | 2SC4215-O (TE85R,F) | T | 18.8/18.8 |
| Q43 | 1590000680 | S.TR | DTC114EUA T106 | T | 19.6/11.7 |
| Q61 | 1530002060 | S.TR | 2SC4081 T106 R | T | 26.1/36.1 |
| Q62 | 1530002060 | S.TR | 2SC4081 T106 R | T | 20.6/38.6 |
| Q70 | 1530002060 | S.TR | 2SC4081 T106 R | T | 9.9/41.2 |
| Q101 | 1530002700 | S.TR | 2SC4097 T106Q | T | 36.7/40 |
| D10 | 1790001250 | S.DIO | MA2S1110G-(TX) | T | 31.4/31.7 |
| D11 | 1790001250 | S.DIO | MA2S1110G-(TX) | T | 16.5/38.2 |
| D71 | 1750000381 | S.DIO | 1SS312 (TE85L,F) | T | 29.8/34.9 |
| D72 | 1750000381 | S.DIO | 1SS312 (TE85L,F) | T | 29.9/37.6 |
| X1 | 6050012210 | XTL | CR-772.OCVXO-148A | | |
| L1 | 6200003950 | S.COL | HF50ACC 322513-T | T | 38.8/43.7 |
| L2 | 6200003950 | S.COL | HF50ACC 322513-T | T | 35.8/43.7 |
| L10 | 6200003950 | S.COL | HF50ACC 322513-T | T | 94.7/30.6 |
| L20 | 6200005491 | S.COL | NLV32T-331J | T | 14.7/1.9 |
| L21 | 6200003261 | S.COL | NLV32T-101J | T | 6.9/11.2 |
| L22 | 6200003261 | S.COL | NLV32T-101J | T | 7.9/14.7 |
| L23 | 6200003041 | S.COL | NLV32T-R68J | T | 6.9/20.3 |
| L24 | 6200003051 | S.COL | NLV32T-R82J | T | 6.2/23.8 |
| L41 | 6200003261 | S.COL | NLV32T-101J | T | 15.3/13.7 |
| L42 | 6200003261 | S.COL | NLV32T-101J | T | 14.7/17.2 |
| L43 | 6200003041 | S.COL | NLV32T-R68J | T | 15.3/22.4 |
| L44 | 6200003051 | S.COL | NLV32T-R82J | T | 18.8/24.2 |
| L61 | 6150004170 | COL | LS-476 | | |
| L62 | 6150004170 | COL | LS-476 | | |
| L91 | 6200003950 | S.COL | HF50ACC 322513-T | T | 23.6/20.3 |
| L92 | 6200003950 | S.COL | HF50ACC 322513-T | T | 19.4/4.3 |
| R1 | 7030003440 | S.RES | ERJ3GEYJ 102 V (1 K) | T | 32.4/44.3 |
| R2 | 7030003440 | S.RES | ERJ3GEYJ 102 V (1 K) | T | 29.8/44.2 |
| R3 | 7030003440 | S.RES | ERJ3GEYJ 102 V (1 K) | T | 25.8/44.2 |
| R11 | 7030003200 | S.RES | ERJ3GEYJ 100 V (10) | T | 33.3/32.3 |
| R12 | 7030003200 | S.RES | ERJ3GEYJ 100 V (10) | T | 16.7/40.3 |
| R13 | 7030003440 | S.RES | ERJ3GEYJ 102 V (1 K) | T | 16.8/11.6 |
| R20 | 7030003240 | S.RES | ERJ3GEYJ 220 V (22) | T | 11.3/1.8 |
| R21 | 7030003560 | S.RES | ERJ3GEYJ 103 V (10 K) | T | 11.1/4.4 |
| R22 | 7030003370 | S.RES | ERJ3GEYJ 271 V (270) | T | 15.5/7.9 |
| R23 | 7030004040 | S.RES | ERJ3GEYJ 4R7 V (4.7) | T | 11.4/14 |
| R24 | 7030003370 | S.RES | ERJ3GEYJ 271 V (270) | T | 12.3/17.7 |
| R25 | 7030003500 | S.RES | ERJ3GEYJ 332 V (3.3 K) | T | 10.1/14.2 |
| R26 | 7030003480 | S.RES | ERJ3GEYJ 222 V (2.2 K) | T | 12.8/9.1 |
| R27 | 7030003360 | S.RES | ERJ3GEYJ 221 V (220) | T | 5.8/13.9 |
| R28 | 7030003440 | S.RES | ERJ3GEYJ 102 V (1 K) | T | 10.2/11.9 |
| R43 | 7030003240 | S.RES | ERJ3GEYJ 220 V (22) | T | 19.7/14.2 |
| R44 | 7030003370 | S.RES | ERJ3GEYJ 271 V (270) | T | 20.7/18.6 |
| R45 | 7030003500 | S.RES | ERJ3GEYJ 332 V (3.3 K) | T | 17.9/15.1 |
| R46 | 7030003480 | S.RES | ERJ3GEYJ 222 V (2.2 K) | T | 19.4/9.8 |
| R47 | 7030003290 | S.RES | ERJ3GEYJ 560 V (56) | T | 16.8/17.9 |
| R61 | 7030003240 | S.RES | ERJ3GEYJ 220 V (22) | T | 22.2/35.4 |
| R62 | 7030003560 | S.RES | ERJ3GEYJ 103 V (10 K) | T | 26.3/34.2 |
| R63 | 7030003380 | S.RES | ERJ3GEYJ 331 V (330) | T | 25.9/38 |
| R64 | 7030003280 | S.RES | ERJ3GEYJ 470 V (47) | T | 20.8/40.5 |
| R65 | 7030003400 | S.RES | ERJ3GEYJ 471 V (470) | T | 20/34.8 |
| R67 | 7030003560 | S.RES | ERJ3GEYJ 103 V (10 K) | T | 19.6/36.7 |
| R68 | 7030003550 | S.RES | ERJ3GEYJ 822 V (8.2 K) | T | 22.2/36.7 |
| R71 | 7030003340 | S.RES | ERJ3GEYJ 151 V (150) | T | 32.6/38.2 |
| R72 | 7030003270 | S.RES | ERJ3GEYJ 390 V (39) | T | 31.2/39.5 |
| R73 | 7030003340 | S.RES | ERJ3GEYJ 151 V (150) | T | 28.6/39.5 |
| R75 | 7030003280 | S.RES | ERJ3GEYJ 470 V (47) | T | 16.2/43.1 |
| R77 | 7030003320 | S.RES | ERJ3GEYJ 101 V (100) | T | 12.5/44.6 |
| R78 | 7030003470 | S.RES | ERJ3GEYJ 182 V (1.8 K) | T | 8/41 |
| R79 | 7030003480 | S.RES | ERJ3GEYJ 222 V (2.2 K) | T | 6.1/41.6 |
| R80 | 7030003360 | S.RES | ERJ3GEYJ 221 V (220) | T | 11.8/41 |
| R82 | 7030003280 | S.RES | ERJ3GEYJ 470 V (47) | T | 17.5/43.1 |
| R91 | 7030006091 | S.RES | ERA3YED 822V (8.2 K) | T | 19.5/7.1 |
| R92 | 7030005341 | S.RES | ERA3YED 332V (3.3 K) | T | 19.5/8.4 |
| R93 | 7030003560 | S.RES | ERJ3GEYJ 103 V (10 K) | T | 25.6/1.4 |
| R94 | 7030003540 | S.RES | ERJ3GEYJ 682 V (6.8 K) | T | 25.6/2.7 |
| R95 | 7030003320 | S.RES | ERJ3GEYJ 101 V (100) | T | 22.4/16.7 |
| R96 | 7030003440 | S.RES | ERJ3GEYJ 102 V (1 K) | T | 32/14.1 |
| R97 | 7030003440 | S.RES | ERJ3GEYJ 102 V (1 K) | T | 28.6/16.1 |
| R98 | 7030003640 | S.RES | ERJ3GEYJ 473 V (47 K) | T | 27.3/16.1 |
| R99 | 7030003480 | S.RES | ERJ3GEYJ 222 V (2.2 K) | T | 22.4/10.1 |
| R100 | 7030003640 | S.RES | ERJ3GEYJ 473 V (47 K) | T | 27.2/6.4 |
| R101 | 7030003360 | S.RES | ERJ3GEYJ 221 V (220) | T | 36.9/38.1 |
| R102 | 7030005981 | S.RES | ERA3YED 333V (33 K) | T | 32.4/6.7 |
| C1 | 4030006880 | S.CER | C1608 JB 1H 472K-T | T | 39.6/47.6 |
| C2 | 4030006880 | S.CER | C1608 JB 1H 472K-T | T | 31.1/44.3 |
| C3 | 4030006880 | S.CER | C1608 JB 1H 472K-T | T | 33.7/44 |
| C4 | 4030006880 | S.CER | C1608 JB 1H 472K-T | T | 30.5/8.6 |
| C5 | 4510008550 | S.ELE | EEE1HA010SR | T | 30.6/2.6 |
| C6 | 4030006880 | S.CER | C1608 JB 1H 472K-T | T | 35/3.4 |
| C7 | 4510008550 | S.ELE | EEE1HA010SR | T | 38.7/2.6 |
| C8 | 4030011600 | S.CER | C1608 JB 1E 104K-T | T | 17.3/2.1 |

M.=Mounted side (T: Mounted on the Top side, B: Mounted on the Bottom side)
S.=Surface mount

## [OSC UNIT]

| REF NO. | PARTS NO. | DESCRIPTION | | M. | H/V LOCATION |
|---|---|---|---|---|---|
| C9 | 4030006880 | S.CER | C1608 JB 1H 472K-T | T | 27.1/43.1 |
| C10 | 4510008680 | S.ELE | EEE1EA220SP | T | 29.7/21.3 |
| C11 | 4030004760 | S.CER | C2012 JF 1H 104Z-T | T | 35.9/13 |
| C12 | 4030006880 | S.CER | C1608 JB 1H 472K-T | T | 39.2/12.8 |
| C13 | 4510008680 | S.ELE | EEE1EA220SP | T | 37.1/8.6 |
| C14 | 4030006880 | S.CER | C1608 JB 1H 472K-T | T | 94.7/33.9 |
| C15 | 4030011600 | S.CER | C1608 JB 1E 104K-T | T | 39.2/14.1 |
| C16 | 4030011600 | S.CER | C1608 JB 1E 104K-T | T | 29.6/32.3 |
| C17 | 4030011600 | S.CER | C1608 JB 1E 104K-T | T | 19.4/41.8 |
| C18 | 4030011600 | S.CER | C1608 JB 1E 104K-T | T | 17.8/38.3 |
| C19 | 4030011600 | S.CER | C1608 JB 1E 104K-T | T | 31.5/33 |
| C20 | 4030011600 | S.CER | C1608 JB 1E 104K-T | T | 13.3/5.2 |
| C21 | 4030011600 | S.CER | C1608 JB 1E 104K-T | T | 11.3/3.1 |
| C22 | 4030011600 | S.CER | C1608 JB 1E 104K-T | T | 15/11 |
| C23 | 4030011600 | S.CER | C1608 JB 1E 104K-T | T | 11.9/15.8 |
| C24 | 4030011600 | S.CER | C1608 JB 1E 104K-T | T | 12.7/14 |
| C25 | 4030011600 | S.CER | C1608 JB 1E 104K-T | T | 10.2/19.8 |
| C26 | 4030017800 | S.CER | C1608 CH 1H 561J-T | T | 10.2/21.1 |
| C27 | 4030007120 | S.CER | C1608 CH 1H 820J-T | T | 7.7/18.2 |
| C28 | 4030011340 | S.CER | C1608 CH 1H 471J-T | T | 8.9/22.5 |
| C29 | 4030011330 | S.CER | C1608 CH 1H 391J-T | T | 10.2/23.8 |
| C30 | 4030007050 | S.CER | C1608 CH 1H 220J-T | T | 8.4/24.5 |
| C31 | 4030017800 | S.CER | C1608 CH 1H 561J-T | T | 10.2/25.1 |
| C32 | 4030011600 | S.CER | C1608 JB 1E 104K-T | T | 10.8/9.2 |
| C33 | 4030011600 | S.CER | C1608 JB 1E 104K-T | T | 9.5/10.1 |
| C42 | 4030011600 | S.CER | C1608 JB 1E 104K-T | T | 21.6/12.7 |
| C43 | 4030011600 | S.CER | C1608 JB 1E 104K-T | T | 20.1/16.8 |
| C44 | 4030011600 | S.CER | C1608 JB 1E 104K-T | T | 19.9/15.5 |
| C45 | 4030011600 | S.CER | C1608 JB 1E 104K-T | T | 13.2/20.6 |
| C46 | 4030017800 | S.CER | C1608 CH 1H 561J-T | T | 15/19.8 |
| C47 | 4030007120 | S.CER | C1608 CH 1H 820J-T | T | 13.2/23.2 |
| C48 | 4030011340 | S.CER | C1608 CH 1H 471J-T | T | 17.5/21.5 |
| C49 | 4030011330 | S.CER | C1608 CH 1H 391J-T | T | 18.8/21.5 |
| C50 | 4030007050 | S.CER | C1608 CH 1H 220J-T | T | 20.6/22.1 |
| C51 | 4030017800 | S.CER | C1608 CH 1H 561J-T | T | 21.7/24.4 |
| C52 | 4030011600 | S.CER | C1608 JB 1E 104K-T | T | 17.6/8.8 |
| C53 | 4030011600 | S.CER | C1608 JB 1E 104K-T | T | 16.3/9.7 |
| C61 | 4030011600 | S.CER | C1608 JB 1E 104K-T | T | 26.3/32.9 |
| C62 | 4030011600 | S.CER | C1608 JB 1E 104K-T | T | 24.1/36.1 |
| C63 | 4030011600 | S.CER | C1608 JB 1E 104K-T | T | 25.9/39.3 |
| C64 | 4030011600 | S.CER | C1608 JB 1E 104K-T | T | 22.7/34.1 |
| C66 | 4030007010 | S.CER | C1608 CH 1H 100D-T | T | 12.8/25.1 |
| C67 | 4030011600 | S.CER | C1608 JB 1E 104K-T | T | 17/35.4 |
| C71 | 4030006880 | S.CER | C1608 JB 1H 472K-T | T | 33.8/39.5 |
| C72 | 4030006880 | S.CER | C1608 JB 1H 472K-T | T | 14.4/45.4 |
| C73 | 4030006880 | S.CER | C1608 JB 1H 472K-T | T | 6.1/40.3 |
| C74 | 4030006880 | S.CER | C1608 JB 1H 472K-T | T | 10/43.2 |
| C75 | 4030006880 | S.CER | C1608 JB 1H 472K-T | T | 13.1/40.9 |
| C76 | 4030006880 | S.CER | C1608 JB 1H 472K-T | T | 19.4/45.4 |
| C77 | 4030011600 | S.CER | C1608 JB 1E 104K-T | T | 10.7/44.6 |
| C91 | 4030006880 | S.CER | C1608 JB 1H 472K-T | T | 25.5/16.4 |
| C92 | 4030006880 | S.CER | C1608 JB 1H 472K-T | T | 17.3/4.7 |
| C93 | 4030006880 | S.CER | C1608 JB 1H 472K-T | T | 22.1/2.7 |
| C94 | 4030006880 | S.CER | C1608 JB 1H 472K-T | T | 27.9/8.6 |
| C101 | 4550006480 | S.TAN | TEESVA 1C 475M8R | T | 40/38.9 |
| | | | | | |
| RL10 | 6330001750 | RLY | FTR-B4CA012Z | | |
| RL11 | 6330001750 | RLY | FTR-B4CA012Z | | |
| | | | | | |
| J2 | 6510019971 | S.CNR | 52808-1071 | T | 30.5/48.8 |
| J71 | 6510007020 | CNR | TMP-J01X-V6 | | |
| J72 | 6510007020 | CNR | TMP-J01X-V6 | | |
| J73 | 6510007020 | CNR | TMP-J01X-V6 | | |

## [DIGISEL UNIT]

| REF NO. | PARTS NO. | DESCRIPTION | | M. | H/V LOCATION |
|---|---|---|---|---|---|
| IC1 | 1130014370 | S.IC | CAT24C256XI | B | 18.9/51.9 |
| IC4 | 1130011510 | S.IC | BU2099FV-E2 | T | 29.9/55.8 |
| IC5 | 1130011510 | S.IC | BU2099FV-E2 | T | 18.5/55.8 |
| IC501 | 1130014370 | S.IC | CAT24C256XI | B | 17.5/26.4 |
| IC504 | 1130011510 | S.IC | BU2099FV-E2 | T | 28.3/29.2 |
| IC505 | 1130011510 | S.IC | BU2099FV-E2 | T | 18.1/29.3 |
| | | | | | |
| Q201 | 1530003851 | S.TR | 2SC5551A-F-E | T | 48.5/52.8 |
| Q701 | 1530003851 | S.TR | 2SC5551A-F-E | T | 49.7/21.3 |
| | | | | | |
| D21 | 1750000550 | S.DIO | 1SS355 TE-17 | B | 28.5/45.9 |
| D51 | 1750000550 | S.DIO | 1SS355 TE-17 | B | 60.7/57.2 |
| D52 | 1750000550 | S.DIO | 1SS355 TE-17 | B | 61.6/44.8 |
| D53 | 1750000550 | S.DIO | 1SS355 TE-17 | T | 53.1/59.2 |
| D54 | 1750000550 | S.DIO | 1SS355 TE-17 | B | 90.2/68.2 |
| D55 | 1750000550 | S.DIO | 1SS355 TE-17 | B | 69.5/68.4 |
| D56 | 1750000550 | S.DIO | 1SS355 TE-17 | B | 67.3/55.1 |
| D57 | 1750000550 | S.DIO | 1SS355 TE-17 | T | 66/48.7 |
| D58 | 1750000550 | S.DIO | 1SS355 TE-17 | B | 114.3/50.2 |
| D59 | 1750000550 | S.DIO | 1SS355 TE-17 | B | 90.5/51 |
| D60 | 1750000550 | S.DIO | 1SS355 TE-17 | B | 90.5/54.4 |
| D61 | 1750000550 | S.DIO | 1SS355 TE-17 | B | 114.3/53.5 |
| D62 | 1750000550 | S.DIO | 1SS355 TE-17 | B | 138.2/50.2 |
| D63 | 1750000550 | S.DIO | 1SS355 TE-17 | B | 138.2/53.7 |
| D64 | 1750000550 | S.DIO | 1SS355 TE-17 | B | 162.1/50.1 |
| D65 | 1750000550 | S.DIO | 1SS355 TE-17 | B | 162.1/53.7 |
| D66 | 1750000550 | S.DIO | 1SS355 TE-17 | B | 180.9/47.7 |
| D67 | 1750000550 | S.DIO | 1SS355 TE-17 | B | 114.3/57.2 |
| D68 | 1750000550 | S.DIO | 1SS355 TE-17 | T | 85.8/64.1 |
| D69 | 1750000550 | S.DIO | 1SS355 TE-17 | B | 183.4/63 |
| D70 | 1750000550 | S.DIO | 1SS355 TE-17 | B | 162.1/61.3 |
| D71 | 1750000550 | S.DIO | 1SS355 TE-17 | B | 162.1/57.5 |
| D72 | 1750000550 | S.DIO | 1SS355 TE-17 | B | 138.2/61.3 |
| D73 | 1750000550 | S.DIO | 1SS355 TE-17 | B | 138.2/57.5 |
| D74 | 1750000550 | S.DIO | 1SS355 TE-17 | B | 114.3/61.4 |
| D75 | 1750000550 | S.DIO | 1SS355 TE-17 | B | 90.5/59.1 |
| D201 | 1710001240 | DIO | L204BBB | | |
| D202 | 1710001240 | DIO | L204BBB | | |
| D203 | 1750000550 | S.DIO | 1SS355 TE-17 | B | 48.3/73.3 |
| D204 | 1750000550 | S.DIO | 1SS355 TE-17 | B | 46.1/73.3 |
| D205 | 1750000550 | S.DIO | 1SS355 TE-17 | B | 44.8/69.7 |
| D521 | 1750000550 | S.DIO | 1SS355 TE-17 | B | 25/35.2 |
| D551 | 1750000550 | S.DIO | 1SS355 TE-17 | B | 63.7/9.2 |
| D552 | 1750000550 | S.DIO | 1SS355 TE-17 | B | 61.7/23 |
| D553 | 1750000550 | S.DIO | 1SS355 TE-17 | B | 58/8.5 |
| D554 | 1750000550 | S.DIO | 1SS355 TE-17 | B | 91/12.8 |
| D555 | 1750000550 | S.DIO | 1SS355 TE-17 | T | 68.6/11.7 |
| D556 | 1750000550 | S.DIO | 1SS355 TE-17 | B | 67.2/24.9 |
| D557 | 1750000550 | S.DIO | 1SS355 TE-17 | B | 70.2/36.4 |
| D558 | 1750000550 | S.DIO | 1SS355 TE-17 | B | 114.3/27.1 |
| D559 | 1750000550 | S.DIO | 1SS355 TE-17 | B | 90.6/26.8 |
| D560 | 1750000550 | S.DIO | 1SS355 TE-17 | B | 90.6/30.3 |
| D561 | 1750000550 | S.DIO | 1SS355 TE-17 | B | 114.3/30.5 |
| D562 | 1750000550 | S.DIO | 1SS355 TE-17 | B | 138.2/27.1 |
| D563 | 1750000550 | S.DIO | 1SS355 TE-17 | B | 138.2/30.5 |
| D564 | 1750000550 | S.DIO | 1SS355 TE-17 | B | 162.1/27.1 |
| D565 | 1750000550 | S.DIO | 1SS355 TE-17 | B | 162.1/30.6 |
| D566 | 1750000550 | S.DIO | 1SS355 TE-17 | B | 182.5/33.5 |
| D567 | 1750000550 | S.DIO | 1SS355 TE-17 | B | 114.3/19.6 |
| D568 | 1750000550 | S.DIO | 1SS355 TE-17 | B | 90.7/19.6 |
| D569 | 1750000550 | S.DIO | 1SS355 TE-17 | B | 183.6/17.1 |
| D570 | 1750000550 | S.DIO | 1SS355 TE-17 | B | 162.1/19.7 |
| D571 | 1750000550 | S.DIO | 1SS355 TE-17 | B | 162.1/23.5 |
| D572 | 1750000550 | S.DIO | 1SS355 TE-17 | B | 138.2/23.5 |
| D573 | 1750000550 | S.DIO | 1SS355 TE-17 | B | 138.2/19.6 |
| D574 | 1750000550 | S.DIO | 1SS355 TE-17 | B | 114.3/23.4 |
| D575 | 1750000550 | S.DIO | 1SS355 TE-17 | B | 90.7/22.9 |
| D701 | 1710001240 | DIO | L204BBB | | |
| D702 | 1710001240 | DIO | L204BBB | | |
| D703 | 1750000550 | S.DIO | 1SS355 TE-17 | B | 47/9 |
| D704 | 1750000550 | S.DIO | 1SS355 TE-17 | B | 44.9/9 |
| D705 | 1750000550 | S.DIO | 1SS355 TE-17 | T | 51.8/34.3 |
| | | | | | |
| L1 | 6200003261 | S.COL | NLV32T-101J | B | 4.5/52 |
| L2 | 6200003950 | S.COL | HF50ACC 322513-T | B | 4.7/40 |
| L3 | 6200003261 | S.COL | NLV32T-101J | B | 4.5/48 |
| L4 | 6200003261 | S.COL | NLV32T-101J | B | 4.5/44 |
| L101 | 6140003980 | COL | LR-476 | | |
| L102 | 6140003990 | COL | LR-477 | | |
| L103 | 6140004001 | COL | LR-478A | | |
| L104 | 6140004010 | COL | LR-479 | | |
| L105 | 6140004020 | COL | LR-480 | | |
| L106 | 6140004030 | COL | LR-481 | | |
| L107 | 6110003930 | COL | LA-595 | | |
| L201 | 6180000920 | COL | LAL 03NA 221K | | |
| L203 | 6140003940 | COL | LR-493 | | |
| L503 | 6200003261 | S.COL | NLV32T-101J | B | 4.5/36 |
| L504 | 6200003261 | S.COL | NLV32T-101J | B | 4.5/32 |
| L601 | 6140003980 | COL | LR-476 | | |
| L602 | 6140003990 | COL | LR-477 | | |
| L603 | 6140004001 | COL | LR-478A | | |
| L604 | 6140004010 | COL | LR-479 | | |
| L605 | 6140004020 | COL | LR-480 | | |
| L606 | 6140004030 | COL | LR-481 | | |
| L607 | 6110003930 | COL | LA-595 | | |
| L701 | 6180000920 | COL | LAL 03NA 221K | | |
| L703 | 6140003940 | COL | LR-493 | | |
| | | | | | |
| R1 | 7030003680 | S.RES | ERJ3GEYJ 104 V (100 K) | B | 17.3/60.8 |
| R2 | 7030003560 | S.RES | ERJ3GEYJ 103 V (10 K) | B | 12.6/54.5 |
| R3 | 7030003560 | S.RES | ERJ3GEYJ 103 V (10 K) | T | 26.1/51.6 |

M.=Mounted side (T: Mounted on the Top side, B: Mounted on the Bottom side)
S.=Surface mount

## [DIGISEL UNIT]

| REF NO. | PARTS NO. | DESCRIPTION | M. | H/V LOCATION |
|---|---|---|---|---|
| R4 | 7030003440 | S.RES ERJ3GEYJ 102 V (1 K) | T | 14.3/47.4 |
| R5 | 7030003440 | S.RES ERJ3GEYJ 102 V (1 K) | T | 15.7/44.8 |
| R6 | 7030003440 | S.RES ERJ3GEYJ 102 V (1 K) | T | 15.1/46.1 |
| R7 | 7030003440 | S.RES ERJ3GEYJ 102 V (1 K) | T | 4/52.9 |
| R8 | 7030003440 | S.RES ERJ3GEYJ 102 V (1 K) | T | 13.3/51.8 |
| R9 | 7030003360 | S.RES ERJ3GEYJ 221 V (220) | B | 32/45.9 |
| R10 | 7030003360 | S.RES ERJ3GEYJ 221 V (220) | T | 34.6/60 |
| R35 | 7030003360 | S.RES ERJ3GEYJ 221 V (220) | T | 27.9/62.4 |
| R36 | 7030003360 | S.RES ERJ3GEYJ 221 V (220) | T | 28.6/65.8 |
| R37 | 7030003360 | S.RES ERJ3GEYJ 221 V (220) | T | 29.3/62.4 |
| R38 | 7030003360 | S.RES ERJ3GEYJ 221 V (220) | T | 30/65.8 |
| R39 | 7030003360 | S.RES ERJ3GEYJ 221 V (220) | T | 30.7/62.4 |
| R40 | 7030003360 | S.RES ERJ3GEYJ 221 V (220) | T | 26.5/62.4 |
| R41 | 7030003360 | S.RES ERJ3GEYJ 221 V (220) | T | 27.2/65.8 |
| R42 | 7030003360 | S.RES ERJ3GEYJ 221 V (220) | T | 25.8/65.8 |
| R43 | 7030003360 | S.RES ERJ3GEYJ 221 V (220) | T | 25.1/62.4 |
| R44 | 7030003360 | S.RES ERJ3GEYJ 221 V (220) | T | 24.4/65.8 |
| R45 | 7030003360 | S.RES ERJ3GEYJ 221 V (220) | T | 23.7/62.4 |
| R46 | 7030003360 | S.RES ERJ3GEYJ 221 V (220) | T | 23/65.8 |
| R47 | 7030003360 | S.RES ERJ3GEYJ 221 V (220) | T | 21.2/62.4 |
| R48 | 7030003360 | S.RES ERJ3GEYJ 221 V (220) | T | 19.1/65.8 |
| R49 | 7030003360 | S.RES ERJ3GEYJ 221 V (220) | T | 18.4/62.4 |
| R50 | 7030003360 | S.RES ERJ3GEYJ 221 V (220) | T | 19.8/62.4 |
| R51 | 7030003360 | S.RES ERJ3GEYJ 221 V (220) | T | 20.5/65.8 |
| R52 | 7030003360 | S.RES ERJ3GEYJ 221 V (220) | T | 15.6/62.4 |
| R53 | 7030003360 | S.RES ERJ3GEYJ 221 V (220) | T | 14.9/65.8 |
| R54 | 7030003360 | S.RES ERJ3GEYJ 221 V (220) | T | 14.2/62.4 |
| R55 | 7030003360 | S.RES ERJ3GEYJ 221 V (220) | T | 16.3/65.8 |
| R56 | 7030003360 | S.RES ERJ3GEYJ 221 V (220) | T | 17/62.4 |
| R57 | 7030003360 | S.RES ERJ3GEYJ 221 V (220) | T | 17.7/65.8 |
| R58 | 7030003360 | S.RES ERJ3GEYJ 221 V (220) | T | 20.9/46.4 |
| R59 | 7030003440 | S.RES ERJ3GEYJ 102 V (1 K) | T | 14.9/49.7 |
| R100 | 7030000010 | S.RES MCR10EZHJ JPW (000) | B | 26/47.3 |
| R104 | 7030003560 | S.RES ERJ3GEYJ 103 V (10 K) | B | 145.1/64.1 |
| R105 | 7030003560 | S.RES ERJ3GEYJ 103 V (10 K) | B | 131.1/62.7 |
| R201 | 7030000380 | S.RES MCR10EZHJ 1 k | B | 49.4/55.6 |
| R202 | 7030000290 | S.RES MCR10EZHJ 180 (181) | B | 49.4/51.8 |
| R203 | 7030000220 | S.RES MCR10EZHJ 47 (470) | B | 49.4/53.7 |
| R204 | 7030003360 | S.RES ERJ3GEYJ 221 V (220) | B | 48.2/69.7 |
| R205 | 7030003350 | S.RES ERJ3GEYJ 181 V (180) | T | 54.5/46.5 |
| R206 | 7030003370 | S.RES ERJ3GEYJ 271 V (270) | B | 49.4/48.7 |
| R207 | 7030003560 | S.RES ERJ3GEYJ 103 V (10 K) | T | 57.6/48.7 |
| R208 | 7030000200 | S.RES MCR10EZHJ 33 (330) | B | 45.4/56.9 |
| R209 | 7030003240 | S.RES ERJ3GEYJ 220 V (22) | T | 44.2/53.9 |
| R210 | 7030003370 | S.RES ERJ3GEYJ 271 V (270) | B | 45.2/49.5 |
| R211 | 7030003370 | S.RES ERJ3GEYJ 271 V (270) | B | 45.2/50.8 |
| R213 | 7030000220 | S.RES MCR10EZHJ 47 (470) | B | 38.1/55.9 |
| R214 | 7030003460 | S.RES ERJ3GEYJ 152 V (1.5 K) | B | 51.6/60 |
| R215 | 7030003460 | S.RES ERJ3GEYJ 152 V (1.5 K) | B | 52.4/58 |
| R216 | 7030003680 | S.RES ERJ3GEYJ 104 V (100 K) | B | 17.3/66.4 |
| R501 | 7030003680 | S.RES ERJ3GEYJ 104 V (100 K) | B | 14.5/21.2 |
| R502 | 7030003560 | S.RES ERJ3GEYJ 103 V (10 K) | B | 25.7/25.3 |
| R503 | 7030003560 | S.RES ERJ3GEYJ 103 V (10 K) | B | 24.4/25.3 |
| R504 | 7030003440 | S.RES ERJ3GEYJ 102 V (1 K) | B | 9.7/44.5 |
| R505 | 7030003440 | S.RES ERJ3GEYJ 102 V (1 K) | T | 9.3/42.5 |
| R506 | 7030003440 | S.RES ERJ3GEYJ 102 V (1 K) | T | 3.7/28.1 |
| R507 | 7030003440 | S.RES ERJ3GEYJ 102 V (1 K) | B | 4.4/28 |
| R508 | 7030003440 | S.RES ERJ3GEYJ 102 V (1 K) | T | 12.9/30.8 |
| R509 | 7030003360 | S.RES ERJ3GEYJ 221 V (220) | T | 31.1/34.8 |
| R510 | 7030003360 | S.RES ERJ3GEYJ 221 V (220) | T | 32.2/21.9 |
| R535 | 7030003360 | S.RES ERJ3GEYJ 221 V (220) | T | 26.4/21.9 |
| R536 | 7030003360 | S.RES ERJ3GEYJ 221 V (220) | T | 25.7/19 |
| R537 | 7030003360 | S.RES ERJ3GEYJ 221 V (220) | T | 23.6/21.9 |
| R538 | 7030003360 | S.RES ERJ3GEYJ 221 V (220) | T | 24.3/19 |
| R539 | 7030003360 | S.RES ERJ3GEYJ 221 V (220) | T | 25/21.8 |
| R540 | 7030003360 | S.RES ERJ3GEYJ 221 V (220) | T | 30.1/19 |
| R541 | 7030003360 | S.RES ERJ3GEYJ 221 V (220) | T | 29.4/21.9 |
| R542 | 7030003360 | S.RES ERJ3GEYJ 221 V (220) | T | 28.7/19 |
| R543 | 7030003360 | S.RES ERJ3GEYJ 221 V (220) | T | 27.9/21.9 |
| R544 | 7030003360 | S.RES ERJ3GEYJ 221 V (220) | T | 27.2/19 |
| R545 | 7030003360 | S.RES ERJ3GEYJ 221 V (220) | T | 30.8/21.9 |
| R546 | 7030003360 | S.RES ERJ3GEYJ 221 V (220) | T | 31.5/19 |
| R547 | 7030003360 | S.RES ERJ3GEYJ 221 V (220) | T | 18/21.9 |
| R548 | 7030003360 | S.RES ERJ3GEYJ 221 V (220) | T | 17.3/19.1 |
| R549 | 7030003360 | S.RES ERJ3GEYJ 221 V (220) | T | 15.2/21.9 |
| R550 | 7030003360 | S.RES ERJ3GEYJ 221 V (220) | T | 16.6/21.9 |
| R551 | 7030003360 | S.RES ERJ3GEYJ 221 V (220) | T | 15.9/19.1 |
| R552 | 7030003360 | S.RES ERJ3GEYJ 221 V (220) | T | 20.1/19.2 |
| R553 | 7030003360 | S.RES ERJ3GEYJ 221 V (220) | T | 19.4/21.9 |
| R554 | 7030003360 | S.RES ERJ3GEYJ 221 V (220) | T | 18.7/19.1 |
| R555 | 7030003360 | S.RES ERJ3GEYJ 221 V (220) | T | 20.9/21.9 |
| R556 | 7030003360 | S.RES ERJ3GEYJ 221 V (220) | T | 21.6/19.2 |
| R557 | 7030003360 | S.RES ERJ3GEYJ 221 V (220) | T | 22.3/21.9 |
| R558 | 7030003360 | S.RES ERJ3GEYJ 221 V (220) | T | 23.5/34.2 |
| R600 | 7030000010 | S.RES MCR10EZHJ JPW (000) | B | 30.9/33.9 |
| R604 | 7030003560 | S.RES ERJ3GEYJ 103 V (10 K) | B | 145.1/17.1 |
| R605 | 7030003560 | S.RES ERJ3GEYJ 103 V (10 K) | B | 129.1/17.1 |
| R701 | 7030000380 | S.RES MCR10EZHJ 1 k | T | 53.2/20.4 |
| R702 | 7030000290 | S.RES MCR10EZHJ 180 (181) | T | 51.6/15.9 |
| R703 | 7030000220 | S.RES MCR10EZHJ 47 (470) | T | 51.6/13.8 |
| R704 | 7030003360 | S.RES ERJ3GEYJ 221 V (220) | T | 52.9/31.9 |
| R705 | 7030003350 | S.RES ERJ3GEYJ 181 V (180) | B | 49.4/9 |
| R706 | 7030003370 | S.RES ERJ3GEYJ 271 V (270) | B | 42.4/10.1 |
| R707 | 7030003560 | S.RES ERJ3GEYJ 103 V (10 K) | T | 51.3/12.2 |
| R708 | 7030000200 | S.RES MCR10EZHJ 33 (330) | T | 43.8/25.6 |
| R709 | 7030003240 | S.RES ERJ3GEYJ 220 V (22) | T | 46.5/19.8 |
| R710 | 7030003370 | S.RES ERJ3GEYJ 271 V (270) | B | 45.6/19.4 |
| R711 | 7030003370 | S.RES ERJ3GEYJ 271 V (270) | B | 45.6/21 |
| R713 | 7030000220 | S.RES MCR10EZHJ 47 (470) | B | 38.8/27.4 |
| R714 | 7030003460 | S.RES ERJ3GEYJ 152 V (1.5 K) | T | 53.5/29.2 |
| R715 | 7030003460 | S.RES ERJ3GEYJ 152 V (1.5 K) | T | 51.6/30 |
| R716 | 7030003680 | S.RES ERJ3GEYJ 104 V (100 K) | B | 14.5/15.5 |
| C1 | 4030011600 | S.CER C1608 JB 1E 104K-T | B | 15.2/55.4 |
| C2 | 4030011600 | S.CER C1608 JB 1E 104K-T | T | 7.9/31.8 |

## [DIGISEL UNIT]

| REF NO. | PARTS NO. | DESCRIPTION | M. | H/V LOCATION |
|---|---|---|---|---|
| C4 | 4030011600 | S.CER C1608 JB 1E 104K-T | T | 31.8/50.7 |
| C5 | 4030011600 | S.CER C1608 JB 1E 104K-T | T | 16/51.6 |
| C21 | 4030006880 | S.CER C1608 JB 1H 472K-T | B | 30.4/45.9 |
| C35 | 4030006880 | S.CER C1608 JB 1H 472K-T | T | 32.1/65.3 |
| C51 | 4030006880 | S.CER C1608 JB 1H 472K-T | B | 64.8/57.2 |
| C52 | 4030006880 | S.CER C1608 JB 1H 472K-T | T | 57.6/45.8 |
| C53 | 4030006880 | S.CER C1608 JB 1H 472K-T | T | 51.5/59.2 |
| C54 | 4030006880 | S.CER C1608 JB 1H 472K-T | T | 87.3/72.3 |
| C55 | 4030006880 | S.CER C1608 JB 1H 472K-T | B | 67.1/63.5 |
| C56 | 4030006880 | S.CER C1608 JB 1H 472K-T | T | 66.5/54.9 |
| C57 | 4030006880 | S.CER C1608 JB 1H 472K-T | B | 66.2/45.6 |
| C58 | 4030006880 | S.CER C1608 JB 1H 472K-T | T | 114.3/50.4 |
| C59 | 4030006880 | S.CER C1608 JB 1H 472K-T | T | 90.4/51.4 |
| C60 | 4030006880 | S.CER C1608 JB 1H 472K-T | T | 90.4/54.4 |
| C61 | 4030006880 | S.CER C1608 JB 1H 472K-T | T | 114.3/53.7 |
| C62 | 4030006880 | S.CER C1608 JB 1H 472K-T | T | 138.2/51.1 |
| C63 | 4030006880 | S.CER C1608 JB 1H 472K-T | T | 138.2/54.4 |
| C64 | 4030006880 | S.CER C1608 JB 1H 472K-T | T | 162.1/50.8 |
| C65 | 4030006880 | S.CER C1608 JB 1H 472K-T | T | 162.1/53.9 |
| C66 | 4030006880 | S.CER C1608 JB 1H 472K-T | B | 182.5/47.7 |
| C67 | 4030006880 | S.CER C1608 JB 1H 472K-T | T | 114.3/57.2 |
| C68 | 4030006880 | S.CER C1608 JB 1H 472K-T | T | 88.3/63 |
| C69 | 4030006880 | S.CER C1608 JB 1H 472K-T | B | 183.7/64.8 |
| C70 | 4030006880 | S.CER C1608 JB 1H 472K-T | T | 162.1/60.2 |
| C71 | 4030006880 | S.CER C1608 JB 1H 472K-T | T | 162.1/57.3 |
| C72 | 4030006880 | S.CER C1608 JB 1H 472K-T | T | 138.2/59.5 |
| C73 | 4030006880 | S.CER C1608 JB 1H 472K-T | T | 135.8/63 |
| C74 | 4030006880 | S.CER C1608 JB 1H 472K-T | T | 114.3/60.4 |
| C75 | 4030006880 | S.CER C1608 JB 1H 472K-T | T | 90.5/59.6 |
| C101 | 4030011340 | S.CER C1608 CH 1H 471J-T | T | 68.2/68.4 |
| C102 | 4030011280 | S.CER C1608 CH 1H 271J-T | T | 59.5/69.2 |
| C103 | 4030011280 | S.CER C1608 CH 1H 271J-T | T | 60.5/56.7 |
| C104 | 4030007130 | S.CER C1608 CH 1H 101J-T | T | 57.7/52.7 |
| C105 | 4030006940 | S.CER C1608 CH 1H 030C-T | B | 65.7/51.9 |
| C106 | 4030007150 | S.CER C1608 CH 1H 151J-T | B | 56.4/70.2 |
| C107 | 4030007150 | S.CER C1608 CH 1H 151J-T | B | 60.3/70.6 |
| C108 | 4030007150 | S.CER C1608 CH 1H 151J-T | B | 62.4/70.6 |
| C109 | 4030007150 | S.CER C1608 CH 1H 151J-T | B | 56.4/68.8 |
| C110 | 4030009520 | S.CER C1608 CH 1H 020B-T | T | 77.2/69.1 |
| C111 | 4030009550 | S.CER C1608 CH 1H 2R5B-T | T | 77.2/67.8 |
| C113 | 4030007000 | S.CER C1608 CH 1H 090D-T | T | 73.7/58.9 |
| C114 | 4030007040 | S.CER C1608 CH 1H 180J-T | T | 71.7/59.5 |
| C115 | 4030007040 | S.CER C1608 CH 1H 180J-T | T | 70.4/59.5 |
| C116 | 4030007040 | S.CER C1608 CH 1H 180J-T | T | 69.1/59.5 |
| C117 | 4030007070 | S.CER C1608 CH 1H 330J-T | T | 77.2/70.4 |
| C118 | 4030007090 | S.CER C1608 CH 1H 470J-T | B | 76.7/59.8 |
| C119 | 4030007040 | S.CER C1608 CH 1H 180J-T | B | 66.1/48.1 |
| C120 | 4030007040 | S.CER C1608 CH 1H 180J-T | B | 66.1/49.8 |
| C121 | 4030007040 | S.CER C1608 CH 1H 180J-T | B | 74.4/59.7 |
| C122 | 4030007000 | S.CER C1608 CH 1H 090D-T | B | 74.3/70.3 |
| C124 | 4030009520 | S.CER C1608 CH 1H 020B-T | B | 77.4/68.9 |
| C125 | 4030009550 | S.CER C1608 CH 1H 2R5B-T | B | 76.1/68.9 |
| C126 | 4030008360 | S.CER C1608 UJ 1H 101J-T | B | 124.5/63.3 |
| C128 | 4030009500 | S.CER C1608 CH 1H 0R5B-T | B | 107.2/55.4 |
| C129 | 4030009510 | S.CER C1608 CH 1H 010B-T | B | 83.2/55.8 |
| C130 | 4030009520 | S.CER C1608 CH 1H 020B-T | B | 97.6/55.5 |
| C131 | 4030009910 | S.CER C1608 CH 1H 040B-T | B | 121.5/55.6 |
| C132 | 4030006990 | S.CER C1608 CH 1H 080D-T | B | 131/55.6 |
| C133 | 4030007040 | S.CER C1608 CH 1H 180J-T | B | 145.4/55.7 |
| C134 | 4030008750 | S.CER C1608 CH 1H 360J-T | B | 154.9/55.7 |
| C135 | 4030007110 | S.CER C1608 CH 1H 680J-T | B | 169.3/55.7 |
| C136 | 4030007140 | S.CER C1608 CH 1H 121J-T | B | 178.8/55.7 |
| C137 | 4030007140 | S.CER C1608 CH 1H 121J-T | B | 107.4/63.8 |
| C138 | 4030007130 | S.CER C1608 CH 1H 101J-T | B | 107.4/62.5 |
| C139 | 4030007160 | S.CER C1608 CH 1H 181J-T | B | 83.6/62.7 |
| C140 | 4030007160 | S.CER C1608 CH 1H 181J-T | B | 83.6/64.5 |
| C141 | 4030008330 | S.CER C1608 UJ 1H 560J-T | B | 177.2/63.2 |
| C142 | 4030008330 | S.CER C1608 UJ 1H 560J-T | B | 169.3/63.2 |
| C143 | 4030007090 | S.CER C1608 CH 1H 470J-T | B | 155.2/63.2 |
| C201 | 4030011600 | S.CER C1608 JB 1E 104K-T | B | 49.1/57.2 |
| C202 | 4030006900 | S.CER C1608 JB 1H 103K-T | T | 57.7/55.4 |
| C203 | 4030011600 | S.CER C1608 JB 1E 104K-T | B | 50.4/46.3 |
| C204 | 4030011600 | S.CER C1608 JB 1E 104K-T | B | 53.2/45.4 |
| C205 | 4030011600 | S.CER C1608 JB 1E 104K-T | B | 43.4/59.6 |
| C206 | 4030011600 | S.CER C1608 JB 1E 104K-T | B | 44.4/54.6 |
| C207 | 4030006880 | S.CER C1608 JB 1H 472K-T | B | 41.1/59.6 |
| C208 | 4030007010 | S.CER C1608 CH 1H 100D-T | T | 45/56.1 |
| C209 | 4030006880 | S.CER C1608 JB 1H 472K-T | B | 38.1/59.6 |
| C210 | 4030006900 | S.CER C1608 JB 1H 103K-T | B | 45.2/52.1 |
| C211 | 4030009000 | S.CER C2012 JB 1C 224K-T | B | 45.6/47.9 |
| C212 | 4030006880 | S.CER C1608 JB 1H 472K-T | B | 52.4/62 |
| C213 | 4030006880 | S.CER C1608 JB 1H 472K-T | T | 54.5/45.1 |
| C214 | 4030006880 | S.CER C1608 JB 1H 472K-T | B | 48.5/46.3 |
| C215 | 4030006880 | S.CER C1608 JB 1H 472K-T | T | 43.8/68.4 |
| C501 | 4030011600 | S.CER C1608 JB 1E 104K-T | B | 27/25.3 |
| C504 | 4030011600 | S.CER C1608 JB 1E 104K-T | T | 30.8/33.4 |
| C505 | 4030011600 | S.CER C1608 JB 1E 104K-T | T | 19.5/33.7 |
| C521 | 4030006880 | S.CER C1608 JB 1H 472K-T | B | 28/35 |
| C535 | 4030006880 | S.CER C1608 JB 1H 472K-T | T | 33.5/21.9 |
| C551 | 4030006880 | S.CER C1608 JB 1H 472K-T | B | 63.6/10.9 |
| C552 | 4030006880 | S.CER C1608 JB 1H 472K-T | T | 61.5/22.9 |
| C553 | 4030006880 | S.CER C1608 JB 1H 472K-T | B | 58/10.2 |
| C554 | 4030006880 | S.CER C1608 JB 1H 472K-T | T | 90.3/12.9 |
| C555 | 4030006880 | S.CER C1608 JB 1H 472K-T | B | 68.8/12.6 |
| C556 | 4030006880 | S.CER C1608 JB 1H 472K-T | B | 69.8/27.9 |
| C557 | 4030006880 | S.CER C1608 JB 1H 472K-T | B | 67.4/32.9 |
| C558 | 4030006880 | S.CER C1608 JB 1H 472K-T | T | 114.3/25.9 |
| C559 | 4030006880 | S.CER C1608 JB 1H 472K-T | T | 90.4/27.1 |
| C560 | 4030006880 | S.CER C1608 JB 1H 472K-T | T | 90.4/30.5 |
| C561 | 4030006880 | S.CER C1608 JB 1H 472K-T | T | 114.3/29.9 |
| C562 | 4030006880 | S.CER C1608 JB 1H 472K-T | T | 138.2/27.1 |
| C563 | 4030006880 | S.CER C1608 JB 1H 472K-T | T | 138.2/30.5 |
| C564 | 4030006880 | S.CER C1608 JB 1H 472K-T | T | 162.1/27.2 |
| C565 | 4030006880 | S.CER C1608 JB 1H 472K-T | T | 162.1/30.4 |
| C566 | 4030006880 | S.CER C1608 JB 1H 472K-T | B | 180.9/33.5 |

M.=Mounted side (T: Mounted on the Top side, B: Mounted on the Bottom side)
S.=Surface mount

## [DIGISEL UNIT]

| REF NO. | PARTS NO. | DESCRIPTION | M. | H/V LOCATION |
|---|---|---|---|---|
| C567 | 4030006880 | S.CER C1608 JB 1H 472K-T | T | 109.8/17.8 |
| C568 | 4030006880 | S.CER C1608 JB 1H 472K-T | T | 90.4/19.5 |
| C569 | 4030006880 | S.CER C1608 JB 1H 472K-T | B | 181.8/17.1 |
| C570 | 4030006880 | S.CER C1608 JB 1H 472K-T | T | 162.1/22.4 |
| C571 | 4030006880 | S.CER C1608 JB 1H 472K-T | T | 158.5/17.6 |
| C572 | 4030006880 | S.CER C1608 JB 1H 472K-T | T | 138.2/23.1 |
| C573 | 4030006880 | S.CER C1608 JB 1H 472K-T | T | 134.8/17.5 |
| C574 | 4030006880 | S.CER C1608 JB 1H 472K-T | T | 114.3/20.6 |
| C575 | 4030006880 | S.CER C1608 JB 1H 472K-T | T | 90.4/23.3 |
| C601 | 4030011340 | S.CER C1608 CH 1H 471J-T | B | 66/22.5 |
| C602 | 4030011280 | S.CER C1608 CH 1H 271J-T | B | 65.2/26.7 |
| C603 | 4030011280 | S.CER C1608 CH 1H 271J-T | T | 59.1/35.6 |
| C604 | 4030007130 | S.CER C1608 CH 1H 101J-T | T | 57.7/33 |
| C605 | 4030006940 | S.CER C1608 CH 1H 030C-T | T | 57.2/29 |
| C606 | 4030007150 | S.CER C1608 CH 1H 151J-T | T | 55.6/30.7 |
| C607 | 4030007150 | S.CER C1608 CH 1H 151J-T | T | 57.2/25.4 |
| C608 | 4030007150 | S.CER C1608 CH 1H 151J-T | T | 57.2/23.8 |
| C609 | 4030007150 | S.CER C1608 CH 1H 151J-T | T | 56.8/22.5 |
| C610 | 4030009520 | S.CER C1608 CH 1H 020B-T | B | 77.3/11.3 |
| C611 | 4030009550 | S.CER C1608 CH 1H 2R5B-T | B | 76/11.3 |
| C613 | 4030007000 | S.CER C1608 CH 1H 090D-T | B | 73.8/12.5 |
| C614 | 4030007040 | S.CER C1608 CH 1H 180J-T | B | 73.7/21.1 |
| C615 | 4030007040 | S.CER C1608 CH 1H 180J-T | B | 73.9/28.2 |
| C616 | 4030007040 | S.CER C1608 CH 1H 180J-T | B | 73.9/29.7 |
| C617 | 4030007070 | S.CER C1608 CH 1H 330J-T | B | 76/19.4 |
| C618 | 4030007090 | S.CER C1608 CH 1H 470J-T | T | 75.5/20.7 |
| C619 | 4030007040 | S.CER C1608 CH 1H 180J-T | T | 65.6/35.3 |
| C620 | 4030007040 | S.CER C1608 CH 1H 180J-T | T | 65.7/36.7 |
| C621 | 4030007040 | S.CER C1608 CH 1H 180J-T | T | 73.7/28.3 |
| C622 | 4030007000 | S.CER C1608 CH 1H 090D-T | T | 73.2/20.2 |
| C624 | 4030009520 | S.CER C1608 CH 1H 020B-T | T | 76.9/10.6 |
| C625 | 4030009550 | S.CER C1608 CH 1H 2R5B-T | T | 76.9/12 |
| C626 | 4030008360 | S.CER C1608 UJ 1H 101J-T | B | 124.5/17.4 |
| C628 | 4030009500 | S.CER C1608 CH 1H 0R5B-T | B | 107.4/25.3 |
| C629 | 4030009510 | S.CER C1608 CH 1H 010B-T | B | 83.3/25.5 |
| C630 | 4030009520 | S.CER C1608 CH 1H 020B-T | B | 97.8/25.3 |
| C631 | 4030009910 | S.CER C1608 CH 1H 040B-T | B | 121.2/25.3 |
| C632 | 4030006990 | S.CER C1608 CH 1H 080D-T | B | 131.3/25.3 |
| C633 | 4030007040 | S.CER C1608 CH 1H 180J-T | B | 145.2/25.3 |
| C634 | 4030008750 | S.CER C1608 CH 1H 360J-T | B | 155.2/25.3 |
| C635 | 4030007110 | S.CER C1608 CH 1H 680J-T | B | 169/25.3 |
| C636 | 4030007140 | S.CER C1608 CH 1H 121J-T | B | 179.1/25.3 |
| C637 | 4030007140 | S.CER C1608 CH 1H 121J-T | B | 107.4/18.3 |
| C638 | 4030007130 | S.CER C1608 CH 1H 101J-T | B | 107.4/16.5 |
| C639 | 4030007160 | S.CER C1608 CH 1H 181J-T | B | 83.9/18.1 |
| C640 | 4030007160 | S.CER C1608 CH 1H 181J-T | B | 84.7/16.3 |
| C641 | 4030008330 | S.CER C1608 UJ 1H 560J-T | B | 177/17.9 |
| C642 | 4030008330 | S.CER C1608 UJ 1H 560J-T | B | 169/18 |
| C643 | 4030007090 | S.CER C1608 CH 1H 470J-T | B | 155.5/18 |
| C701 | 4030011600 | S.CER C1608 JB 1E 104K-T | T | 52.3/17.7 |
| C702 | 4030006900 | S.CER C1608 JB 1H 103K-T | T | 54.6/27.3 |
| C703 | 4030011600 | S.CER C1608 JB 1E 104K-T | B | 40.3/10.4 |
| C704 | 4030011600 | S.CER C1608 JB 1E 104K-T | B | 52.1/9.8 |
| C705 | 4030011600 | S.CER C1608 JB 1E 104K-T | B | 44/28.1 |
| C706 | 4030011600 | S.CER C1608 JB 1E 104K-T | T | 45.1/22.6 |
| C707 | 4030006880 | S.CER C1608 JB 1H 472K-T | B | 42.7/28.1 |
| C708 | 4030007010 | S.CER C1608 CH 1H 100D-T | T | 46.5/22.7 |
| C709 | 4030006880 | S.CER C1608 JB 1H 472K-T | B | 40.6/28.9 |
| C710 | 4030006900 | S.CER C1608 JB 1H 103K-T | B | 45.6/22.7 |
| C711 | 4030009000 | S.CER C2012 JB 1C 224K-T | B | 45.7/24.4 |
| C712 | 4030006880 | S.CER C1608 JB 1H 472K-T | T | 54.8/32.3 |
| C713 | 4030006880 | S.CER C1608 JB 1H 472K-T | B | 52.1/7.9 |
| C714 | 4030006880 | S.CER C1608 JB 1H 472K-T | B | 42.4/6.5 |
| C715 | 4030006880 | S.CER C1608 JB 1H 472K-T | T | 54.2/34.3 |
| RL2 | 6330001750 | RLY FTR-B4CA012Z | | |
| RL21 | 6330001750 | RLY FTR-B4CA012Z | | |
| RL51 | 6330001750 | RLY FTR-B4CA012Z | | |
| RL52 | 6330001750 | RLY FTR-B4CA012Z | | |
| RL53 | 6330001750 | RLY FTR-B4CA012Z | | |
| RL54 | 6330001750 | RLY FTR-B4CA012Z | | |
| RL55 | 6330001750 | RLY FTR-B4CA012Z | | |
| RL56 | 6330001750 | RLY FTR-B4CA012Z | | |
| RL57 | 6330001750 | RLY FTR-B4CA012Z | | |
| RL58 | 6330001750 | RLY FTR-B4CA012Z | | |
| RL59 | 6330001750 | RLY FTR-B4CA012Z | | |
| RL60 | 6330001750 | RLY FTR-B4CA012Z | | |
| RL61 | 6330001750 | RLY FTR-B4CA012Z | | |
| RL62 | 6330001750 | RLY FTR-B4CA012Z | | |
| RL63 | 6330001750 | RLY FTR-B4CA012Z | | |
| RL64 | 6330001750 | RLY FTR-B4CA012Z | | |
| RL65 | 6330001750 | RLY FTR-B4CA012Z | | |
| RL66 | 6330001750 | RLY FTR-B4CA012Z | | |
| RL67 | 6330001750 | RLY FTR-B4CA012Z | | |
| RL69 | 6330001750 | RLY FTR-B4CA012Z | | |
| RL70 | 6330001750 | RLY FTR-B4CA012Z | | |
| RL71 | 6330001750 | RLY FTR-B4CA012Z | | |
| RL72 | 6330001750 | RLY FTR-B4CA012Z | | |
| RL73 | 6330001750 | RLY FTR-B4CA012Z | | |
| RL74 | 6330001750 | RLY FTR-B4CA012Z | | |
| RL75 | 6330001750 | RLY FTR-B4CA012Z | | |
| RL76 | 6330001750 | RLY FTR-B4CA012Z | | |
| RL201 | 6330001750 | RLY FTR-B4CA012Z | | |
| RL502 | 6330001750 | RLY FTR-B4CA012Z | | |
| RL521 | 6330001750 | RLY FTR-B4CA012Z | | |
| RL551 | 6330001750 | RLY FTR-B4CA012Z | | |
| RL552 | 6330001750 | RLY FTR-B4CA012Z | | |
| RL553 | 6330001750 | RLY FTR-B4CA012Z | | |
| RL554 | 6330001750 | RLY FTR-B4CA012Z | | |
| RL555 | 6330001750 | RLY FTR-B4CA012Z | | |
| RL556 | 6330001750 | RLY FTR-B4CA012Z | | |
| RL557 | 6330001750 | RLY FTR-B4CA012Z | | |
| RL558 | 6330001750 | RLY FTR-B4CA012Z | | |
| RL559 | 6330001750 | RLY FTR-B4CA012Z | | |

## [DIGISEL UNIT]

| REF NO. | PARTS NO. | DESCRIPTION | M. | H/V LOCATION |
|---|---|---|---|---|
| RL560 | 6330001750 | RLY FTR-B4CA012Z | | |
| RL561 | 6330001750 | RLY FTR-B4CA012Z | | |
| RL562 | 6330001750 | RLY FTR-B4CA012Z | | |
| RL563 | 6330001750 | RLY FTR-B4CA012Z | | |
| RL564 | 6330001750 | RLY FTR-B4CA012Z | | |
| RL565 | 6330001750 | RLY FTR-B4CA012Z | | |
| RL566 | 6330001750 | RLY FTR-B4CA012Z | | |
| RL567 | 6330001750 | RLY FTR-B4CA012Z | | |
| RL569 | 6330001750 | RLY FTR-B4CA012Z | | |
| RL570 | 6330001750 | RLY FTR-B4CA012Z | | |
| RL571 | 6330001750 | RLY FTR-B4CA012Z | | |
| RL572 | 6330001750 | RLY FTR-B4CA012Z | | |
| RL573 | 6330001750 | RLY FTR-B4CA012Z | | |
| RL574 | 6330001750 | RLY FTR-B4CA012Z | | |
| RL575 | 6330001750 | RLY FTR-B4CA012Z | | |
| RL576 | 6330001750 | RLY FTR-B4CA012Z | | |
| RL701 | 6330001750 | RLY FTR-B4CA012Z | | |
| J1 | 6510007020 | CNR TMP-J01X-V6 | | |
| J2 | 6510007020 | CNR TMP-J01X-V6 | | |
| J10 | 6510020081 | S.CNR 52808-2071 (2090) | T | 4.5/40.5 |
| J501 | 6510007020 | CNR TMP-J01X-V6 | | |
| J502 | 6510007020 | CNR TMP-J01X-V6 | | |

M.=Mounted side (T: Mounted on the Top side, B: Mounted on the Bottom side)
S.=Surface mount

## [NETWORK UNIT]

| REF NO. | PARTS NO. | DESCRIPTION | | M. | H/V LOCATION |
|---|---|---|---|---|---|
| Q300 | 1520000561 | S.TR | 2SB1123 T-TD-E | T | 205.7/10.5 |
| Q301 | 1590000680 | S.TR | DTC114EUA T106 | T | 201.4/9.1 |
| L50 | 6110003950 | COL | LA-598 | | |
| L60 | 6110003910 | COL | LA-593 | | |
| L70 | 6110003050 | COL | LA-492 | | |
| L80 | 6110003050 | COL | LA-492 | | |
| L90 | 6110003060 | COL | LA-493 | | |
| L100 | 6110003070 | COL | LA-494 | | |
| L110 | 6110003920 | COL | LA-594 | | |
| L120 | 6140004460 | COL | LR-504 | | |
| L130 | 6140004470 | COL | LR-505 | | |
| L131 | 6140004470 | COL | LR-505 | | |
| L300 | 6180000990 | COL | LAL 04NA 101K | | |
| R300 | 7030000420 | S.RES | MCR10EZHJ 2.2 k | T | 202.8/6.9 |
| R301 | 7030000420 | S.RES | MCR10EZHJ 2.2 k | T | 201.5/11.3 |
| R302 | 7030000420 | S.RES | MCR10EZHJ 2.2 k | T | 206.2/6.9 |
| R303 | 7030009800 | S.RES | ERJ12YJ121U (120) | T | 209.7/5 |
| C1 | 4620000150 | VAR | KB-150-07 150P | | |
| C2 | 4620000150 | VAR | KB-150-07 150P | | |
| C3 | 4010007580 | CER | HT20SJ SL 201J 3KV | | |
| C4 | 4010007580 | CER | HT20SJ SL 201J 3KV | | |
| C5 | 4010007580 | CER | HT20SJ SL 201J 3KV | | |
| C6 | 4010007580 | CER | HT20SJ SL 201J 3KV | | |
| C7 | 4010007580 | CER | HT20SJ SL 201J 3KV | | |
| C8 | 4010007580 | CER | HT20SJ SL 201J 3KV | | |
| C9 | 4010007580 | CER | HT20SJ SL 201J 3KV | | |
| C10 | 4010007580 | CER | HT20SJ SL 201J 3KV | | |
| C20 | 4010007570 | CER | HT15SJ SL 151J 3KV | | |
| C21 | 4010007570 | CER | HT15SJ SL 151J 3KV | | |
| C22 | 4010007570 | CER | HT15SJ SL 151J 3KV | | |
| C23 | 4010007570 | CER | HT15SJ SL 151J 3KV | | |
| C24 | 4010007570 | CER | HT15SJ SL 151J 3KV | | |
| C25 | 4010007570 | CER | HT15SJ SL 151J 3KV | | |
| C26 | 4010007570 | CER | HT15SJ SL 151J 3KV | | |
| C27 | 4010007570 | CER | HT15SJ SL 151J 3KV | | |
| C30 | 4010007550 | CER | HT11SJ SL 820J 3KV | | |
| C31 | 4010007550 | CER | HT11SJ SL 820J 3KV | | |
| C32 | 4010007550 | CER | HT11SJ SL 820J 3KV | | |
| C33 | 4010007550 | CER | HT11SJ SL 820J 3KV | | |
| C34 | 4010007550 | CER | HT11SJ SL 820J 3KV | | |
| C35 | 4010007550 | CER | HT11SJ SL 820J 3KV | | |
| C36 | 4010007550 | CER | HT11SJ SL 820J 3KV | | |
| C37 | 4010007550 | CER | HT11SJ SL 820J 3KV | | |
| C40 | 4010008550 | CER | DEA1X3F390JC3B | | |
| C41 | 4010008550 | CER | DEA1X3F390JC3B | | |
| C42 | 4010008550 | CER | DEA1X3F390JC3B | | |
| C43 | 4010008550 | CER | DEA1X3F390JC3B | | |
| C44 | 4010008550 | CER | DEA1X3F390JC3B | | |
| C45 | 4010008550 | CER | DEA1X3F390JC3B | | |
| C46 | 4010008550 | CER | DEA1X3F390JC3B | | |
| C47 | 4010008550 | CER | DEA1X3F390JC3B | | |
| C50 | 4030006880 | S.CER | C1608 JB 1H 472K-T | T | 140.7/12 |
| C60 | 4030006880 | S.CER | C1608 JB 1H 472K-T | T | 154.1/12 |
| C70 | 4030006880 | S.CER | C1608 JB 1H 472K-T | T | 167.5/16.1 |
| C80 | 4030006880 | S.CER | C1608 JB 1H 472K-T | T | 181.9/21.5 |
| C90 | 4030006880 | S.CER | C1608 JB 1H 472K-T | T | 195.3/21.3 |
| C100 | 4030006880 | S.CER | C1608 JB 1H 472K-T | T | 204.4/20.7 |
| C110 | 4030006880 | S.CER | C1608 JB 1H 472K-T | T | 205.8/20.7 |
| C120 | 4030006880 | S.CER | C1608 JB 1H 472K-T | T | 207.2/20.6 |
| C202 | 4030006880 | S.CER | C1608 JB 1H 472K-T | T | 187.4/13.2 |
| C203 | 4030006880 | S.CER | C1608 JB 1H 472K-T | T | 188.4/15.7 |
| C204 | 4030006880 | S.CER | C1608 JB 1H 472K-T | T | 189.4/13.2 |
| C205 | 4030006880 | S.CER | C1608 JB 1H 472K-T | T | 190.4/15.7 |
| C206 | 4030006880 | S.CER | C1608 JB 1H 472K-T | T | 191.4/13.2 |
| C207 | 4030006880 | S.CER | C1608 JB 1H 472K-T | T | 192.4/15.7 |
| C208 | 4030006880 | S.CER | C1608 JB 1H 472K-T | T | 193.4/13.2 |
| C209 | 4030006880 | S.CER | C1608 JB 1H 472K-T | T | 194.4/15.7 |
| C252 | 4030006880 | S.CER | C1608 JB 1H 472K-T | T | 175.4/13.2 |
| C253 | 4030006880 | S.CER | C1608 JB 1H 472K-T | T | 176.4/15.7 |
| C254 | 4030006880 | S.CER | C1608 JB 1H 472K-T | T | 177.4/13.2 |
| C255 | 4030006880 | S.CER | C1608 JB 1H 472K-T | T | 178.4/15.7 |
| C256 | 4030006880 | S.CER | C1608 JB 1H 472K-T | T | 179.4/13.2 |
| C257 | 4030006880 | S.CER | C1608 JB 1H 472K-T | T | 180.4/15.7 |
| C258 | 4030006880 | S.CER | C1608 JB 1H 472K-T | T | 181.4/13.2 |
| C259 | 4030006880 | S.CER | C1608 JB 1H 472K-T | T | 182.4/15.7 |
| C300 | 4030006880 | S.CER | C1608 JB 1H 472K-T | T | 184.4/13.2 |
| C301 | 4030006880 | S.CER | C1608 JB 1H 472K-T | T | 210.5/10.1 |
| RL10 | 6330001200 | RLY | VS-12MBU-UC | | |
| RL11 | 6330001200 | RLY | VS-12MBU-UC | | |
| RL20 | 6330001200 | RLY | VS-12MBU-UC | | |
| RL21 | 6330001200 | RLY | VS-12MBU-UC | | |
| RL30 | 6330001200 | RLY | VS-12MBU-UC | | |
| RL31 | 6330001200 | RLY | VS-12MBU-UC | | |
| RL40 | 6330001200 | RLY | VS-12MBU-UC | | |
| RL41 | 6330001200 | RLY | VS-12MBU-UC | | |
| RL50 | 6330001460 | RLY | FTR-F1CA012V | | |
| RL60 | 6330001200 | RLY | VS-12MBU-UC | | |
| RL70 | 6330001200 | RLY | VS-12MBU-UC | | |
| RL80 | 6330001200 | RLY | VS-12MBU-UC | | |
| RL90 | 6330001200 | RLY | VS-12MBU-UC | | |
| RL100 | 6330001200 | RLY | VS-12MBU-UC | | |
| RL110 | 6330001200 | RLY | VS-12MBU-UC | | |
| RL120 | 6330001200 | RLY | VS-12MBU-UC | | |
| J1 | 6510021561 | S.CNR | 52808-2470 (2490) | T | 184.9/7.4 |
| J2 | 6510017930 | CNR | 1771P145-20 | | |
| J3 | 6510017930 | CNR | 1771P145-20 | | |
| J4 | 6510003521 | CNR | S04B-EH-S (LF) (SN) | | |

## [FILTER UNIT]

| REF NO. | PARTS NO. | DESCRIPTION | | M. | H/V LOCATION |
|---|---|---|---|---|---|
| D402 | 1750000271 | S.DIO | 1SS301 (TE85L,F) | T | 11.8/24.3 |
| D452 | 1750000271 | S.DIO | 1SS301 (TE85L,F) | T | 32/20.5 |
| D502 | 1750000271 | S.DIO | 1SS301 (TE85L,F) | T | 54.8/30.3 |
| D552 | 1750000271 | S.DIO | 1SS301 (TE85L,F) | T | 155.6/29.1 |
| D602 | 1750000271 | S.DIO | 1SS301 (TE85L,F) | T | 130.1/20.3 |
| D652 | 1750000271 | S.DIO | 1SS301 (TE85L,F) | T | 93.8/33 |
| D702 | 1750000271 | S.DIO | 1SS301 (TE85L,F) | T | 69.6/20.3 |
| D752 | 1750000271 | S.DIO | 1SS301 (TE85L,F) | T | 113.1/33 |
| D802 | 1750000271 | S.DIO | 1SS301 (TE85L,F) | T | 173.6/25.9 |
| L401 | 6200005131 | S.COL | NLC453232T-101K-PF | T | 25.4/136.7 |
| L402 | 6140004310 | COL | LR-471 | | |
| L403 | 6140004300 | COL | LR-470 | | |
| L404 | 6140004300 | COL | LR-470 | | |
| L405 | 6200005131 | S.COL | NLC453232T-101K-PF | T | 7.3/24.6 |
| L451 | 6200005131 | S.COL | NLC453232T-101K-PF | T | 4.4/143.9 |
| L452 | 6140004270 | COL | LR-467 | | |
| L453 | 6140004290 | COL | LR-469 | | |
| L454 | 6140004290 | COL | LR-469 | | |
| L455 | 6200005131 | S.COL | NLC453232T-101K-PF | T | 28.4/29.9 |
| L501 | 6200005131 | S.COL | NLC453232T-101K-PF | T | 46.3/133.8 |
| L502 | 6140004280 | COL | LR-468 | | |
| L503 | 6140004270 | COL | LR-467 | | |
| L504 | 6140004270 | COL | LR-467 | | |
| L505 | 6200005131 | S.COL | NLC453232T-101K-PF | T | 50.2/29.6 |
| L551 | 6200005131 | S.COL | NLC453232T-101K-PF | T | 150.7/133.8 |
| L552 | 6140004260 | COL | LR-466 | | |
| L553 | 6140004280 | COL | LR-468 | | |
| L554 | 6140004280 | COL | LR-468 | | |
| L555 | 6200005131 | S.COL | NLC453232T-101K-PF | T | 151/29.7 |
| L601 | 6200005131 | S.COL | NLC453232T-101K-PF | T | 129.9/133.8 |
| L602 | 6140004250 | COL | LR-465 | | |
| L603 | 6140004240 | COL | LR-464 | | |
| L604 | 6140004240 | COL | LR-464 | | |
| L605 | 6200005131 | S.COL | NLC453232T-101K-PF | T | 130.1/14.2 |
| L651 | 6200005131 | S.COL | NLC453232T-101K-PF | T | 88.2/133.8 |
| L652 | 6140004200 | COL | LR-463 | | |
| L653 | 6140004170 | COL | LR-462 | | |
| L654 | 6140004170 | COL | LR-462 | | |
| L655 | 6200005131 | S.COL | NLC453232T-101K-PF | T | 92.3/29.8 |
| L701 | 6200005131 | S.COL | NLC453232T-101K-PF | T | 67.2/133.8 |
| L702 | 6140004130 | COL | LR-461 | | |
| L703 | 6140004070 | COL | LR-460 | | |
| L704 | 6140004070 | COL | LR-460 | | |
| L705 | 6200005131 | S.COL | NLC453232T-101K-PF | T | 69.6/14.1 |
| L751 | 6200005131 | S.COL | NLC453232T-101K-PF | T | 109.1/133.8 |
| L752 | 6110003900 | COL | LA-592 | | |
| L753 | 6110003890 | COL | LA-591 | | |
| L754 | 6110003890 | COL | LA-591 | | |
| L755 | 6200005131 | S.COL | NLC453232T-101K-PF | T | 111.4/29.8 |
| L801 | 6200001831 | S.COL | NLV32T-100J | T | 165.9/163.4 |
| L802 | 6110003880 | COL | LA-590 | | |
| L803 | 6110003870 | COL | LA-589 | | |
| L804 | 6110003870 | COL | LA-589 | | |
| L805 | 6200001831 | S.COL | NLV32T-100J | T | 173.9/22.8 |
| C401 | 4030006880 | S.CER | C1608 JB 1H 472K-T | T | 25.4/130.4 |
| C402 | 4010008200 | CER | HM11TJ SL 331J 500V | | |
| C403 | 4010008200 | CER | HM11TJ SL 331J 500V | | |
| C404 | 4010008300 | CER | HM11TJ SL 391J 500V | | |
| C405 | 4010008300 | CER | HM11TJ SL 391J 500V | | |
| C406 | 4010008210 | CER | HM60TJ SL 560J 500V | | |
| C407 | 4010007590 | CER | HM15SJ SL 681J 500V | | |
| C408 | 4010007590 | CER | HM15SJ SL 681J 500V | | |
| C409 | 4010007590 | CER | HM15SJ SL 681J 500V | | |
| C410 | 4010005870 | CER | HM95SJ SL 221J 500V | | |
| C411 | 4010008280 | CER | HM95TJ SL 221J 500V | | |
| C412 | 4010008370 | CER | HM60TJ SL 150J 500V | | |
| C413 | 4010007590 | CER | HM15SJ SL 681J 500V | | |
| C414 | 4010007590 | CER | HM15SJ SL 681J 500V | | |
| C415 | 4010007590 | CER | HM15SJ SL 681J 500V | | |
| C416 | 4010008300 | CER | HM11TJ SL 391J 500V | | |
| C417 | 4010008230 | CER | HM60TJ SL 820J 500V | | |
| C418 | 4010007590 | CER | HM15SJ SL 681J 500V | | |
| C419 | 4010007590 | CER | HM15SJ SL 681J 500V | | |
| C420 | 4030006880 | S.CER | C1608 JB 1H 472K-T | T | 11.6/26.3 |
| C451 | 4030006880 | S.CER | C1608 JB 1H 472K-T | T | 26.6/127.9 |
| C452 | 4010008290 | CER | HM95TJ SL 271J 500V | | |
| C453 | 4010008280 | CER | HM95TJ SL 221J 500V | | |
| C454 | 4010008240 | CER | HM60TJ SL 101J 500V | | |
| C455 | 4010005810 | CER | HM74SJ SL 111J 500V | | |
| C456 | 4010007490 | CER | HM15SJ SL 561J 500V | | |
| C457 | 4010006410 | CER | HM13SJ SL 471J 500V | | |
| C458 | 4010008250 | CER | HM74TJ SL 121J 500V | | |
| C459 | 4010005810 | CER | HM74SJ SL 111J 500V | | |
| C461 | 4010007490 | CER | HM15SJ SL 561J 500V | | |
| C462 | 4010007490 | CER | HM15SJ SL 561J 500V | | |
| C463 | 4010008340 | CER | HM60TJ SL 270J 500V | | |
| C464 | 4010008320 | CER | HM60TJ SL 390J 500V | | |
| C465 | 4010007490 | CER | HM15SJ SL 561J 500V | | |
| C466 | 4010008220 | CER | HM60TJ SL 680J 500V | | |
| C467 | 4030006880 | S.CER | C1608 JB 1H 472K-T | T | 32.4/23.4 |
| C468 | 4010008230 | CER | HM60TJ SL 820J 500V | | |
| C501 | 4030006880 | S.CER | C1608 JB 1H 472K-T | T | 47.6/127.3 |
| C502 | 4010008280 | CER | HM95TJ SL 221J 500V | | |
| C503 | 4010008260 | CER | HM74TJ SL 151J 500V | | |
| C504 | 4010008280 | CER | HM95TJ SL 221J 500V | | |
| C506 | 4010008200 | CER | HM11TJ SL 331J 500V | | |
| C507 | 4010008280 | CER | HM95TJ SL 221J 500V | | |
| C508 | 4010008280 | CER | HM95TJ SL 221J 500V | | |
| C509 | 4010005810 | CER | HM74SJ SL 111J 500V | | |
| C511 | 4010008300 | CER | HM11TJ SL 391J 500V | | |
| C512 | 4010008300 | CER | HM11TJ SL 391J 500V | | |
| C513 | 4010008260 | CER | HM74TJ SL 151J 500V | | |
| C514 | 4010008320 | CER | HM60TJ SL 390J 500V | | |

M.=Mounted side (T: Mounted on the Top side, B: Mounted on the Bottom side)
S.=Surface mount

## [FILTER UNIT]

| REF NO. | PARTS NO. | DESCRIPTION | | M. | H/V LOCATION |
|---|---|---|---|---|---|
| C515 | 4010008280 | CER | HM95TJ SL 221J 500V | | |
| C516 | 4010008280 | CER | HM95TJ SL 221J 500V | | |
| C517 | 4030006880 | S.CER | C1608 JB 1H 472K-T | T | 54.7/28.4 |
| C518 | 4010008340 | CER | HM60TJ SL 270J 500V | | |
| C551 | 4030006880 | S.CER | C1608 JB 1H 472K-T | T | 149.9/122.5 |
| C552 | 4010005860 | CER | HM95SJ SL 201J 500V | | |
| C554 | 4010008230 | CER | HM60TJ SL 820J 500V | | |
| C555 | 4010008370 | CER | HM60TJ SL 150J 500V | | |
| C556 | 4010008290 | CER | HM95TJ SL 271J 500V | | |
| C557 | 4010008290 | CER | HM95TJ SL 271J 500V | | |
| C558 | 4010008320 | CER | HM60TJ SL 390J 500V | | |
| C559 | 4010008330 | CER | HM60TJ SL 330J 500V | | |
| C560 | 4010008340 | CER | HM60TJ SL 270J 500V | | |
| C561 | 4010008200 | CER | HM11TJ SL 331J 500V | | |
| C562 | 4010008290 | CER | HM95TJ SL 271J 500V | | |
| C563 | 4010008330 | CER | HM60TJ SL 330J 500V | | |
| C564 | 4010005650 | CER | HM60SJ SL 200J 500V | | |
| C565 | 4010008280 | CER | HM95TJ SL 221J 500V | | |
| C566 | 4010008350 | CER | HM60TJ SL 220J 500V | | |
| C567 | 4030006880 | S.CER | C1608 JB 1H 472K-T | T | 152.2/32.2 |
| C601 | 4030006880 | S.CER | C1608 JB 1H 472K-T | T | 130.2/125 |
| C604 | 4010008230 | CER | HM60TJ SL 820J 500V | | |
| C605 | 4010008370 | CER | HM60TJ SL 150J 500V | | |
| C606 | 4010008280 | CER | HM95TJ SL 221J 500V | | |
| C607 | 4010008220 | CER | HM60TJ SL 680J 500V | | |
| C608 | 4010008350 | CER | HM60TJ SL 220J 500V | | |
| C609 | 4010008340 | CER | HM60TJ SL 270J 500V | | |
| C610 | 4010008200 | CER | HM11TJ SL 331J 500V | | |
| C611 | 4010008230 | CER | HM60TJ SL 820J 500V | | |
| C612 | 4010008360 | CER | HM60TJ SL 180J 500V | | |
| C613 | 4010008260 | CER | HM74TJ SL 151J 500V | | |
| C614 | 4010008230 | CER | HM60TJ SL 820J 500V | | |
| C615 | 4030006880 | S.CER | C1608 JB 1H 472K-T | T | 130.2/18.3 |
| C651 | 4030006880 | S.CER | C1608 JB 1H 472K-T | T | 88.3/124.9 |
| C654 | 4010008360 | CER | HM60TJ SL 180J 500V | | |
| C655 | 4010008320 | CER | HM60TJ SL 390J 500V | | |
| C656 | 4010008280 | CER | HM95TJ SL 221J 500V | | |
| C657 | 4010008220 | CER | HM60TJ SL 680J 500V | | |
| C658 | 4010008360 | CER | HM60TJ SL 180J 500V | | |
| C659 | 4010008380 | CER | HM60TJ SL 120J 500V | | |
| C660 | 4010008280 | CER | HM95TJ SL 221J 500V | | |
| C661 | 4010008240 | CER | HM60TJ SL 101J 500V | | |
| C662 | 4010008390 | CER | HM60TJ SL 100D 500V | | |
| C663 | 4010008250 | CER | HM74TJ SL 121J 500V | | |
| C664 | 4010008320 | CER | HM60TJ SL 390J 500V | | |
| C665 | 4030006880 | S.CER | C1608 JB 1H 472K-T | T | 96.6/28.6 |
| C701 | 4030006880 | S.CER | C1608 JB 1H 472K-T | T | 68.6/127.5 |
| C703 | 4010008370 | CER | HM60TJ SL 150J 500V | | |
| C704 | 4010008350 | CER | HM60TJ SL 220J 500V | | |
| C705 | 4010005650 | CER | HM60SJ SL 200J 500V | | |
| C706 | 4010005860 | CER | HM95SJ SL 201J 500V | | |
| C707 | 4010008310 | CER | HM60TJ SL 470J 500V | | |
| C708 | 4010008370 | CER | HM60TJ SL 150J 500V | | |
| C709 | 4010008280 | CER | HM95TJ SL 221J 500V | | |
| C710 | 4010008350 | CER | HM60TJ SL 220J 500V | | |
| C712 | 4010008330 | CER | HM60TJ SL 330J 500V | | |
| C713 | 4010008310 | CER | HM60TJ SL 470J 500V | | |
| C714 | 4030006880 | S.CER | C1608 JB 1H 472K-T | T | 69.6/18.3 |
| C715 | 4010008360 | CER | HM60TJ SL 180J 500V | | |
| C751 | 4030006880 | S.CER | C1608 JB 1H 472K-T | T | 109.1/125 |
| C755 | 4010008240 | CER | HM60TJ SL 101J 500V | | |
| C756 | 4010008230 | CER | HM60TJ SL 820J 500V | | |
| C757 | 4010008360 | CER | HM60TJ SL 180J 500V | | |
| C758 | 4010008210 | CER | HM60TJ SL 560J 500V | | |
| C759 | 4010008240 | CER | HM60TJ SL 101J 500V | | |
| C760 | 4010008400 | CER | HM60TJ SL 060D 500V | | |
| C761 | 4010008310 | CER | HM60TJ SL 470J 500V | | |
| C763 | 4030006880 | S.CER | C1608 JB 1H 472K-T | T | 115.6/28.6 |
| C764 | 4010005650 | CER | HM60SJ SL 200J 500V | | |
| C765 | 4010008370 | CER | HM60TJ SL 150J 500V | | |
| C801 | 4030006880 | S.CER | C1608 JB 1H 472K-T | T | 168.6/158.6 |
| C804 | 4010008360 | CER | HM60TJ SL 180J 500V | | |
| C805 | 4010008320 | CER | HM60TJ SL 390J 500V | | |
| C806 | 4010008310 | CER | HM60TJ SL 470J 500V | | |
| C807 | 4010005600 | CER | HM60SJ SL 090D 500V | | |
| C808 | 4010008330 | CER | HM60TJ SL 330J 500V | | |
| C809 | 4010008320 | CER | HM60TJ SL 390J 500V | | |
| C810 | 4010008410 | CER | HM60TJ SL 030C 500V | | |
| C811 | 4010005560 | CER | HM60SJ SL 050C 500V | | |
| C813 | 4030006880 | S.CER | C1608 JB 1H 472K-T | T | 175.6/26 |
| | | | | | |
| RL401 | 6330001471 | RLY | AJS1311F-K2 | | |
| RL402 | 6330001471 | RLY | AJS1311F-K2 | | |
| RL451 | 6330001471 | RLY | AJS1311F-K2 | | |
| RL452 | 6330001471 | RLY | AJS1311F-K2 | | |
| RL501 | 6330001471 | RLY | AJS1311F-K2 | | |
| RL502 | 6330001471 | RLY | AJS1311F-K2 | | |
| RL551 | 6330001471 | RLY | AJS1311F-K2 | | |
| RL552 | 6330001471 | RLY | AJS1311F-K2 | | |
| RL601 | 6330001471 | RLY | AJS1311F-K2 | | |
| RL602 | 6330001471 | RLY | AJS1311F-K2 | | |
| RL651 | 6330001471 | RLY | AJS1311F-K2 | | |
| RL652 | 6330001471 | RLY | AJS1311F-K2 | | |
| RL701 | 6330001471 | RLY | AJS1311F-K2 | | |
| RL702 | 6330001471 | RLY | AJS1311F-K2 | | |
| RL751 | 6330001471 | RLY | AJS1311F-K2 | | |
| RL752 | 6330001471 | RLY | AJS1311F-K2 | | |
| RL801 | 6330001460 | RLY | FTR-F1CA012V | | |
| RL802 | 6330001460 | RLY | FTR-F1CA012V | | |
| | | | | | |
| J901 | 6510017930 | CNR | 1771P145-20 | | |
| J902 | 6510022031 | S.CNR | B10B-ZR-SM4-TF (LF) (SN) | T | 145.3/165.2 |
| J903 | 6510019971 | S.CNR | 52808-1071 | T | 4/156 |
| J904 | 6510017930 | CNR | 1771P145-20 | | |
| J905 | 6510019421 | S.CNR | B8B-ZR-SM4-TF (LF) (SN) | T | 146.8/160.2 |

## [MEMORY UNIT]

| REF NO. | PARTS NO. | DESCRIPTION | | M. | H/V LOCATION |
|---|---|---|---|---|---|
| IC1 | 1130013516 | S.IC | JS28F128J3D-75(SX-2590A-11) | T | 39.8/26.2 |
| IC2 | 1130013515 | S.IC | JS28F128J3D-75(SX-2590A-9) | T | 24/26.2 |
| | | | | | |
| C1 | 4030011600 | S.CER | C1608 JB 1E 104K-T | T | 41.8/38.8 |
| C2 | 4030011600 | S.CER | C1608 JB 1E 104K-T | T | 39.9/13.2 |
| C3 | 4030011600 | S.CER | C1608 JB 1E 104K-T | T | 36.8/13.2 |
| C4 | 4030011600 | S.CER | C1608 JB 1E 104K-T | T | 26/38.8 |
| C5 | 4030011600 | S.CER | C1608 JB 1E 104K-T | T | 24/13.2 |
| C6 | 4030011600 | S.CER | C1608 JB 1E 104K-T | T | 21/13.2 |
| | | | | | |
| J1 | 6510024210 | S.CNR | AXK6S30435P | T | 55/20 |
| J2 | 6510024200 | S.CNR | AXK6S40435P | T | 10/20 |

M.=Mounted side (T: Mounted on the Top side, B: Mounted on the Bottom side)
S.=Surface mount

# BOARD LAYOUTS

## • MAIN UNIT (TOP VIEW)

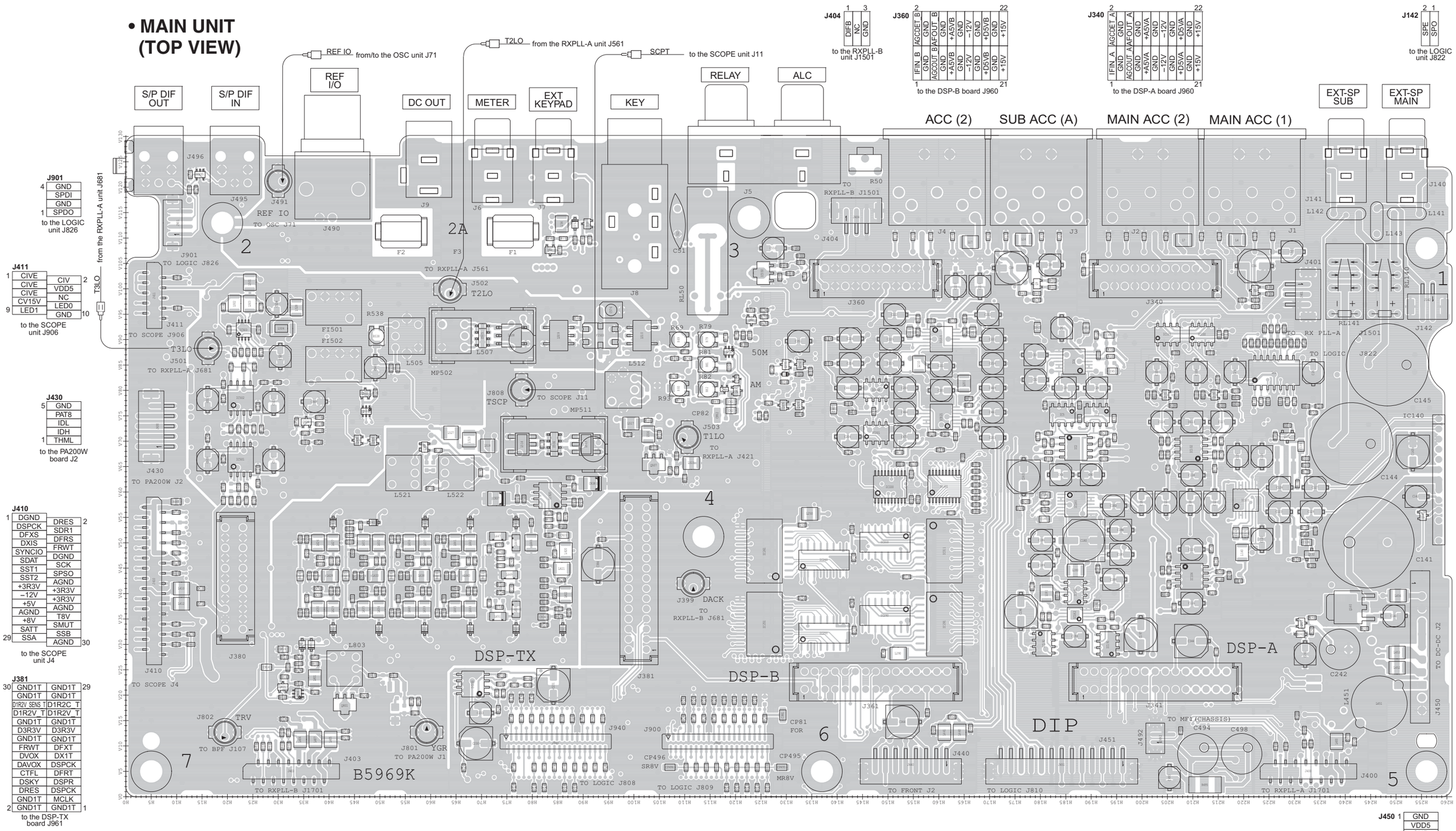

## • MAIN UNIT (BOTTOM VIEW)

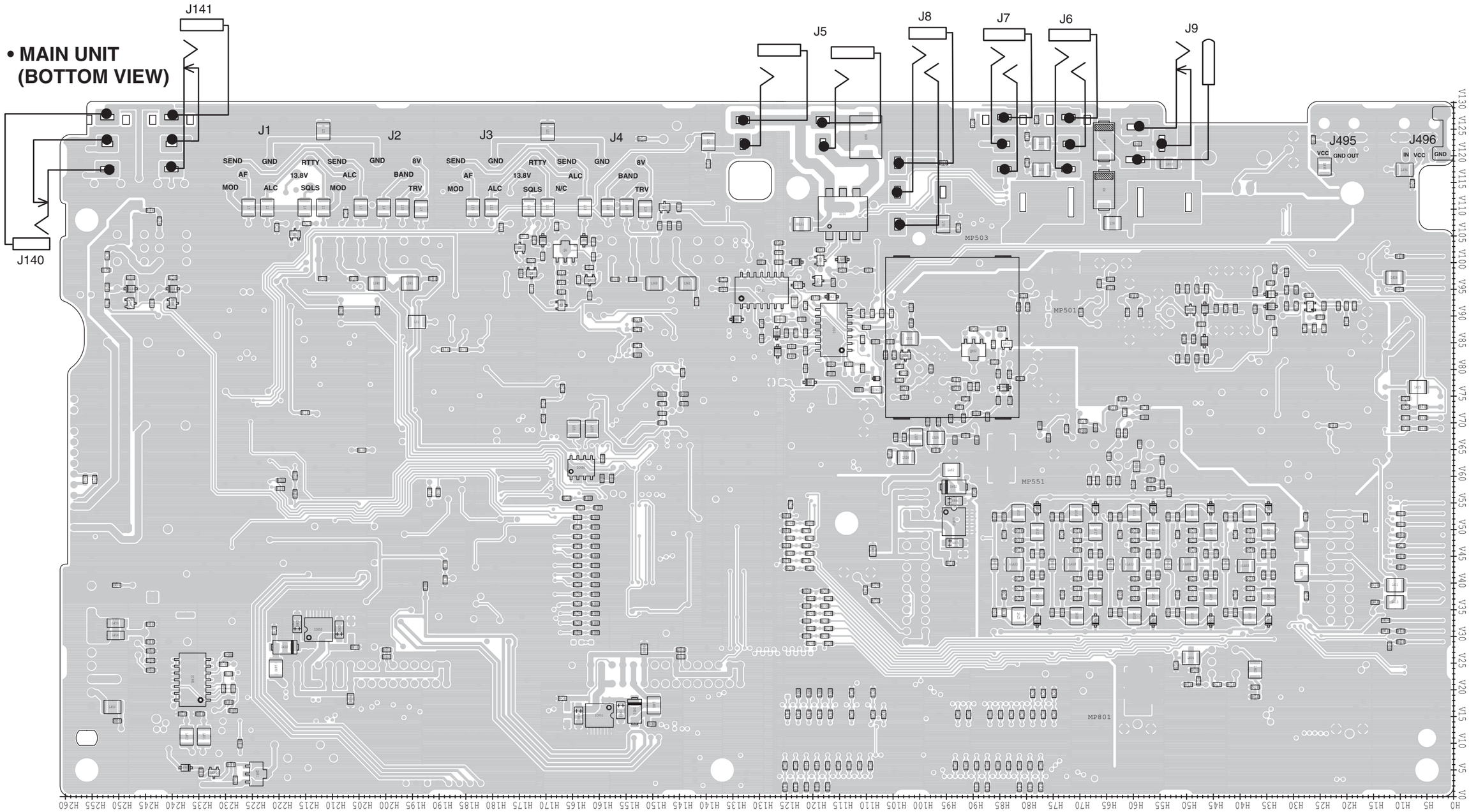

# VOLTAGE DIAGRAMS

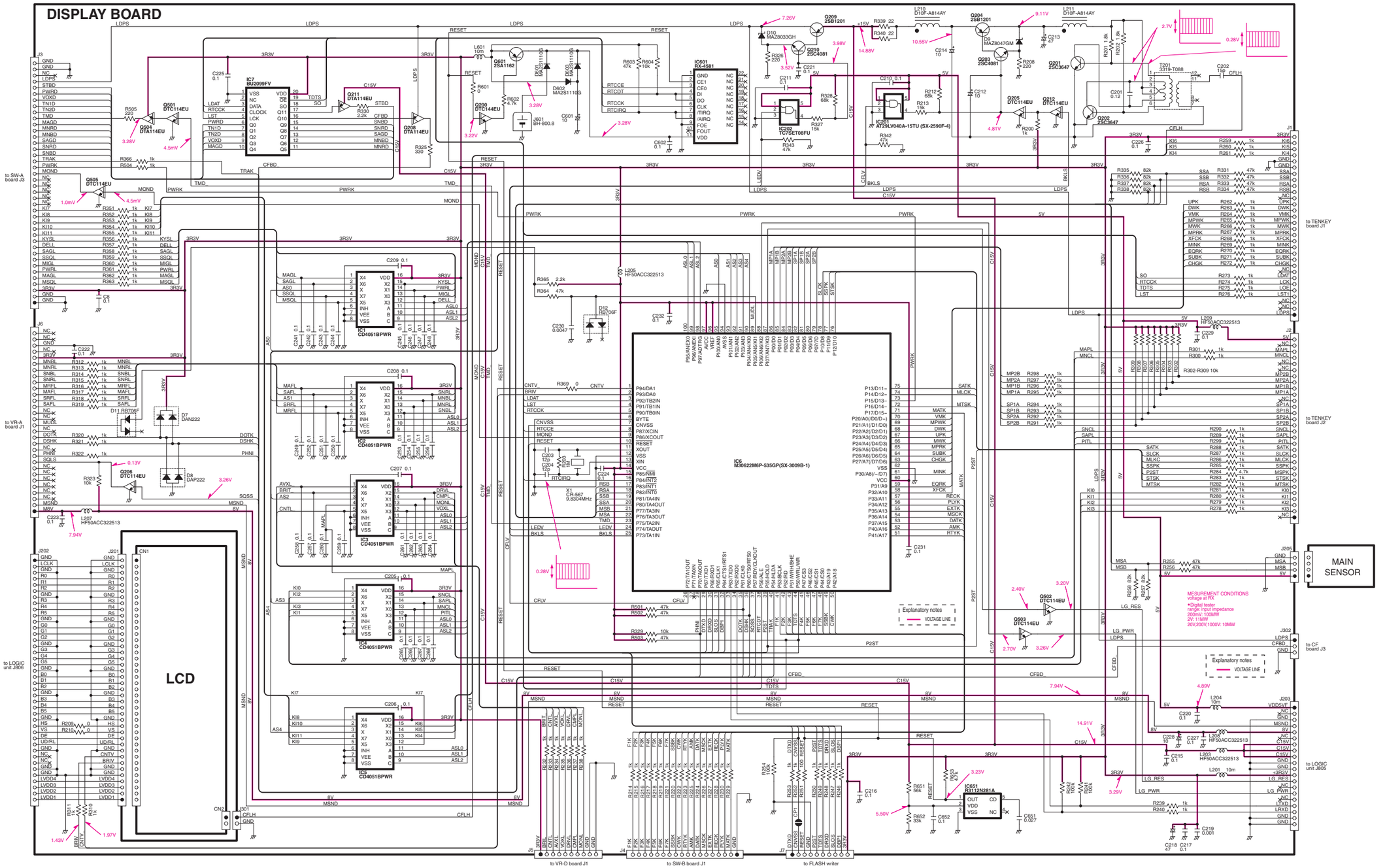

## LOGIC UNIT (1)

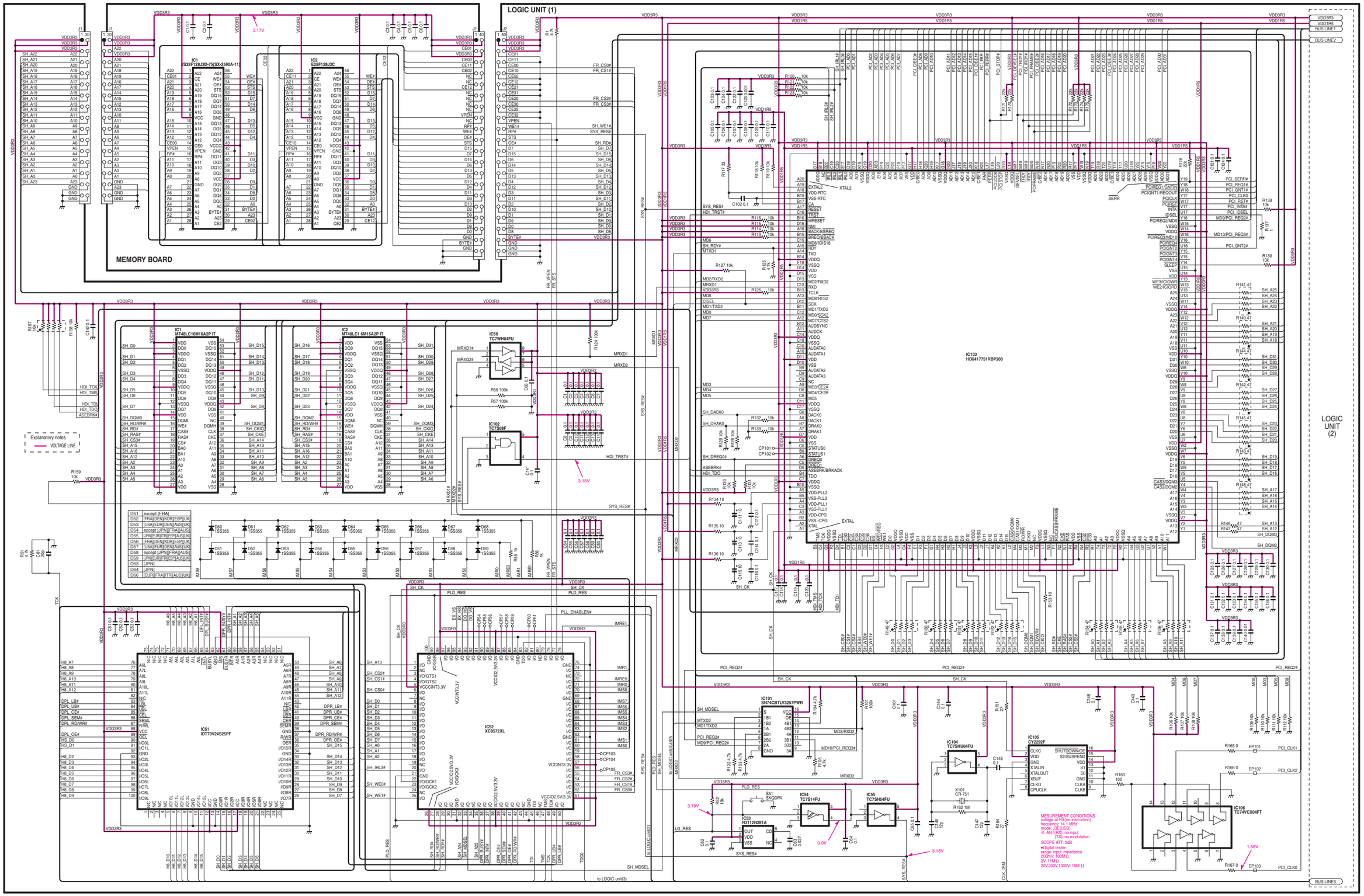
LOGIC UNIT (1)
MEMORY BOARD
LOGIC UNIT (2)
Explanatory notes
VOLTAGE LINE
IC103
HD6417751RBP200
IC51
ID770V24S25PF
IC52
XC9572XL
IC101
SN74CBTLV3257PWR
IC104
TC7SHU04FU
IC105
CY2292F
IC106
TC74VCX04FT
IC53
R3112N281A
IC54
TC7S14FU
IC55
TC7SH04FU
MESUREMENT CONDITIONS
voltage at RX(no instruction)
frequency: 14.1 MHz
mode: JSE(USB)
※ ANT(RX): no input
(TX): no modulation
SCOPE ATT: 0dB
•Digital tester
range: input impedance
200mV: 100MΩ
2V: 11MΩ
20V,200V,1000V: 10M Ω

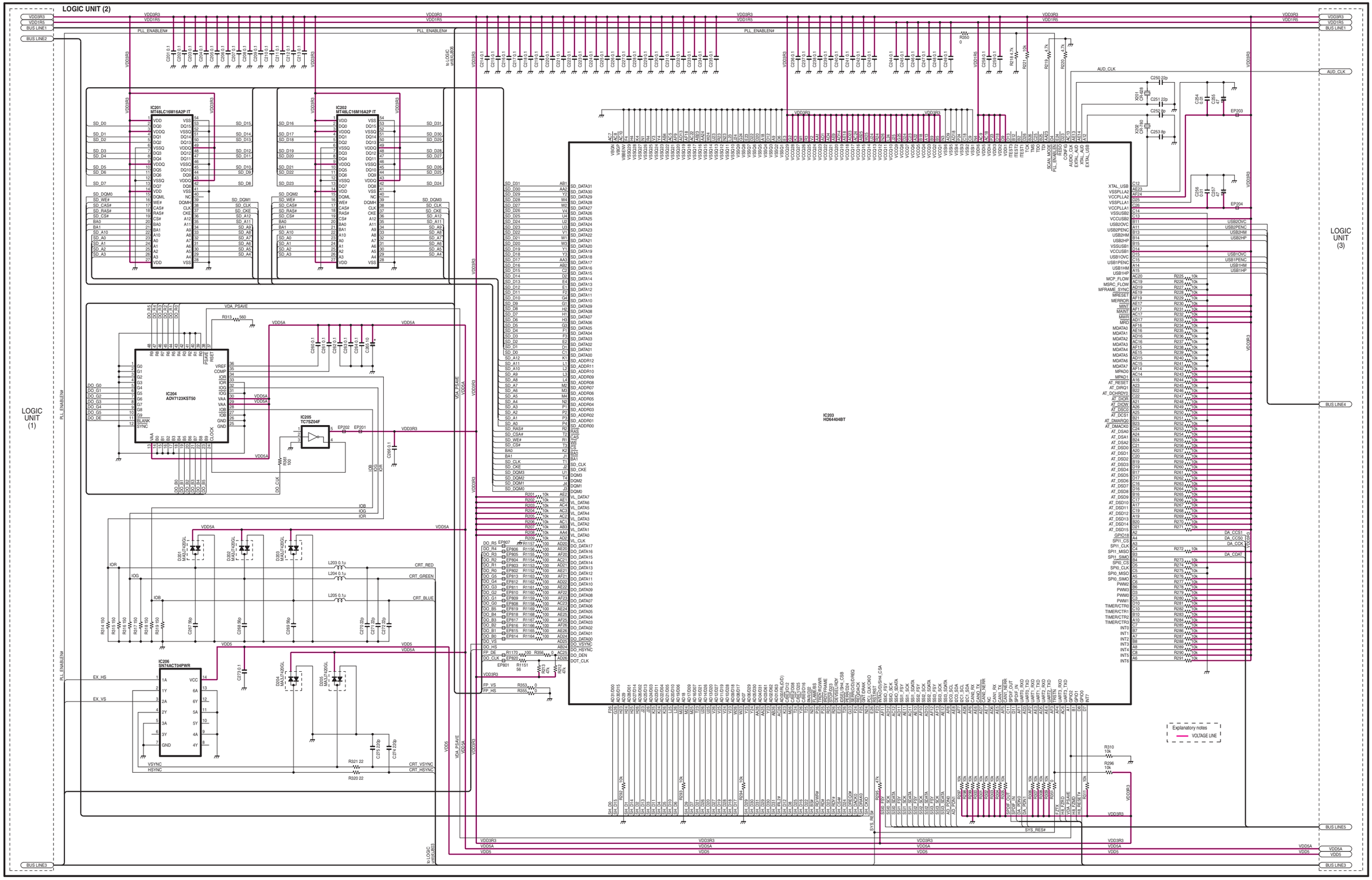
LOGIC UNIT (2)
LOGIC UNIT (1)
LOGIC UNIT (3)
IC201 MT48LC16M16A2P-IT
IC202 MT48LC16M16A2P-IT
IC203 HD64404BT
IC204 ADV7123KST50
IC205 TC7SZ04F
IC206 SN74ACT04PWR
VDD3R3
VDD1R5
VDD5A
VDD5
PLL_ENABLEN#
BUS LINE1
BUS LINE2
BUS LINE3
BUS LINE4
BUS LINE5
AUD_CLK
CRT_RED
CRT_GREEN
CRT_BLUE
CRT_VSYNC
CRT_HSYNC
SYS_RES#
Explanatory notes
VOLTAGE LINE

LOGIC UNIT (3)

LOGIC UNIT (2)

LOGIC UNIT (4)

IC401 PCI1410APGE

IC402 TPS2211AIDBR

IC403 BR93LC46FW

IC404 RTL8139C+

IC603 BU9480F

IC604 HD64F2377VFQ33V

IC605 XC9572XL

IC610 R1EX24064ATA00A

IC207 TC7W04F

IC208 μPD16875G

IC209 AK5355VT

IC210 AK5355VT

IC211 AK4384VT

IC212 AK4384VT

IC601 TC7SH04FU

IC602 TC7SET04FU

Q601 2SC4081

Q602 2SA1576

MESUREMENT CONDITIONS
voltage at RX(no instruction)
frequency: 14.1 MHz
mode: J3E(USB)
※ ANT(RX): no input
(TX): no modulation
SCOPE ATT: 0dB
•Digital tester
range: input impedance
200mV: 100MΩ
2V: 11MΩ
20V,200V,1000V: 10M Ω

Explanatory notes
VOLTAGE LINE

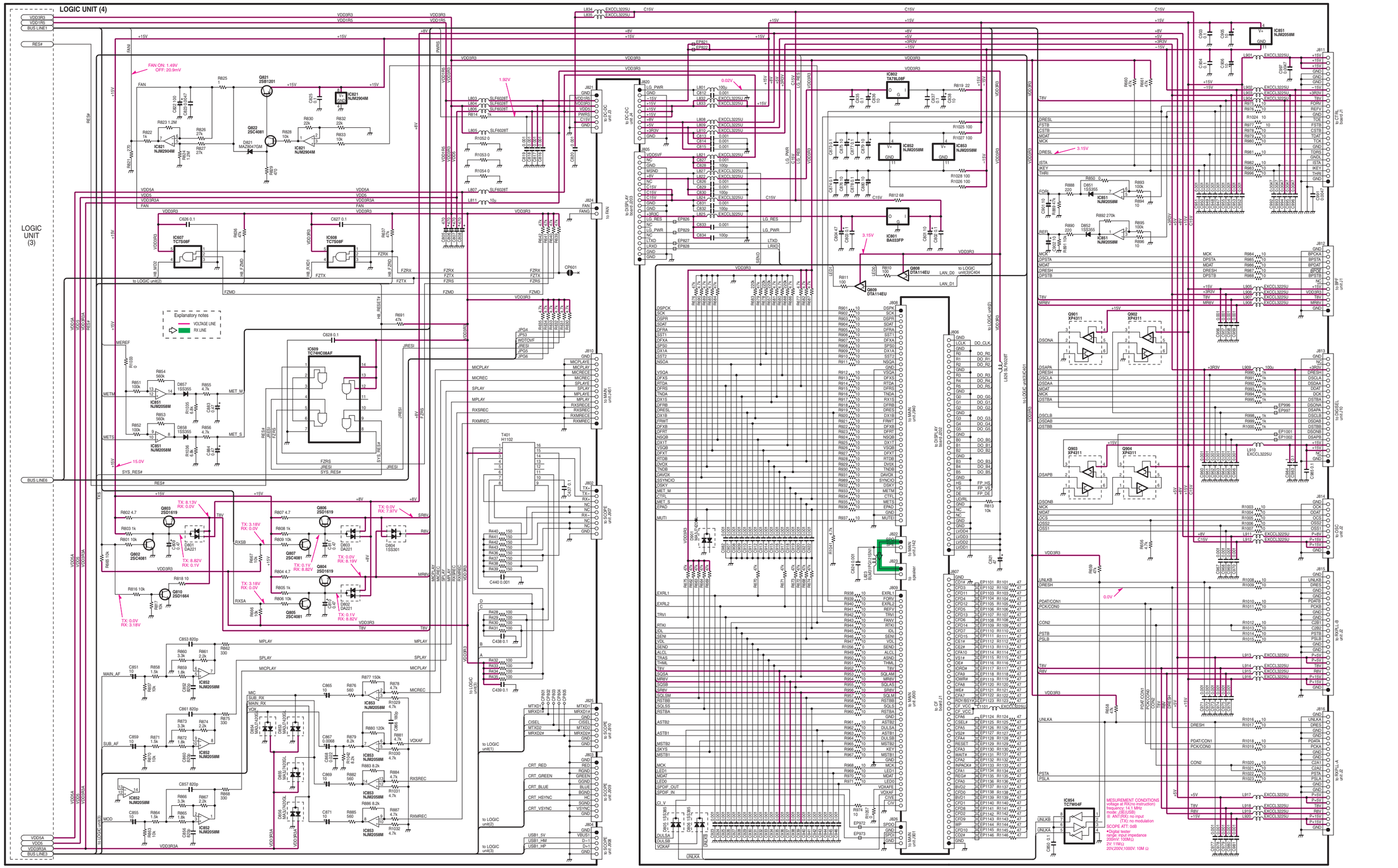
LOGIC UNIT (4)
LOGIC UNIT (3)
Explanatory notes
VOLTAGE LINE
RX LINE
FAN ON: 1.49V
OFF: 20.9mV
TX: 8.13V
RX: 0.0V
TX: 3.18V
RX: 0.0V
TX: 8.82V
RX: 0.1V
TX: 0.0V
RX: 3.18V
TX: 0.1V
RX: 8.82V
TX: 0.0V
RX: 8.19V
TX: 0.1V
RX: 8.82V
TX: 0.0V
RX: 7.97V
1.92V
0.02V
3.15V
3.15V
0.0V
15.0V
MESUREMENT CONDITIONS
voltage at RX(no instruction)
frequency: 14.1 MHz
mode: J3E(USB)
※ ANT(RX): no input
(TX): no modulation
SCOPE ATT: 0dB
•Digital tester
range: input impedance
200mV: 100MΩ
2V: 11MΩ
20V,200V,1000V: 10M Ω

MAIN UNIT (1)

MAIN UNIT (2)

BUS LINE1 BUS LINE2 BUS LINE3 BUS LINE4

Explanatory notes
VOLTAGE LINE
TX LINE
RX LINE

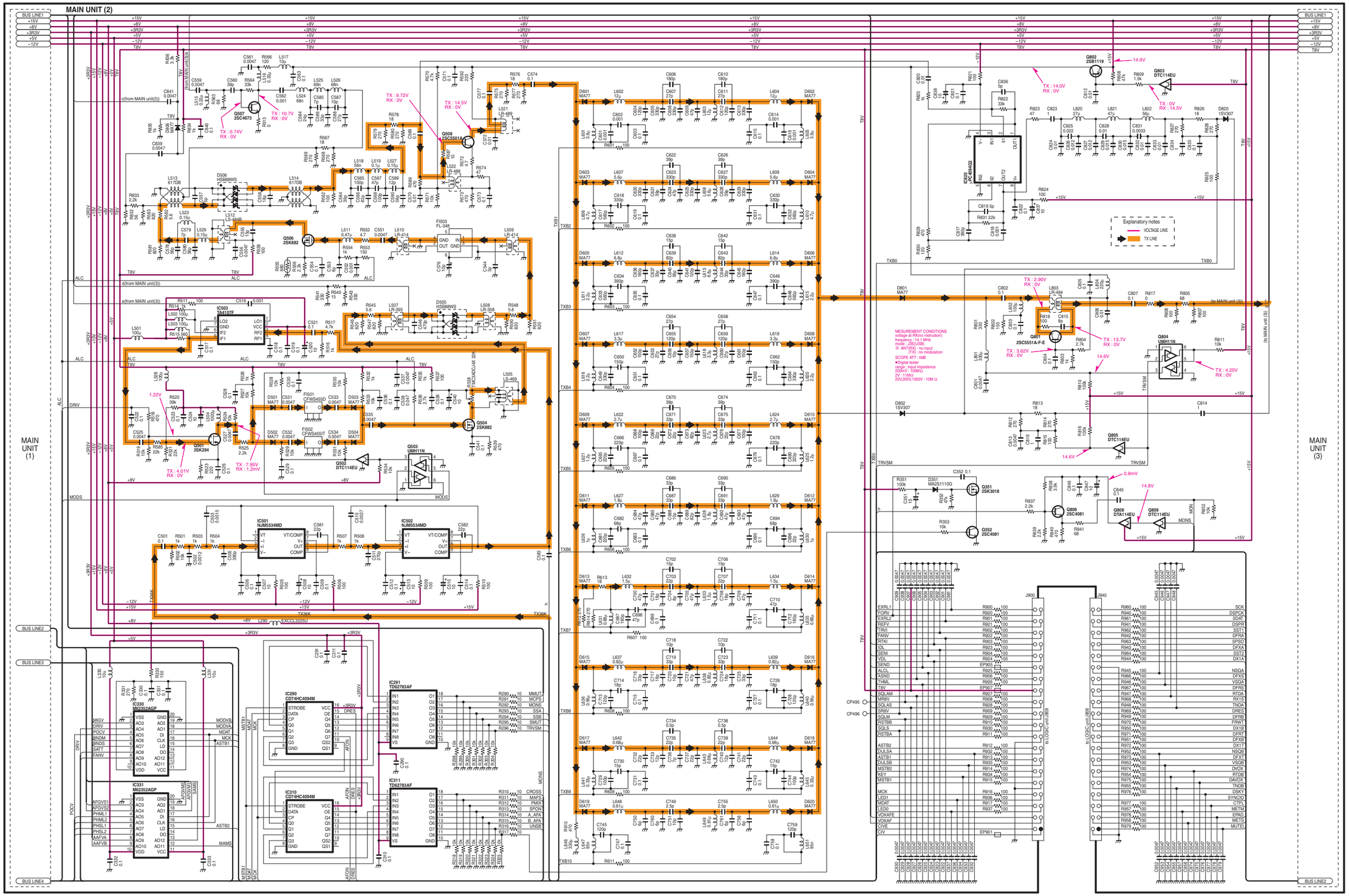
MAIN UNIT (2)
MAIN UNIT (1)
MAIN UNIT (3)
Explanatory notes
VOLTAGE LINE
TX LINE
MESUREMENT CONDITIONS
voltage at RX(no instruction)
frequency : 14.1 MHz
mode : JSE(USB)
※ ANT(RX) : no input
(TX) : no modulation
SCOPE ATT : 0dB
●Digital tester
range : input impedance
200mV : 100MΩ
2V : 11MΩ
20V,200V,1000V : 10M Ω
BUS LINE1
BUS LINE2
BUS LINE3
BUS LINE4
to LOGIC unit J809
to LOGIC unit J808

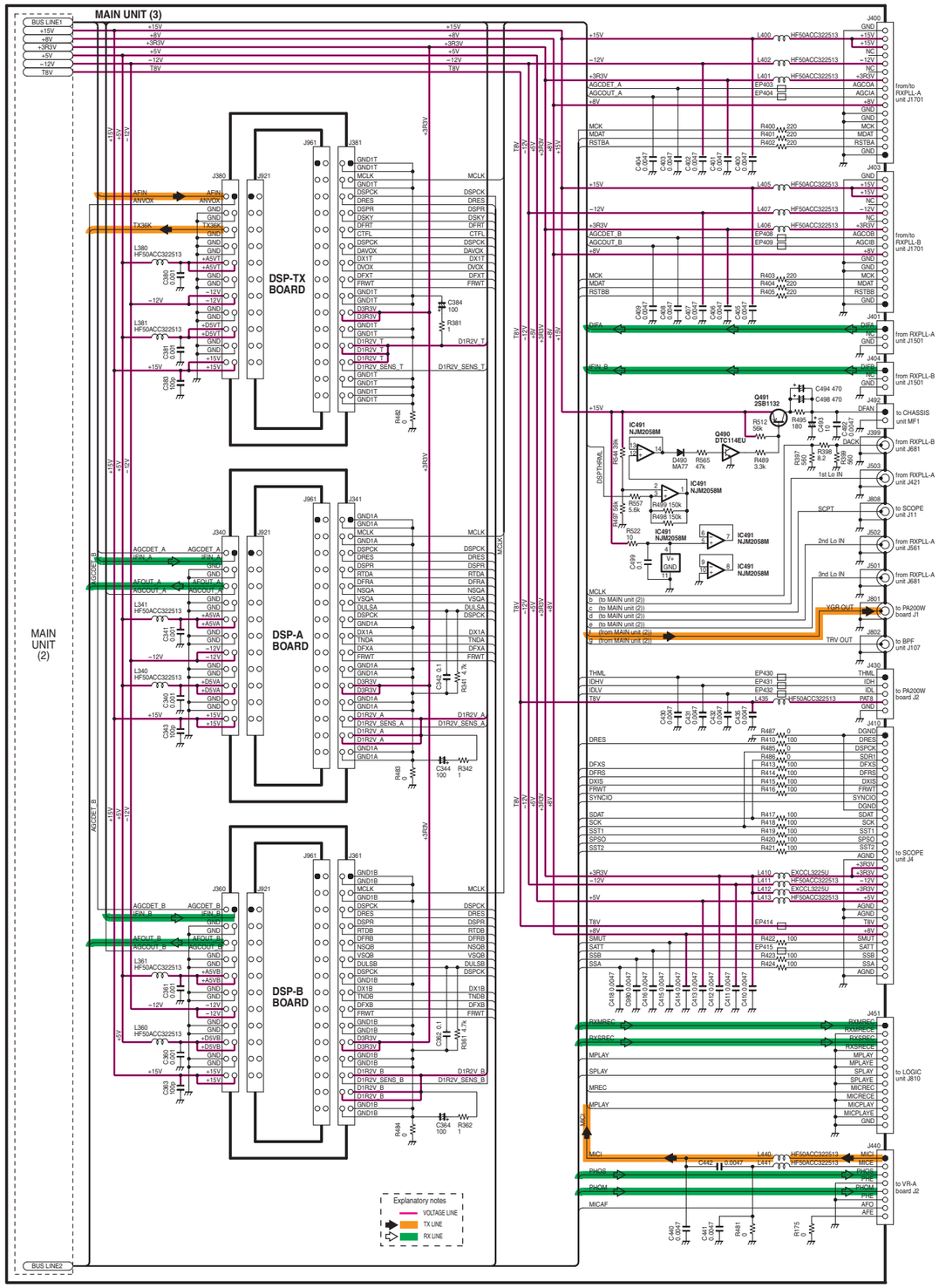
MAIN UNIT (3)
BUS LINE1
DSP-TX BOARD
DSP-A BOARD
DSP-B BOARD
MAIN UNIT (2)
BUS LINE2
Explanatory notes
VOLTAGE LINE
TX LINE
RX LINE
from/to RXPLL-A unit J1701
from/to RXPLL-B unit J1701
from RXPLL-A unit J1501
from RXPLL-B unit J1501
to CHASSIS unit MF1
from RXPLL-B unit J681
from RXPLL-A unit J421
to SCOPE unit J11
from RXPLL-A unit J561
from RXPLL-A unit J681
to PA200W board J1
to BPF unit J107
to PA200W board J2
to SCOPE unit J4
to LOGIC unit J810
to VR-A board J2

# RXPLL-A/B UNIT (1)

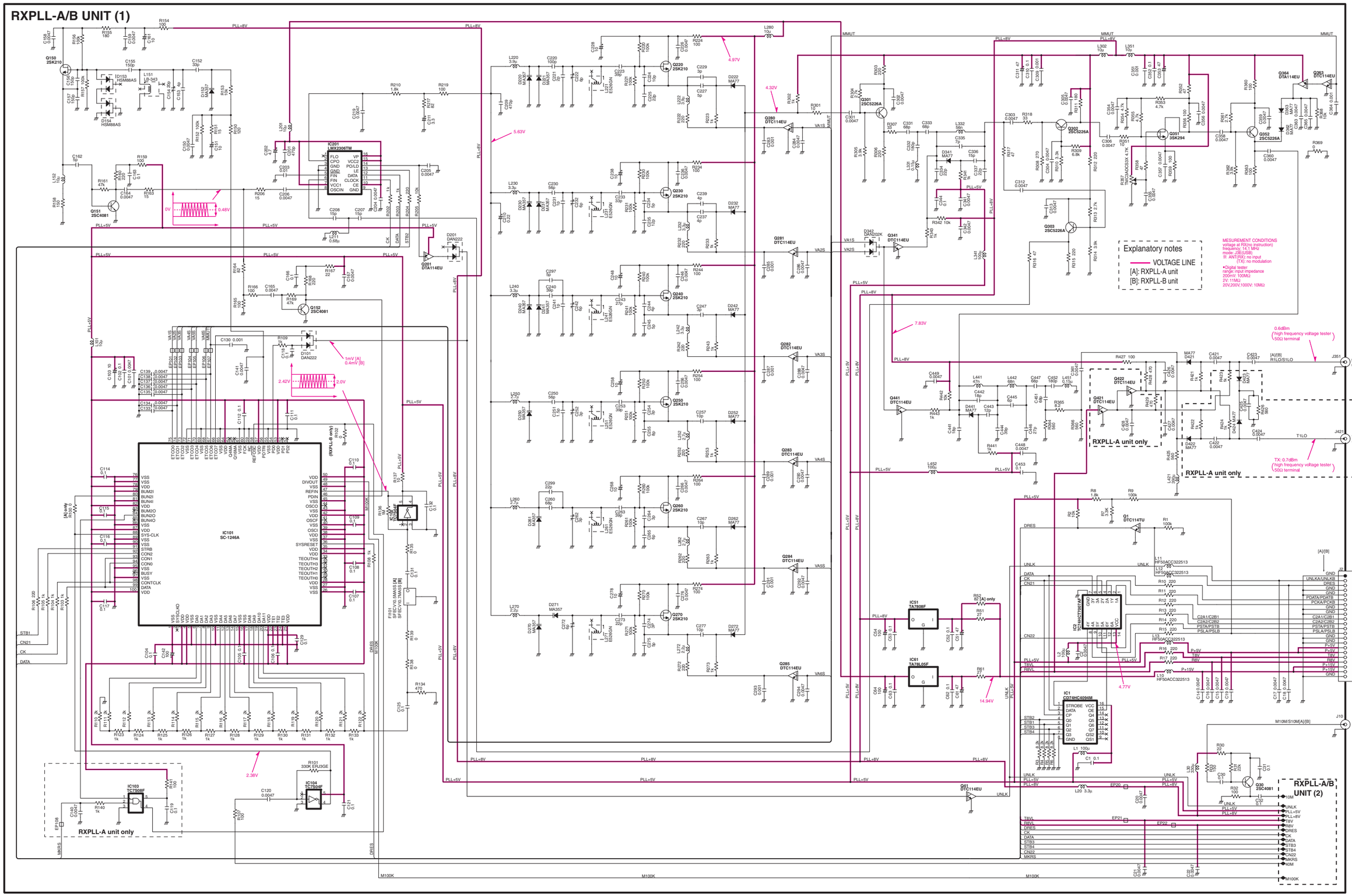

## RXPLL-A/B UNIT (2)

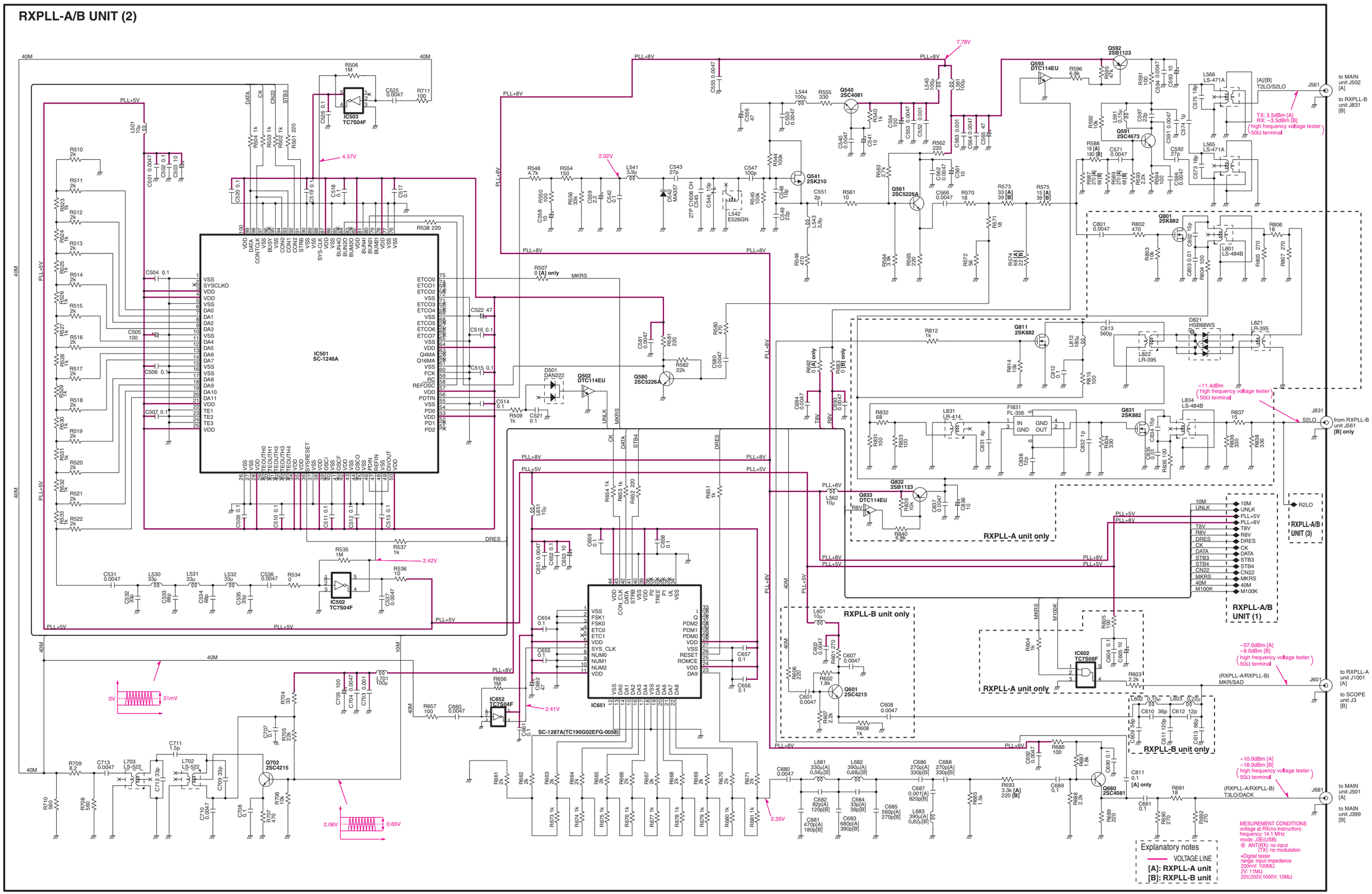

# RXPLL-A/B UNIT (3)

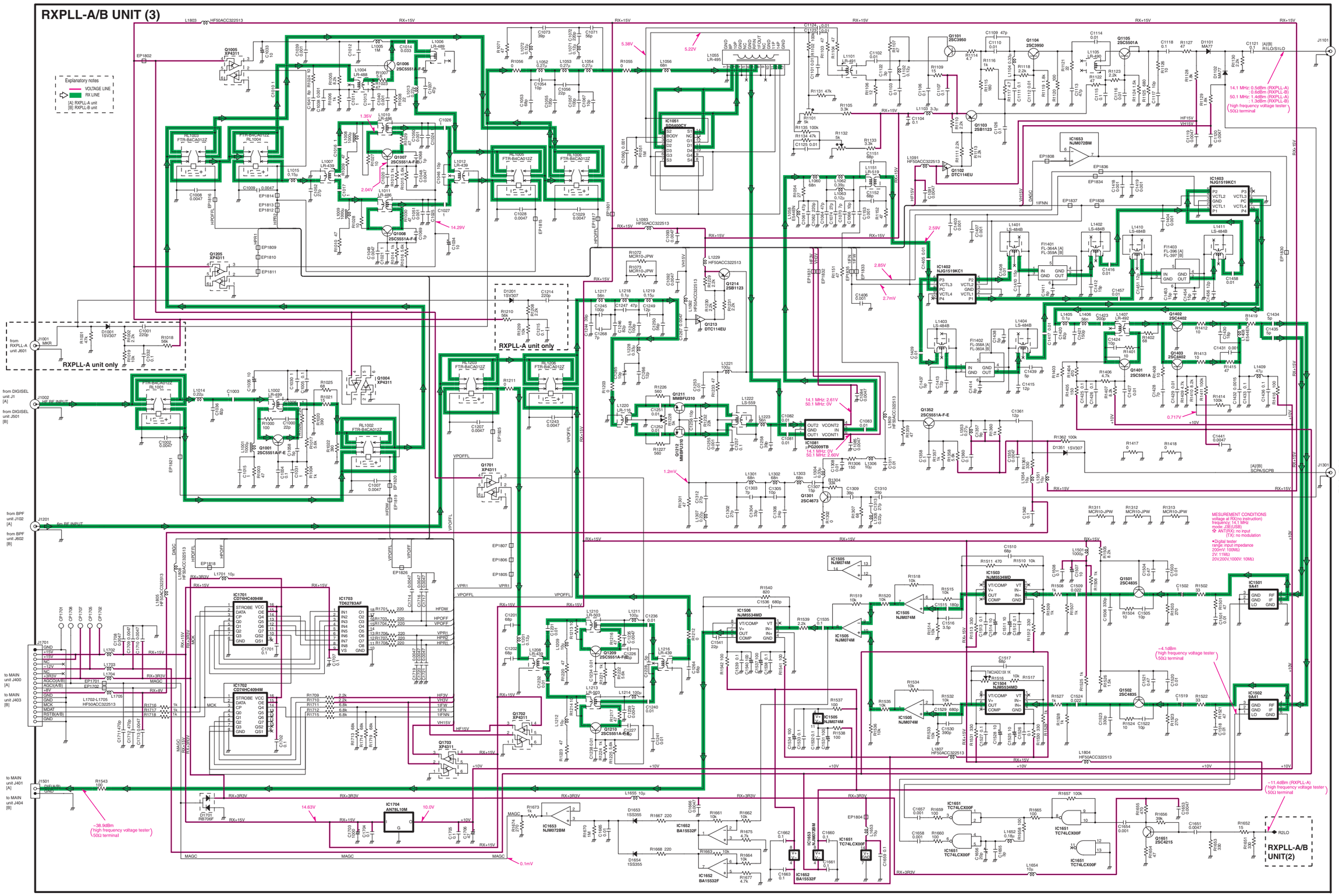

# CTRL BOARD

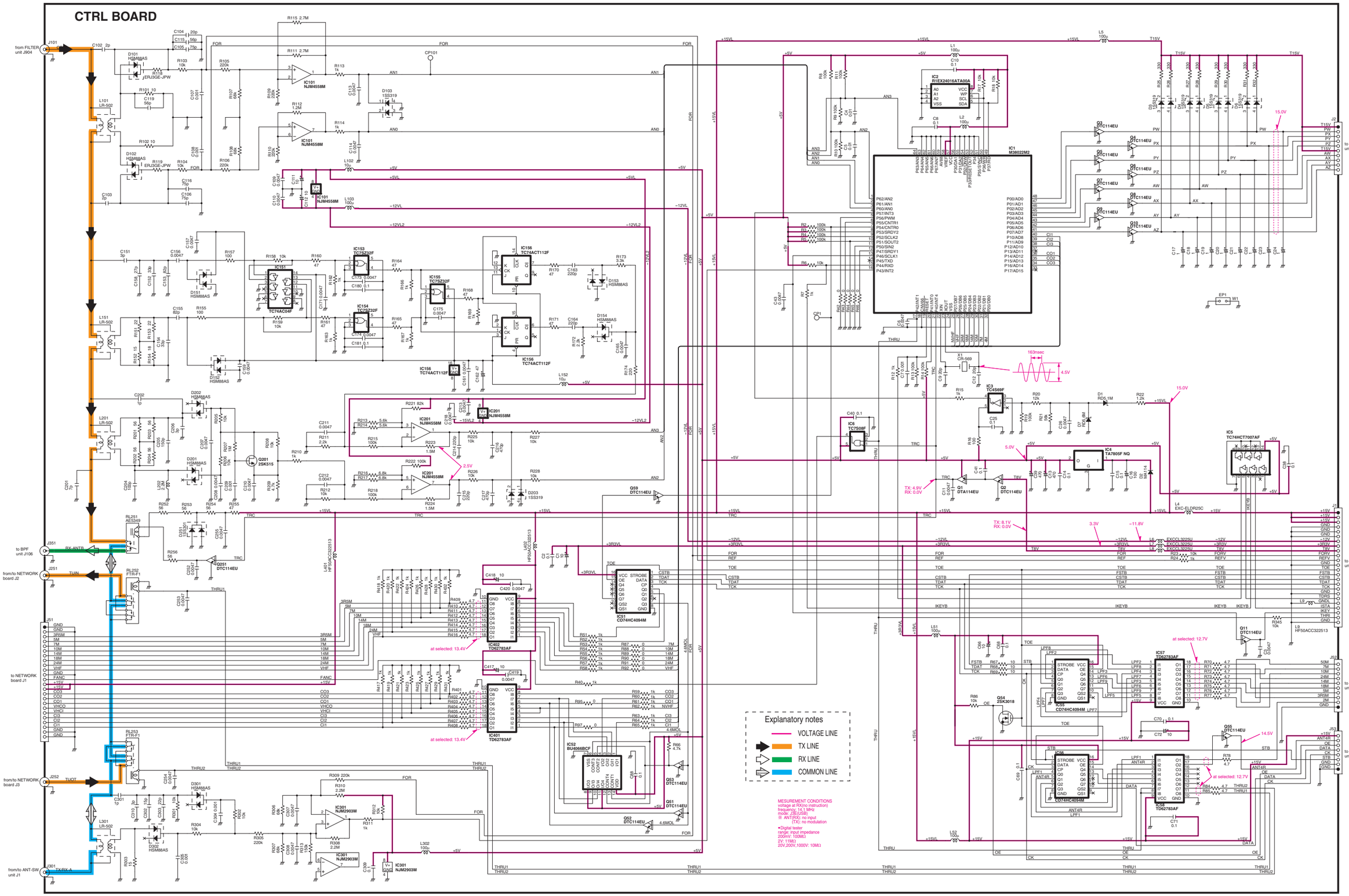
Explanatory notes
VOLTAGE LINE
TX LINE
RX LINE
COMMON LINE
MESUREMENT CONDITIONS
voltage at RX(no instruction)
frequency: 14.1 MHz
mode: J3E(USB)
※ ANT(RX): no input
(TX): no modulation
•Digital tester
range, input impedance
200mV: 10MΩ
2V: 11MΩ
20V,200V,1000V: 10MΩ
TX: 4.9V
RX: 0.0V
TX: 8.1V
RX: 0.0V
3.3V
~11.8V
5.0V
15.0V
14.5V
163nsec
4.5V
2.5V
at selected: 13.4V
at selected: 12.7V
from FILTER unit J904
to BPF unit J106
from/to NETWORK board J2
from/to NETWORK board J1
from/to NETWORK board J3
from/to ANT-SW unit J1
to TUNER unit MF1,MF2
to LOGIC unit J811
to FILTER unit J902
to FILTER unit J905

Feb. 2009

# SERVICE MANUAL ADDENDUM

## IC-7800

**CONTENTS**

PARTS LIST . . . . . 1
BOARD LAYOUTS . . . . . 60
VOLTAGE DIAGRAM . . . . . 64

# PARTS LIST

## [VR-A BOARD]

| REF NO. | ORDER NO. | DESCRIPTION | M. | H/V LOCATION |
|---|---|---|---|---|
| R1 | 7210002890 | VAR RK1612210O5J/RV-308 | | |
| R2 | 7210002890 | VAR RK1612210O5J/RV-308 | | |
| R3 | 7210002890 | VAR RK1612210O5J/RV-308 | | |
| R4 | 7210002890 | VAR RK1612210O5J/RV-308 | | |
| R11 | 7030003520 | S.RES ERJ3GEYJ 472 V (4.7 k) | B | 44.6/27 |
| R12 | 7030003520 | S.RES ERJ3GEYJ 472 V (4.7 k) | B | 44.6/25.7 |
| R13 | 7030003520 | S.RES ERJ3GEYJ 472 V (4.7 k) | B | 59.4/29.9 |
| R14 | 7030003520 | S.RES ERJ3GEYJ 472 V (4.7 k) | B | 44.6/24.4 |
| R15 | 7030003520 | S.RES ERJ3GEYJ 472 V (4.7 k) | B | 44.6/21.8 |
| R16 | 7030003520 | S.RES ERJ3GEYJ 472 V (4.7 k) | B | 44.6/23.1 |
| R17 | 7030003520 | S.RES ERJ3GEYJ 472 V (4.7 k) | B | 63.2/9.5 |
| R18 | 7030003520 | S.RES ERJ3GEYJ 472 V (4.7 k) | B | 44.6/20.5 |
| R21 | 7030003860 | S.RES ERJ3GE JPW V | B | 49.7/41.4 |
| R22 | 7030003860 | S.RES ERJ3GE JPW V | B | 52.3/42.4 |
| R23 | 7030003860 | S.RES ERJ3GE JPW V | B | 62.8/42.9 |
| R24 | 7030003860 | S.RES ERJ3GE JPW V | B | 56.4/31.1 |
| R25 | 7030003860 | S.RES ERJ3GE JPW V | B | 52.3/44.4 |
| R26 | 7030003860 | S.RES ERJ3GE JPW V | B | 27.7/10.6 |
| C11 | 4030006880 | S.CER C1608 JB 1H 472K-T | B | 49.7/36.4 |
| C12 | 4030006880 | S.CER C1608 JB 1H 472K-T | B | 65.4/36.9 |
| C13 | 4030006880 | S.CER C1608 JB 1H 472K-T | B | 52.3/37.4 |
| C14 | 4030006880 | S.CER C1608 JB 1H 472K-T | B | 62.8/37.9 |
| C15 | 4030006880 | S.CER C1608 JB 1H 472K-T | B | 49.7/38.4 |
| C16 | 4030006880 | S.CER C1608 JB 1H 472K-T | B | 65.4/38.9 |
| C17 | 4030006880 | S.CER C1608 JB 1H 472K-T | B | 52.3/39.4 |
| C18 | 4030006880 | S.CER C1608 JB 1H 472K-T | B | 62.8/39.9 |
| J1 | 6510021721 | S.CNR 30FLT-SM2-TB (LF) (SN) | B | 57.6/41.1 |
| J2 | 6510018921 | S.CNR B8B-PH-SM4-TB (LF) (SN) | B | 20/4.5 |
| J3 | 6510019971 | S.CNR 52808-1071 | B | 9.5/33.1 |
| J4 | 6510019971 | S.CNR 52808-1071 | B | 9.5/17.9 |
| EP2 | 6910012350 | S.BEA MMZ1608Y 102BT | B | 13.6/29.6 |
| EP3 | 6910012350 | S.BEA MMZ1608Y 102BT | B | 16.5/30.6 |
| EP5 | 6910012350 | S.BEA MMZ1608Y 102BT | B | 16.5/32.6 |
| EP6 | 6910012350 | S.BEA MMZ1608Y 102BT | B | 13.7/34.7 |
| EP7 | 6910012350 | S.BEA MMZ1608Y 102BT | B | 13.7/36.6 |
| EP8 | 6910012350 | S.BEA MMZ1608Y 102BT | B | 16.5/35.7 |
| EP9 | 6910012350 | S.BEA MMZ1608Y 102BT | B | 13.7/33.4 |
| EP10 | 6910012350 | S.BEA MMZ1608Y 102BT | B | 13.6/23.7 |
| EP11 | 6910012350 | S.BEA MMZ1608Y 102BT | B | 13.6/22.4 |
| EP12 | 6910012350 | S.BEA MMZ1608Y 102BT | B | 5.3/21.5 |
| EP13 | 6910012350 | S.BEA MMZ1608Y 102BT | B | 13.6/20.4 |
| EP14 | 6910012350 | S.BEA MMZ1608Y 102BT | B | 5.3/19.3 |
| EP15 | 6910012350 | S.BEA MMZ1608Y 102BT | B | 13.6/18.4 |
| EP16 | 6910012350 | S.BEA MMZ1608Y 102BT | B | 16.1/17.4 |
| EP17 | 6910012350 | S.BEA MMZ1608Y 102BT | B | 13.6/16.4 |
| EP18 | 6910012350 | S.BEA MMZ1608Y 102BT | B | 16.1/15.5 |
| EP19 | 6910012350 | S.BEA MMZ1608Y 102BT | B | 13.6/14.6 |
| EP20 | 6910012350 | S.BEA MMZ1608Y 102BT | B | 12.5/13.2 |
| EP21 | 6910012350 | S.BEA MMZ1608Y 102BT | B | 13.6/25 |

## [VR-B BOARD]

| REF NO. | ORDER NO. | DESCRIPTION | M. | H/V LOCATION |
|---|---|---|---|---|
| R1 | 7210003160 | VAR RV-317 (RK0972210) | | |
| R2 | 7210003160 | VAR RV-317 (RK0972210) | | |
| R3 | 7030003520 | S.RES ERJ3GEYJ 472 V (4.7 k) | T | 28.6/2.7 |
| R4 | 7030003520 | S.RES ERJ3GEYJ 472 V (4.7 k) | T | 27.8/8.4 |
| R5 | 7030003520 | S.RES ERJ3GEYJ 472 V (4.7 k) | T | 10.5/2.7 |
| R6 | 7030003520 | S.RES ERJ3GEYJ 472 V (4.7 k) | T | 11.1/8.4 |
| C1 | 4030006880 | S.CER C1608 JB 1H 472K-T | T | 12.4/8.4 |
| C2 | 4030006880 | S.CER C1608 JB 1H 472K-T | T | 11.8/2.7 |
| C3 | 4030006880 | S.CER C1608 JB 1H 472K-T | T | 26.5/8.4 |
| C4 | 4030006880 | S.CER C1608 JB 1H 472K-T | T | 27.3/2.7 |
| J1 | 6510019971 | S.CNR 52808-1071 | T | 19.5/5 |

## [VR-C BOARD]

| REF NO. | ORDER NO. | DESCRIPTION | M. | H/V LOCATION |
|---|---|---|---|---|
| R1 | 7210003160 | VAR RV-317 (RK0972210) | | |
| R2 | 7210003160 | VAR RV-317 (RK0972210) | | |
| R3 | 7030003520 | S.RES ERJ3GEYJ 472 V (4.7 k) | T | 28.6/2.7 |
| R4 | 7030003520 | S.RES ERJ3GEYJ 472 V (4.7 k) | T | 27.8/8.4 |
| R5 | 7030003520 | S.RES ERJ3GEYJ 472 V (4.7 k) | T | 10.5/2.7 |
| R6 | 7030003520 | S.RES ERJ3GEYJ 472 V (4.7 k) | T | 11.1/8.4 |
| C1 | 4030006880 | S.CER C1608 JB 1H 472K-T | T | 12.4/8.4 |
| C2 | 4030006880 | S.CER C1608 JB 1H 472K-T | T | 11.8/2.7 |
| C3 | 4030006880 | S.CER C1608 JB 1H 472K-T | T | 26.5/8.4 |
| C4 | 4030006880 | S.CER C1608 JB 1H 472K-T | T | 27.3/2.7 |
| J1 | 6510019971 | S.CNR 52808-1071 | T | 19.5/5 |

## [VR-D BOARD]

| REF NO. | ORDER NO. | DESCRIPTION | M. | H/V LOCATION |
|---|---|---|---|---|
| R1 | 7210001130 | VAR RK097111T005A (10KB) | | |
| R2 | 7210001130 | VAR RK097111T005A (10KB) | | |
| R3 | 7210001130 | VAR RK097111T005A (10KB) | | |
| R4 | 7210001130 | VAR RK097111T005A (10KB) | | |
| R5 | 7210001130 | VAR RK097111T005A (10KB) | | |
| R6 | 7210001130 | VAR RK097111T005A (10KB) | | |
| R7 | 7210001130 | VAR RK097111T005A (10KB) | | |
| R11 | 7030003520 | S.RES ERJ3GEYJ 472 V (4.7 k) | B | 11.3/3.6 |
| R12 | 7030003520 | S.RES ERJ3GEYJ 472 V (4.7 k) | B | 28.4/3.6 |
| R13 | 7030003520 | S.RES ERJ3GEYJ 472 V (4.7 k) | B | 45.2/3.6 |
| R14 | 7030003520 | S.RES ERJ3GEYJ 472 V (4.7 k) | B | 62.3/3.6 |
| R15 | 7030003520 | S.RES ERJ3GEYJ 472 V (4.7 k) | B | 79.2/3.6 |
| R16 | 7030003520 | S.RES ERJ3GEYJ 472 V (4.7 k) | B | 96.3/3.6 |
| R17 | 7030003520 | S.RES ERJ3GEYJ 472 V (4.7 k) | B | 100.5/6.5 |
| C11 | 4030006880 | S.CER C1608 JB 1H 472K-T | B | 11.3/2 |
| C12 | 4030006880 | S.CER C1608 JB 1H 472K-T | B | 28.4/2 |
| C13 | 4030006880 | S.CER C1608 JB 1H 472K-T | B | 45.2/2 |
| C14 | 4030006880 | S.CER C1608 JB 1H 472K-T | B | 62.3/2 |
| C15 | 4030006880 | S.CER C1608 JB 1H 472K-T | B | 79.2/2 |
| C16 | 4030006880 | S.CER C1608 JB 1H 472K-T | B | 96.3/2 |
| C17 | 4030006880 | S.CER C1608 JB 1H 472K-T | B | 100.5/4.9 |
| J1 | 6510019971 | S.CNR 52808-1071 | B | 43/16 |

## [FRONT UNIT]

| REF NO. | ORDER NO. | DESCRIPTION | M. | H/V LOCATION |
|---|---|---|---|---|
| W1 | 8900015930 | CBL OPC-886A (P1,N10,L75) | | |
| W2 | 8900015930 | CBL OPC-886A (P1,N10,L75) | | |
| W3 | 8900012870 | CBL OPC-1331 (N=40,L=70) | | |
| W4 | 8900008670 | CBL OPC-849 (N:30 L:70) | | |
| W5 | 8900015930 | CBL OPC-886A (P1,N10,L75) | | |
| W6 | 8900015930 | CBL OPC-886A (P1,N10,L75) | | |
| W7 | 8900012880 | CBL OPC-1336 (N=18,L=70) | | |
| W8 | 8900015930 | CBL OPC-886A (P1,N10,L75) | | |
| W9 | 8900014871 | CBL OPC-1332A-1 (P0.5,N40,L100) | | |
| W10 | 8900014730 | CBL OPC-683A (P1,N10,L110) | | |
| W11 | 8900008670 | CBL OPC-849 (N:30 L:70) | | |
| W12 | 8900008670 | CBL OPC-849 (N:30 L:70) | | |
| W13 | 8900015930 | CBL OPC-886A (P1,N10,L75) | | |
| W14 | 8900008670 | CBL OPC-849 (N:30 L:70) | | |
| W15 | 8900015930 | CBL OPC-886A (P1,N10,L75) | | |
| W51 | 9025900020 | | | |
| EP1 | 6910015291 | UBD LTA070B790F | | |
| EP11 | 6910011090 | SUT RMS20-250-201-P | | |
| EP12 | 6910011090 | SUT RMS20-250-201-P | | |
| EP13 | 0880001460 | UBD EX-2500 #03 | | |
| EP101 | 6910015650 | E.OTH S-G2218-3#01 (MOUNT PLATE) | | |
| EP102 | 6910015650 | E.OTH S-G2218-3#01 (MOUNT PLATE) | | |

M.=Mounted side (T: Mounted on the Top side, B: Mounted on the Bottom side)
S.=Surface mount

## [SW-A BOARD]

| REF NO. | ORDER NO. | DESCRIPTION | | M. | H/V LOCATION |
|---|---|---|---|---|---|
| R2 | 7030003400 | S.RES | ERJ3GEYJ 471 V (470) | B | 8.3/85.5 |
| R3 | 7030003420 | S.RES | ERJ3GEYJ 681 V (680) | B | 8.3/53.1 |
| R4 | 7030003400 | S.RES | ERJ3GEYJ 471 V (470) | B | 8.3/56.1 |
| R6 | 7030003400 | S.RES | ERJ3GEYJ 471 V (470) | B | 26.8/42.4 |
| R7 | 7030003400 | S.RES | ERJ3GEYJ 471 V (470) | B | 33/41.6 |
| R8 | 7030003400 | S.RES | ERJ3GEYJ 471 V (470) | B | 51.6/40.4 |
| R9 | 7030003400 | S.RES | ERJ3GEYJ 471 V (470) | B | 62.5/36 |
| R10 | 7030003400 | S.RES | ERJ3GEYJ 471 V (470) | B | 75.6/36 |
| R11 | 7030003400 | S.RES | ERJ3GEYJ 471 V (470) | B | 90/37.5 |
| R12 | 7030003400 | S.RES | ERJ3GEYJ 471 V (470) | B | 57.8/82.8 |
| R13 | 7030003480 | S.RES | ERJ3GEYJ 222 V (2.2 k) | B | 3.6/40.8 |
| R14 | 7030003520 | S.RES | ERJ3GEYJ 472 V (4.7 k) | B | 48.4/80.4 |
| R15 | 7030003480 | S.RES | ERJ3GEYJ 222 V (2.2 k) | B | 29.6/39.4 |
| R16 | 7030003520 | S.RES | ERJ3GEYJ 472 V (4.7 k) | B | 41.1/39.4 |
| R17 | 7030003480 | S.RES | ERJ3GEYJ 222 V (2.2 k) | B | 66.3/36 |
| R18 | 7030003520 | S.RES | ERJ3GEYJ 472 V (4.7 k) | B | 79.5/38.1 |
| R19 | 7030003540 | S.RES | ERJ3GEYJ 682 V (6.8 k) | B | 57.3/40.5 |
| R20 | 7030003540 | S.RES | ERJ3GEYJ 682 V (6.8 k) | B | 29.6/40.7 |
| R21 | 7030003540 | S.RES | ERJ3GEYJ 682 V (6.8 k) | B | 2.4/38.1 |
| R22 | 7030003480 | S.RES | ERJ3GEYJ 222 V (2.2 k) | B | 100.2/66.5 |
| R23 | 7030003520 | S.RES | ERJ3GEYJ 472 V (4.7 k) | B | 101.5/63.3 |
| R24 | 7030003580 | S.RES | ERJ3GEYJ 153 V (15 k) | B | 98.6/41.5 |
| R25 | 7030003480 | S.RES | ERJ3GEYJ 222 V (2.2 k) | B | 100.3/19.2 |
| R26 | 7030003520 | S.RES | ERJ3GEYJ 472 V (4.7 k) | B | 100.3/7.2 |
| R27 | 7030003540 | S.RES | ERJ3GEYJ 682 V (6.8 k) | B | 98.6/77.5 |
| R28 | 7030003540 | S.RES | ERJ3GEYJ 682 V (6.8 k) | B | 96.2/35.2 |
| R29 | 7030003580 | S.RES | ERJ3GEYJ 153 V (15 k) | B | 51.2/53.1 |
| R30 | 7030003400 | S.RES | ERJ3GEYJ 471 V (470) | B | 47/58 |
| C1 | 4030011600 | S.CER | C1608 JB 1E 104K-T | B | 99.2/63 |
| C2 | 4030011600 | S.CER | C1608 JB 1E 104K-T | B | 88.8/59.1 |
| C3 | 4030011600 | S.CER | C1608 JB 1E 104K-T | B | 99.4/60.4 |
| C4 | 4030011600 | S.CER | C1608 JB 1E 104K-T | B | 90.1/59.1 |
| C5 | 4030011600 | S.CER | C1608 JB 1E 104K-T | B | 98.9/59 |
| C6 | 4030011600 | S.CER | C1608 JB 1E 104K-T | B | 53.3/77.2 |
| C7 | 4030011600 | S.CER | C1608 JB 1E 104K-T | B | 84.8/80.1 |
| C8 | 4030011600 | S.CER | C1608 JB 1E 104K-T | B | 83.5/65.3 |
| C9 | 4030011600 | S.CER | C1608 JB 1E 104K-T | B | 88/52.2 |
| J1 | 6510019971 | S.CNR | 52808-1071 | B | 46.7/72.7 |
| J2 | 6510019971 | S.CNR | 52808-1071 | B | 83.7/72.7 |
| J3 | 6510022471 | S.CNR | 40FLT-SM2-TB (LF) (SN) | B | 94.3/58.7 |
| DS5 | 5040002980 | S.LED | SML-512DW-T86 | T | 8.5/87.6 |
| DS6 | 5040002930 | S.LED | SML-512MW T86 | T | 8.5/86.3 |
| DS7 | 5040002930 | S.LED | SML-512MW T86 | T | 8.5/41.4 |
| DS8 | 5040002930 | S.LED | SML-512MW T86 | T | 26.2/43 |
| DS9 | 5040002930 | S.LED | SML-512MW T86 | T | 37.7/43 |
| DS10 | 5040002930 | S.LED | SML-512MW T86 | T | 49.2/43 |
| DS11 | 5040002930 | S.LED | SML-512MW T86 | T | 63.2/43 |
| DS12 | 5040002930 | S.LED | SML-512MW T86 | T | 56.2/84.4 |
| DS13 | 5040002930 | S.LED | SML-512MW T86 | T | 74.7/43 |
| DS14 | 5040002930 | S.LED | SML-512MW T86 | T | 86.2/43 |
| DS15 | 5040002990 | S.LED | SML-512UWT86 | T | 8.5/56.4 |
| DS16 | 5040002930 | S.LED | SML-512MW T86 | T | 8.5/55.1 |
| DS17 | 5040002930 | S.LED | SML-512MW T86 | T | 56.2/56.4 |
| S1 | 2260002740 | S.SW | LS8J2M-T | T | 9.7/77.2 |
| S2 | 2260002740 | S.SW | LS8J2M-T | T | 8.2/62.5 |
| S3 | 2260002740 | S.SW | LS8J2M-T | T | 8.2/48.8 |
| S4 | 2260002740 | S.SW | LS8J2M-T | T | 8.2/35.1 |
| S5 | 2260002740 | S.SW | LS8J2M-T | T | 37.5/38.9 |
| S6 | 2260002740 | S.SW | LS8J2M-T | T | 26/38.9 |
| S7 | 2260002740 | S.SW | LS8J2M-T | T | 49/38.9 |
| S8 | 2260002740 | S.SW | LS8J2M-T | T | 63/38.9 |
| S11 | 2260002740 | S.SW | LS8J2M-T | T | 56/79 |
| S12 | 2260002740 | S.SW | LS8J2M-T | T | 74.5/38.9 |
| S13 | 2260002740 | S.SW | LS8J2M-T | T | 86/38.9 |
| S14 | 2260002740 | S.SW | LS8J2M-T | T | 100.3/82.7 |
| S15 | 2260002740 | S.SW | LS8J2M-T | T | 100.3/70.7 |
| S16 | 2260002740 | S.SW | LS8J2M-T | T | 100.3/58.7 |
| S17 | 2260002740 | S.SW | LS8J2M-T | T | 100.3/46.7 |
| S18 | 2260002740 | S.SW | LS8J2M-T | T | 100.3/34.7 |
| S19 | 2260002740 | S.SW | LS8J2M-T | T | 100.3/22.7 |
| S20 | 2260002740 | S.SW | LS8J2M-T | T | 100.3/10.7 |
| S21 | 2260002740 | S.SW | LS8J2M-T | T | 56/51 |

## [SW-B BOARD]

| REF NO. | ORDER NO. | DESCRIPTION | | M. | H/V LOCATION |
|---|---|---|---|---|---|
| J1 | 6510020531 | S.CNR | 52808-1871 | B | 112/20.3 |
| S1 | 2260002740 | S.SW | LS8J2M-T | T | 16.8/24.6 |
| S2 | 2260002740 | S.SW | LS8J2M-T | T | 38.8/24.6 |
| S3 | 2260002740 | S.SW | LS8J2M-T | T | 60.8/24.6 |
| S4 | 2260002740 | S.SW | LS8J2M-T | T | 82.8/24.6 |
| S5 | 2260002740 | S.SW | LS8J2M-T | T | 104.8/24.6 |
| S6 | 2260002740 | S.SW | LS8J2M-T | T | 126.8/24.6 |
| S7 | 2260002740 | S.SW | LS8J2M-T | T | 148.8/24.6 |
| S8 | 2260002740 | S.SW | LS8J2M-T | T | 16.8/15.2 |
| S9 | 2260002740 | S.SW | LS8J2M-T | T | 38.8/15.2 |
| S10 | 2260002740 | S.SW | LS8J2M-T | T | 60.8/15.2 |
| S11 | 2260002740 | S.SW | LS8J2M-T | T | 82.8/15.2 |
| S12 | 2260002740 | S.SW | LS8J2M-T | T | 104.8/15.2 |
| S13 | 2260002740 | S.SW | LS8J2M-T | T | 126.8/15.2 |
| S14 | 2260002740 | S.SW | LS8J2M-T | T | 148.8/15.2 |
| S15 | 2260002740 | S.SW | LS8J2M-T | T | 125.5/3.1 |
| S16 | 2260002740 | S.SW | LS8J2M-T | T | 145.2/3.1 |
| S17 | 2260002740 | S.SW | LS8J2M-T | T | 167.3/3.1 |

## [SW-C BOARD]

| REF NO. | ORDER NO. | DESCRIPTION | | M. | H/V LOCATION |
|---|---|---|---|---|---|
| R1 | 7030003480 | S.RES | ERJ3GEYJ 222 V (2.2 k) | B | 32.7/126.7 |
| R2 | 7030003520 | S.RES | ERJ3GEYJ 472 V (4.7 k) | B | 30.7/122.6 |
| R3 | 7030003580 | S.RES | ERJ3GEYJ 153 V (15 k) | B | 30.7/118.1 |
| R4 | 7030003540 | S.RES | ERJ3GEYJ 682 V (6.8 k) | B | 30.6/125.7 |
| R5 | 7030003480 | S.RES | ERJ3GEYJ 222 V (2.2 k) | B | 30.6/100.1 |
| R6 | 7030003520 | S.RES | ERJ3GEYJ 472 V (4.7 k) | B | 30.6/97.4 |
| R7 | 7030003580 | S.RES | ERJ3GEYJ 153 V (15 k) | B | 31.9/94.7 |
| R8 | 7030003540 | S.RES | ERJ3GEYJ 682 V (6.8 k) | B | 31.9/101.7 |
| R9 | 7030003480 | S.RES | ERJ3GEYJ 222 V (2.2 k) | B | 34.8/71.3 |
| R10 | 7030003520 | S.RES | ERJ3GEYJ 472 V (4.7 k) | B | 35.5/69.3 |
| R11 | 7030003580 | S.RES | ERJ3GEYJ 153 V (15 k) | B | 35.5/66.6 |
| R12 | 7030003540 | S.RES | ERJ3GEYJ 682 V (6.8 k) | B | 32.7/84.5 |
| R13 | 7030003480 | S.RES | ERJ3GEYJ 222 V (2.2 k) | B | 43.1/46.9 |
| R14 | 7030003520 | S.RES | ERJ3GEYJ 472 V (4.7 k) | B | 49.2/44.4 |
| R15 | 7030003540 | S.RES | ERJ3GEYJ 682 V (6.8 k) | B | 43.1/50.6 |
| R51 | 7030003400 | S.RES | ERJ3GEYJ 471 V (470) | B | 38.3/124.2 |
| R52 | 7030003400 | S.RES | ERJ3GEYJ 471 V (470) | B | 41.2/124.2 |
| R53 | 7030003400 | S.RES | ERJ3GEYJ 471 V (470) | B | 37.9/107.7 |
| R54 | 7030003400 | S.RES | ERJ3GEYJ 471 V (470) | B | 46.6/102.1 |
| R55 | 7030003400 | S.RES | ERJ3GEYJ 471 V (470) | B | 43.2/98.8 |
| R56 | 7030003400 | S.RES | ERJ3GEYJ 471 V (470) | B | 46.6/99.4 |
| R57 | 7030003400 | S.RES | ERJ3GEYJ 471 V (470) | B | 48.7/89.9 |
| R58 | 7030003400 | S.RES | ERJ3GEYJ 471 V (470) | B | 48.7/93.3 |
| C1 | 4030011600 | S.CER | C1608 JB 1E 104K-T | B | 28.9/94.5 |
| C2 | 4030011600 | S.CER | C1608 JB 1E 104K-T | B | 41.2/82 |
| C3 | 4030011600 | S.CER | C1608 JB 1E 104K-T | B | 32.1/71.3 |
| C4 | 4030011600 | S.CER | C1608 JB 1E 104K-T | B | 43.5/82.4 |
| J1 | 6510021721 | S.CNR | 30FLT-SM2-TB (LF) (SN) | B | 37.9/89 |
| J2 | 6510019971 | S.CNR | 52808-1071 | B | 44.2/113.1 |
| DS51 | 5040002930 | S.LED | SML-512MW T86 | T | 36.5/123.3 |
| DS52 | 5040002930 | S.LED | SML-512MW T86 | T | 48/123.3 |
| DS53 | 5040002930 | S.LED | SML-512MW T86 | T | 36.5/104.8 |
| DS54 | 5040002930 | S.LED | SML-512MW T86 | T | 48/104.8 |
| DS55 | 5040002930 | S.LED | SML-512MW T86 | T | 36.5/94.8 |
| DS56 | 5040002930 | S.LED | SML-512MW T86 | T | 48/94.8 |
| DS57 | 5040002930 | S.LED | SML-512MW T86 | T | 36.5/84.8 |
| DS58 | 5040002930 | S.LED | SML-512MW T86 | T | 48/84.8 |
| S1 | 2260002740 | S.SW | LS8J2M-T | T | 36.7/129.1 |
| S2 | 2260002740 | S.SW | LS8J2M-T | T | 48.2/129.1 |
| S3 | 2260002740 | S.SW | LS8J2M-T | T | 36.7/118.9 |
| S4 | 2260002740 | S.SW | LS8J2M-T | T | 48.2/118.9 |
| S5 | 2260002740 | S.SW | LS8J2M-T | T | 36.7/100.4 |
| S6 | 2260002740 | S.SW | LS8J2M-T | T | 48.2/100.4 |
| S7 | 2260002740 | S.SW | LS8J2M-T | T | 36.7/90.4 |
| S8 | 2260002740 | S.SW | LS8J2M-T | T | 48.2/90.4 |
| S9 | 2260002740 | S.SW | LS8J2M-T | T | 36.7/80.4 |
| S10 | 2260002740 | S.SW | LS8J2M-T | T | 48.2/80.4 |
| S11 | 2260002740 | S.SW | LS8J2M-T | T | 36.7/70 |
| S12 | 2260002740 | S.SW | LS8J2M-T | T | 36.7/61.2 |
| S13 | 2260002740 | S.SW | LS8J2M-T | T | 36.7/52.4 |
| S14 | 2260002740 | S.SW | LS8J2M-T | T | 36.5/42.7 |
| S15 | 2260002740 | S.SW | LS8J2M-T | T | 61.5/42.7 |
| S16 | 2260002740 | S.SW | LS8J2M-T | T | 12.2/32.4 |
| S17 | 2260002740 | S.SW | LS8J2M-T | T | 74.3/27.4 |
| S18 | 2260002740 | S.SW | LS8J2M-T | T | 12.2/14.7 |
| S19 | 2260002740 | S.SW | LS8J2M-T | T | 75.2/14.2 |
| S20 | 2260002740 | S.SW | LS8J2M-T | T | 12.2/2.3 |
| S21 | 2260002740 | S.SW | LS8J2M-T | T | 75.2/2.3 |
| S22 | 2260002740 | S.SW | LS8J2M-T | T | 25.7/2.3 |

M.=Mounted side (T: Mounted on the Top side, B: Mounted on the Bottom side)
S.=Surface mount

## [JACK BOARD]

| REF NO. | ORDER NO. | DESCRIPTION | | M. | H/V LOCATION |
|---|---|---|---|---|---|
| L1 | 6200003950 | S.COL | HF50ACC 322513-T | T | 33/7.8 |
| L2 | 6200003950 | S.COL | HF50ACC 322513-T | T | 23.5/2.7 |
| L3 | 6200003950 | S.COL | HF50ACC 322513-T | T | 16.2/2 |
| L4 | 6180000900 | COL | LAL 03NA 101K | | |
| L5 | 6180000900 | COL | LAL 03NA 101K | | |
| L6 | 6180000900 | COL | LAL 03NA 101K | | |
| L101 | 6180000900 | COL | LAL 03NA 101K | | |
| L102 | 6180000900 | COL | LAL 03NA 101K | | |
| L103 | 6180000900 | COL | LAL 03NA 101K | | |
| R1 | 7030006060 | S.RES | ERJ12YJ100U (10) | T | 24.1/6.1 |
| R2 | 7030006060 | S.RES | ERJ12YJ100U (10) | T | 16.8/5.4 |
| C1 | 4030006880 | S.CER | C1608 JB 1H 472K-T | B | 26.4/2.1 |
| C2 | 4030006880 | S.CER | C1608 JB 1H 472K-T | B | 26.4/4.8 |
| C3 | 4030006880 | S.CER | C1608 JB 1H 472K-T | B | 20.7/6.9 |
| C101 | 4030006880 | S.CER | C1608 JB 1H 472K-T | B | 15.3/6.9 |
| C102 | 4030006880 | S.CER | C1608 JB 1H 472K-T | B | 11.6/2.1 |
| J1 | 6510019971 | S.CNR | 52808-1071 | B | 19/3.2 |
| J2 | 6510023891 | CNR | S-G4617#01F | | |
| J102 | 6510023900 | CNR | LGR4619-7000 | | |
| EP101 | 6910012350 | S.BEA | MMZ1608Y 102BT | B | 15.3/8.2 |
| EP102 | 6910012350 | S.BEA | MMZ1608Y 102BT | B | 10.3/2.1 |

## [MIC BOARD]

| REF NO. | ORDER NO. | DESCRIPTION | | M. | H/V LOCATION |
|---|---|---|---|---|---|
| L1 | 6200003261 | S.COL | NLV32T-101J | B | 4.5/17.8 |
| L2 | 6200003261 | S.COL | NLV32T-101J | B | 2.4/12.5 |
| L3 | 6200003261 | S.COL | NLV32T-101J | B | 4.5/2 |
| L4 | 6200003950 | S.COL | HF50ACC 322513-T | B | 15.2/15.1 |
| C1 | 4030006880 | S.CER | C1608 JB 1H 472K-T | B | 8.6/16.1 |
| C2 | 4030006880 | S.CER | C1608 JB 1H 472K-T | B | 2.8/5.5 |
| C3 | 4030006880 | S.CER | C1608 JB 1H 472K-T | B | 14.2/12.3 |
| C4 | 4030007130 | S.CER | C1608 CH 1H 101J-T | B | 10.1/11.2 |
| C5 | 4030006880 | S.CER | C1608 JB 1H 472K-T | B | 1.5/5.5 |
| C6 | 4030006880 | S.CER | C1608 JB 1H 472K-T | B | 9.6/.9 |
| C7 | 4030006880 | S.CER | C1608 JB 1H 472K-T | B | 7.7/10.1 |
| C8 | 4030007090 | S.CER | C1608 CH 1H 470J-T | B | 9.4/13.9 |
| J1 | 6510000191 | CNR | FM214-8SS (P) -1 | | |
| J2 | 6510019971 | S.CNR | 52808-1071 | B | 12.7/20.2 |
| EP2 | 6910012350 | S.BEA | MMZ1608Y 102BT | B | 4.1/6.3 |
| EP3 | 6910012350 | S.BEA | MMZ1608Y 102BT | B | 7.6/2 |
| EP4 | 6910012350 | S.BEA | MMZ1608Y 102BT | B | 10.4/16 |
| EP5 | 6910012350 | S.BEA | MMZ1608Y 102BT | B | 2.7/8.1 |
| EP6 | 6910012350 | S.BEA | MMZ1608Y 102BT | B | 7.7/7.7 |
| EP7 | 6910015130 | S.BEA | MMZ1608D 301BT | B | 17.2/10.8 |
| EP8 | 6910015130 | S.BEA | MMZ1608D 301BT | B | 15.9/10.8 |
| EP9 | 6910015130 | S.BEA | MMZ1608D 301BT | B | 10.2/6.9 |
| EP10 | 6910015130 | S.BEA | MMZ1608D 301BT | B | 11.5/9.1 |
| EP11 | 6910012350 | S.BEA | MMZ1608Y 102BT | B | 5.4/14.1 |

## [TENKEY BOARD]

| REF NO. | ORDER NO. | DESCRIPTION | | M. | H/V LOCATION |
|---|---|---|---|---|---|
| IC1 | 1130011510 | S.IC | BU2099FV-E2 | B | 37.5/67.3 |
| IC2 | 1130011510 | S.IC | BU2099FV-E2 | B | 33.5/31.8 |
| R1 | 7030003480 | S.RES | ERJ3GEYJ 222 V (2.2 k) | B | 16.3/75.9 |
| R2 | 7030003520 | S.RES | ERJ3GEYJ 472 V (4.7 k) | B | 16.6/67.7 |
| R3 | 7030003580 | S.RES | ERJ3GEYJ 153 V (15 k) | B | 13.8/47.4 |
| R4 | 7030003540 | S.RES | ERJ3GEYJ 682 V (6.8 k) | B | 16.3/79.3 |
| R5 | 7030003480 | S.RES | ERJ3GEYJ 222 V (2.2 k) | B | 31.5/67.4 |
| R6 | 7030003520 | S.RES | ERJ3GEYJ 472 V (4.7 k) | B | 30.7/65.6 |
| R7 | 7030003580 | S.RES | ERJ3GEYJ 153 V (15 k) | B | 32.3/49.9 |
| R8 | 7030003540 | S.RES | ERJ3GEYJ 682 V (6.8 k) | B | 30.3/78.3 |
| R9 | 7030003480 | S.RES | ERJ3GEYJ 222 V (2.2 k) | B | 49.8/70.1 |
| R10 | 7030003520 | S.RES | ERJ3GEYJ 472 V (4.7 k) | B | 49.8/62.2 |
| R11 | 7030003580 | S.RES | ERJ3GEYJ 153 V (15 k) | B | 47.6/52.6 |
| R12 | 7030003540 | S.RES | ERJ3GEYJ 682 V (6.8 k) | B | 49.8/78.4 |
| R51 | 7030003390 | S.RES | ERJ3GEYJ 391 V (390) | B | 8/78 |
| R52 | 7030003390 | S.RES | ERJ3GEYJ 391 V (390) | B | 8/75.3 |
| R53 | 7030003390 | S.RES | ERJ3GEYJ 391 V (390) | B | 8/70.9 |
| R54 | 7030003390 | S.RES | ERJ3GEYJ 391 V (390) | B | 8/72.9 |
| R55 | 7030003390 | S.RES | ERJ3GEYJ 391 V (390) | B | 10.7/58.2 |
| R56 | 7030003390 | S.RES | ERJ3GEYJ 391 V (390) | B | 12/58.2 |
| R57 | 7030003390 | S.RES | ERJ3GEYJ 391 V (390) | B | 8/49.5 |
| R58 | 7030003390 | S.RES | ERJ3GEYJ 391 V (390) | B | 8/46.8 |
| R59 | 7030003390 | S.RES | ERJ3GEYJ 391 V (390) | B | 19.1/78 |
| R60 | 7030003390 | S.RES | ERJ3GEYJ 391 V (390) | B | 19.1/75.3 |
| R61 | 7030003390 | S.RES | ERJ3GEYJ 391 V (390) | B | 25.5/64.5 |
| R62 | 7030003390 | S.RES | ERJ3GEYJ 391 V (390) | B | 25.5/65.8 |
| R63 | 7030003390 | S.RES | ERJ3GEYJ 391 V (390) | B | 25.5/51.7 |
| R64 | 7030003390 | S.RES | ERJ3GEYJ 391 V (390) | B | 25.5/53 |
| R65 | 7030003390 | S.RES | ERJ3GEYJ 391 V (390) | B | 25.5/49.5 |
| R66 | 7030003390 | S.RES | ERJ3GEYJ 391 V (390) | B | 25.5/47 |
| R67 | 7030003390 | S.RES | ERJ3GEYJ 391 V (390) | B | 43/78 |
| R68 | 7030003390 | S.RES | ERJ3GEYJ 391 V (390) | B | 43/75.3 |
| R69 | 7030003390 | S.RES | ERJ3GEYJ 391 V (390) | B | 43.8/68.5 |
| R70 | 7030003390 | S.RES | ERJ3GEYJ 391 V (390) | B | 43.8/67.2 |
| R71 | 7030003390 | S.RES | ERJ3GEYJ 391 V (390) | B | 43/59 |
| R72 | 7030003390 | S.RES | ERJ3GEYJ 391 V (390) | B | 43/56.3 |
| R73 | 7030003390 | S.RES | ERJ3GEYJ 391 V (390) | B | 44.4/51.3 |
| R74 | 7030003390 | S.RES | ERJ3GEYJ 391 V (390) | B | 44.4/52.6 |
| R75 | 7030003460 | S.RES | ERJ3GEYJ 152 V (1.5 k) | B | 29.7/21 |
| R76 | 7030003460 | S.RES | ERJ3GEYJ 152 V (1.5 k) | B | 44.3/18.1 |
| C1 | 4030011600 | S.CER | C1608 JB 1E 104K-T | B | 8.5/66.9 |
| C2 | 4030011600 | S.CER | C1608 JB 1E 104K-T | B | 5.4/69.3 |
| C3 | 4030011600 | S.CER | C1608 JB 1E 104K-T | B | 11/67.4 |
| C4 | 4030011600 | S.CER | C1608 JB 1E 104K-T | B | 35.9/71.5 |
| C5 | 4030011600 | S.CER | C1608 JB 1E 104K-T | B | 31.7/35.9 |
| J1 | 6510021721 | S.CNR | 30FLT-SM2-TB (LF) (SN) | B | 5.2/60 |
| J2 | 6510021721 | S.CNR | 30FLT-SM2-TB (LF) (SN) | B | 5.2/31.6 |
| J3 | 6510021721 | S.CNR | 30FLT-SM2-TB (LF) (SN) | B | 49.9/33 |
| J4 | 6510019971 | S.CNR | 52808-1071 | B | 53.9/57 |
| J5 | 6510019971 | S.CNR | 52808-1071 | B | 24.5/74.7 |
| J6 | 6510003401 | CNR | B04B-EH-S (LF) (SN) | | |
| J7 | 6510018971 | S.CNR | B4B-PH-SM4-TB (LF) (SN) | B | 36.5/3 |
| DS1 | 5040002980 | S.LED | SML-512DW-T86 | T | 29.5/19 |
| DS2 | 5040002980 | S.LED | SML-512DW-T86 | T | 45.5/19 |
| S1 | 2260002740 | S.SW | LS8J2M-T | T | 9.5/34 |
| S2 | 2260002740 | S.SW | LS8J2M-T | T | 9.5/26 |
| S3 | 2260002740 | S.SW | LS8J2M-T | T | 29.5/34 |
| S4 | 2260002740 | S.SW | LS8J2M-T | T | 29.5/26 |
| S5 | 2260002740 | S.SW | LS8J2M-T | T | 45.5/34 |
| S6 | 2260002740 | S.SW | LS8J2M-T | T | 45.5/26 |
| S7 | 2260002740 | S.SW | LS8J2M-T | T | 9.5/12.7 |
| S8 | 2260002740 | S.SW | LS8J2M-T | T | 29.5/16 |
| S9 | 2260002740 | S.SW | LS8J2M-T | T | 29.5/7.5 |
| S11 | 2260002820 | S.SW | LS9J2M-2D/D-T | T | 10.5/76.2 |
| S12 | 2260002820 | S.SW | LS9J2M-2D/D-T | T | 10.5/66.7 |
| S13 | 2260002820 | S.SW | LS9J2M-2D/D-T | T | 10.5/57.2 |
| S14 | 2260002820 | S.SW | LS9J2M-2D/D-T | T | 10.5/47.7 |
| S15 | 2260002820 | S.SW | LS9J2M-2D/D-T | T | 28/76.2 |
| S16 | 2260002820 | S.SW | LS9J2M-2D/D-T | T | 28/66.7 |
| S17 | 2260002820 | S.SW | LS9J2M-2D/D-T | T | 28/57.2 |
| S18 | 2260002820 | S.SW | LS9J2M-2D/D-T | T | 28/47.7 |
| S19 | 2260002820 | S.SW | LS9J2M-2D/D-T | T | 45.5/76.2 |
| S20 | 2260002820 | S.SW | LS9J2M-2D/D-T | T | 45.5/66.7 |
| S21 | 2260002820 | S.SW | LS9J2M-2D/D-T | T | 45.5/57.2 |
| S22 | 2260002820 | S.SW | LS9J2M-2D/D-T | T | 45.5/47.7 |
| S23 | 2260002740 | S.SW | LS8J2M-T | T | 45.5/16 |
| S24 | 2260002740 | S.SW | LS8J2M-T | T | 45.5/7.5 |

M.=Mounted side (T: Mounted on the Top side, B: Mounted on the Bottom side)
S.=Surface mount

## [PBT1 BOARD]

| REF NO. | ORDER NO. | DESCRIPTION | | M. | H/V LOCATION |
|---|---|---|---|---|---|
| R1 | 7210003180 | VAR | RV-319 (RK0972210) | | |
| R2 | 7030003520 | S.RES | ERJ3GEYJ 472 V (4.7 k) | T | 13.5/6.5 |
| R3 | 7030003520 | S.RES | ERJ3GEYJ 472 V (4.7 k) | T | 13.5/10 |
| C1 | 4030006880 | S.CER | C1608 JB 1H 472K-T | T | 15.6/10 |
| C2 | 4030006880 | S.CER | C1608 JB 1H 472K-T | T | 15.6/6.5 |
| J1 | 6510019971 | S.CNR | 52808-1071 | T | 24.5/7 |
| S1 | 2250000410 | ECR | TP90D96E20-30F-2178-1 | | |

## [PBT2 BOARD]

| REF NO. | ORDER NO. | DESCRIPTION | | M. | H/V LOCATION |
|---|---|---|---|---|---|
| R1 | 7210003180 | VAR | RV-319 (RK0972210) | | |
| R2 | 7210003170 | VAR | RV-318 (RK09L1120CON) | | |
| R3 | 7030003520 | S.RES | ERJ3GEYJ 472 V (4.7 k) | T | 47.4/8.5 |
| R4 | 7030003520 | S.RES | ERJ3GEYJ 472 V (4.7 k) | T | 47.4/9.8 |
| R5 | 7030003520 | S.RES | ERJ3GEYJ 472 V (4.7 k) | T | 16.2/12.3 |
| C1 | 4030006880 | S.CER | C1608 JB 1H 472K-T | T | 52.5/10.2 |
| C2 | 4030006880 | S.CER | C1608 JB 1H 472K-T | T | 50.6/10.2 |
| C3 | 4030006880 | S.CER | C1608 JB 1H 472K-T | T | 16.2/11 |
| J1 | 6510019971 | S.CNR | 52808-1071 | T | 59.1/5.1 |
| S1 | 2250000410 | ECR | TP90D96E20-30F-2178-1 | | |

## [LED BOARD]

| REF NO. | ORDER NO. | DESCRIPTION | | M. | H/V LOCATION |
|---|---|---|---|---|---|
| R1 | 7030003470 | S.RES | ERJ3GEYJ 182 V (1.8 k) | T | 9.1/14.9 |
| R2 | 7030003420 | S.RES | ERJ3GEYJ 681 V (680) | T | 21/14.9 |
| R3 | 7030003440 | S.RES | ERJ3GEYJ 102 V (1 k) | T | 32.1/14.9 |
| R4 | 7030003400 | S.RES | ERJ3GEYJ 471 V (470) | T | 80.2/14.9 |
| R5 | 7030003470 | S.RES | ERJ3GEYJ 182 V (1.8 k) | T | 126/14.9 |
| R6 | 7030003420 | S.RES | ERJ3GEYJ 681 V (680) | T | 139/14.9 |
| R7 | 7030003440 | S.RES | ERJ3GEYJ 102 V (1 k) | T | 149.8/14.9 |
| J1 | 6510020711 | S.CNR | 52793-1070 (1090) | T | 111.3/2.6 |
| DS1 | 5040003000 | S.LED | SML-A12UT-T86 | T | 5.6/15.9 |
| DS2 | 5040002961 | S.LED | SML-A12MT T86J | T | 17.6/15.9 |
| DS3 | 5040003010 | S.LED | SML-A12WT | T | 29.6/15.9 |
| DS4 | 5040002970 | S.LED | CL-270WB-D-TS | T | 76.6/15.9 |
| DS5 | 5040003000 | S.LED | SML-A12UT-T86 | T | 123.6/15.9 |
| DS6 | 5040002961 | S.LED | SML-A12MT T86J | T | 135.6/15.9 |
| DS7 | 5040003010 | S.LED | SML-A12WT | T | 147.6/15.9 |

## [CF BOARD]

| REF NO. | ORDER NO. | DESCRIPTION | | M. | H/V LOCATION |
|---|---|---|---|---|---|
| R1 | 7030003470 | S.RES | ERJ3GEYJ 182 V (1.8 k) | T | 8.8/8.7 |
| J1 | 6510024151 | S.CNR | 50FY-BMT-TB (LF) (SN) | T | 34.5/4.4 |
| J2 | 6510025670 | S.CNR | 31-5620-050-719-871 | T | 34.5/13.6 |
| J3 | 6510021601 | S.CNR | S2B-PH-SM4-TB (LF) (SN) | T | 13.7/3.7 |
| DS1 | 5040002990 | S.LED | SML-512UWT86 | T | 61.2/40.5 |
| EP2 | 6910015640 | E.OTH | 30-5610-000-002-000 | | |

## [DISPLAY BOARD]

| REF NO. | ORDER NO. | DESCRIPTION | | M. | H/V LOCATION |
|---|---|---|---|---|---|
| IC1 | 1130009640 | S.IC | BU4051BCFV-E2 | T | 121.9/76.4 |
| IC2 | 1130009640 | S.IC | BU4051BCFV-E2 | T | 110.5/10.9 |
| IC3 | 1130009640 | S.IC | BU4051BCFV-E2 | T | 76.7/20 |
| IC4 | 1130009640 | S.IC | BU4051BCFV-E2 | T | 24/61.2 |
| IC5 | 1130009640 | S.IC | BU4051BCFV-E2 | T | 106.8/77.4 |
| IC6 | 1140011820 | S.IC | M30620FCMGP D5 | T | 48.1/27.7 |
| IC7 | 1130011510 | S.IC | BU2099FV-E2 | T | 124/59.8 |
| IC201 | 1130009301 | S.IC | TC7SET08FU (T5L,JF) | T | 71.1/51.8 |
| IC202 | 1130009301 | S.IC | TC7SET08FU (T5L,JF) | T | 107.2/58.5 |
| IC601 | 1130011551 | S.IC | RX-4581NB-F | T | 39/45.9 |
| IC651 | 1110005821 | S.IC | R3112N281A-TR-F | T | 47.9/91.1 |
| Q200 | 1590000430 | S.TR | DTC144EUA T106 | T | 40.8/89.7 |
| Q201 | 1530003301 | S.TR | 2SC3647S-TD-E | T | 91.1/47.1 |
| Q202 | 1530003301 | S.TR | 2SC3647S-TD-E | T | 91.1/26.5 |
| Q203 | 1530002060 | S.TR | 2SC4081 T106 R | T | 73.9/61.5 |
| Q204 | 1520000651 | S.TR | 2SB1201S-TL-E | T | 79.5/65.1 |
| Q205 | 1590000680 | S.TR | DTC114EUA T106 | T | 70.8/57.1 |
| Q206 | 1590000680 | S.TR | DTC114EUA T106 | T | 113/19.4 |
| Q208 | 1590001330 | S.TR | DTA114EUA T106 | T | 120/68.5 |
| Q209 | 1520000651 | S.TR | 2SB1201S-TL-E | T | 113.9/59.9 |
| Q210 | 1530002060 | S.TR | 2SC4081 T106 R | T | 107.3/55.3 |
| Q211 | 1590001330 | S.TR | DTA114EUA T106 | T | 122.5/65.4 |
| Q212 | 1590000680 | S.TR | DTC114EUA T106 | T | 72.5/54.3 |
| Q501 | 1590000680 | S.TR | DTC114EUA T106 | T | 86/88.8 |
| Q502 | 1590000680 | S.TR | DTC114EUA T106 | T | 86/92.5 |
| Q503 | 1590000680 | S.TR | DTC114EUA T106 | T | 82.8/90.8 |
| Q504 | 1590001330 | S.TR | DTA114EUA T106 | T | 89.2/88.8 |
| Q505 | 1590000680 | S.TR | DTC114EUA T106 | T | 125/66.6 |
| Q601 | 1510000501 | S.TR | 2SA1162-GR (TE85R,F) | T | 41.4/85.2 |
| D7 | 1750000520 | S.DIO | DAN222TL | T | 122.4/18.7 |
| D8 | 1160000140 | S.DIO | DAP222 TL | T | 122.4/15.3 |
| D9 | 1730002340 | S.ZEN | MA8047-M (TX) | T | 74.3/59.3 |
| D10 | 1730002590 | S.ZEN | MA8033-H (TX) | T | 109.5/56.9 |
| D11 | 1790001670 | S.DIO | RB706F-40T106 | T | 121.3/10.6 |
| D12 | 1790001670 | S.DIO | RB706F-40T106 | T | 60/31 |
| D601 | 1790001250 | S.DIO | MA2S1110G-(TX) | T | 42.2/82.8 |
| D602 | 1790001250 | S.DIO | MA2S1110G-(TX) | T | 39/85.9 |
| D603 | 1790001250 | S.DIO | MA2S1110G-(TX) | T | 39/83.4 |
| X1 | 6050009870 | S.XTL | CR-567 (9.8304 MHz) | T | 49.7/44.5 |
| L201 | 6200001831 | S.COL | NLV32T-100J | T | 112/85.8 |
| L203 | 6200003950 | S.COL | HF50ACC 322513-T | T | 115.2/85.6 |
| L204 | 6200001831 | S.COL | NLV32T-100J | T | 126.9/91.6 |
| L205 | 6200003950 | S.COL | HF50ACC 322513-T | T | 61.2/36.6 |
| L207 | 6200003950 | S.COL | HF50ACC 322513-T | T | 117.4/17.1 |
| L208 | 6200003950 | S.COL | HF50ACC 322513-T | T | 118.4/85.6 |
| L209 | 6200003950 | S.COL | HF50ACC 322513-T | T | 9.9/64 |
| L210 | 6190001191 | S.COL | D10F-#A814AY-101K | T | 86.6/79.7 |
| L211 | 6190001191 | S.COL | D10F-#A814AY-101K | T | 81.2/38.2 |
| L601 | 6200001831 | S.COL | NLV32T-100J | T | 34.7/83.8 |
| R200 | 7030003440 | S.RES | ERJ3GEYJ 102 V (1 k) | T | 73.1/51.7 |
| R201 | 7030003470 | S.RES | ERJ3GEYJ 182 V (1.8 k) | T | 96.6/43.6 |
| R202 | 7030003470 | S.RES | ERJ3GEYJ 182 V (1.8 k) | T | 96.6/32.9 |
| R203 | 7030003800 | S.RES | ERJ3GEYJ 105 V (1 M) | T | 49.7/41.2 |
| R208 | 7030003360 | S.RES | ERJ3GEYJ 221 V (220) | T | 75/57 |
| R209 | 7030003860 | S.RES | ERJ3GE JPW V | T | 14.6/25 |
| R210 | 7030003860 | S.RES | ERJ3GE JPW V | T | 22/24.4 |
| R212 | 7030003660 | S.RES | ERJ3GEYJ 683 V (68 k) | T | 67.8/57.6 |
| R213 | 7030003580 | S.RES | ERJ3GEYJ 153 V (15 k) | T | 70.3/54.7 |
| R214 | 7030003440 | S.RES | ERJ3GEYJ 102 V (1 k) | T | 40.7/13.4 |
| R215 | 7030003440 | S.RES | ERJ3GEYJ 102 V (1 k) | T | 39.4/13.4 |
| R216 | 7030003440 | S.RES | ERJ3GEYJ 102 V (1 k) | T | 38.1/13.4 |
| R217 | 7030003440 | S.RES | ERJ3GEYJ 102 V (1 k) | T | 36.8/13.4 |
| R218 | 7030003440 | S.RES | ERJ3GEYJ 102 V (1 k) | T | 35.5/13.4 |
| R219 | 7030003440 | S.RES | ERJ3GEYJ 102 V (1 k) | T | 34.2/13.4 |
| R220 | 7030003440 | S.RES | ERJ3GEYJ 102 V (1 k) | T | 31.6/13.6 |
| R221 | 7030003440 | S.RES | ERJ3GEYJ 102 V (1 k) | T | 32.9/13.4 |
| R222 | 7030003440 | S.RES | ERJ3GEYJ 102 V (1 k) | T | 30.6/16.1 |
| R223 | 7030003440 | S.RES | ERJ3GEYJ 102 V (1 k) | T | 29.8/13.5 |
| R224 | 7030003440 | S.RES | ERJ3GEYJ 102 V (1 k) | T | 29.1/16.1 |
| R225 | 7030003440 | S.RES | ERJ3GEYJ 102 V (1 k) | T | 28.3/13.4 |
| R226 | 7030003440 | S.RES | ERJ3GEYJ 102 V (1 k) | T | 27.6/16.1 |
| R227 | 7030003440 | S.RES | ERJ3GEYJ 102 V (1 k) | T | 26.8/13.4 |
| R228 | 7030003440 | S.RES | ERJ3GEYJ 102 V (1 k) | T | 25.5/13.4 |
| R229 | 7030003440 | S.RES | ERJ3GEYJ 102 V (1 k) | T | 22.9/13.4 |
| R230 | 7030003440 | S.RES | ERJ3GEYJ 102 V (1 k) | T | 24.2/13.4 |
| R232 | 7030003440 | S.RES | ERJ3GEYJ 102 V (1 k) | T | 74.1/13.4 |
| R233 | 7030003440 | S.RES | ERJ3GEYJ 102 V (1 k) | T | 76.9/13.4 |
| R234 | 7030003440 | S.RES | ERJ3GEYJ 102 V (1 k) | T | 75.4/13.4 |
| R235 | 7030003440 | S.RES | ERJ3GEYJ 102 V (1 k) | T | 78.2/13.4 |
| R236 | 7030003440 | S.RES | ERJ3GEYJ 102 V (1 k) | T | 79.5/13.4 |
| R237 | 7030003440 | S.RES | ERJ3GEYJ 102 V (1 k) | T | 80.8/13.4 |
| R238 | 7030003440 | S.RES | ERJ3GEYJ 102 V (1 k) | T | 82.1/13.4 |
| R239 | 7030003440 | S.RES | ERJ3GEYJ 102 V (1 k) | T | 107.3/86.7 |
| R240 | 7030003440 | S.RES | ERJ3GEYJ 102 V (1 k) | T | 105.9/86.7 |
| R241 | 7030003680 | S.RES | ERJ3GEYJ 104 V (100 k) | T | 108.6/86.6 |
| R242 | 7030003680 | S.RES | ERJ3GEYJ 104 V (100 k) | T | 104.5/86.7 |
| R246 | 7030003440 | S.RES | ERJ3GEYJ 102 V (1 k) | T | 59.5/13.3 |
| R247 | 7030003440 | S.RES | ERJ3GEYJ 102 V (1 k) | T | 58.2/13.3 |
| R248 | 7030003440 | S.RES | ERJ3GEYJ 102 V (1 k) | T | 56.9/13.3 |
| R249 | 7030003440 | S.RES | ERJ3GEYJ 102 V (1 k) | T | 55.6/13.3 |
| R250 | 7030003440 | S.RES | ERJ3GEYJ 102 V (1 k) | T | 54.3/13.3 |
| R251 | 7030003320 | S.RES | ERJ3GEYJ 101 V (100) | T | 52.8/13.3 |
| R252 | 7030003440 | S.RES | ERJ3GEYJ 102 V (1 k) | T | 51.5/13.3 |
| R253 | 7030003440 | S.RES | ERJ3GEYJ 102 V (1 k) | T | 50.2/13.3 |

M.=Mounted side (T: Mounted on the Top side, B: Mounted on the Bottom side)
S.=Surface mount

## [DISPLAY BOARD]

| REF NO. | ORDER NO. | DESCRIPTION | M. | H/V LOCATION |
|---|---|---|---|---|
| R254 | 7030003680 | S.RES ERJ3GEYJ 104 V (100 k) | T | 48.4/13.3 |
| R255 | 7030003640 | S.RES ERJ3GEYJ 473 V (47 k) | T | 12.6/14.1 |
| R256 | 7030003640 | S.RES ERJ3GEYJ 473 V (47 k) | T | 16.5/14.1 |
| R257 | 7030003670 | S.RES ERJ3GEYJ 823 V (82 k) | T | 13.9/14.1 |
| R258 | 7030003670 | S.RES ERJ3GEYJ 823 V (82 k) | T | 15.2/14.1 |
| R259 | 7030003440 | S.RES ERJ3GEYJ 102 V (1 k) | T | 12.8/90.1 |
| R260 | 7030003440 | S.RES ERJ3GEYJ 102 V (1 k) | T | 19.4/87.2 |
| R261 | 7030003440 | S.RES ERJ3GEYJ 102 V (1 k) | T | 10.1/88.5 |
| R262 | 7030003440 | S.RES ERJ3GEYJ 102 V (1 k) | T | 7.1/79.8 |
| R263 | 7030003440 | S.RES ERJ3GEYJ 102 V (1 k) | T | 18/81.9 |
| R264 | 7030003440 | S.RES ERJ3GEYJ 102 V (1 k) | T | 7.1/78.5 |
| R265 | 7030003440 | S.RES ERJ3GEYJ 102 V (1 k) | T | 18/80.6 |
| R266 | 7030003440 | S.RES ERJ3GEYJ 102 V (1 k) | T | 7.1/77.2 |
| R267 | 7030003440 | S.RES ERJ3GEYJ 102 V (1 k) | T | 18/79.3 |
| R268 | 7030003440 | S.RES ERJ3GEYJ 102 V (1 k) | T | 7.1/75.9 |
| R269 | 7030003440 | S.RES ERJ3GEYJ 102 V (1 k) | T | 18/78 |
| R270 | 7030003440 | S.RES ERJ3GEYJ 102 V (1 k) | T | 7.1/74.6 |
| R271 | 7030003440 | S.RES ERJ3GEYJ 102 V (1 k) | T | 18/76.7 |
| R272 | 7030003440 | S.RES ERJ3GEYJ 102 V (1 k) | T | 7.1/73.3 |
| R273 | 7030003440 | S.RES ERJ3GEYJ 102 V (1 k) | T | 7.1/72 |
| R274 | 7030003440 | S.RES ERJ3GEYJ 102 V (1 k) | T | 18/75.4 |
| R275 | 7030003440 | S.RES ERJ3GEYJ 102 V (1 k) | T | 7.1/70.7 |
| R276 | 7030003440 | S.RES ERJ3GEYJ 102 V (1 k) | T | 18/74.1 |
| R278 | 7030003440 | S.RES ERJ3GEYJ 102 V (1 k) | T | 13.4/42.7 |
| R279 | 7030003440 | S.RES ERJ3GEYJ 102 V (1 k) | T | 4/43.9 |
| R280 | 7030003440 | S.RES ERJ3GEYJ 102 V (1 k) | T | 13.4/44 |
| R281 | 7030003440 | S.RES ERJ3GEYJ 102 V (1 k) | T | 4/45.2 |
| R282 | 7030003440 | S.RES ERJ3GEYJ 102 V (1 k) | T | 13.4/45.3 |
| R283 | 7030003440 | S.RES ERJ3GEYJ 102 V (1 k) | T | 4/46.5 |
| R284 | 7030003520 | S.RES ERJ3GEYJ 472 V (4.7 k) | T | 13.4/46.6 |
| R285 | 7030003440 | S.RES ERJ3GEYJ 102 V (1 k) | T | 4/47.8 |
| R286 | 7030003440 | S.RES ERJ3GEYJ 102 V (1 k) | T | 13.4/47.9 |
| R287 | 7030003440 | S.RES ERJ3GEYJ 102 V (1 k) | T | 4/49.1 |
| R288 | 7030003440 | S.RES ERJ3GEYJ 102 V (1 k) | T | 13.4/49.2 |
| R289 | 7030003440 | S.RES ERJ3GEYJ 102 V (1 k) | T | 13.4/50.5 |
| R290 | 7030003440 | S.RES ERJ3GEYJ 102 V (1 k) | T | 4/51.7 |
| R291 | 7030003440 | S.RES ERJ3GEYJ 102 V (1 k) | T | 13.4/51.8 |
| R292 | 7030003440 | S.RES ERJ3GEYJ 102 V (1 k) | T | 4/53 |
| R293 | 7030003440 | S.RES ERJ3GEYJ 102 V (1 k) | T | 13.4/54.4 |
| R294 | 7030003440 | S.RES ERJ3GEYJ 102 V (1 k) | T | 4/55.6 |
| R295 | 7030003440 | S.RES ERJ3GEYJ 102 V (1 k) | T | 4/58.2 |
| R296 | 7030003440 | S.RES ERJ3GEYJ 102 V (1 k) | T | 13.4/58.3 |
| R297 | 7030003440 | S.RES ERJ3GEYJ 102 V (1 k) | T | 4/60.8 |
| R298 | 7030003440 | S.RES ERJ3GEYJ 102 V (1 k) | T | 13.4/59.6 |
| R299 | 7030003440 | S.RES ERJ3GEYJ 102 V (1 k) | T | 4/50.4 |
| R300 | 7030003440 | S.RES ERJ3GEYJ 102 V (1 k) | T | 4/63.4 |
| R301 | 7030003440 | S.RES ERJ3GEYJ 102 V (1 k) | T | 13.4/62.2 |
| R302 | 7030003560 | S.RES ERJ3GEYJ 103 V (10 k) | T | 13.4/60.9 |
| R303 | 7030003560 | S.RES ERJ3GEYJ 103 V (10 k) | T | 4/62.1 |
| R304 | 7030003560 | S.RES ERJ3GEYJ 103 V (10 k) | T | 13.4/57 |
| R305 | 7030003560 | S.RES ERJ3GEYJ 103 V (10 k) | T | 4/59.5 |
| R306 | 7030003560 | S.RES ERJ3GEYJ 103 V (10 k) | T | 4/56.9 |
| R307 | 7030003560 | S.RES ERJ3GEYJ 103 V (10 k) | T | 13.4/55.7 |
| R308 | 7030003560 | S.RES ERJ3GEYJ 103 V (10 k) | T | 4/54.3 |
| R309 | 7030003560 | S.RES ERJ3GEYJ 103 V (10 k) | T | 13.4/53.1 |
| R310 | 7030003440 | S.RES ERJ3GEYJ 102 V (1 k) | T | 24.2/32 |
| R311 | 7030003440 | S.RES ERJ3GEYJ 102 V (1 k) | T | 22.9/32 |
| R312 | 7030003440 | S.RES ERJ3GEYJ 102 V (1 k) | T | 104.9/9.4 |
| R313 | 7030003440 | S.RES ERJ3GEYJ 102 V (1 k) | T | 104.9/10.7 |
| R314 | 7030003440 | S.RES ERJ3GEYJ 102 V (1 k) | T | 104.1/12.2 |
| R315 | 7030003440 | S.RES ERJ3GEYJ 102 V (1 k) | T | 104.9/6.8 |
| R316 | 7030003440 | S.RES ERJ3GEYJ 102 V (1 k) | T | 116.1/13.7 |
| R317 | 7030003440 | S.RES ERJ3GEYJ 102 V (1 k) | T | 116.7/8.3 |
| R318 | 7030003440 | S.RES ERJ3GEYJ 102 V (1 k) | T | 116.1/11.7 |
| R319 | 7030003440 | S.RES ERJ3GEYJ 102 V (1 k) | T | 116.6/9.6 |
| R320 | 7030003440 | S.RES ERJ3GEYJ 102 V (1 k) | T | 135.2/23.4 |
| R321 | 7030003440 | S.RES ERJ3GEYJ 102 V (1 k) | T | 127.7/20.8 |
| R322 | 7030003440 | S.RES ERJ3GEYJ 102 V (1 k) | T | 126.4/20.8 |
| R323 | 7030003560 | S.RES ERJ3GEYJ 103 V (10 k) | T | 114.9/18.7 |
| R325 | 7030003380 | S.RES ERJ3GEYJ 331 V (330) | T | 106.9/69.6 |
| R326 | 7030003360 | S.RES ERJ3GEYJ 221 V (220) | T | 109.8/54.4 |
| R327 | 7030003580 | S.RES ERJ3GEYJ 153 V (15 k) | T | 105.4/55.1 |
| R328 | 7030003660 | S.RES ERJ3GEYJ 683 V (68 k) | T | 105.1/61.2 |
| R329 | 7030003560 | S.RES ERJ3GEYJ 103 V (10 k) | T | 38/33.3 |
| R330 | 7030003480 | S.RES ERJ3GEYJ 222 V (2.2 k) | T | 128.8/54.1 |
| R331 | 7030003640 | S.RES ERJ3GEYJ 473 V (47 k) | T | 18/84.5 |
| R332 | 7030003640 | S.RES ERJ3GEYJ 473 V (47 k) | T | 9.1/84.8 |
| R333 | 7030003640 | S.RES ERJ3GEYJ 473 V (47 k) | T | 18/83.2 |
| R334 | 7030003640 | S.RES ERJ3GEYJ 473 V (47 k) | T | 9.1/83.5 |
| R335 | 7030003670 | S.RES ERJ3GEYJ 823 V (82 k) | T | 21.4/84.5 |
| R336 | 7030003670 | S.RES ERJ3GEYJ 823 V (82 k) | T | 8.4/86.9 |
| R337 | 7030003670 | S.RES ERJ3GEYJ 823 V (82 k) | T | 20.7/83.2 |
| R338 | 7030003670 | S.RES ERJ3GEYJ 823 V (82 k) | T | 8.1/81.1 |
| R339 | 7070000261 | RES ERG2SJ 220 (22) | | |
| R340 | 7070000261 | RES ERG2SJ 220 (22) | | |
| R342 | 7030003640 | S.RES ERJ3GEYJ 473 V (47 k) | T | 35.4/38.4 |
| R343 | 7030003640 | S.RES ERJ3GEYJ 473 V (47 k) | T | 105.1/57.7 |
| R351 | 7030003440 | S.RES ERJ3GEYJ 102 V (1 k) | T | 123.2/70.3 |
| R352 | 7030003440 | S.RES ERJ3GEYJ 102 V (1 k) | T | 101.2/80.6 |
| R353 | 7030003440 | S.RES ERJ3GEYJ 102 V (1 k) | T | 102.3/75 |
| R354 | 7030003440 | S.RES ERJ3GEYJ 102 V (1 k) | T | 100.2/78 |
| R355 | 7030003440 | S.RES ERJ3GEYJ 102 V (1 k) | T | 101/75.2 |
| R356 | 7030003440 | S.RES ERJ3GEYJ 102 V (1 k) | T | 128.4/78.7 |
| R357 | 7030003440 | S.RES ERJ3GEYJ 102 V (1 k) | T | 126.7/72.1 |
| R358 | 7030003440 | S.RES ERJ3GEYJ 102 V (1 k) | T | 114.8/75.7 |
| R359 | 7030003440 | S.RES ERJ3GEYJ 102 V (1 k) | T | 116.1/75.4 |
| R360 | 7030003440 | S.RES ERJ3GEYJ 102 V (1 k) | T | 130.1/77.2 |
| R361 | 7030003440 | S.RES ERJ3GEYJ 102 V (1 k) | T | 129.4/74 |
| R362 | 7030003440 | S.RES ERJ3GEYJ 102 V (1 k) | T | 116.4/79.3 |
| R363 | 7030003440 | S.RES ERJ3GEYJ 102 V (1 k) | T | 117.4/75.5 |
| R364 | 7030003640 | S.RES ERJ3GEYJ 473 V (47 k) | T | 61.2/29 |
| R365 | 7030004730 | S.RES ERJ3GEYF 222 V (2.2 k) | T | 61.9/33 |
| R366 | 7030003440 | S.RES ERJ3GEYJ 102 V (1 k) | T | 128.4/64.2 |
| R369 | 7030003860 | S.RES ERJ3GE JPW V | T | 55.7/37.4 |

## [DISPLAY BOARD]

| REF NO. | ORDER NO. | DESCRIPTION | M. | H/V LOCATION |
|---|---|---|---|---|
| R501 | 7030003640 | S.RES ERJ3GEYJ 473 V (47 k) | T | 68.5/16.9 |
| R502 | 7030003640 | S.RES ERJ3GEYJ 473 V (47 k) | T | 67.2/16.9 |
| R503 | 7030003640 | S.RES ERJ3GEYJ 473 V (47 k) | T | 36.1/32.5 |
| R504 | 7030003440 | S.RES ERJ3GEYJ 102 V (1 k) | T | 135.3/62.2 |
| R505 | 7030003360 | S.RES ERJ3GEYJ 221 V (220) | T | 89.2/86.9 |
| R601 | 7030003860 | S.RES ERJ3GE JPW V | T | 44.1/89.8 |
| R602 | 7030003520 | S.RES ERJ3GEYJ 472 V (4.7 k) | T | 41.6/87.6 |
| R603 | 7030003640 | S.RES ERJ3GEYJ 473 V (47 k) | T | 32.4/45.4 |
| R604 | 7030003560 | S.RES ERJ3GEYJ 103 V (10 k) | T | 32.4/46.9 |
| R651 | 7030003650 | S.RES ERJ3GEYJ 563 V (56 k) | T | 114.8/95 |
| R652 | 7030003620 | S.RES ERJ3GEYJ 333 V (33 k) | T | 118.6/95 |
| R653 | 7030003520 | S.RES ERJ3GEYJ 472 V (4.7 k) | T | 44.1/86.1 |
| C8 | 4030011600 | S.CER C1608 JB 1E 104K-T | T | 134.5/74.9 |
| C201 | 4310001170 | MLR ECQE1A 124JBB | | |
| C202 | 4030016880 | S.CER C4520 CH 3F 150KT-A | T | 125.1/37.2 |
| C203 | 4030007020 | S.CER C1608 CH 1H 120J-T | T | 50.5/39.9 |
| C204 | 4030007020 | S.CER C1608 CH 1H 120J-T | T | 47.9/40 |
| C205 | 4030011600 | S.CER C1608 JB 1E 104K-T | T | 27.7/64.4 |
| C206 | 4030011600 | S.CER C1608 JB 1E 104K-T | T | 109/80.8 |
| C207 | 4030011600 | S.CER C1608 JB 1E 104K-T | T | 73.2/22.2 |
| C208 | 4030011600 | S.CER C1608 JB 1E 104K-T | T | 109.5/6.1 |
| C209 | 4030011600 | S.CER C1608 JB 1E 104K-T | T | 124.1/79.9 |
| C210 | 4030011600 | S.CER C1608 JB 1E 104K-T | T | 67.8/56.3 |
| C211 | 4030011600 | S.CER C1608 JB 1E 104K-T | T | 107.7/61.2 |
| C212 | 4510008800 | S.ELE EEE1EA100SR | T | 68.8/61.3 |
| C213 | 4510009150 | S.ELE EEE1EA470WP | T | 77.8/52 |
| C214 | 4510008800 | S.ELE EEE1EA100SR | T | 72.2/67.1 |
| C215 | 4030011600 | S.CER C1608 JB 1E 104K-T | T | 120.9/85.8 |
| C216 | 4030011600 | S.CER C1608 JB 1E 104K-T | T | 58.7/5.2 |
| C217 | 4030011600 | S.CER C1608 JB 1E 104K-T | T | 108.3/83.3 |
| C218 | 4510009150 | S.ELE EEE1EA470WP | T | 99.6/84.8 |
| C219 | 4030006860 | S.CER C1608 JB 1H 102K-T | T | 109.8/83.3 |
| C220 | 4030011600 | S.CER C1608 JB 1E 104K-T | T | 126.2/88.8 |
| C221 | 4030011600 | S.CER C1608 JB 1E 104K-T | T | 103.2/55.1 |
| C222 | 4030011600 | S.CER C1608 JB 1E 104K-T | T | 127.7/15.4 |
| C223 | 4030011600 | S.CER C1608 JB 1E 104K-T | T | 134.7/27.7 |
| C224 | 4030011600 | S.CER C1608 JB 1E 104K-T | T | 48.1/38.2 |
| C225 | 4030011600 | S.CER C1608 JB 1E 104K-T | T | 119.8/61.5 |
| C226 | 4030011600 | S.CER C1608 JB 1E 104K-T | T | 17.2/87.2 |
| C227 | 4030011600 | S.CER C1608 JB 1E 104K-T | T | 120.9/82.9 |
| C228 | 4510008800 | S.ELE EEE1EA100SR | T | 125.5/83.6 |
| C229 | 4030011600 | S.CER C1608 JB 1E 104K-T | T | 7.3/65.1 |
| C230 | 4030006880 | S.CER C1608 JB 1H 472K-T | T | 58.6/29 |
| C231 | 4030011600 | S.CER C1608 JB 1E 104K-T | T | 47.6/17.4 |
| C232 | 4030011600 | S.CER C1608 JB 1E 104K-T | T | 58/31.2 |
| C241 | 4030011600 | S.CER C1608 JB 1E 104K-T | T | 118.9/80.3 |
| C242 | 4030011600 | S.CER C1608 JB 1E 104K-T | T | 116.4/81.2 |
| C243 | 4030011600 | S.CER C1608 JB 1E 104K-T | T | 120.2/80.3 |
| C244 | 4030011600 | S.CER C1608 JB 1E 104K-T | T | 121.1/73 |
| C245 | 4030011600 | S.CER C1608 JB 1E 104K-T | T | 128.4/80 |
| C246 | 4030011600 | S.CER C1608 JB 1E 104K-T | T | 131.3/74.6 |
| C247 | 4030011600 | S.CER C1608 JB 1E 104K-T | T | 130.1/75.9 |
| C248 | 4030011600 | S.CER C1608 JB 1E 104K-T | T | 124.8/73 |
| C249 | 4030011600 | S.CER C1608 JB 1E 104K-T | T | 112.1/6.1 |
| C250 | 4030011600 | S.CER C1608 JB 1E 104K-T | T | 113.5/14.3 |
| C251 | 4030011600 | S.CER C1608 JB 1E 104K-T | T | 112.1/7.4 |
| C252 | 4030011600 | S.CER C1608 JB 1E 104K-T | T | 115.9/6.9 |
| C253 | 4030011600 | S.CER C1608 JB 1E 104K-T | T | 104.1/13.5 |
| C254 | 4030011600 | S.CER C1608 JB 1E 104K-T | T | 109.5/7.4 |
| C255 | 4030011600 | S.CER C1608 JB 1E 104K-T | T | 104.9/8.1 |
| C256 | 4030011600 | S.CER C1608 JB 1E 104K-T | T | 104.9/5.5 |
| C257 | 4030011600 | S.CER C1608 JB 1E 104K-T | T | 72.8/13.4 |
| C258 | 4030011600 | S.CER C1608 JB 1E 104K-T | T | 72.7/16.2 |
| C259 | 4030011600 | S.CER C1608 JB 1E 104K-T | T | 80.2/19 |
| C260 | 4030011600 | S.CER C1608 JB 1E 104K-T | T | 72.4/19.4 |
| C261 | 4030011600 | S.CER C1608 JB 1E 104K-T | T | 76.4/28.1 |
| C262 | 4030011600 | S.CER C1608 JB 1E 104K-T | T | 75.1/28.1 |
| C263 | 4030011600 | S.CER C1608 JB 1E 104K-T | T | 73.3/27.3 |
| C264 | 4030011600 | S.CER C1608 JB 1E 104K-T | T | 72.5/25.5 |
| C265 | 4030011600 | S.CER C1608 JB 1E 104K-T | T | 20.9/52.3 |
| C266 | 4030011600 | S.CER C1608 JB 1E 104K-T | T | 28.4/62.5 |
| C267 | 4030011600 | S.CER C1608 JB 1E 104K-T | T | 21.6/55.8 |
| C268 | 4030011600 | S.CER C1608 JB 1E 104K-T | T | 21.6/57.1 |
| C601 | 4510008800 | S.ELE EEE1EA100SR | T | 29.4/86.2 |
| C602 | 4030011600 | S.CER C1608 JB 1E 104K-T | T | 39.2/41.8 |
| C651 | 4030008890 | S.CER C1608 JB 1H 273K-T | T | 47.9/93.5 |
| C652 | 4030011600 | S.CER C1608 JB 1E 104K-T | T | 50.3/91.9 |
| J1 | 6510021721 | S.CNR 30FLT-SM2-TB (LF) (SN) | T | 13.2/80.7 |
| J2 | 6510021721 | S.CNR 30FLT-SM2-TB (LF) (SN) | T | 8.7/52.4 |
| J3 | 6510022471 | S.CNR 40FLT-SM2-TB (LF) (SN) | T | 131.5/62.7 |
| J4 | 6510020531 | S.CNR 52808-1871 | T | 30.8/8.8 |
| J5 | 6510019971 | S.CNR 52808-1071 | T | 77.7/8.8 |
| J6 | 6510021721 | S.CNR 30FLT-SM2-TB (LF) (SN) | T | 130.9/21.4 |
| J7 | 6510019971 | S.CNR 52808-1071 | T | 55.4/8.8 |
| J201 | 6510022471 | S.CNR 40FLT-SM2-TB (LF) (SN) | T | 6.2/28.7 |
| J202 | 6510022471 | S.CNR 40FLT-SM2-TB (LF) (SN) | T | 18.1/28.7 |
| J203 | 6510020081 | S.CNR 52808-2071 (2090) | T | 113.5/91.2 |
| J205 | 6510003401 | CNR B04B-EH-S (LF) (SN) | | |
| J301 | 6510021181 | S.CNR SM2 (8.0) B-BHS1TB(LF)(SN) | T | 131.7/38.9 |
| J302 | 6510022191 | S.CNR B3B-PH-SM4-TB (LF) (SN) | T | 94.2/7.5 |
| J601 | 6510021861 | CNR BH-800.4GG <LTC> | | |
| T201 | 5910000981 | TSM 3319-T088-LF | | |
| BT601 | 3020000110 | LTM CR2032 | | |

M.=Mounted side (T: Mounted on the Top side, B: Mounted on the Bottom side)
S.=Surface mount

## [RXPLL-A UNIT]

| REF NO. | ORDER NO. | DESCRIPTION | M. | H/V LOCATION |
|---|---|---|---|---|
| IC1 | 1130011530 | S.IC CD74HC4094M96 | T | 11.9/24.1 |
| IC2 | 1130009691 | S.IC TC74HCT7007AF(F) S | T | 22.8/23.3 |
| IC51 | 1180001251 | S.IC TA7808F(TE16L,Q) | T | 77/16.7 |
| IC61 | 1180000421 | S.IC TA78L05F(TE12R,F) | B | 56.5/16 |
| IC101 | 1140007881 | S.IC TC190G08EFG0046JDZ/SC1246A | T | 31.3/89.7 |
| IC102 | 1130003831 | S.IC TC7S04F(TE85R,F) [USA] | T | 33.1/74.7 |
| | 1130003831 | S.IC TC7S04F(TE85R,F) [EUR] | | |
| | 1130003831 | S.IC TC7S04F(TE85R,F) [FRA] | | |
| | 1130003831 | S.IC TC7S04F(TE85R,F) [DEN] | | |
| | 1130003831 | S.IC TC7S04F(TE85R,F) [ITR] | | |
| | 1130003831 | S.IC TC7S04F(TE85R,F) [KOR] | | |
| | 1130003830 | S.IC TC7S04F (TE85R) [ESP] | | |
| | 1130003830 | S.IC TC7S04F (TE85R) [AUS] | | |
| | 1130003831 | S.IC TC7S04F(TE85R,F) [UK] | | |
| | 1130003831 | S.IC TC7S04F(TE85R,F) [RX] | | |
| | 1130003831 | S.IC TC7S04F(TE85R,F) [CHN] | | |
| IC103 | 1130006441 | S.IC TC7S08F(TE85R,F) [USA] | B | 34/92.1 |
| | 1130006441 | S.IC TC7S08F(TE85R,F) [EUR] | | |
| | 1130006441 | S.IC TC7S08F(TE85R,F) [FRA] | | |
| | 1130006441 | S.IC TC7S08F(TE85R,F) [DEN] | | |
| | 1130006441 | S.IC TC7S08F(TE85R,F) [ITR] | | |
| | 1130006441 | S.IC TC7S08F(TE85R,F) [KOR] | | |
| | 1130006440 | S.IC TC7S08F (TE85R) [ESP] | | |
| | 1130006440 | S.IC TC7S08F (TE85R) [AUS] | | |
| | 1130006441 | S.IC TC7S08F(TE85R,F) [UK] | | |
| | 1130006441 | S.IC TC7S08F(TE85R,F) [RX] | | |
| | 1130006441 | S.IC TC7S08F(TE85R,F) [CHN] | | |
| IC104 | 1130003831 | S.IC TC7S04F(TE85R,F) [USA] | T | 31.7/101.1 |
| | 1130003831 | S.IC TC7S04F(TE85R,F) [EUR] | | |
| | 1130003831 | S.IC TC7S04F(TE85R,F) [FRA] | | |
| | 1130003831 | S.IC TC7S04F(TE85R,F) [DEN] | | |
| | 1130003831 | S.IC TC7S04F(TE85R,F) [ITR] | | |
| | 1130003831 | S.IC TC7S04F(TE85R,F) [KOR] | | |
| | 1130003830 | S.IC TC7S04F (TE85R) [ESP] | | |
| | 1130003830 | S.IC TC7S04F (TE85R) [AUS] | | |
| | 1130003831 | S.IC TC7S04F(TE85R,F) [UK] | | |
| | 1130003831 | S.IC TC7S04F(TE85R,F) [RX] | | |
| | 1130003831 | S.IC TC7S04F(TE85R,F) [CHN] | | |
| IC201 | 1130009230 | S.IC LMX2306TMX/NOPB | T | 27.9/38.8 |
| IC501 | 1140007881 | S.IC TC190G08EFG | | |
| | | 0046JDZ/SC1246A | T | 31.3/142.5 |
| IC502 | 1130003831 | S.IC TC7S04F(TE85R,F) [USA] | T | 24.8/127.4 |
| | 1130003831 | S.IC TC7S04F(TE85R,F) [EUR] | | |
| | 1130003831 | S.IC TC7S04F(TE85R,F) [FRA] | | |
| | 1130003831 | S.IC TC7S04F(TE85R,F) [DEN] | | |
| | 1130003831 | S.IC TC7S04F(TE85R,F) [ITR] | | |
| | 1130003831 | S.IC TC7S04F(TE85R,F) [KOR] | | |
| | 1130003830 | S.IC TC7S04F (TE85R) [ESP] | | |
| | 1130003830 | S.IC TC7S04F (TE85R) [AUS] | | |
| | 1130003831 | S.IC TC7S04F(TE85R,F) [UK] | | |
| | 1130003831 | S.IC TC7S04F(TE85R,F) [RX] | | |
| | 1130003831 | S.IC TC7S04F(TE85R,F) [CHN] | | |
| IC503 | 1130003831 | S.IC TC7S04F(TE85R,F) [USA] | T | 31.7/154.1 |
| | 1130003831 | S.IC TC7S04F(TE85R,F) [EUR] | | |
| | 1130003831 | S.IC TC7S04F(TE85R,F) [FRA] | | |
| | 1130003831 | S.IC TC7S04F(TE85R,F) [DEN] | | |
| | 1130003831 | S.IC TC7S04F(TE85R,F) [ITR] | | |
| | 1130003831 | S.IC TC7S04F(TE85R,F) [KOR] | | |
| | 1130003830 | S.IC TC7S04F (TE85R) [ESP] | | |
| | 1130003830 | S.IC TC7S04F (TE85R) [AUS] | | |
| | 1130003831 | S.IC TC7S04F(TE85R,F) [UK] | | |
| | 1130003831 | S.IC TC7S04F(TE85R,F) [RX] | | |
| | 1130003831 | S.IC TC7S04F(TE85R,F) [CHN] | | |
| IC602 | 1130006441 | S.IC TC7S08F(TE85R,F) [USA] | B | 50.6/113.3 |
| | 1130006441 | S.IC TC7S08F(TE85R,F) [EUR] | | |
| | 1130006441 | S.IC TC7S08F(TE85R,F) [FRA] | | |
| | 1130006441 | S.IC TC7S08F(TE85R,F) [DEN] | | |
| | 1130006441 | S.IC TC7S08F(TE85R,F) [ITR] | | |
| | 1130006441 | S.IC TC7S08F(TE85R,F) [KOR] | | |
| | 1130006440 | S.IC TC7S08F (TE85R) [ESP] | | |
| | 1130006440 | S.IC TC7S08F (TE85R) [AUS] | | |
| | 1130006441 | S.IC TC7S08F(TE85R,F) [UK] | | |
| | 1130006441 | S.IC TC7S08F(TE85R,F) [RX] | | |
| | 1130006441 | S.IC TC7S08F(TE85R,F) [CHN] | | |
| IC651 | 1140004550 | S.IC M65343FP/SC1287 | T | 22.6/169.2 |
| IC652 | 1130003831 | S.IC TC7S04F(TE85R,F) [USA] | T | 13.7/163.7 |
| | 1130003831 | S.IC TC7S04F(TE85R,F) [EUR] | | |
| | 1130003831 | S.IC TC7S04F(TE85R,F) [FRA] | | |
| | 1130003831 | S.IC TC7S04F(TE85R,F) [DEN] | | |
| | 1130003831 | S.IC TC7S04F(TE85R,F) [ITR] | | |
| | 1130003831 | S.IC TC7S04F(TE85R,F) [KOR] | | |
| | 1130003830 | S.IC TC7S04F (TE85R) [ESP] | | |
| | 1130003830 | S.IC TC7S04F (TE85R) [AUS] | | |
| | 1130003831 | S.IC TC7S04F(TE85R,F) [UK] | | |
| | 1130003831 | S.IC TC7S04F(TE85R,F) [RX] | | |
| | 1130003831 | S.IC TC7S04F(TE85R,F) [CHN] | | |
| IC1051 | 1190002010 | S.IC SD5400CY <TOMO> | T | 176.9/99.9 |
| IC1081 | 1110006180 | S.IC UPG2009TB-E3 | B | 151.6/85.1 |
| IC1402 | 1190002110 | S.IC NJG1519KC1-TE3-#ZZZB | T | 117.3/69.5 |
| IC1403 | 1190002110 | S.IC NJG1519KC1-TE3-#ZZZB | T | 113.4/106.3 |
| IC1501 | 1110006121 | S.IC DBM9A41-G-TR | T | 121.2/124.5 |
| IC1502 | 1110006121 | S.IC DBM9A41-G-TR | T | 121.2/133 |
| IC1503 | 1110006100 | S.IC NJM5534MD-TE1-#ZZZB | T | 138.4/151.7 |
| IC1504 | 1110006100 | S.IC NJM5534MD-TE1-#ZZZB | T | 119.2/151.7 |
| IC1505 | 1110006190 | S.IC NJM074M-TE1-#ZZZB | T | 128.8/166.9 |
| IC1506 | 1110006100 | S.IC NJM5534MD-TE1-#ZZZB | T | 128.8/175.6 |
| IC1651 | 1130011921 | S.IC TC74LCX00F(EL,F) | T | 110/126.2 |
| IC1652 | 1110005420 | S.IC BA15532F-E2 | T | 139.8/175.6 |
| IC1653 | 1110005100 | S.IC NJM072BM-TE1-#ZZZB | B | 140/172 |
| IC1701 | 1130011530 | S.IC CD74HC4094M96 | T | 158/166.7 |
| IC1702 | 1130011530 | S.IC CD74HC4094M96 | T | 148.9/166.7 |
| IC1703 | 1160000131 | S.IC TD62783AFG(5,S,EL) | T | 157.3/154.8 |
| IC1704 | 1180000790 | S.IC AN78L10M(E1) | B | 183.2/159.8 |

## [RXPLL-A UNIT]

| REF NO. | ORDER NO. | DESCRIPTION | M. | H/V LOCATION |
|---|---|---|---|---|
| Q1 | 1590001050 | S.TRA DTC114TUA T106 | B | 30.3/22.6 |
| Q30 | 1530002060 | S.TRA 2SC4081 T106 R | T | 22.3/110.9 |
| Q41 | 1590000680 | S.TRA DTC114EUA T106 | T | 12.8/34.2 |
| Q150 | 1560000331 | S.FET 2SK210-GR(TE85R,F) | T | 26.9/53 |
| Q151 | 1530002280 | S.TRA 2SC4081 T106 S | B | 33.6/57.2 |
| Q152 | 1530002280 | S.TRA 2SC4081 T106 S | B | 30.8/78.2 |
| Q201 | 1590001330 | S.TRA DTA114EUA T106 | T | 29.6/34.1 |
| Q220 | 1560000331 | S.FET 2SK210-GR(TE85R,F) | T | 72.5/33.9 |
| Q230 | 1560000331 | S.FET 2SK210-GR(TE85R,F) | T | 72.5/46.4 |
| Q240 | 1560000331 | S.FET 2SK210-GR(TE85R,F) | T | 72.5/58.9 |
| Q250 | 1560000331 | S.FET 2SK210-GR(TE85R,F) | T | 72.5/71.4 |
| Q260 | 1560000331 | S.FET 2SK210-GR(TE85R,F) | T | 72.5/83.9 |
| Q270 | 1560000331 | S.FET 2SK210-GR(TE85R,F) | T | 72.5/95.8 |
| Q280 | 1590000680 | S.TRA DTC114EUA T106 | T | 82.3/34.4 |
| Q281 | 1590000680 | S.TRA DTC114EUA T106 | T | 82.3/46.9 |
| Q282 | 1590000680 | S.TRA DTC114EUA T106 | T | 82.3/59.4 |
| Q283 | 1590000680 | S.TRA DTC114EUA T106 | T | 82.3/71.9 |
| Q284 | 1590000680 | S.TRA DTC114EUA T106 | T | 82.3/84.4 |
| Q285 | 1590000680 | S.TRA DTC114EUA T106 | T | 82.3/96.4 |
| Q301 | 1530003432 | S.TRA 2SC5226A-4-TL-E | T | 92.1/30.1 |
| Q302 | 1530003432 | S.TRA 2SC5226A-4-TL-E | B | 89.1/42.5 |
| Q303 | 1530003432 | S.TRA 2SC5226A-4-TL-E | B | 91.3/25.1 |
| Q341 | 1590000680 | S.TRA DTC114EUA T106 | T | 86.3/36.7 |
| Q351 | 1580000751 | S.FET 3SK294(TE85L,F) | T | 92.1/56.9 |
| Q352 | 1530003432 | S.TRA 2SC5226A-4-TL-E | B | 89.2/64.5 |
| Q363 | 1590000680 | S.TRA DTC114EUA T106 | T | 86.8/54.3 |
| Q364 | 1590001330 | S.TRA DTA114EUA T106 | T | 86.8/57.4 |
| Q421 | 1590000680 | S.TRA DTC114EUA T106 | B | 96.2/91.6 |
| Q422 | 1590000680 | S.TRA DTC114EUA T106 | B | 92.6/91.6 |
| Q441 | 1590000680 | S.TRA DTC114EUA T106 | T | 86.5/73.7 |
| Q502 | 1590000680 | S.TRA DTC114EUA T106 | T | 41.9/128.8 |
| Q540 | 1530002060 | S.TRA 2SC4081 T106 R | B | 58.7/141.2 |
| Q541 | 1560000331 | S.FET 2SK210-GR(TE85R,F) | T | 68.9/142.8 |
| Q561 | 1530003432 | S.TRA 2SC5226A-4-TL-E | T | 70.6/153.8 |
| Q580 | 1530003432 | S.TRA 2SC5226A-4-TL-E | T | 41.7/147.4 |
| Q591 | 1530003151 | S.TRA 2SC4673D-TD-E | T | 61.7/166.5 |
| Q592 | 1520000561 | S.TRA 2SB1123 T-TD-E | B | 52/165.3 |
| Q593 | 1590000680 | S.TRA DTC114EUA T106 | B | 54.8/171.2 |
| Q680 | 1530002060 | S.TRA 2SC4081 T106 R | T | 37.5/163.2 |
| Q702 | 1530002601 | S.TRA 2SC4215-O(TE85R,F) | T | 31.4/110.9 |
| Q801 | 1560000561 | S.FET 2SK882-GR(TE85L,F) | T | 82.8/147.3 |
| Q811 | 1560000561 | S.FET 2SK882-GR(TE85L,F) | T | 77.4/177.6 |
| Q831 | 1560000561 | S.FET 2SK882-GR(TE85L,F) | T | 88.7/155.1 |
| Q832 | 1520000561 | S.TRA 2SB1123 T-TD-E | B | 77.9/167.1 |
| Q833 | 1590000680 | S.TRA DTC114EUA T106 | B | 73.5/162.5 |
| Q1001 | 1530003851 | S.TRA 2SC5551A-F-E | B | 174/9 |
| Q1004 | 1590001960 | S.TRA XP4311(TX) | T | 150/18.8 |
| Q1005 | 1590001960 | S.TRA XP4311(TX) | T | 145.9/18.8 |
| Q1006 | 1530003851 | S.TRA 2SC5551A-F-E | B | 150/37.6 |
| Q1007 | 1530003851 | S.TRA 2SC5551A-F-E | B | 176.5/42.5 |
| Q1008 | 1530003851 | S.TRA 2SC5551A-F-E | B | 160.5/42.5 |
| Q1101 | 1530003860 | TRA 2SC3950D | | |
| Q1102 | 1590000680 | S.TRA DTC114EUA T106 | T | 165.5/133.8 |
| Q1103 | 1520000561 | S.TRA 2SB1123 T-TD-E | B | 168.6/127.8 |
| Q1104 | 1530003860 | TRA 2SC3950D | | |
| Q1105 | 1530003842 | S.TRA 2SC5501A-4-TR-E | T | 166.5/142.1 |
| Q1205 | 1590001960 | S.TRA XP4311(TX) | T | 158.8/55.6 |
| Q1209 | 1530003851 | S.TRA 2SC5551A-F-E | B | 121/34.9 |
| Q1210 | 1530003851 | S.TRA 2SC5551A-F-E | B | 111.5/34.9 |
| Q1211 | 1560001311 | S.FET MMBFU310LT1G | T | 159.5/96.4 |
| Q1212 | 1560001311 | S.FET MMBFU310LT1G | T | 153.5/96.4 |
| Q1213 | 1590000680 | S.TRA DTC114EUA T106 | B | 156.9/123.7 |
| Q1214 | 1520000561 | S.TRA 2SB1123 T-TD-E | B | 155.4/113.5 |
| Q1301 | 1530003151 | S.TRA 2SC4673D-TD-E | T | 157.8/120 |
| Q1352 | 1530003851 | S.TRA 2SC5551A-F-E | B | 140/66.7 |
| Q1401 | 1530003842 | S.TRA 2SC5501A-4-TR-E | T | 131.9/105.8 |
| Q1402 | 1530003021 | S.TRA 2SC4402-3-TL-E | T | 123.4/111.8 |
| Q1403 | 1530003021 | S.TRA 2SC4402-3-TL-E | T | 123.4/114.3 |
| Q1501 | 1530003450 | S.TRA 2SC4835G R(TX) | T | 133.5/143.5 |
| Q1502 | 1530003450 | S.TRA 2SC4835G R(TX) | T | 120.4/143.5 |
| Q1651 | 1530002601 | S.TRA 2SC4215-O(TE85R,F) | B | 105.6/140.3 |
| Q1701 | 1590001960 | S.TRA XP4311(TX) | T | 106.6/43.9 |
| Q1702 | 1590001960 | S.TRA XP4311(TX) | T | 148.9/147.2 |
| Q1703 | 1590001960 | S.TRA XP4311(TX) | T | 146.4/147.2 |
| D101 | 1750000520 | S.DIO DAN222TL | T | 41.8/86.2 |
| D152 | 1720000590 | S.VAR MA357(TX) | T | 17.6/59.9 |
| D153 | 1790000491 | S.DIO HSM88ASTR-E | T | 27.2/60.4 |
| D154 | 1790000491 | S.DIO HSM88ASTR-E | T | 27.2/63.8 |
| D201 | 1750000520 | S.DIO DAN222TL | T | 32.4/34.1 |
| D220 | 1720000590 | S.VAR MA357(TX) | T | 50.8/31.8 |
| D221 | 1720000590 | S.VAR MA357(TX) | T | 52.9/31.8 |
| D222 | 1790000620 | S.DIO MA77(TX) | T | 82.6/29.8 |
| D230 | 1720000590 | S.VAR MA357(TX) | T | 50.8/44.2 |
| D231 | 1720000590 | S.VAR MA357(TX) | T | 52.9/44.2 |
| D232 | 1790000620 | S.DIO MA77(TX) | T | 82.6/42.3 |
| D240 | 1720000590 | S.VAR MA357(TX) | T | 50.8/56.7 |
| D241 | 1720000590 | S.VAR MA357(TX) | T | 52.9/56.7 |
| D242 | 1790000620 | S.DIO MA77(TX) | T | 82.6/54.8 |
| D250 | 1720000590 | S.VAR MA357(TX) | T | 50.8/69.2 |
| D252 | 1790000620 | S.DIO MA77(TX) | T | 82.6/67.3 |
| D261 | 1720000590 | S.VAR MA357(TX) | T | 52.9/81.7 |
| D262 | 1790000620 | S.DIO MA77(TX) | T | 82.6/79.8 |
| D270 | 1720000590 | S.VAR MA357(TX) | T | 50.8/94.2 |
| D271 | 1720000590 | S.VAR MA357(TX) | T | 52.4/96.7 |
| D272 | 1790000620 | S.DIO MA77(TX) | T | 82.5/92 |
| D341 | 1790000620 | S.DIO MA77(TX) | T | 90/37.2 |
| D342 | 1160000070 | S.DIO DAN202K T146 | B | 81.1/47.7 |
| D362 | 1790000620 | S.DIO MA77(TX) | T | 88.3/65.5 |
| D363 | 1790000620 | S.DIO MA77(TX) | T | 88.3/62 |
| D421 | 1790000620 | S.DIO MA77(TX) | T | 91.9/85 |
| D422 | 1790000620 | S.DIO MA77(TX) | T | 88.6/85 |
| D423 | 1790000620 | S.DIO MA77(TX) | T | 92.5/91.2 |

M.=Mounted side (T: Mounted on the Top side, B: Mounted on the Bottom side)
S.=Surface mount

## [RXPLL-A UNIT]

| REF NO. | ORDER NO. | DESCRIPTION | | M. | H/V LOCATION |
|---|---|---|---|---|---|
| D424 | 1790000620 | S.DIO | MA77(TX) | T | 88.9/91.2 |
| D441 | 1790000620 | S.DIO | MA77(TX) | T | 89.6/74.4 |
| D501 | 1750000520 | S.DIO | DAN222TL | T | 42/132 |
| D542 | 1720000590 | S.VAR | MA357(TX) | T | 62.5/139.6 |
| D821 | 1750000431 | S.DIO | HSB88WSTR-E | T | 84.1/169.4 |
| D1001 | 1750000581 | S.DIO | 1SV307(TPH3,F) | T | 181.9/65.7 |
| D1101 | 1790000620 | S.DIO | MA77(TX) | T | 177.6/146.6 |
| D1102 | 1790000620 | S.DIO | MA77(TX) | T | 177.6/148.4 |
| D1201 | 1750000581 | S.DIO | 1SV307(TPH3,F) | T | 139.1/57.7 |
| D1351 | 1750000581 | S.DIO | 1SV307(TPH3,F) | T | 140.8/71.1 |
| D1653 | 1750000550 | S.DIO | 1SS355 TE-17 | T | 138.9/167.2 |
| D1654 | 1750000550 | S.DIO | 1SS355 TE-17 | T | 142.5/167.2 |
| D1701 | 1790001670 | S.DIO | RB706F-40T106 | T | 170.5/160.8 |
| FI101 | 2020001820 | S.CER | SFECV10M5FA00-R0 (SFECV10.5MA5S) | T | 26/73.9 |
| FI831 | 2030000300 | S.MON | DSF753SBF 64.491 MHz(FL-356) | T | 91.6/162.1 |
| FI1401 | 2030000281 | S.MON | DSF753SDF 64.455 MHz (FL-364A) | T | 116.3/88.5 |
| FI1402 | 2030000331 | S.MON | DSF753SDF 64.455 MHz (FL-358A) | T | 107/88.5 |
| FI1403 | 2030000510 | S.MON | DSF753SDF 64.455 MHz (FL-396) | T | 126/85.5 |
| L1 | 6200003261 | S.COI | NLV32T-101J | T | 10.8/15.4 |
| L2 | 6200003261 | S.COI | NLV32T-101J | T | 29/19.9 |
| L10 | 6200003950 | S.COI | HF50ACC 322513-T | T | 38.6/14.7 |
| L11 | 6200003950 | S.COI | HF50ACC 322513-T | T | 13.8/15.4 |
| L12 | 6200003950 | S.COI | HF50ACC 322513-T | T | 16.8/15.4 |
| L13 | 6200003950 | S.COI | HF50ACC 322513-T | T | 29/15.4 |
| L20 | 6200003321 | S.COI | NLV32T-3R3J | T | 85.9/123.8 |
| L30 | 6200005491 | S.COI | NLV32T-331J | T | 20.6/120 |
| L101 | 6200001831 | S.COI | NLV32T-100J | T | 38.3/72.8 |
| L151 | 6130002970 | COI | LB-343 | | |
| L152 | 6200001831 | S.COI | NLV32T-100J | T | 30/54.5 |
| L201 | 6200005011 | S.COI | NLV25T-100J | T | 22.2/45 |
| L211 | 6200003661 | S.COI | NLV25T-R68J | B | 45.4/35.3 |
| L220 | 6200010790 | S.COI | C2520C-3R9G-A | T | 51.9/37.5 |
| L221 | 6190001421 | COI | #E526GN-110502 | | |
| L222 | 6200010790 | S.COI | C2520C-3R9G-A | T | 76.2/37.7 |
| L230 | 6200010830 | S.COI | C2520C-3R3G-A | T | 51.9/50 |
| L231 | 6190001421 | COI | #E526GN-110502 | | |
| L232 | 6200010830 | S.COI | C2520C-3R3G-A | T | 76.2/50.2 |
| L240 | 6200010830 | S.COI | C2520C-3R3G-A | T | 51.9/62.4 |
| L241 | 6190001421 | COI | #E526GN-110502 | | |
| L242 | 6200010830 | S.COI | C2520C-3R3G-A | T | 76.2/62.7 |
| L250 | 6200010820 | S.COI | C2520C-2R7G-A | T | 51.9/74.9 |
| L251 | 6190001421 | COI | #E526GN-110502 | | |
| L252 | 6200010820 | S.COI | C2520C-2R7G-A | T | 76.2/75.2 |
| L260 | 6200010820 | S.COI | C2520C-2R7G-A | T | 51.9/87.4 |
| L261 | 6190001411 | COI | #E526GN-110501 | | |
| L262 | 6200010820 | S.COI | C2520C-2R7G-A | T | 76.2/87.7 |
| L270 | 6200010810 | S.COI | C2520C-2R2G-A | T | 51.9/99.8 |
| L271 | 6190001411 | COI | #E526GN-110501 | | |
| L272 | 6200010810 | S.COI | C2520C-2R2G-A | T | 76/100.2 |
| L280 | 6200005011 | S.COI | NLV25T-100J | T | 67.4/25.5 |
| L302 | 6200001831 | S.COI | NLV32T-100J | T | 89.3/42.6 |
| L331 | 6200002641 | S.COI | NLV25T-R15J | T | 95.1/34.1 |
| L332 | 6200002411 | S.COI | NLV25T-056J | B | 93.2/36 |
| L341 | 6200003261 | S.COI | NLV32T-101J | T | 87/39.6 |
| L351 | 6200001831 | S.COI | NLV32T-100J | T | 91.3/62 |
| L421 | 6200008641 | S.COI | NLV32T-391J | T | 87/81 |
| L441 | 6200002601 | S.COI | NLV25T-047J | T | 91.9/72.3 |
| L442 | 6200010730 | S.COI | C2520C-68NG-A | T | 90.5/78.2 |
| L451 | 6200002641 | S.COI | NLV25T-R15J | T | 95/81 |
| L452 | 6200003261 | S.COI | NLV32T-101J | T | 87/78 |
| L501 | 6200001831 | S.COI | NLV32T-100J | T | 31/125.8 |
| L530 | 6200003171 | S.COI | NLV32T-330J | T | 14.6/134.9 |
| L531 | 6200003171 | S.COI | NLV32T-330J | T | 14.6/130.8 |
| L532 | 6200003171 | S.COI | NLV32T-330J | T | 15.5/127.1 |
| L541 | 6200010790 | S.COI | C2520C-3R9G-A | T | 56.3/139.6 |
| L542 | 6190001421 | COI | #E526GN-110502 | | |
| L543 | 6200010790 | S.COI | C2520C-3R9G-A | T | 68.4/147.9 |
| L544 | 6200003261 | S.COI | NLV32T-101J | B | 65.9/142.1 |
| L545 | 6200003261 | S.COI | NLV32T-101J | B | 51.3/139.6 |
| L561 | 6200003261 | S.COI | NLV32T-101J | B | 64/156 |
| L562 | 6200001831 | S.COI | NLV32T-100J | B | 74.6/151.8 |
| L565 | 6150004250 | COI | LS-471A (C-14922) | | |
| L566 | 6150004250 | COI | LS-471A (C-14922) | | |
| L591 | 6200007790 | S.COI | LQW2BHNR15J03L | T | 60.5/171.5 |
| L651 | 6200001831 | S.COI | NLV32T-100J | T | 15.5/176.3 |
| L681 | 6200005491 | S.COI | NLV32T-331J | T | 37.4/176.2 |
| L682 | 6200008641 | S.COI | NLV32T-391J | T | 37.8/172.6 |
| L683 | 6200008641 | S.COI | NLV32T-391J | T | 40.2/166.2 |
| L701 | 6200003261 | S.COI | NLV32T-101J | T | 23.6/120 |
| L702 | 6150004971 | S.COI | LS-522-LF | T | 37.6/108.6 |
| L703 | 6150004971 | S.COI | LS-522-LF | T | 37.5/118.5 |
| L801 | 6150004280 | COI | LS-484B (C-14927) | | |
| L812 | 6200003231 | S.COI | NLV32T-181J | B | 75.3/174.1 |
| L821 | 6140003530 | COI | LR-395 | | |
| L822 | 6140003530 | COI | LR-395 | | |
| L831 | 6140003770 | S.COI | LR-414 4KBL (STP-01435) | T | 91.6/171.6 |
| L834 | 6150004280 | COI | LS-484B (C-14927) | | |
| L1001 | 6190001650 | COI | ELC06D102E | | |
| L1002 | 6140004400 | COI | LR-499 | | |
| L1004 | 6140003890 | COI | LR-488 | | |
| L1005 | 6180001000 | COI | LAL 04NA 102K | | |
| L1006 | 6140003900 | COI | LR-489 | | |
| L1007 | 6140003800 | COI | LR-439 | | |
| L1008 | 6190001650 | COI | ELC06D102E | | |
| L1009 | 6190001650 | COI | ELC06D102E | | |
| L1010 | 6140003880 | COI | LR-486 | | |

## [RXPLL-A UNIT]

| REF NO. | ORDER NO. | DESCRIPTION | | M. | H/V LOCATION |
|---|---|---|---|---|---|
| L1011 | 6140003880 | COI | LR-486 | | |
| L1012 | 6140003800 | COI | LR-439 | | |
| L1013 | 6200010680 | S.COI | C2520C-R22G-A (0.22U) | T | 155/55.2 |
| L1014 | 6200010680 | S.COI | C2520C-R22G-A (0.22U) | T | 157.9/12.4 |
| L1015 | 6200007790 | S.COI | LQW2BHNR15J03L | B | 163.5/27.5 |
| L1052 | 6200010740 | S.COI | C2520C-R27G-A | T | 177.8/74.6 |
| L1053 | 6200010740 | S.COI | C2520C-R27G-A | T | 173.8/73.5 |
| L1054 | 6200010740 | S.COI | C2520C-R27G-A | T | 169.4/72.6 |
| L1055 | 6140003960 | COI | LR-495 | | |
| L1056 | 6200010730 | S.COI | C2520C-68NG-A | T | 171/83.8 |
| L1058 | 6190001631 | COI | #E544EN-100021 | | |
| L1060 | 6200010730 | S.COI | C2520C-68NG-A | T | 149.1/76.4 |
| L1062 | 6200011450 | S.COI | C2520C-R39G-A | T | 145.1/81.4 |
| L1063 | 6200010650 | S.COI | C2520C-R12G-A (0.12U) | T | 140.9/82.5 |
| L1071 | 6200007780 | S.COI | LQW2BHNR12J03L | B | 164.9/79.2 |
| L1072 | 6200007780 | S.COI | LQW2BHNR12J03L | B | 168/76.1 |
| L1091 | 6200003950 | S.COI | HF50ACC 322513-T | B | 171/149 |
| L1092 | 6200003950 | S.COI | HF50ACC 322513-T | T | 149.7/136.5 |
| L1093 | 6200003950 | S.COI | HF50ACC 322513-T | T | 157/135.2 |
| L1101 | 6140003920 | COI | LR-491 | | |
| L1102 | 6200010650 | S.COI | C2520C-R12G-A (0.12U) | T | 176.9/117.9 |
| L1103 | 6180001250 | COI | LAL 04NA 3R3K | | |
| L1104 | 6200010870 | S.COI | C2520C-R33G-A (0.33U) | T | 178.3/135.9 |
| L1105 | 6140003910 | COI | LR-490 | | |
| L1151 | 6140004640 | COI | LR-519 | | |
| L1201 | 6200007780 | S.COI | LQW2BHNR12J03L | B | 119.3/17.4 |
| L1208 | 6140003800 | COI | LR-439 | | |
| L1209 | 6200001831 | S.COI | NLV32T-100J | T | 121.1/20.8 |
| L1210 | 6140004440 | COI | LR-503 | | |
| L1211 | 6200009690 | S.COI | LQH43CN101K03L | T | 115.7/34.6 |
| L1212 | 6200001831 | S.COI | NLV32T-100J | T | 106.8/20.8 |
| L1213 | 6140004440 | COI | LR-503 | | |
| L1214 | 6200009690 | S.COI | LQH43CN101K03L | T | 105.9/34.8 |
| L1216 | 6140003800 | COI | LR-439 | | |
| L1217 | 6200007750 | S.COI | LQW2BHN56NJ03L | T | 147.9/63.7 |
| L1218 | 6200007770 | S.COI | LQW2BHNR10J03L | T | 153.3/65.1 |
| L1219 | 6200007790 | S.COI | LQW2BHNR15J03L | T | 153.2/68.4 |
| L1220 | 6140000930 | COI | LR-116 | | |
| L1221 | 6200003261 | S.COI | NLV32T-101J | B | 149.5/110.9 |
| L1222 | 6150001770 | COI | LS-198 | | |
| L1223 | 6200007750 | S.COI | LQW2BHN56NJ03L | B | 151.3/100.7 |
| L1228 | 6200010870 | S.COI | C2520C-R33G-A (0.33U) | T | 158.7/71.3 |
| L1229 | 6200003950 | S.COI | HF50ACC 322513-T | B | 164.7/115 |
| L1301 | 6200008090 | S.COI | LQW2BHN68NJ03L | T | 157.1/111.9 |
| L1302 | 6200008090 | S.COI | LQW2BHN68NJ03L | T | 156.4/115.5 |
| L1303 | 6200008090 | S.COI | LQW2BHN68NJ03L | T | 153.4/117.5 |
| L1304 | 6200010870 | S.COI | C2520C-R33G-A (0.33U) | T | 153.8/123 |
| L1305 | 6200003001 | S.COI | NLV32T-R22J | T | 159.2/124.5 |
| L1306 | 6200001831 | S.COI | NLV32T-100J | B | 152.7/118.6 |
| L1307 | 6200003001 | S.COI | NLV32T-R22J | T | 153.3/112 |
| L1351 | 6200001831 | S.COI | NLV32T-100J | T | 143/76.4 |
| L1353 | 6200010740 | S.COI | C2520C-R27G-A | T | 141.6/67.5 |
| L1354 | 6200001831 | S.COI | NLV32T-100J | T | 136.4/68 |
| L1401 | 6150004280 | COI | LS-484B (C-14927) | | |
| L1402 | 6150004280 | COI | LS-484B (C-14927) | | |
| L1403 | 6150004280 | COI | LS-484B (C-14927) | | |
| L1404 | 6150004280 | COI | LS-484B (C-14927) | | |
| L1405 | 6200007770 | S.COI | LQW2BHNR10J03L | B | 112.5/111.4 |
| L1406 | 6200007750 | S.COI | LQW2BHN56NJ03L | B | 116.6/111.4 |
| L1407 | 6140003930 | COI | LR-492 | | |
| L1408 | 6190001621 | COI | #E544EN-100028 | | |
| L1409 | 6200003191 | S.COI | NLV32T-470J | B | 135.8/125.4 |
| L1410 | 6150004280 | COI | LS-484B (C-14927) | | |
| L1411 | 6150004280 | COI | LS-484B (C-14927) | | |
| L1501 | 6200003520 | S.COI | ELJFB 102K-F | T | 142.1/145.1 |
| L1652 | 6200002520 | S.COI | ELJNC R18K-F | T | 112.9/133.1 |
| L1653 | 6200001831 | S.COI | NLV32T-100J | B | 105.4/124.6 |
| L1654 | 6200001831 | S.COI | NLV32T-100J | B | 112.4/141.9 |
| L1655 | 6200001831 | S.COI | NLV32T-100J | B | 124.7/139.8 |
| L1701 | 6200001831 | S.COI | NLV32T-100J | T | 167/160 |
| L1702 | 6200003950 | S.COI | HF50ACC 322513-T | T | 175.6/169.8 |
| L1703 | 6200003950 | S.COI | HF50ACC 322513-T | T | 172.6/169.8 |
| L1704 | 6200003950 | S.COI | HF50ACC 322513-T | T | 169.6/169.8 |
| L1705 | 6200003950 | S.COI | HF50ACC 322513-T | T | 165.5/169.8 |
| L1803 | 6200003950 | S.COI | HF50ACC 322513-T | B | 132/54.8 |
| L1804 | 6200003950 | S.COI | HF50ACC 322513-T | B | 118/154.8 |
| L1805 | 6200003950 | S.COI | HF50ACC 322513-T | B | 155.2/132 |
| L1807 | 6200003950 | S.COI | HF50ACC 322513-T | B | 118/151.3 |
| L1808 | 6200003950 | S.COI | HF50ACC 322513-T | B | 141.3/162 |
| L1809 | 6200003950 | S.COI | HF50ACC 322513-T | B | 149.5/115.6 |
| R1 | 7030005871 | S.RES | ERA3YKD 104V (100K) | T | 32.5/19.2 |
| R2 | 7030005321 | S.RES | ERA3YED 103V (10K) | T | 31.2/19.2 |
| R3 | 7030003550 | S.RES | ERJ3GEYJ 822 V (8.2K) | T | 16.9/23.5 |
| R4 | 7030003550 | S.RES | ERJ3GEYJ 822 V (8.2K) | T | 16.9/24.8 |
| R5 | 7030003550 | S.RES | ERJ3GEYJ 822 V (8.2K) | T | 13.3/31.3 |
| R6 | 7030003550 | S.RES | ERJ3GEYJ 822 V (8.2K) | T | 13.3/30 |
| R7 | 7030003500 | S.RES | ERJ3GEYJ 332 V (3.3K) | B | 26.7/12.9 |
| R8 | 7030003470 | S.RES | ERJ3GEYJ 182 V (1.8K) | B | 28.2/14.6 |
| R9 | 7030003680 | S.RES | ERJ3GEYJ 104 V (100K) | B | 27.5/10.6 |
| R10 | 7030003360 | S.RES | ERJ3GEYJ 221 V (220) | T | 19/16 |
| R11 | 7030003360 | S.RES | ERJ3GEYJ 221 V (220) | T | 20.3/16 |
| R12 | 7030003360 | S.RES | ERJ3GEYJ 221 V (220) | T | 22.4/16 |
| R13 | 7030003360 | S.RES | ERJ3GEYJ 221 V (220) | T | 23.7/16 |
| R14 | 7030003360 | S.RES | ERJ3GEYJ 221 V (220) | T | 25/16 |
| R15 | 7030003360 | S.RES | ERJ3GEYJ 221 V (220) | T | 26.4/16.2 |
| R16 | 7030003360 | S.RES | ERJ3GEYJ 221 V (220) | T | 32.5/15.4 |
| R17 | 7030003360 | S.RES | ERJ3GEYJ 221 V (220) | T | 33.8/15.4 |
| R30 | 7030003240 | S.RES | ERJ3GEYJ 220 V (22) | T | 21.7/113.7 |
| R31 | 7030003600 | S.RES | ERJ3GEYJ 223 V (22K) | T | 20.4/111.1 |
| R32 | 7030003320 | S.RES | ERJ3GEYJ 101 V (100) | T | 23/113.7 |
| R33 | 7030003340 | S.RES | ERJ3GEYJ 151 V (150) | T | 19.1/115 |
| R51 | 7030011030 | S.RES | ERJ1TYJ 270U (27) | T | 66.3/13.9 |

M.=Mounted side (T: Mounted on the Top side, B: Mounted on the Bottom side)
S.=Surface mount

## [RXPLL-A UNIT]

| REF NO. | ORDER NO. | DESCRIPTION | M. | H/V LOCATION |
|---|---|---|---|---|
| R52 | 7030010550 | S.RES ERJ1TYJ 820U (82) | B | 66.3/13.9 |
| R61 | 7030011030 | S.RES ERJ1TYJ 270U (27) | T | 45.1/13.9 |
| R100 | 7030003860 | S.RES ERJ3GE JPW V | T | 35.4/101.5 |
| R101 | 7030003740 | S.RES ERJ3GEYJ 334 V (330K) | T | 34.1/101.5 |
| R103 | 7030007230 | S.RES ERA3YED 102V (1K) | T | 25.1/100.3 |
| R104 | 7030007230 | S.RES ERA3YED 102V (1K) | T | 26.4/100.3 |
| R105 | 7030007230 | S.RES ERA3YED 102V (1K) | T | 27.8/100.3 |
| R106 | 7030003360 | S.RES ERJ3GEYJ 221 V (220) | T | 29.1/100.3 |
| R107 | 7030003320 | S.RES ERJ3GEYJ 101 V (100) | T | 38/101.5 |
| R108 | 7030007230 | S.RES ERA3YED 102V (1K) | T | 28.9/79 |
| R109 | 7030007230 | S.RES ERA3YED 102V (1K) | T | 41.9/84.5 |
| R110 | 7030007220 | S.RES ERA3YED 202V (2K) | T | 14.6/100.5 |
| R111 | 7030007220 | S.RES ERA3YED 202V (2K) | T | 17.2/100.5 |
| R112 | 7030007220 | S.RES ERA3YED 202V (2K) | T | 17.2/99.2 |
| R113 | 7030007220 | S.RES ERA3YED 202V (2K) | T | 17.2/97.9 |
| R114 | 7030007220 | S.RES ERA3YED 202V (2K) | T | 17.2/96.6 |
| R115 | 7030007220 | S.RES ERA3YED 202V (2K) | T | 17.2/95.2 |
| R116 | 7030007220 | S.RES ERA3YED 202V (2K) | T | 17.2/93.9 |
| R117 | 7030007220 | S.RES ERA3YED 202V (2K) | T | 17.2/92.6 |
| R118 | 7030007200 | S.RES ERA3YEB 202V (2K) | T | 17.2/91.3 |
| R119 | 7030007200 | S.RES ERA3YEB 202V (2K) | T | 17.2/89.6 |
| R120 | 7030007200 | S.RES ERA3YEB 202V (2K) | T | 17.2/87 |
| R121 | 7030007200 | S.RES ERA3YEB 202V (2K) | T | 17.2/84.4 |
| R122 | 7030007200 | S.RES ERA3YEB 202V (2K) | T | 17.2/81.8 |
| R123 | 7030007230 | S.RES ERA3YED 102V (1K) | T | 14.6/99.2 |
| R124 | 7030007230 | S.RES ERA3YED 102V (1K) | T | 14.6/97.9 |
| R125 | 7030007230 | S.RES ERA3YED 102V (1K) | T | 14.6/96.6 |
| R126 | 7030007230 | S.RES ERA3YED 102V (1K) | T | 14.6/95.2 |
| R127 | 7030007230 | S.RES ERA3YED 102V (1K) | T | 14.6/93.9 |
| R128 | 7030007230 | S.RES ERA3YED 102V (1K) | T | 14.6/92.6 |
| R129 | 7030007210 | S.RES ERA3YEB 102V (1K) | T | 14.6/91.3 |
| R130 | 7030007210 | S.RES ERA3YEB 102V (1K) | T | 14.6/89.6 |
| R131 | 7030007210 | S.RES ERA3YEB 102V (1K) | T | 14.6/88.3 |
| R132 | 7030007210 | S.RES ERA3YEB 102V (1K) | T | 14.6/87 |
| R133 | 7030007210 | S.RES ERA3YEB 102V (1K) | T | 14.6/85.7 |
| R134 | 7030009861 | S.RES ERA3YED 471V (470) | T | 14.6/84.4 |
| R135 | 7030003860 | S.RES ERJ3GE JPW V | T | 30.4/75.8 |
| R136 | 7030003800 | S.RES ERJ3GEYJ 105 V (1M) | T | 33/77.1 |
| R137 | 7030003200 | S.RES ERJ3GEYJ 100 V (10) | T | 35.5/75.8 |
| R138 | 7030003860 | S.RES ERJ3GE JPW V | T | 16.8/78.6 |
| R139 | 7030003860 | S.RES ERJ3GE JPW V | T | 17.6/75.8 |
| R140 | 7030007230 | S.RES ERA3YED 102V (1K) | B | 31.2/92.1 |
| R141 | 7030003320 | S.RES ERJ3GEYJ 101 V (100) | B | 33.8/86.7 |
| R150 | 7030003330 | S.RES ERJ3GEYJ 121 V (120) | B | 37.8/86.2 |
| R151 | 7030003220 | S.RES ERJ3GEYJ 150 V (15) | B | 38.6/88.1 |
| R152 | 7030005871 | S.RES ERA3YKD 104V (100K) | B | 36.2/82.5 |
| R153 | 7030005321 | S.RES ERA3YED 103V (10K) | T | 19.2/62.7 |
| R154 | 7030003320 | S.RES ERJ3GEYJ 101 V (100) | B | 26.3/54.1 |
| R155 | 7030003350 | S.RES ERJ3GEYJ 181 V (180) | B | 23/54.1 |
| R156 | 7030005871 | S.RES ERA3YKD 104V (100K) | T | 24.6/53.1 |
| R157 | 7030005871 | S.RES ERA3YKD 104V (100K) | T | 26.9/58 |
| R158 | 7030003340 | S.RES ERJ3GEYJ 151 V (150) | T | 30/57.3 |
| R159 | 7030003320 | S.RES ERJ3GEYJ 101 V (100) | B | 33.6/61.4 |
| R160 | 7030003360 | S.RES ERJ3GEYJ 221 V (220) | B | 33.6/59.6 |
| R161 | 7030003640 | S.RES ERJ3GEYJ 473 V (47K) | B | 33.6/54.8 |
| R163 | 7030003220 | S.RES ERJ3GEYJ 150 V (15) | B | 30.2/56.6 |
| R164 | 7030003310 | S.RES ERJ3GEYJ 820 V (82) | B | 34.1/70.4 |
| R165 | 7030003320 | S.RES ERJ3GEYJ 101 V (100) | B | 30.8/70.4 |
| R166 | 7030003320 | S.RES ERJ3GEYJ 101 V (100) | B | 30.8/72.2 |
| R167 | 7030003240 | S.RES ERJ3GEYJ 220 V (22) | B | 37.4/75.8 |
| R168 | 7030003360 | S.RES ERJ3GEYJ 221 V (220) | B | 34.1/75.8 |
| R169 | 7030003640 | S.RES ERJ3GEYJ 473 V (47K) | B | 30.8/75.8 |
| R202 | 7030007230 | S.RES ERA3YED 102V (1K) | T | 22.2/39.7 |
| R203 | 7030007230 | S.RES ERA3YED 102V (1K) | T | 22.2/38.4 |
| R204 | 7030003360 | S.RES ERJ3GEYJ 221 V (220) | T | 22.2/37.1 |
| R205 | 7030005321 | S.RES ERA3YED 103V (10K) | T | 27.4/34 |
| R206 | 7030003220 | S.RES ERJ3GEYJ 150 V (15) | T | 31.1/45.7 |
| R210 | 7030005351 | S.RES ERA3YED 182V (1.8K) | T | 35.6/37.5 |
| R217 | 7030009651 | S.RES ERA3YHD 820V (82) | B | 40.4/42.8 |
| R219 | 7030009691 | S.RES ERA3YED 101V (100) | B | 40/35.7 |
| R220 | 7030005871 | S.RES ERA3YKD 104V (100K) | T | 73.2/37.6 |
| R221 | 7030005871 | S.RES ERA3YKD 104V (100K) | T | 72.3/30.9 |
| R222 | 7030003400 | S.RES ERJ3GEYJ 471 V (470) | T | 81.4/38.3 |
| R223 | 7030007230 | S.RES ERA3YED 102V (1K) | T | 81.9/31.9 |
| R224 | 7030003320 | S.RES ERJ3GEYJ 101 V (100) | T | 73.2/40.2 |
| R230 | 7030005871 | S.RES ERA3YKD 104V (100K) | T | 73.2/50.1 |
| R231 | 7030005871 | S.RES ERA3YKD 104V (100K) | T | 72.3/43.3 |
| R232 | 7030003360 | S.RES ERJ3GEYJ 221 V (220) | T | 81.4/50.8 |
| R233 | 7030007230 | S.RES ERA3YED 102V (1K) | T | 81.9/44.4 |
| R234 | 7030003320 | S.RES ERJ3GEYJ 101 V (100) | T | 73.2/52.7 |
| R240 | 7030005871 | S.RES ERA3YKD 104V (100K) | T | 73.2/62.6 |
| R241 | 7030005871 | S.RES ERA3YKD 104V (100K) | T | 72.3/55.8 |
| R242 | 7030003360 | S.RES ERJ3GEYJ 221 V (220) | T | 81.4/63.3 |
| R243 | 7030007230 | S.RES ERA3YED 102V (1K) | T | 81.9/56.9 |
| R244 | 7030003320 | S.RES ERJ3GEYJ 101 V (100) | T | 73.2/65.2 |
| R250 | 7030005871 | S.RES ERA3YKD 104V (100K) | T | 73.2/75.1 |
| R251 | 7030005871 | S.RES ERA3YKD 104V (100K) | T | 72.3/68.4 |
| R252 | 7030003360 | S.RES ERJ3GEYJ 221 V (220) | T | 81.4/75.8 |
| R253 | 7030007230 | S.RES ERA3YED 102V (1K) | T | 81.9/69.4 |
| R254 | 7030003320 | S.RES ERJ3GEYJ 101 V (100) | T | 73.2/77.7 |
| R260 | 7030005871 | S.RES ERA3YKD 104V (100K) | T | 73.2/87.6 |
| R261 | 7030005871 | S.RES ERA3YKD 104V (100K) | T | 72.3/80.9 |
| R262 | 7030003400 | S.RES ERJ3GEYJ 471 V (470) | T | 81.4/88.3 |
| R263 | 7030007230 | S.RES ERA3YED 102V (1K) | T | 81.9/81.9 |
| R264 | 7030003320 | S.RES ERJ3GEYJ 101 V (100) | T | 73.2/90.2 |
| R270 | 7030005871 | S.RES ERA3YKD 104V (100K) | T | 73.2/99.5 |
| R271 | 7030005871 | S.RES ERA3YKD 104V (100K) | T | 72.3/92.8 |
| R272 | 7030003360 | S.RES ERJ3GEYJ 221 V (220) | T | 81.4/100.8 |
| R273 | 7030007230 | S.RES ERA3YED 102V (1K) | T | 81.9/93.9 |
| R274 | 7030003320 | S.RES ERJ3GEYJ 101 V (100) | T | 73.2/102.1 |
| R301 | 7030003200 | S.RES ERJ3GEYJ 100 V (10) | T | 86.5/30.6 |
| R302 | 7030007230 | S.RES ERA3YED 102V (1K) | T | 86.5/29.3 |
| R303 | 7030003360 | S.RES ERJ3GEYJ 221 V (220) | T | 92.1/28 |
| R304 | 7030003490 | S.RES ERJ3GEYJ 272 V (2.7K) | T | 94/30.1 |

## [RXPLL-A UNIT]

| REF NO. | ORDER NO. | DESCRIPTION | M. | H/V LOCATION |
|---|---|---|---|---|
| R305 | 7030003510 | S.RES ERJ3GEYJ 392 V (3.9K) | T | 95.3/30.1 |
| R306 | 7030003360 | S.RES ERJ3GEYJ 221 V (220) | T | 94.7/32.2 |
| R307 | 7030009841 | S.RES ERA3YHD 330V (33) | T | 92.1/32.2 |
| R308 | 7030003370 | S.RES ERJ3GEYJ 271 V (270) [USA] | B | 92.6/43.4 |
| | 7030003370 | S.RES ERJ3GEYJ 271 V (270) [EUR] | | |
| | 7030003370 | S.RES ERJ3GEYJ 271 V (270) [FRA] | | |
| | 7030003370 | S.RES ERJ3GEYJ 271 V (270) [DEN] | | |
| | 7030003370 | S.RES ERJ3GEYJ 271 V (270) [ITR] | | |
| | 7030003370 | S.RES ERJ3GEYJ 271 V (270) [KOR] | | |
| | 7030003370 | S.RES ERJ3GEYJ 271 V (270) [ESP] | | |
| | 7030003370 | S.RES ERJ3GEYJ 271 V (270) [AUS] | | |
| | 7030003370 | S.RES ERJ3GEYJ 271 V (270) [UK] | | |
| | 7030003370 | S.RES ERJ3GEYJ 271 V (270) [RX] | | |
| | 7030009851 | S.RES ERA3YED 271V (270) [CHN] | | |
| R309 | 7030003540 | S.RES ERJ3GEYJ 682 V (6.8K) | B | 89.1/47 |
| R310 | 7030003500 | S.RES ERJ3GEYJ 332 V (3.3K) | B | 92.6/47 |
| R311 | 7030003350 | S.RES ERJ3GEYJ 181 V (180) | B | 89.1/45.2 |
| R312 | 7030003360 | S.RES ERJ3GEYJ 221 V (220) | B | 92.4/27.8 |
| R313 | 7030003490 | S.RES ERJ3GEYJ 272 V (2.7K) | B | 91.1/23.1 |
| R314 | 7030003510 | S.RES ERJ3GEYJ 392 V (3.9K) | B | 88.3/23.1 |
| R315 | 7030003360 | S.RES ERJ3GEYJ 221 V (220) | B | 87.5/25.1 |
| R316 | 7030003280 | S.RES ERJ3GEYJ 470 V (47) | B | 78.3/26.1 |
| R317 | 7030006220 | S.RES ERJ12YJ470U (47) | B | 90/31.4 |
| R318 | 7030009841 | S.RES ERA3YHD 330V (33) | B | 92.6/41.6 |
| R341 | 7030007230 | S.RES ERA3YED 102V (1K) | T | 92.1/40.1 |
| R342 | 7030005321 | S.RES ERA3YED 103V (10K) | T | 86.5/32.2 |
| R343 | 7030007230 | S.RES ERA3YED 102V (1K) | T | 89.3/34.8 |
| R351 | 7030003200 | S.RES ERJ3GEYJ 100 V (10) | B | 89.1/52.4 |
| R352 | 7030010980 | S.RES ERA3YHD 470V (47) | T | 89.3/55.8 |
| R353 | 7030009591 | S.RES ERA3YED 472V (4.7K) | T | 89.3/54.5 |
| R354 | 7030009591 | S.RES ERA3YED 472V (4.7K) | T | 89.3/50.4 |
| R355 | 7030009591 | S.RES ERA3YED 472V (4.7K) | T | 89.3/53.2 |
| R356 | 7030003320 | S.RES ERJ3GEYJ 101 V (100) | T | 89.3/57.1 |
| R357 | 7310005580 | S.TRI TMC3ADCS3X (4.7K) | T | 93.6/52.7 |
| R358 | 7030010980 | S.RES ERA3YHD 470V (47) | T | 94.9/56.4 |
| R359 | 7030003320 | S.RES ERJ3GEYJ 101 V (100) | T | 94.9/59 |
| R360 | 7030003320 | S.RES ERJ3GEYJ 101 V (100) | B | 92.6/63.9 |
| R361 | 7030003490 | S.RES ERJ3GEYJ 272 V (2.7K) | B | 89.2/62.1 |
| R362 | 7030003510 | S.RES ERJ3GEYJ 392 V (3.9K) | B | 92.6/60.3 |
| R363 | 7030003320 | S.RES ERJ3GEYJ 101 V (100) | B | 92.6/65.7 |
| R364 | 7030003410 | S.RES ERJ3GEYJ 561 V (560) | T | 94.9/82.9 |
| R365 | 7030007860 | S.RES ERJ3GEYJ 8R2V (8.2) | T | 92/83.4 |
| R366 | 7030003410 | S.RES ERJ3GEYJ 561 V (560) | T | 94.9/84.2 |
| R368 | 7030005321 | S.RES ERA3YED 103V (10K) | T | 86.1/59.6 |
| R369 | 7030008240 | S.RES ERJ12Y0R00U | B | 95.3/57.1 |
| R421 | 7030007230 | S.RES ERA3YED 102V (1K) | T | 92.1/87.8 |
| R422 | 7030007230 | S.RES ERA3YED 102V (1K) | T | 89.3/87.8 |
| R423 | 7030007230 | S.RES ERA3YED 102V (1K) | T | 92.1/89.1 |
| R424 | 7030007230 | S.RES ERA3YED 102V (1K) | T | 89.3/89.1 |
| R425 | 7030003410 | S.RES ERJ3GEYJ 561 V (560) | T | 90.1/81.6 |
| R426 | 7030003410 | S.RES ERJ3GEYJ 561 V (560) | T | 91.5/93.3 |
| R427 | 7030003320 | S.RES ERJ3GEYJ 101 V (100) | B | 86.8/87.3 |
| R428 | 7030009861 | S.RES ERA3YED 471V (470) | B | 92.1/88 |
| R429 | 7030009861 | S.RES ERA3YED 471V (470) | B | 89.3/88 |
| R441 | 7030003440 | S.RES ERJ3GEYJ 102 V (1K) [USA] | T | 92.1/75.5 |
| | 7030003440 | S.RES ERJ3GEYJ 102 V (1K) [EUR] | | |
| | 7030003440 | S.RES ERJ3GEYJ 102 V (1K) [FRA] | | |
| | 7030003440 | S.RES ERJ3GEYJ 102 V (1K) [DEN] | | |
| | 7030003440 | S.RES ERJ3GEYJ 102 V (1K) [ITR] | | |
| | 7030003440 | S.RES ERJ3GEYJ 102 V (1K) [KOR] | | |
| | 7030003440 | S.RES ERJ3GEYJ 102 V (1K) [ESP] | | |
| | 7030003440 | S.RES ERJ3GEYJ 102 V (1K) [AUS] | | |
| | 7030003440 | S.RES ERJ3GEYJ 102 V (1K) [UK] | | |
| | 7030003440 | S.RES ERJ3GEYJ 102 V (1K) [RX] | | |
| | 7030007230 | S.RES ERA3YED 102V (1K) [CHN] | | |
| R442 | 7030005321 | S.RES ERA3YED 103V (10K) | T | 88.9/70.9 |
| R443 | 7030003440 | S.RES ERJ3GEYJ 102 V (1K) [USA] | T | 88.9/72.2 |
| | 7030003440 | S.RES ERJ3GEYJ 102 V (1K) [EUR] | | |
| | 7030003440 | S.RES ERJ3GEYJ 102 V (1K) [FRA] | | |
| | 7030003440 | S.RES ERJ3GEYJ 102 V (1K) [DEN] | | |
| | 7030003440 | S.RES ERJ3GEYJ 102 V (1K) [ITR] | | |
| | 7030003440 | S.RES ERJ3GEYJ 102 V (1K) [KOR] | | |
| | 7030003440 | S.RES ERJ3GEYJ 102 V (1K) [ESP] | | |
| | 7030003440 | S.RES ERJ3GEYJ 102 V (1K) [AUS] | | |
| | 7030003440 | S.RES ERJ3GEYJ 102 V (1K) [UK] | | |
| | 7030003440 | S.RES ERJ3GEYJ 102 V (1K) [RX] | | |
| | 7030007230 | S.RES ERA3YED 102V (1K) [CHN] | | |
| R501 | 7030003360 | S.RES ERJ3GEYJ 221 V (220) | T | 29.2/153.1 |
| R502 | 7030007230 | S.RES ERA3YED 102V (1K) | T | 27.9/153.1 |
| R503 | 7030007230 | S.RES ERA3YED 102V (1K) | T | 26.5/153.1 |
| R504 | 7030007230 | S.RES ERA3YED 102V (1K) | T | 25.2/153.1 |
| R506 | 7030003800 | S.RES ERJ3GEYJ 105 V (1M) | T | 34/154.5 |
| R507 | 7030003860 | S.RES ERJ3GE JPW V | B | 50.8/127 |
| R509 | 7030007230 | S.RES ERA3YED 102V (1K) | T | 42.5/136 |
| R510 | 7030007220 | S.RES ERA3YED 202V (2K) | T | 14.6/153.6 |
| R511 | 7030007220 | S.RES ERA3YED 202V (2K) | T | 17.2/153.6 |
| R512 | 7030007220 | S.RES ERA3YED 202V (2K) | T | 17.2/152.3 |
| R513 | 7030007220 | S.RES ERA3YED 202V (2K) | T | 17.2/151 |
| R514 | 7030007220 | S.RES ERA3YED 202V (2K) | T | 17.2/149.7 |
| R515 | 7030007220 | S.RES ERA3YED 202V (2K) | T | 17.2/148.3 |
| R516 | 7030007220 | S.RES ERA3YED 202V (2K) | T | 17.2/147 |
| R517 | 7030007220 | S.RES ERA3YED 202V (2K) | T | 17.2/145.7 |
| R518 | 7030007200 | S.RES ERA3YEB 202V (2K) | T | 17.2/144.4 |
| R519 | 7030007200 | S.RES ERA3YEB 202V (2K) | T | 17.2/142.7 |
| R520 | 7030007200 | S.RES ERA3YEB 202V (2K) | T | 17.2/141.4 |
| R521 | 7030007200 | S.RES ERA3YEB 202V (2K) | T | 17.2/140.1 |
| R522 | 7030007200 | S.RES ERA3YEB 202V (2K) | T | 17.2/138.8 |
| R523 | 7030007230 | S.RES ERA3YED 102V (1K) | T | 14.6/152.3 |
| R524 | 7030007230 | S.RES ERA3YED 102V (1K) | T | 14.6/151 |
| R525 | 7030007230 | S.RES ERA3YED 102V (1K) | T | 14.6/149.7 |
| R526 | 7030007230 | S.RES ERA3YED 102V (1K) | T | 14.6/148.3 |
| R527 | 7030007230 | S.RES ERA3YED 102V (1K) | T | 14.6/147 |
| R528 | 7030007230 | S.RES ERA3YED 102V (1K) | T | 14.6/145.7 |
| R529 | 7030007210 | S.RES ERA3YEB 102V (1K) | T | 14.6/144.4 |

M.=Mounted side (T: Mounted on the Top side, B: Mounted on the Bottom side)
S.=Surface mount

## [RXPLL-A UNIT]

| REF NO. | ORDER NO. | DESCRIPTION | | M. | H/V LOCATION |
|---|---|---|---|---|---|
| R530 | 7030007210 | S.RES ERA3YEB 102V (1K) | | T | 14.6/142.7 |
| R531 | 7030007210 | S.RES ERA3YEB 102V (1K) | | T | 14.6/141.4 |
| R532 | 7030007210 | S.RES ERA3YEB 102V (1K) | | T | 14.6/140.1 |
| R533 | 7030007210 | S.RES ERA3YEB 102V (1K) | | T | 14.6/138.8 |
| R534 | 7030003860 | S.RES ERJ3GE JPW V | | T | 22.2/127.6 |
| R535 | 7030003800 | S.RES ERJ3GEYJ 105 V (1M) | | T | 24.8/129.8 |
| R536 | 7030003200 | S.RES ERJ3GEYJ 100 V (10) | | T | 28/128.3 |
| R537 | 7030007230 | S.RES ERA3YED 102V (1K) | | T | 30.3/131.9 |
| R538 | 7030003360 | S.RES ERJ3GEYJ 221 V (220) | | B | 34.8/146.5 |
| R540 | 7030007230 | S.RES ERA3YED 102V (1K) | | B | 52.3/142.8 |
| R544 | 7030005871 | S.RES ERA3YKD 104V (100K) | | T | 69.4/140.4 |
| R545 | 7030005871 | S.RES ERA3YKD 104V (100K) | | T | 69.4/139.1 |
| R546 | 7030009861 | S.RES ERA3YED 471V (470) | | T | 67.4/150.7 |
| R548 | 7030009591 | S.RES ERA3YED 472V (4.7K) | | B | 43.4/136.5 |
| R550 | 7030009691 | S.RES ERA3YED 101V (100) | | B | 43.4/134.7 |
| R554 | 7030009891 | S.RES ERA3YED 151V (150) | | B | 47.2/133.9 |
| R555 | 7030003380 | S.RES ERJ3GEYJ 331 V (330) | | B | 61.9/142.1 |
| R556 | 7030005981 | S.RES ERA3YED 333V (33K) | | B | 44.2/128.2 |
| R561 | 7030003200 | S.RES ERJ3GEYJ 100 V (10) | | T | 71.3/148.5 |
| R562 | 7030003360 | S.RES ERJ3GEYJ 221 V (220) | | T | 65.7/155.5 |
| R563 | 7030003490 | S.RES ERJ3GEYJ 272 V (2.7K) | | T | 70.4/151.9 |
| R564 | 7030003510 | S.RES ERJ3GEYJ 392 V (3.9K) | | T | 70.4/150.6 |
| R565 | 7030003360 | S.RES ERJ3GEYJ 221 V (220) | | T | 67/155.5 |
| R570 | 7030003230 | S.RES ERJ3GEYJ 180 V (18) | | T | 63.1/155.5 |
| R571 | 7030003230 | S.RES ERJ3GEYJ 180 V (18) | | T | 58.5/155 |
| R572 | 7030003290 | S.RES ERJ3GEYJ 560 V (56) | | B | 57.2/156.3 |
| R573 | 7030009841 | S.RES ERA3YHD 330V (33) | | T | 61.8/155.5 |
| R574 | 7030003300 | S.RES ERJ3GEYJ 680 V (68) | | T | 60.5/155.5 |
| R575 | 7030003220 | S.RES ERJ3GEYJ 150 V (15) | | T | 58.5/156.3 |
| R580 | 7030009861 | S.RES ERA3YED 471V (470) | | T | 41.9/153.7 |
| R581 | 7030003360 | S.RES ERJ3GEYJ 221 V (220) | | T | 41.9/145.5 |
| R582 | 7030003600 | S.RES ERJ3GEYJ 223 V (22K) | | T | 41.9/149.5 |
| R587 | 7030003370 | S.RES ERJ3GEYJ 271 V (270) | [USA] | T | 55.7/157.6 |
| | 7030003370 | S.RES ERJ3GEYJ 271 V (270) | [EUR] | | |
| | 7030003370 | S.RES ERJ3GEYJ 271 V (270) | [FRA] | | |
| | 7030003370 | S.RES ERJ3GEYJ 271 V (270) | [DEN] | | |
| | 7030003370 | S.RES ERJ3GEYJ 271 V (270) | [ITR] | | |
| | 7030003370 | S.RES ERJ3GEYJ 271 V (270) | [KOR] | | |
| | 7030003370 | S.RES ERJ3GEYJ 271 V (270) | [ESP] | | |
| | 7030003370 | S.RES ERJ3GEYJ 271 V (270) | [AUS] | | |
| | 7030003370 | S.RES ERJ3GEYJ 271 V (270) | [UK] | | |
| | 7030003370 | S.RES ERJ3GEYJ 271 V (270) | [RX] | | |
| | 7030009851 | S.RES ERA3YED 271V (270) | [CHN] | | |
| R588 | 7030003230 | S.RES ERJ3GEYJ 180 V (18) | | T | 58.5/158.9 |
| R589 | 7030003370 | S.RES ERJ3GEYJ 271 V (270) | [USA] | T | 55.7/158.9 |
| | 7030003370 | S.RES ERJ3GEYJ 271 V (270) | [EUR] | | |
| | 7030003370 | S.RES ERJ3GEYJ 271 V (270) | [FRA] | | |
| | 7030003370 | S.RES ERJ3GEYJ 271 V (270) | [DEN] | | |
| | 7030003370 | S.RES ERJ3GEYJ 271 V (270) | [ITR] | | |
| | 7030003370 | S.RES ERJ3GEYJ 271 V (270) | [KOR] | | |
| | 7030003370 | S.RES ERJ3GEYJ 271 V (270) | [ESP] | | |
| | 7030003370 | S.RES ERJ3GEYJ 271 V (270) | [AUS] | | |
| | 7030003370 | S.RES ERJ3GEYJ 271 V (270) | [UK] | | |
| | 7030003370 | S.RES ERJ3GEYJ 271 V (270) | [RX] | | |
| | 7030009851 | S.RES ERA3YED 271V (270) | [CHN] | | |
| R591 | 7030003320 | S.RES ERJ3GEYJ 101 V (100) | | T | 58.2/169.9 |
| R592 | 7030005321 | S.RES ERA3YED 103V (10K) | | T | 58.5/167.9 |
| R593 | 7030003480 | S.RES ERJ3GEYJ 222 V (2.2K) | | T | 58.5/165.1 |
| R594 | 7030003320 | S.RES ERJ3GEYJ 101 V (100) | | B | 61.9/168.1 |
| R595 | 7030003640 | S.RES ERJ3GEYJ 473 V (47K) | | B | 55.9/165.3 |
| R596 | 7030003540 | S.RES ERJ3GEYJ 682 V (6.8K) | | B | 54.7/168.9 |
| R603 | 7030003480 | S.RES ERJ3GEYJ 222 V (2.2K) | | T | 56.3/110.9 |
| R604 | 7030007230 | S.RES ERA3YED 102V (1K) | | B | 53.4/115.8 |
| R605 | 7030003320 | S.RES ERJ3GEYJ 101 V (100) | | T | 46.8/113.4 |
| R651 | 7030007230 | S.RES ERA3YED 102V (1K) | | B | 23.5/177.1 |
| R652 | 7030003360 | S.RES ERJ3GEYJ 221 V (220) | | T | 13.5/170.8 |
| R653 | 7030007230 | S.RES ERA3YED 102V (1K) | | T | 13.5/169.5 |
| R654 | 7030007230 | S.RES ERA3YED 102V (1K) | | T | 13.5/168.2 |
| R656 | 7030003800 | S.RES ERJ3GEYJ 105 V (1M) | | T | 15/161.4 |
| R657 | 7030003320 | S.RES ERJ3GEYJ 101 V (100) | | T | 20.2/161.4 |
| R661 | 7030007220 | S.RES ERA3YED 202V (2K) | | T | 31.7/162.8 |
| R662 | 7030007220 | S.RES ERA3YED 202V (2K) | | T | 31.7/164.1 |
| R663 | 7030007220 | S.RES ERA3YED 202V (2K) | | T | 31.7/165.4 |
| R664 | 7030007220 | S.RES ERA3YED 202V (2K) | | T | 31.7/166.7 |
| R665 | 7030007220 | S.RES ERA3YED 202V (2K) | | T | 31.7/168 |
| R666 | 7030007220 | S.RES ERA3YED 202V (2K) | | T | 31.7/170.6 |
| R667 | 7030007220 | S.RES ERA3YED 202V (2K) | | T | 31.7/171.9 |
| R668 | 7030007220 | S.RES ERA3YED 202V (2K) | | T | 31.7/173.2 |
| R669 | 7030007200 | S.RES ERA3YEB 202V (2K) | | T | 31.7/174.5 |
| R670 | 7030007200 | S.RES ERA3YEB 202V (2K) | | T | 31.7/175.8 |
| R671 | 7030007200 | S.RES ERA3YEB 202V (2K) | | T | 31.7/177.1 |
| R673 | 7030007230 | S.RES ERA3YED 102V (1K) | | T | 34.3/165.4 |
| R674 | 7030007230 | S.RES ERA3YED 102V (1K) | | T | 34.3/166.7 |
| R675 | 7030007230 | S.RES ERA3YED 102V (1K) | | T | 34.3/168 |
| R676 | 7030007230 | S.RES ERA3YED 102V (1K) | | T | 34.3/169.3 |
| R677 | 7030007230 | S.RES ERA3YED 102V (1K) | | T | 34.3/170.6 |
| R678 | 7030007230 | S.RES ERA3YED 102V (1K) | | T | 34.3/171.9 |
| R679 | 7030007210 | S.RES ERA3YEB 102V (1K) | | T | 34.3/173.2 |
| R680 | 7030007210 | S.RES ERA3YEB 102V (1K) | | T | 34.3/174.5 |
| R681 | 7030007210 | S.RES ERA3YEB 102V (1K) | | T | 34.3/175.8 |
| R682 | 7030003860 | S.RES ERJ3GE JPW V | | B | 58.4/166 |
| R685 | 7030003460 | S.RES ERJ3GEYJ 152 V (1.5K) | | T | 38.4/169.7 |
| R686 | 7030003320 | S.RES ERJ3GEYJ 101 V (100) | | T | 40.3/163.4 |
| R687 | 7030003470 | S.RES ERJ3GEYJ 182 V (1.8K) | | T | 37.4/165.1 |
| R688 | 7030003480 | S.RES ERJ3GEYJ 222 V (2.2K) | | T | 34.3/162.8 |
| R689 | 7030003360 | S.RES ERJ3GEYJ 221 V (220) | | T | 33.6/161.5 |

## [RXPLL-A UNIT]

| REF NO. | ORDER NO. | DESCRIPTION | | M. | H/V LOCATION |
|---|---|---|---|---|---|
| R690 | 7030003370 | S.RES ERJ3GEYJ 271 V (270) | [USA] | T | 46.4/165.3 |
| | 7030003370 | S.RES ERJ3GEYJ 271 V (270) | [EUR] | | |
| | 7030003370 | S.RES ERJ3GEYJ 271 V (270) | [FRA] | | |
| | 7030003370 | S.RES ERJ3GEYJ 271 V (270) | [DEN] | | |
| | 7030003370 | S.RES ERJ3GEYJ 271 V (270) | [ITR] | | |
| | 7030003370 | S.RES ERJ3GEYJ 271 V (270) | [KOR] | | |
| | 7030003370 | S.RES ERJ3GEYJ 271 V (270) | [ESP] | | |
| | 7030003370 | S.RES ERJ3GEYJ 271 V (270) | [AUS] | | |
| | 7030003370 | S.RES ERJ3GEYJ 271 V (270) | [UK] | | |
| | 7030003370 | S.RES ERJ3GEYJ 271 V (270) | [RX] | | |
| | 7030009851 | S.RES ERA3YED 271V (270) | [CHN] | | |
| R691 | 7030003230 | S.RES ERJ3GEYJ 180 V (18) | | T | 48.4/164.8 |
| R692 | 7030003370 | S.RES ERJ3GEYJ 271 V (270) | [USA] | T | 46.4/166.6 |
| | 7030003370 | S.RES ERJ3GEYJ 271 V (270) | [EUR] | | |
| | 7030003370 | S.RES ERJ3GEYJ 271 V (270) | [FRA] | | |
| | 7030003370 | S.RES ERJ3GEYJ 271 V (270) | [DEN] | | |
| | 7030003370 | S.RES ERJ3GEYJ 271 V (270) | [ITR] | | |
| | 7030003370 | S.RES ERJ3GEYJ 271 V (270) | [KOR] | | |
| | 7030003370 | S.RES ERJ3GEYJ 271 V (270) | [ESP] | | |
| | 7030003370 | S.RES ERJ3GEYJ 271 V (270) | [AUS] | | |
| | 7030003370 | S.RES ERJ3GEYJ 271 V (270) | [UK] | | |
| | 7030003370 | S.RES ERJ3GEYJ 271 V (270) | [RX] | | |
| | 7030009851 | S.RES ERA3YED 271V (270) | [CHN] | | |
| R693 | 7030003500 | S.RES ERJ3GEYJ 332 V (3.3K) | | T | 37.1/169.7 |
| R704 | 7030009841 | S.RES ERA3YHD 330V (33) | | T | 30.8/113.7 |
| R705 | 7030003600 | S.RES ERJ3GEYJ 223 V (22K) | | T | 29.5/113.7 |
| R706 | 7030005321 | S.RES ERA3YED 103V (10K) | | T | 28.2/113.7 |
| R707 | 7030009861 | S.RES ERA3YED 471V (470) | | T | 30.8/108.1 |
| R708 | 7030003410 | S.RES ERJ3GEYJ 561 V (560) | | T | 43.3/118.8 |
| R709 | 7030007860 | S.RES ERJ3GEYJ 8R2V (8.2) | | T | 43.3/116 |
| R710 | 7030003410 | S.RES ERJ3GEYJ 561 V (560) | | T | 43.8/121.1 |
| R711 | 7030003320 | S.RES ERJ3GEYJ 101 V (100) | | T | 37.9/154.5 |
| R802 | 7030009861 | S.RES ERA3YED 471V (470) | | T | 78.3/147.3 |
| R803 | 7030005321 | S.RES ERA3YED 103V (10K) | | T | 79.6/147.3 |
| R804 | 7030003320 | S.RES ERJ3GEYJ 101 V (100) | | T | 80.4/149.5 |
| R805 | 7030003370 | S.RES ERJ3GEYJ 271 V (270) | [USA] | T | 81.5/158.7 |
| | 7030003370 | S.RES ERJ3GEYJ 271 V (270) | [EUR] | | |
| | 7030003370 | S.RES ERJ3GEYJ 271 V (270) | [FRA] | | |
| | 7030003370 | S.RES ERJ3GEYJ 271 V (270) | [DEN] | | |
| | 7030003370 | S.RES ERJ3GEYJ 271 V (270) | [ITR] | | |
| | 7030003370 | S.RES ERJ3GEYJ 271 V (270) | [KOR] | | |
| | 7030003370 | S.RES ERJ3GEYJ 271 V (270) | [ESP] | | |
| | 7030003370 | S.RES ERJ3GEYJ 271 V (270) | [AUS] | | |
| | 7030003370 | S.RES ERJ3GEYJ 271 V (270) | [UK] | | |
| | 7030003370 | S.RES ERJ3GEYJ 271 V (270) | [RX] | | |
| | 7030009851 | S.RES ERA3YED 271V (270) | [CHN] | | |
| R806 | 7030003230 | S.RES ERJ3GEYJ 180 V (18) | | T | 84.3/158.7 |
| R807 | 7030003370 | S.RES ERJ3GEYJ 271 V (270) | [USA] | T | 87.1/158.7 |
| | 7030003370 | S.RES ERJ3GEYJ 271 V (270) | [EUR] | | |
| | 7030003370 | S.RES ERJ3GEYJ 271 V (270) | [FRA] | | |
| | 7030003370 | S.RES ERJ3GEYJ 271 V (270) | [DEN] | | |
| | 7030003370 | S.RES ERJ3GEYJ 271 V (270) | [ITR] | | |
| | 7030003370 | S.RES ERJ3GEYJ 271 V (270) | [KOR] | | |
| | 7030003370 | S.RES ERJ3GEYJ 271 V (270) | [ESP] | | |
| | 7030003370 | S.RES ERJ3GEYJ 271 V (270) | [AUS] | | |
| | 7030003370 | S.RES ERJ3GEYJ 271 V (270) | [UK] | | |
| | 7030003370 | S.RES ERJ3GEYJ 271 V (270) | [RX] | | |
| | 7030009851 | S.RES ERA3YED 271V (270) | [CHN] | | |
| R812 | 7030007230 | S.RES ERA3YED 102V (1K) | | T | 73.9/177.6 |
| R814 | 7030005321 | S.RES ERA3YED 103V (10K) | | T | 75.2/177.6 |
| R815 | 7030003320 | S.RES ERJ3GEYJ 101 V (100) | | T | 79.6/173.6 |
| R831 | 7030003320 | S.RES ERJ3GEYJ 101 V (100) | | B | 85.6/180 |
| R832 | 7030003300 | S.RES ERJ3GEYJ 680 V (68) | | B | 88.5/177.2 |
| R833 | 7030003320 | S.RES ERJ3GEYJ 101 V (100) | | B | 89.3/174.6 |
| R834 | 7030003380 | S.RES ERJ3GEYJ 331 V (330) | | T | 91.6/155.7 |
| R835 | 7030003320 | S.RES ERJ3GEYJ 101 V (100) | | T | 94.4/155.7 |
| R836 | 7030003380 | S.RES ERJ3GEYJ 331 V (330) | | T | 88.8/145.4 |
| R837 | 7030003220 | S.RES ERJ3GEYJ 150 V (15) | | T | 91.6/145.4 |
| R838 | 7030003380 | S.RES ERJ3GEYJ 331 V (330) | | T | 94.4/145.4 |
| R839 | 7030005321 | S.RES ERA3YED 103V (10K) | | B | 77.9/171 |
| R840 | 7030003540 | S.RES ERJ3GEYJ 682 V (6.8K) | | B | 74.5/165.7 |
| R1000 | 7030003320 | S.RES ERJ3GEYJ 101 V (100) | | B | 177.1/11.2 |
| R1001 | 7030003640 | S.RES ERJ3GEYJ 473 V (47K) | | T | 182.8/63.5 |
| R1002 | 7030003480 | S.RES ERJ3GEYJ 222 V (2.2K) | | T | 183.5/65.7 |
| R1003 | 7030010980 | S.RES ERA3YHD 470V (47) | | T | 162/13.4 |
| R1004 | 7030007230 | S.RES ERA3YED 102V (1K) | | B | 166.4/12.9 |
| R1005 | 7030003550 | S.RES ERJ3GEYJ 822 V (8.2K) | | T | 144/26.1 |
| R1006 | 7030007230 | S.RES ERA3YED 102V (1K) | | T | 145.3/26.1 |
| R1007 | 7030004030 | S.RES ERJ3GEYJ 5R6 V (5.6) | | B | 153.7/33.6 |
| R1008 | 7030003240 | S.RES ERJ3GEYJ 220 V (22) | | T | 144/36.4 |
| R1009 | 7030010980 | S.RES ERA3YHD 470V (47) | | T | 182.4/29.3 |
| R1010 | 7030010980 | S.RES ERA3YHD 470V (47) | | T | 154.5/33.2 |
| R1013 | 7030007230 | S.RES ERA3YED 102V (1K) | | B | 172.7/40.8 |
| R1014 | 7030007230 | S.RES ERA3YED 102V (1K) | | B | 156.7/40.8 |
| R1015 | 7030003530 | S.RES ERJ3GEYJ 562 V (5.6K) | | B | 172.7/45.4 |
| R1016 | 7030003530 | S.RES ERJ3GEYJ 562 V (5.6K) | | B | 156.7/45.4 |
| R1017 | 7030003530 | S.RES ERJ3GEYJ 562 V (5.6K) | | B | 169.7/12.9 |
| R1018 | 7030003650 | S.RES ERJ3GEYJ 563 V (56K) | | B | 181.1/62.4 |
| R1019 | 7030005321 | S.RES ERA3YED 103V (10K) | | B | 181.9/65 |
| R1020 | 7030003390 | S.RES ERJ3GEYJ 391 V (390) | | T | 179.6/18.3 |
| R1021 | 7030003220 | S.RES ERJ3GEYJ 150 V (15) | | T | 177/19.4 |
| R1022 | 7030003390 | S.RES ERJ3GEYJ 391 V (390) | | T | 180.9/19.4 |
| R1023 | 7030010980 | S.RES ERA3YHD 470V (47) | | B | 149.3/33.5 |
| R1024 | 7030003200 | S.RES ERJ3GEYJ 100 V (10) | | B | 150.1/31.4 |
| R1025 | 7030003300 | S.RES ERJ3GEYJ 680 V (68) | | T | 178.3/19.4 |
| R1026 | 7030003480 | S.RES ERJ3GEYJ 222 V (2.2K) | | B | 171.2/14.2 |
| R1027 | 7030003200 | S.RES ERJ3GEYJ 100 V (10) | | B | 176.5/38.3 |
| R1028 | 7030003200 | S.RES ERJ3GEYJ 100 V (10) | | B | 160.5/38.3 |
| R1029 | 7030010980 | S.RES ERA3YHD 470V (47) | | B | 178.2/46.1 |
| R1030 | 7030010980 | S.RES ERA3YHD 470V (47) | | B | 162.2/46.1 |
| R1051 | 7030003800 | S.RES ERJ3GEYJ 105 V (1M) | | T | 178.6/93.1 |
| R1054 | 7030011500 | S.RES ERA3YHD 270V (27) | | T | 149.1/83.2 |
| R1055 | 7030000010 | S.RES MCR10EZHJ JPW (000) | | T | 162.1/76.6 |
| R1056 | 7030000010 | S.RES MCR10EZHJ JPW (000) | | T | 177.5/71.1 |

M.=Mounted side (T: Mounted on the Top side, B: Mounted on the Bottom side)
S.=Surface mount

## [RXPLL-A UNIT]

| REF NO. | ORDER NO. | DESCRIPTION | M. | H/V LOCATION |
|---|---|---|---|---|
| R1071 | 7030010980 | S.RES ERA3YHD 470V (47) | B | 165.9/76.4 |
| R1072 | 7030000010 | S.RES MCR10EZHJ JPW (000) | T | 133.9/84.1 |
| R1073 | 7030000010 | S.RES MCR10EZHJ JPW (000) | T | 135.5/85.7 |
| R1101 | 7310004860 | S.TRI EVM-3YSX50 B53 (502) | T | 180.1/90.2 |
| R1102 | 7030005871 | S.RES ERA3YKD 104V (100K) | B | 180.2/100.6 |
| R1103 | 7030007680 | S.RES ERJ8ENF 47R0V (47) | T | 181.7/104.7 |
| R1104 | 7030007680 | S.RES ERJ8ENF 47R0V (47) | T | 173.6/107.2 |
| R1105 | 7030003500 | S.RES ERJ3GEYJ 332 V (3.3K) | T | 176.7/87.7 |
| R1106 | 7030009620 | S.RES ERJ12YJ120U (12) | B | 179.6/117.9 |
| R1107 | 7030010980 | S.RES ERA3YHD 470V (47) | T | 175.6/120.3 |
| R1109 | 7030007180 | S.RES ERJ12YJ150U (15) | B | 176.5/125.7 |
| R1110 | 7030003480 | S.RES ERJ3GEYJ 222 V (2.2K) | B | 168.5/131.6 |
| R1111 | 7030003480 | S.RES ERJ3GEYJ 222 V (2.2K) | T | 166.2/130.4 |
| R1113 | 7030003480 | S.RES ERJ3GEYJ 222 V (2.2K) | T | 166.2/131.7 |
| R1114 | 7030004040 | S.RES ERJ3GEYJ 4R7 V (4.7) | T | 179.2/125.3 |
| R1115 | 7030006240 | S.RES ERJ12YJ181U (180) | B | 176.5/129.9 |
| R1116 | 7030007230 | S.RES ERA3YED 102V (1K) | T | 175.7/135.3 |
| R1117 | 7030004040 | S.RES ERJ3GEYJ 4R7 V (4.7) | T | 175.7/134 |
| R1118 | 7030003480 | S.RES ERJ3GEYJ 222 V (2.2K) | T | 175.4/132 |
| R1119 | 7030003470 | S.RES ERJ3GEYJ 182 V (1.8K) | T | 178/132 |
| R1120 | 7030006070 | S.RES ERJ12YJ101U (100) | B | 177.3/141 |
| R1121 | 7030003240 | S.RES ERJ3GEYJ 220 V (22) | T | 178.6/139.6 |
| R1122 | 7030010980 | S.RES ERA3YHD 470V (47) | T | 171.9/131.1 |
| R1123 | 7030003480 | S.RES ERJ3GEYJ 222 V (2.2K) | T | 165.7/137.4 |
| R1124 | 7030003460 | S.RES ERJ3GEYJ 152 V (1.5K) | T | 165.7/140 |
| R1125 | 7030003420 | S.RES ERJ3GEYJ 681 V (680) | B | 171/142.2 |
| R1126 | 7030003200 | S.RES ERJ3GEYJ 100 V (10) | T | 168.4/142.2 |
| R1127 | 7030010980 | S.RES ERA3YHD 470V (47) | T | 174.6/142.9 |
| R1128 | 7030003470 | S.RES ERJ3GEYJ 182 V (1.8K) | T | 174.6/146.6 |
| R1129 | 7030003470 | S.RES ERJ3GEYJ 182 V (1.8K) | T | 174.6/148.4 |
| R1130 | 7030003480 | S.RES ERJ3GEYJ 222 V (2.2K) | T | 180.6/146.4 |
| R1131 | 7030003640 | S.RES ERJ3GEYJ 473 V (47K) | B | 177.4/90.7 |
| R1132 | 7310004860 | S.TRI EVM-3YSX50 B53 (502) | T | 179.4/84.3 |
| R1133 | 7030003500 | S.RES ERJ3GEYJ 332 V (3.3K) | T | 175.5/82.5 |
| R1134 | 7030003640 | S.RES ERJ3GEYJ 473 V (47K) | T | 175.5/83.8 |
| R1135 | 7030005871 | S.RES ERA3YKD 104V (100K) | T | 182.2/97.8 |
| R1151 | 7030003280 | S.RES ERJ3GEYJ 470 V (47) | T | 134.8/63.9 |
| R1152 | 7030003280 | S.RES ERJ3GEYJ 470 V (47) | B | 117.2/56.3 |
| R1203 | 7030000010 | S.RES MCR10EZHJ JPW (000) | T | 157.5/74.9 |
| R1208 | 7030003480 | S.RES ERJ3GEYJ 222 V (2.2K) | T | 138.3/53.9 |
| R1209 | 7030005321 | S.RES ERA3YED 103V (10K) | T | 139.1/51.9 |
| R1210 | 7030003650 | S.RES ERJ3GEYJ 563 V (56K) | B | 142.5/44.3 |
| R1211 | 7030003860 | S.RES ERJ3GE JPW V | T | 117.6/7.8 |
| R1212 | 7030003860 | S.RES ERJ3GE JPW V | T | 124.8/51.1 |
| R1213 | 7030003200 | S.RES ERJ3GEYJ 100 V (10) | B | 118.8/25 |
| R1214 | 7030003200 | S.RES ERJ3GEYJ 100 V (10) | B | 109/25 |
| R1216 | 7030010980 | S.RES ERA3YHD 470V (47) | B | 120.7/31.6 |
| R1217 | 7030010980 | S.RES ERA3YHD 470V (47) | B | 111.2/31.6 |
| R1220 | 7030010980 | S.RES ERA3YHD 470V (47) | T | 118.7/17.3 |
| R1221 | 7030007230 | S.RES ERA3YED 102V (1K) | T | 116.4/39.9 |
| R1222 | 7030003530 | S.RES ERJ3GEYJ 562 V (5.6K) | T | 116.4/38.6 |
| R1223 | 7030010980 | S.RES ERA3YHD 470V (47) | T | 109.3/17.1 |
| R1224 | 7030007230 | S.RES ERA3YED 102V (1K) | T | 106.6/39.9 |
| R1225 | 7030003530 | S.RES ERJ3GEYJ 562 V (5.6K) | T | 106.6/38.6 |
| R1226 | 7030003410 | S.RES ERJ3GEYJ 561 V (560) | T | 158.9/92.9 |
| R1227 | 7030003410 | S.RES ERJ3GEYJ 561 V (560) | T | 154/92.9 |
| R1228 | 7310004860 | S.TRI EVM-3YSX50 B53 (502) | T | 156.4/92.9 |
| R1229 | 7030003480 | S.RES ERJ3GEYJ 222 V (2.2K) | B | 156.1/117.4 |
| R1230 | 7030003480 | S.RES ERJ3GEYJ 222 V (2.2K) | B | 156.1/119.2 |
| R1231 | 7030003480 | S.RES ERJ3GEYJ 222 V (2.2K) | B | 156.1/121 |
| R1232 | 7030003600 | S.RES ERJ3GEYJ 223 V (22K) | T | 156.3/97.5 |
| R1233 | 7030010980 | S.RES ERA3YHD 470V (47) | B | 152.5/109.4 |
| R1301 | 7030010980 | S.RES ERA3YHD 470V (47) | B | 155.7/97.5 |
| R1302 | 7030003860 | S.RES ERJ3GE JPW V | T | 159.3/116.8 |
| R1304 | 7030003620 | S.RES ERJ3GEYJ 333 V (33K) | T | 156.5/123.2 |
| R1306 | 7030006230 | S.RES ERJ12YJ151U (150) | B | 153.8/124.8 |
| R1307 | 7030003300 | S.RES ERJ3GEYJ 680 V (68) | T | 156.5/128.4 |
| R1311 | 7030000010 | S.RES MCR10EZHJ JPW (000) | T | 140.3/98.8 |
| R1312 | 7030000010 | S.RES MCR10EZHJ JPW (000) | T | 143.2/104.1 |
| R1313 | 7030000010 | S.RES MCR10EZHJ JPW (000) | T | 143.2/101.5 |
| R1357 | 7030007230 | S.RES ERA3YED 102V (1K) | B | 140.7/70.4 |
| R1358 | 7030003530 | S.RES ERJ3GEYJ 562 V (5.6K) | B | 142.8/70.4 |
| R1359 | 7030010980 | S.RES ERA3YHD 470V (47) | T | 139.4/64.7 |
| R1360 | 7030007230 | S.RES ERA3YED 102V (1K) | B | 146.4/67.1 |
| R1361 | 7030003380 | S.RES ERJ3GEYJ 331 V (330) | T | 139.3/68.8 |
| R1362 | 7030005871 | S.RES ERA3YKD 104V (100K) | B | 144.6/70.4 |
| R1401 | 7030003200 | S.RES ERJ3GEYJ 100 V (10) | T | 131.5/103.3 |
| R1402 | 7030003300 | S.RES ERJ3GEYJ 680 V (68) | T | 126.4/111 |
| R1403 | 7030007230 | S.RES ERA3YED 102V (1K) | T | 132/107.7 |
| R1404 | 7030009861 | S.RES ERA3YED 471V (470) | T | 134.6/104.3 |
| R1405 | 7030003340 | S.RES ERJ3GEYJ 151 V (150) | T | 137.2/104.3 |
| R1406 | 7030009591 | S.RES ERA3YED 472V (4.7K) | T | 135.2/106.2 |
| R1407 | 7030003550 | S.RES ERJ3GEYJ 822 V (8.2K) | B | 135.4/104.3 |
| R1408 | 7030003200 | S.RES ERJ3GEYJ 100 V (10) | T | 120.9/109 |
| R1409 | 7030009591 | S.RES ERA3YED 472V (4.7K) | T | 120.5/114.9 |
| R1410 | 7030006091 | S.RES ERA3YED 822V (8.2K) | B | 124.2/114.4 |
| R1411 | 7030005871 | S.RES ERA3YKD 104V (100K) | T | 123.2/116.2 |
| R1412 | 7030003200 | S.RES ERJ3GEYJ 100 V (10) | T | 126.4/112.3 |
| R1413 | 7030003200 | S.RES ERJ3GEYJ 100 V (10) | T | 126.4/113.6 |
| R1414 | 7030005871 | S.RES ERA3YKD 104V (100K) | B | 120.9/114.4 |
| R1415 | 7030010980 | S.RES ERA3YHD 470V (47) | T | 127/114.9 |
| R1416 | 7030003320 | S.RES ERJ3GEYJ 101 V (100) | B | 139.7/122.9 |
| R1417 | 7030000010 | S.RES MCR10EZHJ JPW (000) | B | 130.1/124.5 |
| R1418 | 7030000010 | S.RES MCR10EZHJ JPW (000) | B | 130.1/122.5 |
| R1419 | 7030003860 | S.RES ERJ3GE JPW V | B | 129.4/114.9 |
| R1501 | 7030010980 | S.RES ERA3YHD 470V (47) | T | 126.5/125.2 |
| R1502 | 7030009841 | S.RES ERA3YHD 330V (33) | T | 133/131 |
| R1503 | 7030009851 | S.RES ERA3YED 271V (270) | T | 130/146.3 |
| R1504 | 7030011050 | S.RES ERA3YHD 100V (10) | T | 131.3/143.5 |
| R1505 | 7030006091 | S.RES ERA3YED 822V (8.2K) | B | 137.7/140.3 |
| R1506 | 7030007230 | S.RES ERA3YED 102V (1K) | B | 137.7/147 |
| R1507 | 7030007230 | S.RES ERA3YED 102V (1K) | T | 132.6/146.3 |
| R1508 | 7030007230 | S.RES ERA3YED 102V (1K) | T | 133.9/146.3 |
| R1509 | 7030007230 | S.RES ERA3YED 102V (1K) | T | 139.1/158.9 |

## [RXPLL-A UNIT]

| REF NO. | ORDER NO. | DESCRIPTION | M. | H/V LOCATION |
|---|---|---|---|---|
| R1510 | 7030005321 | S.RES ERA3YED 103V (10K) | T | 139.1/157.6 |
| R1511 | 7030009861 | S.RES ERA3YED 471V (470) | T | 136.5/157.6 |
| R1512 | 7030003380 | S.RES ERJ3GEYJ 331 V (330) | T | 129.6/151.6 |
| R1513 | 7030003380 | S.RES ERJ3GEYJ 331 V (330) | T | 129.6/155.5 |
| R1514 | 7030005321 | S.RES ERA3YED 103V (10K) | T | 129.6/160.8 |
| R1515 | 7030005321 | S.RES ERA3YED 103V (10K) | T | 133.5/160.8 |
| R1516 | 7310005090 | S.TRI RH03ADC13X (1K) | T | 119.2/157.7 |
| R1517 | 7030005321 | S.RES ERA3YED 103V (10K) | T | 115.3/158 |
| R1518 | 7030005321 | S.RES ERA3YED 103V (10K) | T | 134.8/160.8 |
| R1519 | 7030005321 | S.RES ERA3YED 103V (10K) | T | 131.7/171.7 |
| R1520 | 7030005321 | S.RES ERA3YED 103V (10K) | T | 136.1/160.8 |
| R1521 | 7030010980 | S.RES ERA3YHD 470V (47) | T | 126.5/133 |
| R1522 | 7030009841 | S.RES ERA3YHD 330V (33) | T | 126/141.1 |
| R1523 | 7030009851 | S.RES ERA3YED 271V (270) | T | 123.7/146.3 |
| R1524 | 7030011050 | S.RES ERA3YHD 100V (10) | T | 122.4/143.5 |
| R1525 | 7030007230 | S.RES ERA3YED 102V (1K) | B | 128.8/147 |
| R1526 | 7030003460 | S.RES ERJ3GEYJ 152 V (1.5K) | B | 137.7/142.1 |
| R1527 | 7030007230 | S.RES ERA3YED 102V (1K) | T | 119.8/146.3 |
| R1528 | 7030007230 | S.RES ERA3YED 102V (1K) | T | 121.1/146.3 |
| R1529 | 7030007230 | S.RES ERA3YED 102V (1K) | T | 115.3/152.3 |
| R1530 | 7030003380 | S.RES ERJ3GEYJ 331 V (330) | T | 128/151.6 |
| R1531 | 7030003380 | S.RES ERJ3GEYJ 331 V (330) | T | 128/155.5 |
| R1532 | 7030005321 | S.RES ERA3YED 103V (10K) | T | 124.1/160.8 |
| R1533 | 7030005321 | S.RES ERA3YED 103V (10K) | T | 128/160.8 |
| R1534 | 7030005321 | S.RES ERA3YED 103V (10K) | T | 122.8/160.8 |
| R1535 | 7030005321 | S.RES ERA3YED 103V (10K) | T | 121.5/160.8 |
| R1536 | 7030005321 | S.RES ERA3YED 103V (10K) | T | 129/171.7 |
| R1537 | 7030003320 | S.RES ERJ3GEYJ 101 V (100) | T | 115.5/164.5 |
| R1538 | 7030003320 | S.RES ERJ3GEYJ 101 V (100) | T | 107.1/170.1 |
| R1539 | 7030008061 | S.RES ERA3YED 222V (2.2K) | B | 131.8/176.4 |
| R1540 | 7030010390 | S.RES ERA3YED 821V (820) | B | 128.7/177.1 |
| R1541 | 7030003320 | S.RES ERJ3GEYJ 101 V (100) | T | 107.1/178.8 |
| R1542 | 7030003320 | S.RES ERJ3GEYJ 101 V (100) | T | 115.5/173.2 |
| R1543 | 7030009691 | S.RES ERA3YED 101V (100) | B | 130.6/179 |
| R1651 | 7030003380 | S.RES ERJ3GEYJ 331 V (330) | B | 100.9/144.8 |
| R1652 | 7030003220 | S.RES ERJ3GEYJ 150 V (15) | B | 102.7/144.8 |
| R1653 | 7030003380 | S.RES ERJ3GEYJ 331 V (330) | B | 101.9/142.9 |
| R1654 | 7030010980 | S.RES ERA3YHD 470V (47) | B | 105.5/142.2 |
| R1655 | 7030009861 | S.RES ERA3YED 471V (470) | B | 108.8/140 |
| R1656 | 7030003630 | S.RES ERJ3GEYJ 393 V (39K) | B | 108.3/142.2 |
| R1657 | 7030005871 | S.RES ERA3YKD 104V (100K) | T | 108/133.1 |
| R1658 | 7030003320 | S.RES ERJ3GEYJ 101 V (100) | T | 110.6/133.1 |
| R1659 | 7030009691 | S.RES ERA3YED 101V (100) | T | 115.8/124.9 |
| R1660 | 7030009691 | S.RES ERA3YED 101V (100) | T | 115.8/128.7 |
| R1661 | 7030005321 | S.RES ERA3YED 103V (10K) | T | 135.1/175.4 |
| R1662 | 7030005321 | S.RES ERA3YED 103V (10K) | T | 135.2/172.8 |
| R1663 | 7030005321 | S.RES ERA3YED 103V (10K) | T | 144.3/175.4 |
| R1664 | 7030005321 | S.RES ERA3YED 103V (10K) | T | 139.9/172.1 |
| R1665 | 7030003320 | S.RES ERJ3GEYJ 101 V (100) | T | 109.3/133.1 |
| R1667 | 7030003360 | S.RES ERJ3GEYJ 221 V (220) | T | 139.2/170.2 |
| R1668 | 7030003360 | S.RES ERJ3GEYJ 221 V (220) | T | 141.8/170.2 |
| R1670 | 7030003800 | S.RES ERJ3GEYJ 105 V (1M) | T | 140.2/164.1 |
| R1673 | 7030007230 | S.RES ERA3YED 102V (1K) | B | 146/174.5 |
| R1674 | 7030003370 | S.RES ERJ3GEYJ 271 V (270) [USA] | B | 145.1/177.1 |
| | 7030003370 | S.RES ERJ3GEYJ 271 V (270) [EUR] | | |
| | 7030003370 | S.RES ERJ3GEYJ 271 V (270) [FRA] | | |
| | 7030003370 | S.RES ERJ3GEYJ 271 V (270) [DEN] | | |
| | 7030003370 | S.RES ERJ3GEYJ 271 V (270) [ITR] | | |
| | 7030003370 | S.RES ERJ3GEYJ 271 V (270) [KOR] | | |
| | 7030003370 | S.RES ERJ3GEYJ 271 V (270) [ESP] | | |
| | 7030003370 | S.RES ERJ3GEYJ 271 V (270) [AUS] | | |
| | 7030003370 | S.RES ERJ3GEYJ 271 V (270) [UK] | | |
| | 7030003370 | S.RES ERJ3GEYJ 271 V (270) [RX] | | |
| | 7030009851 | S.RES ERA3YED 271V (270) [CHN] | | |
| R1675 | 7030009591 | S.RES ERA3YED 472V (4.7K) | T | 136.6/170.2 |
| R1677 | 7030009591 | S.RES ERA3YED 472V (4.7K) | T | 143.1/170.2 |
| R1701 | 7030003360 | S.RES ERJ3GEYJ 221 V (220) | T | 162.4/147.4 |
| R1703 | 7030003360 | S.RES ERJ3GEYJ 221 V (220) | T | 159.8/147.4 |
| R1704 | 7030003360 | S.RES ERJ3GEYJ 221 V (220) | T | 158.5/147.4 |
| R1706 | 7030003360 | S.RES ERJ3GEYJ 221 V (220) | T | 155.9/147.4 |
| R1707 | 7030003360 | S.RES ERJ3GEYJ 221 V (220) | T | 154.6/147.4 |
| R1708 | 7030003360 | S.RES ERJ3GEYJ 221 V (220) | T | 153.3/147.4 |
| R1709 | 7030003480 | S.RES ERJ3GEYJ 222 V (2.2K) | T | 149.7/159.3 |
| R1710 | 7030003480 | S.RES ERJ3GEYJ 222 V (2.2K) | T | 148.4/159.3 |
| R1711 | 7030003540 | S.RES ERJ3GEYJ 682 V (6.8K) | T | 147.1/159.3 |
| R1712 | 7030003540 | S.RES ERJ3GEYJ 682 V (6.8K) | T | 145.8/159.3 |
| R1713 | 7030003660 | S.RES ERJ3GEYJ 683 V (68K) | T | 145.8/157.2 |
| R1714 | 7030003660 | S.RES ERJ3GEYJ 683 V (68K) | T | 145.8/155.9 |
| R1715 | 7030003540 | S.RES ERJ3GEYJ 682 V (6.8K) | T | 143.9/164.8 |
| R1716 | 7030007230 | S.RES ERA3YED 102V (1K) | T | 164.2/164.8 |
| R1717 | 7030007230 | S.RES ERA3YED 102V (1K) | T | 164.2/163.5 |
| R1718 | 7030007230 | S.RES ERA3YED 102V (1K) | T | 164.2/162.2 |
| R1719 | 7030003660 | S.RES ERJ3GEYJ 683 V (68K) | T | 144.3/166.8 |
| | | | | |
| C1 | 4030011600 | S.CER C1608 JB 1E 104K-T | T | 10.8/18.2 |
| C2 | 4030006880 | S.CER C1608 JB 1H 472K-T | T | 25.7/29.5 |
| C14 | 4030006880 | S.CER C1608 JB 1H 472K-T | T | 37.7/12.5 |
| C15 | 4030006880 | S.CER C1608 JB 1H 472K-T | T | 31.2/15.4 |
| C16 | 4030006880 | S.CER C1608 JB 1H 472K-T | T | 35.1/15.4 |
| C17 | 4030006880 | S.CER C1608 JB 1H 472K-T | T | 13.8/12.6 |
| C18 | 4030006880 | S.CER C1608 JB 1H 472K-T | T | 16.8/12.6 |
| C19 | 4030006880 | S.CER C1608 JB 1H 472K-T | T | 29.5/12.6 |
| C20 | 4030006880 | S.CER C1608 JB 1H 472K-T | T | 87.4/127.8 |
| C21 | 4030006880 | S.CER C1608 JB 1H 472K-T | T | 88.7/127.8 |
| C22 | 4030006880 | S.CER C1608 JB 1H 472K-T | T | 90/127.8 |
| C30 | 4030011600 | S.CER C1608 JB 1E 104K-T | T | 19.1/112.4 |
| C31 | 4030011600 | S.CER C1608 JB 1E 104K-T | T | 20.4/113.7 |
| C32 | 4030011600 | S.CER C1608 JB 1E 104K-T | T | 24.3/111.1 |
| C51 | 4510008520 | S.ELE EEE1CA470SP | T | 84/20.3 |
| C52 | 4030011600 | S.CER C1608 JB 1E 104K-T | T | 78.9/23.7 |
| C53 | 4030011600 | S.CER C1608 JB 1E 104K-T | T | 75.1/23.7 |
| C54 | 4510008500 | S.ELE EEE1CA101WP | T | 70/20.3 |
| C61 | 4510008520 | S.ELE EEE1CA470SP | T | 62.9/20.3 |

M.=Mounted side (T: Mounted on the Top side, B: Mounted on the Bottom side)
S.=Surface mount

## [RXPLL-A UNIT]

| REF NO. | ORDER NO. | DESCRIPTION | M. | H/V LOCATION |
|---|---|---|---|---|
| C62 | 4030011600 | S.CER C1608 JB 1E 104K-T | B | 58.2/19.9 |
| C63 | 4030011600 | S.CER C1608 JB 1E 104K-T | B | 54.8/19.9 |
| C64 | 4510008500 | S.ELE EEE1CA101WP | T | 50.1/20.3 |
| C101 | 4030006880 | S.CER C1608 JB 1H 472K-T | T | 39.7/80.7 |
| C102 | 4030011600 | S.CER C1608 JB 1E 104K-T | T | 41.8/79.9 |
| C103 | 4510008540 | S.ELE EEE1CA100SR | T | 40.2/76.8 |
| C104 | 4030011600 | S.CER C1608 JB 1E 104K-T | T | 21.4/100.2 |
| C105 | 4030011600 | S.CER C1608 JB 1E 104K-T | T | 21.4/88.2 |
| C106 | 4030011600 | S.CER C1608 JB 1E 104K-T | T | 21.4/84.4 |
| C107 | 4030011600 | S.CER C1608 JB 1E 104K-T | T | 24.4/79.8 |
| C108 | 4030011600 | S.CER C1608 JB 1E 104K-T | T | 27/79.8 |
| C109 | 4030011600 | S.CER C1608 JB 1E 104K-T | T | 30.8/79.8 |
| C110 | 4030011600 | S.CER C1608 JB 1E 104K-T | T | 36.8/79.8 |
| C111 | 4030011600 | S.CER C1608 JB 1E 104K-T | T | 41.2/88.5 |
| C112 | 4030011600 | S.CER C1608 JB 1E 104K-T | T | 41.3/82.6 |
| C114 | 4030011600 | S.CER C1608 JB 1E 104K-T | T | 39.5/98.4 |
| C115 | 4030011600 | S.CER C1608 JB 1E 104K-T | T | 38.1/98.4 |
| C116 | 4030011600 | S.CER C1608 JB 1E 104K-T | T | 35.3/99.6 |
| C117 | 4030011600 | S.CER C1608 JB 1E 104K-T | T | 23.3/98.8 |
| C118 | 4030011600 | S.CER C1608 JB 1E 104K-T | T | 42.6/82.6 |
| C119 | 4030011600 | S.CER C1608 JB 1E 104K-T | B | 31.2/86.7 |
| C120 | 4030006880 | S.CER C1608 JB 1H 472K-T | T | 36.7/101.5 |
| C121 | 4030011600 | S.CER C1608 JB 1E 104K-T | T | 39.5/101.5 |
| C125 | 4030011600 | S.CER C1608 JB 1E 104K-T | T | 14.6/83.1 |
| C129 | 4030011600 | S.CER C1608 JB 1E 104K-T | T | 33.4/79.8 |
| C130 | 4030017810 | S.CER C1608 CH 1H 102J-T | B | 47.6/106.6 |
| C131 | 4030011600 | S.CER C1608 JB 1E 104K-T | T | 30.4/73.2 |
| C132 | 4030011600 | S.CER C1608 JB 1E 104K-T | T | 35.5/73.2 |
| C133 | 4030006880 | S.CER C1608 JB 1H 472K-T | B | 43.5/98.6 |
| C134 | 4030006880 | S.CER C1608 JB 1H 472K-T | B | 43.5/96.8 |
| C135 | 4030006880 | S.CER C1608 JB 1H 472K-T | T | 46/95.5 |
| C136 | 4030006880 | S.CER C1608 JB 1H 472K-T | T | 46/94.2 |
| C137 | 4030006880 | S.CER C1608 JB 1H 472K-T | T | 46/90.3 |
| C138 | 4030006880 | S.CER C1608 JB 1H 472K-T | T | 46.1/87.7 |
| C139 | 4030006880 | S.CER C1608 JB 1H 472K-T | B | 43.5/100.4 |
| C140 | 4030006880 | S.CER C1608 JB 1H 472K-T | B | 43.5/102.2 |
| C141 | 4030004740 | S.CER C2012 JB 1H 472K-T | B | 34.3/85.1 |
| C142 | 4550007470 | S.TAN F931A107MNMBMA | B | 19.4/87.4 |
| C150 | 4340000050 | S.MYL ECH-U 1C472JB5 | T | 16.3/64.6 |
| C151 | 4550007520 | S.TAN F931A106MAABMA | B | 38.6/92.1 |
| C152 | 4030007070 | S.CER C1608 CH 1H 330J-T | T | 19.2/59.9 |
| C153 | 4030009910 | S.CER C1608 CH 1H 040B-T | T | 21.3/55.4 |
| C154 | 4610001850 | S.TRI TZB4R200AB10R00 (TZBX4R200BA110) | T | 17.6/55.1 |
| C155 | 4030016550 | S.CER CM105 CH 151G 50AT | T | 24.1/55.4 |
| C156 | 4030016550 | S.CER CM105 CH 151G 50AT | T | 26.9/55.4 |
| C157 | 4030016550 | S.CER CM105 CH 151G 50AT | T | 26.9/56.7 |
| C158 | 4030006880 | S.CER C1608 JB 1H 472K-T | T | 23.3/53.1 |
| C159 | 4030006880 | S.CER C1608 JB 1H 472K-T | B | 23/51.9 |
| C161 | 4510008540 | S.ELE EEE1CA100SR | T | 31.3/61 |
| C162 | 4030009920 | S.CER C1608 CH 1H 050B-T | B | 33.6/53 |
| C163 | 4030011600 | S.CER C1608 JB 1E 104K-T | B | 36.9/59.6 |
| C164 | 4030006880 | S.CER C1608 JB 1H 472K-T | B | 30.3/54.8 |
| C165 | 4030006880 | S.CER C1608 JB 1H 472K-T | B | 30.8/74 |
| C166 | 4030011600 | S.CER C1608 JB 1E 104K-T | B | 34.9/78.2 |
| C167 | 4030006880 | S.CER C1608 JB 1H 472K-T | B | 37.4/74 |
| C201 | 4030011340 | S.CER C1608 CH 1H 471J-T | T | 33.8/40.4 |
| C202 | 4510009280 | S.ELE EEE1EA4R7SR | T | 26.5/44 |
| C203 | 4030006900 | S.CER C1608 JB 1H 103K-T | T | 32.5/38.3 |
| C204 | 4030006880 | S.CER C1608 JB 1H 472K-T | T | 25.4/35.3 |
| C205 | 4030006880 | S.CER C1608 JB 1H 472K-T | T | 25.4/34 |
| C206 | 4030006880 | S.CER C1608 JB 1H 472K-T | T | 31.1/43 |
| C207 | 4030007030 | S.CER C1608 CH 1H 150J-T | B | 46.8/32.4 |
| C208 | 4030007030 | S.CER C1608 CH 1H 150J-T | T | 32.5/41 |
| C209 | 4030011340 | S.CER C1608 CH 1H 471J-T | T | 44.1/26.1 |
| C210 | 4550007620 | S.TAN F931V224MAABMA | T | 46.2/26.7 |
| C211 | 4550007300 | S.TAN F931A335MAABMA | B | 46.1/41.6 |
| C219 | 4030006880 | S.CER C1608 JB 1H 472K-T | T | 33.8/37.8 |
| C220 | 4030007130 | S.CER C1608 CH 1H 101J-T | T | 54.7/37.6 |
| C221 | 4030009520 | S.CER C1608 CH 1H 020B-T | T | 54.7/32 |
| C222 | 4610001860 | S.TRI TZB4Z060AB10R00 (TZBX4R200BA110) | T | 68.1/32.6 |
| C223 | 4030007080 | S.CER C1608 CH 1H 390J-T | T | 73.2/36.3 |
| C224 | 4030007010 | S.CER C1608 CH 1H 100D-T | T | 73.2/38.9 |
| C225 | 4030007050 | S.CER C1608 CH 1H 220J-T | T | 73.6/30.9 |
| C226 | 4030006880 | S.CER C1608 JB 1H 472K-T | T | 71/30.9 |
| C227 | 4030009920 | S.CER C1608 CH 1H 050B-T | T | 75.1/32.6 |
| C228 | 4510008540 | S.ELE EEE1CA100SR | T | 68.8/37.8 |
| C229 | 4030009530 | S.CER C1608 CH 1H 030B-T | T | 77.8/32.6 |
| C230 | 4030007100 | S.CER C1608 CH 1H 560J-T | T | 54.7/50 |
| C231 | 4030009510 | S.CER C1608 CH 1H 010B-T | T | 54.7/44.6 |
| C232 | 4610001860 | S.TRI TZB4Z060AB10R00 (TZBX4R200BA110) | T | 68.1/45.1 |
| C233 | 4030007070 | S.CER C1608 CH 1H 330J-T | T | 73.2/48.8 |
| C234 | 4030009920 | S.CER C1608 CH 1H 050B-T | T | 73.2/51.4 |
| C235 | 4030007020 | S.CER C1608 CH 1H 120J-T | T | 73.6/43.3 |
| C236 | 4030006880 | S.CER C1608 JB 1H 472K-T | T | 71/43.3 |
| C237 | 4030009910 | S.CER C1608 CH 1H 040B-T | T | 75.1/45 |
| C238 | 4510008540 | S.ELE EEE1CA100SR | T | 68.8/50.3 |
| C239 | 4030009910 | S.CER C1608 CH 1H 040B-T | T | 77.8/45 |
| C240 | 4030007080 | S.CER C1608 CH 1H 390J-T | T | 54.7/62.5 |
| C241 | 4030009510 | S.CER C1608 CH 1H 010B-T | T | 54.7/57.1 |
| C242 | 4610001860 | S.TRI TZB4Z060AB10R00 (TZBX4R200BA110) | T | 68.1/57.6 |
| C243 | 4030007060 | S.CER C1608 CH 1H 270J-T | T | 73.2/61.3 |
| C244 | 4030009910 | S.CER C1608 CH 1H 040B-T | T | 73.2/63.9 |
| C245 | 4030009920 | S.CER C1608 CH 1H 050B-T | T | 73.6/55.8 |
| C246 | 4030006880 | S.CER C1608 JB 1H 472K-T | T | 71/55.9 |
| C247 | 4030009530 | S.CER C1608 CH 1H 030B-T | T | 75.1/57.5 |
| C248 | 4510008540 | S.ELE EEE1CA100SR | T | 68.8/62.9 |
| C250 | 4030007100 | S.CER C1608 CH 1H 560J-T | T | 54.7/75 |
| C251 | 4030009540 | S.CER C1608 CH 1H 1R5B-T | T | 54.7/69.6 |
| C252 | 4610001810 | S.TRI TZB4Z030AB10R00 (TZBX4Z030BA110) | T | 68.1/70.1 |

## [RXPLL-A UNIT]

| REF NO. | ORDER NO. | DESCRIPTION | M. | H/V LOCATION |
|---|---|---|---|---|
| C253 | 4030007080 | S.CER C1608 CH 1H 390J-T | T | 73.2/73.8 |
| C254 | 4030009530 | S.CER C1608 CH 1H 030B-T | T | 73.2/76.4 |
| C255 | 4030006990 | S.CER C1608 CH 1H 080D-T | T | 73.6/68.4 |
| C256 | 4030006880 | S.CER C1608 JB 1H 472K-T | T | 71/68.4 |
| C257 | 4030007010 | S.CER C1608 CH 1H 100D-T | T | 75.1/70 |
| C258 | 4510008540 | S.ELE EEE1CA100SR | T | 68.8/75.4 |
| C260 | 4030007110 | S.CER C1608 CH 1H 680J-T | T | 54.7/87.5 |
| C262 | 4610001810 | S.TRI TZB4Z030AB10R00 (TZBX4Z030BA110) | T | 68.1/82.6 |
| C263 | 4030007080 | S.CER C1608 CH 1H 390J-T | T | 73.2/86.3 |
| C264 | 4030009530 | S.CER C1608 CH 1H 030B-T | T | 73.2/88.9 |
| C265 | 4030011770 | S.CER C1608 CH 1H 060B-T | T | 73.6/80.9 |
| C266 | 4030006880 | S.CER C1608 JB 1H 472K-T | T | 71/80.9 |
| C267 | 4030007010 | S.CER C1608 CH 1H 100D-T | T | 75.1/82.5 |
| C268 | 4510008540 | S.ELE EEE1CA100SR | T | 68.8/87.9 |
| C272 | 4610001860 | S.TRI TZB4Z060AB10R00 (TZBX4R200BA110) | T | 68.1/95.1 |
| C273 | 4030007050 | S.CER C1608 CH 1H 220J-T | T | 73.2/98.2 |
| C274 | 4030009530 | S.CER C1608 CH 1H 030B-T | T | 73.2/100.8 |
| C275 | 4030009920 | S.CER C1608 CH 1H 050B-T | T | 73.6/92.8 |
| C276 | 4030006880 | S.CER C1608 JB 1H 472K-T | T | 71/92.8 |
| C277 | 4030007010 | S.CER C1608 CH 1H 100D-T | T | 75.1/95 |
| C278 | 4510008540 | S.ELE EEE1CA100SR | T | 68.8/100.4 |
| C283 | 4030017810 | S.CER C1608 CH 1H 102J-T | T | 82.1/36.3 |
| C284 | 4030006880 | S.CER C1608 JB 1H 472K-T | T | 84.5/34.3 |
| C285 | 4030017810 | S.CER C1608 CH 1H 102J-T | T | 82.1/48.8 |
| C286 | 4030006880 | S.CER C1608 JB 1H 472K-T | T | 84.5/46.9 |
| C287 | 4030017810 | S.CER C1608 CH 1H 102J-T | T | 82.1/61.3 |
| C288 | 4030006880 | S.CER C1608 JB 1H 472K-T | T | 83.9/57.5 |
| C289 | 4030017810 | S.CER C1608 CH 1H 102J-T | T | 82.1/73.8 |
| C290 | 4030006880 | S.CER C1608 JB 1H 472K-T | T | 84.3/70.4 |
| C291 | 4030017810 | S.CER C1608 CH 1H 102J-T | T | 82.1/86.3 |
| C292 | 4030006880 | S.CER C1608 JB 1H 472K-T | T | 84.4/84.4 |
| C293 | 4030017810 | S.CER C1608 CH 1H 102J-T | T | 82.1/98.7 |
| C294 | 4030006880 | S.CER C1608 JB 1H 472K-T | T | 83.2/93.9 |
| C297 | 4030009920 | S.CER C1608 CH 1H 050B-T | T | 52.6/59.4 |
| C299 | 4030007050 | S.CER C1608 CH 1H 220J-T | T | 52.6/84.4 |
| C301 | 4030006880 | S.CER C1608 JB 1H 472K-T | T | 89.3/30.6 |
| C302 | 4030006880 | S.CER C1608 JB 1H 472K-T | T | 94.9/28 |
| C303 | 4030006880 | S.CER C1608 JB 1H 472K-T | B | 92.6/39.8 |
| C304 | 4030006880 | S.CER C1608 JB 1H 472K-T | B | 92.6/45.2 |
| C305 | 4030006880 | S.CER C1608 JB 1H 472K-T | B | 89.1/48.8 |
| C306 | 4030006880 | S.CER C1608 JB 1H 472K-T | B | 89.1/50.6 |
| C309 | 4030017810 | S.CER C1608 CH 1H 102J-T | T | 94.9/42.7 |
| C310 | 4030011600 | S.CER C1608 JB 1E 104K-T | T | 92.8/42.1 |
| C311 | 4510008520 | S.ELE EEE1CA470SP | T | 93.4/47.4 |
| C312 | 4030006880 | S.CER C1608 JB 1H 472K-T | B | 89/27.4 |
| C313 | 4030006880 | S.CER C1608 JB 1H 472K-T | B | 93.7/23.1 |
| C331 | 4030007110 | S.CER C1608 CH 1H 680J-T | T | 89.3/32.2 |
| C332 | 4030007160 | S.CER C1608 CH 1H 181J-T | T | 92.1/33.5 |
| C333 | 4030007110 | S.CER C1608 CH 1H 680J-T | T | 89.3/33.5 |
| C334 | 4030007050 | S.CER C1608 CH 1H 220J-T | T | 94.9/36 |
| C335 | 4030006980 | S.CER C1608 CH 1H 070D-T | T | 94.9/37.4 |
| C336 | 4030007030 | S.CER C1608 CH 1H 150J-T | T | 92.1/38.8 |
| C337 | 4030007050 | S.CER C1608 CH 1H 220J-T | T | 94.9/38.8 |
| C341 | 4030006880 | S.CER C1608 JB 1H 472K-T | T | 94.9/40.1 |
| C342 | 4030006880 | S.CER C1608 JB 1H 472K-T | T | 86.5/33.5 |
| C344 | 4030011600 | S.CER C1608 JB 1E 104K-T | T | 94.9/41.4 |
| C351 | 4030017810 | S.CER C1608 CH 1H 102J-T | T | 94.9/61.6 |
| C352 | 4030011600 | S.CER C1608 JB 1E 104K-T | T | 94.9/62.9 |
| C353 | 4510008520 | S.ELE EEE1CA470SP | T | 93.4/67.1 |
| C354 | 4030006880 | S.CER C1608 JB 1H 472K-T | T | 89.3/51.7 |
| C355 | 4030006880 | S.CER C1608 JB 1H 472K-T | T | 94.9/55.1 |
| C356 | 4030006880 | S.CER C1608 JB 1H 472K-T | T | 89.2/58.4 |
| C357 | 4030006880 | S.CER C1608 JB 1H 472K-T | T | 94.9/57.7 |
| C358 | 4030006880 | S.CER C1608 JB 1H 472K-T | B | 89.2/60.3 |
| C359 | 4030006880 | S.CER C1608 JB 1H 472K-T | B | 92.6/62.1 |
| C360 | 4030006880 | S.CER C1608 JB 1H 472K-T | B | 89.9/66.9 |
| C361 | 4030006880 | S.CER C1608 JB 1H 472K-T | T | 89.3/83.4 |
| C363 | 4030006880 | S.CER C1608 JB 1H 472K-T | T | 86.1/60.9 |
| C364 | 4030017810 | S.CER C1608 CH 1H 102J-T | T | 86.7/52.3 |
| C365 | 4030006880 | S.CER C1608 JB 1H 472K-T | T | 90.3/59.9 |
| C421 | 4030006880 | S.CER C1608 JB 1H 472K-T | T | 94.1/88.5 |
| C422 | 4030006880 | S.CER C1608 JB 1H 472K-T | T | 87.3/88.5 |
| C423 | 4030006880 | S.CER C1608 JB 1H 472K-T | T | 94.1/93.3 |
| C424 | 4030006880 | S.CER C1608 JB 1H 472K-T | T | 87.9/93.3 |
| C425 | 4030006880 | S.CER C1608 JB 1H 472K-T | T | 92.8/93.3 |
| C426 | 4030006880 | S.CER C1608 JB 1H 472K-T | B | 94.6/87.3 |
| C427 | 4030006880 | S.CER C1608 JB 1H 472K-T | T | 92.1/86.5 |
| C428 | 4030006880 | S.CER C1608 JB 1H 472K-T | T | 89.3/86.5 |
| C441 | 4030007040 | S.CER C1608 CH 1H 180J-T | T | 94.9/71.3 |
| C442 | 4030007040 | S.CER C1608 CH 1H 180J-T | T | 94.9/72.6 |
| C443 | 4030007020 | S.CER C1608 CH 1H 120J-T | T | 92.1/74.2 |
| C444 | 4030007080 | S.CER C1608 CH 1H 390J-T | T | 94.9/73.9 |
| C445 | 4030011770 | S.CER C1608 CH 1H 060B-T | T | 94.9/75.2 |
| C446 | 4030007060 | S.CER C1608 CH 1H 270J-T | T | 94.9/79.1 |
| C447 | 4030007110 | S.CER C1608 CH 1H 680J-T | T | 92.8/78.9 |
| C448 | 4030006880 | S.CER C1608 JB 1H 472K-T | T | 94.9/76.5 |
| C449 | 4030006880 | S.CER C1608 JB 1H 472K-T | T | 88.1/69.1 |
| C451 | 4030007110 | S.CER C1608 CH 1H 680J-T | T | 92/82.1 |
| C452 | 4030007160 | S.CER C1608 CH 1H 181J-T | T | 92/80.8 |
| C453 | 4030011600 | S.CER C1608 JB 1E 104K-T | T | 94.9/77.8 |
| C501 | 4030006880 | S.CER C1608 JB 1H 472K-T | T | 38.9/131.2 |
| C502 | 4030011600 | S.CER C1608 JB 1E 104K-T | T | 38.9/129.9 |
| C503 | 4510008540 | S.ELE EEE1CA100SR | T | 36.6/126.7 |
| C504 | 4030011600 | S.CER C1608 JB 1E 104K-T | T | 21.4/153.1 |
| C505 | 4550007470 | S.TAN F931A107MNMBMA | B | 19.2/140.3 |
| C506 | 4030011600 | S.CER C1608 JB 1E 104K-T | T | 21.4/141 |
| C507 | 4030011600 | S.CER C1608 JB 1E 104K-T | T | 21.4/137.1 |
| C509 | 4030011600 | S.CER C1608 JB 1E 104K-T | T | 25.8/132.6 |
| C510 | 4030011600 | S.CER C1608 JB 1E 104K-T | T | 28.4/132.6 |
| C511 | 4030011600 | S.CER C1608 JB 1E 104K-T | T | 32.2/132.6 |
| C512 | 4030011600 | S.CER C1608 JB 1E 104K-T | T | 34.8/132.6 |
| C513 | 4030011600 | S.CER C1608 JB 1E 104K-T | T | 37.4/132.6 |

M.=Mounted side (T: Mounted on the Top side, B: Mounted on the Bottom side)
S.=Surface mount

## [RXPLL-A UNIT]

| REF NO. | ORDER NO. | DESCRIPTION | M. | H/V LOCATION |
|---|---|---|---|---|
| C514 | 4030011600 | S.CER C1608 JB 1E 104K-T | T | 41.2/136 |
| C515 | 4030011600 | S.CER C1608 JB 1E 104K-T | T | 41.3/139.7 |
| C516 | 4030011600 | S.CER C1608 JB 1E 104K-T | T | 41.3/142.3 |
| C517 | 4030011600 | S.CER C1608 JB 1E 104K-T | T | 37.6/151.8 |
| C518 | 4030011600 | S.CER C1608 JB 1E 104K-T | T | 34.8/151.8 |
| C519 | 4030011600 | S.CER C1608 JB 1E 104K-T | T | 31.2/151.8 |
| C520 | 4030011600 | S.CER C1608 JB 1E 104K-T | T | 23.3/151.9 |
| C521 | 4030011600 | S.CER C1608 JB 1E 104K-T | T | 41.6/134 |
| C522 | 4550007220 | S.TAN F931A476MCMBMA | B | 40.7/145 |
| C525 | 4030006880 | S.CER C1608 JB 1H 472K-T | T | 35.3/154.5 |
| C526 | 4030011600 | S.CER C1608 JB 1E 104K-T | T | 36.6/154.5 |
| C531 | 4030006880 | S.CER C1608 JB 1H 472K-T | T | 14.6/137.5 |
| C532 | 4030007070 | S.CER C1608 CH 1H 330J-T | T | 17.2/137.5 |
| C533 | 4030007110 | S.CER C1608 CH 1H 680J-T | T | 17.3/133.4 |
| C534 | 4030007110 | S.CER C1608 CH 1H 680J-T | T | 16.8/130.1 |
| C535 | 4030007070 | S.CER C1608 CH 1H 330J-T | T | 18.1/127 |
| C536 | 4030006880 | S.CER C1608 JB 1H 472K-T | T | 20.9/127.6 |
| C537 | 4030006880 | S.CER C1608 JB 1H 472K-T | T | 27.2/126.4 |
| C540 | 4030006880 | S.CER C1608 JB 1H 472K-T | B | 56.3/142.8 |
| C541 | 4510008540 | S.ELE EEE1CA100SR | T | 51/139.3 |
| C542 | 4340000260 | S.MYL ECPU1C104MA5 | B | 47.8/128.7 |
| C543 | 4030007060 | S.CER C1608 CH 1H 270J-T | T | 62.2/136.4 |
| C545 | 4030008560 | S.CER C1608 CH 1H 300J-T | T | 70/137.1 |
| C546 | 4610001830 | S.TRI TZB4S100AB10R00 (TZBX4N100BA110) | T | 65.8/138.7 |
| C547 | 4030007130 | S.CER C1608 CH 1H 101J-T | T | 71.3/137.1 |
| C548 | 4030007010 | S.CER C1608 CH 1H 100D-T | T | 71.3/139.9 |
| C549 | 4030007050 | S.CER C1608 CH 1H 220J-T | T | 68.9/145.1 |
| C550 | 4030006880 | S.CER C1608 JB 1H 472K-T | T | 66.3/143 |
| C551 | 4030009520 | S.CER C1608 CH 1H 020B-T | T | 71.3/142.8 |
| C552 | 4030017810 | S.CER C1608 CH 1H 102J-T | B | 54.6/139.5 |
| C553 | 4030006880 | S.CER C1608 JB 1H 472K-T | B | 56.3/139.5 |
| C554 | 4510008500 | S.ELE EEE1CA101WP | T | 50.9/146.6 |
| C555 | 4030006880 | S.CER C1608 JB 1H 472K-T | B | 47.7/149.5 |
| C556 | 4550007220 | S.TAN F931A476MCMBMA | B | 76.4/136.1 |
| C558 | 4550007520 | S.TAN F931A106MAABMA | B | 43.4/132.5 |
| C559 | 4550007400 | S.TAN F931A225MAABMA | B | 43.4/129.9 |
| C561 | 4550007520 | S.TAN F931A106MAABMA | T | 70/157.5 |
| C562 | 4030006880 | S.CER C1608 JB 1H 472K-T | T | 68.3/155.5 |
| C563 | 4030017810 | S.CER C1608 CH 1H 102J-T | B | 60.1/158 |
| C564 | 4030006880 | S.CER C1608 JB 1H 472K-T | B | 58.8/158 |
| C565 | 4510008520 | S.ELE EEE1CA470SP | T | 50.9/155.6 |
| C566 | 4030006880 | S.CER C1608 JB 1H 472K-T | T | 64.4/155.5 |
| C571 | 4030006880 | S.CER C1608 JB 1H 472K-T | B | 58.5/161.3 |
| C573 | 4030007040 | S.CER C1608 CH 1H 180J-T | B | 72.5/166.8 |
| C574 | 4030009510 | S.CER C1608 CH 1H 010B-T | T | 72.6/169.1 |
| C575 | 4030007040 | S.CER C1608 CH 1H 180J-T | T | 72.6/171.9 |
| C580 | 4030006880 | S.CER C1608 JB 1H 472K-T | T | 41.9/152.4 |
| C581 | 4030006880 | S.CER C1608 JB 1H 472K-T | T | 41.9/144.2 |
| C591 | 4030006880 | S.CER C1608 JB 1H 472K-T | T | 63.5/171.2 |
| C592 | 4030007060 | S.CER C1608 CH 1H 270J-T | T | 62.8/163.1 |
| C593 | 4510008540 | S.ELE EEE1CA100SR | T | 54.4/170.7 |
| C594 | 4030006880 | S.CER C1608 JB 1H 472K-T | T | 57.4/171.9 |
| C596 | 4030006880 | S.CER C1608 JB 1H 472K-T | B | 63.7/168.1 |
| C597 | 4030007050 | S.CER C1608 CH 1H 220J-T | T | 62.2/171.2 |
| C604 | 4030011600 | S.CER C1608 JB 1E 104K-T | B | 50.6/111 |
| C605 | 4510008540 | S.ELE EEE1CA100SR | T | 52.5/110.9 |
| C651 | 4030006880 | S.CER C1608 JB 1H 472K-T | T | 13.5/174 |
| C652 | 4030011600 | S.CER C1608 JB 1E 104K-T | T | 12.7/176.3 |
| C653 | 4510008540 | S.ELE EEE1CA100SR | T | 6.8/172.6 |
| C654 | 4030011600 | S.CER C1608 JB 1E 104K-T | B | 17.3/170.4 |
| C655 | 4030011600 | S.CER C1608 JB 1E 104K-T | T | 25.9/161.4 |
| C656 | 4030011600 | S.CER C1608 JB 1E 104K-T | T | 25.8/177.1 |
| C657 | 4030011600 | S.CER C1608 JB 1E 104K-T | T | 31.7/169.3 |
| C658 | 4030011600 | S.CER C1608 JB 1E 104K-T | T | 13.5/172.7 |
| C659 | 4030011600 | S.CER C1608 JB 1E 104K-T | T | 16.5/163.4 |
| C660 | 4030006880 | S.CER C1608 JB 1H 472K-T | T | 17.6/161.4 |
| C661 | 4030011600 | S.CER C1608 JB 1E 104K-T | T | 13.3/166.1 |
| C662 | 4550007220 | S.TAN F931A476MCMBMA | B | 30.6/170.9 |
| C680 | 4030006880 | S.CER C1608 JB 1H 472K-T | T | 34.3/177.1 |
| C681 | 4030011340 | S.CER C1608 CH 1H 471J-T | T | 40.3/177.1 |
| C682 | 4030007120 | S.CER C1608 CH 1H 820J-T | T | 39.6/175.2 |
| C683 | 4030017870 | S.CER C1608 CH 1H 681J-T | T | 40.9/175.2 |
| C684 | 4030007070 | S.CER C1608 CH 1H 330J-T | B | 39.3/174 |
| C685 | 4030017800 | S.CER C1608 CH 1H 561J-T | B | 42.3/172.6 |
| C686 | 4030011280 | S.CER C1608 CH 1H 271J-T | B | 39.3/170.6 |
| C687 | 4030017810 | S.CER C1608 CH 1H 102J-T | T | 41/169.7 |
| C688 | 4030011280 | S.CER C1608 CH 1H 271J-T | B | 37.5/169.7 |
| C689 | 4030011600 | S.CER C1608 JB 1E 104K-T | T | 37.4/166.4 |
| C690 | 4030011600 | S.CER C1608 JB 1E 104K-T | T | 37.4/161.3 |
| C691 | 4030011600 | S.CER C1608 JB 1E 104K-T | T | 46.4/164 |
| C692 | 4030006880 | S.CER C1608 JB 1H 472K-T | T | 40.3/162.1 |
| C693 | 4030006880 | S.CER C1608 JB 1H 472K-T | B | 58.4/169.6 |
| C694 | 4030006880 | S.CER C1608 JB 1H 472K-T | B | 58.4/164.2 |
| C703 | 4030017810 | S.CER C1608 CH 1H 102J-T | T | 24.3/116.6 |
| C704 | 4030006880 | S.CER C1608 JB 1H 472K-T | T | 23/116.6 |
| C705 | 4510008500 | S.ELE EEE1CA101WP | T | 29.4/118.7 |
| C707 | 4030011600 | S.CER C1608 JB 1E 104K-T | T | 32.1/113.7 |
| C708 | 4030011600 | S.CER C1608 JB 1E 104K-T | T | 32.1/108.1 |
| C709 | 4030007070 | S.CER C1608 CH 1H 330J-T | T | 38.8/112.9 |
| C710 | 4030006880 | S.CER C1608 JB 1H 472K-T | T | 36.2/112.9 |
| C711 | 4030009540 | S.CER C1608 CH 1H 1R5B-T | B | 39.3/113.6 |
| C712 | 4030007070 | S.CER C1608 CH 1H 330J-T | T | 36.2/114.2 |
| C713 | 4030006880 | S.CER C1608 JB 1H 472K-T | T | 42/118.8 |
| C801 | 4030006880 | S.CER C1608 JB 1H 472K-T | T | 58.5/157.6 |
| C802 | 4030007030 | S.CER C1608 CH 1H 150J-T | T | 83.2/149.5 |
| C803 | 4030006900 | S.CER C1608 JB 1H 103K-T | T | 80.9/147.3 |
| C811 | 4030011600 | S.CER C1608 JB 1E 104K-T | T | 44.5/165.9 |
| C812 | 4030011600 | S.CER C1608 JB 1E 104K-T | T | 79.6/177.6 |
| C813 | 4030017800 | S.CER C1608 CH 1H 561J-T | B | 78.9/175.6 |
| C831 | 4030009910 | S.CER C1608 CH 1H 040B-T | T | 91.6/167.3 |
| C832 | 4030009510 | S.CER C1608 CH 1H 010B-T | T | 91.6/157 |
| C834 | 4030007030 | S.CER C1608 CH 1H 150J-T | T | 91.6/154.4 |
| C835 | 4030006900 | S.CER C1608 JB 1H 103K-T | T | 94.4/154.4 |

## [RXPLL-A UNIT]

| REF NO. | ORDER NO. | DESCRIPTION | M. | H/V LOCATION |
|---|---|---|---|---|
| C836 | 4510008540 | S.ELE EEE1CA100SR | T | 77.2/169.6 |
| C837 | 4030006880 | S.CER C1608 JB 1H 472K-T | T | 74.5/165.8 |
| C838 | 4030007020 | S.CER C1608 CH 1H 120J-T | T | 95/160 |
| C1000 | 4030007050 | S.CER C1608 CH 1H 220J-T | B | 177.1/13.8 |
| C1001 | 4030007170 | S.CER C1608 CH 1H 221J-T | T | 177.8/69.5 |
| C1002 | 4030006880 | S.CER C1608 JB 1H 472K-T | B | 153.1/16.2 |
| C1003 | 4030012600 | S.CER C2012 JB 1A 105M-T | T | 157.4/8.2 |
| C1004 | 4030011600 | S.CER C1608 JB 1E 104K-T | B | 169.6/8.7 |
| C1005 | 4030011600 | S.CER C1608 JB 1E 104K-T | T | 162.8/17.2 |
| C1006 | 4030010210 | S.CER C3216 JB 1C 105M-T | T | 173.8/18.6 |
| C1007 | 4030006880 | S.CER C1608 JB 1H 472K-T | T | 172.4/23.9 |
| C1008 | 4030006880 | S.CER C1608 JB 1H 472K-T | T | 160/24 |
| C1009 | 4030006880 | S.CER C1608 JB 1H 472K-T | T | 147.6/23.8 |
| C1010 | 4030012600 | S.CER C2012 JB 1A 105M-T | T | 154.5/28.9 |
| C1011 | 4030012600 | S.CER C2012 JB 1A 105M-T | T | 144.2/29.3 |
| C1012 | 4030010210 | S.CER C3216 JB 1C 105M-T | T | 144.8/40.2 |
| C1013 | 4030012600 | S.CER C2012 JB 1A 105M-T | T | 144.2/33.2 |
| C1014 | 4030018810 | S.CER C3216 CH 1H 333J-T | B | 151.6/48.3 |
| C1015 | 4030012600 | S.CER C2012 JB 1A 105M-T | T | 163.6/13.8 |
| C1016 | 4030012600 | S.CER C2012 JB 1A 105M-T | T | 173.6/33.2 |
| C1017 | 4030012600 | S.CER C2012 JB 1A 105M-T | T | 163.3/33.2 |
| C1020 | 4030012600 | S.CER C2012 JB 1A 105M-T | B | 170/38.6 |
| C1021 | 4030012600 | S.CER C2012 JB 1A 105M-T | B | 154/38.6 |
| C1024 | 4030010210 | S.CER C3216 JB 1C 105M-T | B | 170.5/45.5 |
| C1025 | 4030010210 | S.CER C3216 JB 1C 105M-T | B | 154.7/45.5 |
| C1026 | 4030010210 | S.CER C3216 JB 1C 105M-T | T | 171.4/52.7 |
| C1027 | 4030010210 | S.CER C3216 JB 1C 105M-T | T | 165.6/52.7 |
| C1028 | 4030006880 | S.CER C1608 JB 1H 472K-T | B | 156.4/65.4 |
| C1029 | 4030006880 | S.CER C1608 JB 1H 472K-T | T | 168.5/65.4 |
| C1030 | 4030010210 | S.CER C3216 JB 1C 105M-T | T | 164.5/18 |
| C1031 | 4030012600 | S.CER C2012 JB 1A 105M-T | B | 169.2/10.8 |
| C1032 | 4030011600 | S.CER C1608 JB 1E 104K-T | B | 183.5/65 |
| C1033 | 4550006470 | S.TAN TEESVB2 1D 106M8R | B | 146.5/47.7 |
| C1034 | 4550006470 | S.TAN TEESVB2 1D 106M8R | B | 174/52.1 |
| C1035 | 4550006470 | S.TAN TEESVB2 1D 106M8R | B | 164.6/15.8 |
| C1036 | 4030007120 | S.CER C1608 CH 1H 820J-T | T | 160.2/12.7 |
| C1037 | 4030007090 | S.CER C1608 CH 1H 470J-T | B | 149.3/49.3 |
| C1038 | 4030017810 | S.CER C1608 CH 1H 102J-T | T | 146.6/26.2 |
| C1039 | 4030017810 | S.CER C1608 CH 1H 102J-T | T | 146.5/41 |
| C1040 | 4030017810 | S.CER C1608 CH 1H 102J-T | T | 145.3/36.4 |
| C1041 | 4030006990 | S.CER C1608 CH 1H 080D-T | B | 153.4/31 |
| C1046 | 4030007010 | S.CER C1608 CH 1H 100D-T | B | 168.4/53.7 |
| C1048 | 4030006880 | S.CER C1608 JB 1H 472K-T | B | 170.6/41.6 |
| C1049 | 4030006880 | S.CER C1608 JB 1H 472K-T | B | 154.6/41.6 |
| C1050 | 4030017810 | S.CER C1608 CH 1H 102J-T | B | 170.5/49.5 |
| C1051 | 4030017810 | S.CER C1608 CH 1H 102J-T | B | 154.7/49.4 |
| C1052 | 4030007060 | S.CER C1608 CH 1H 270J-T | B | 164.1/29.6 |
| C1053 | 4030007110 | S.CER C1608 CH 1H 680J-T | T | 175.2/77.3 |
| C1054 | 4030007010 | S.CER C1608 CH 1H 100D-T | B | 175.7/72.4 |
| C1055 | 4030007140 | S.CER C1608 CH 1H 121J-T | B | 175.7/74.2 |
| C1056 | 4030007050 | S.CER C1608 CH 1H 220J-T | T | 175.2/76 |
| C1057 | 4030007130 | S.CER C1608 CH 1H 101J-T | T | 172.1/77.1 |
| C1058 | 4030009920 | S.CER C1608 CH 1H 050B-T | B | 173.2/12.7 |
| C1060 | 4030017810 | S.CER C1608 CH 1H 102J-T | T | 178.6/94.4 |
| C1061 | 4030007090 | S.CER C1608 CH 1H 470J-T | B | 147.7/91.8 |
| C1062 | 4030007170 | S.CER C1608 CH 1H 221J-T | B | 149.5/91.8 |
| C1064 | 4030007090 | S.CER C1608 CH 1H 470J-T | T | 148.7/80.1 |
| C1066 | 4030007010 | S.CER C1608 CH 1H 100D-T | T | 138.6/81.9 |
| C1067 | 4030007010 | S.CER C1608 CH 1H 100D-T | T | 173.4/77.1 |
| C1070 | 4030006980 | S.CER C1608 CH 1H 070D-T | T | 137.2/81.9 |
| C1071 | 4030007100 | S.CER C1608 CH 1H 560J-T | B | 162.2/75.3 |
| C1072 | 4030007170 | S.CER C1608 CH 1H 221J-T | B | 162/78.7 |
| C1073 | 4030007080 | S.CER C1608 CH 1H 390J-T | B | 164.1/76.4 |
| C1074 | 4030007060 | S.CER C1608 CH 1H 270J-T | T | 148.7/78.6 |
| C1081 | 4030006900 | S.CER C1608 JB 1H 103K-T | B | 156.1/86 |
| C1082 | 4030006900 | S.CER C1608 JB 1H 103K-T | B | 151.3/91.8 |
| C1083 | 4030006900 | S.CER C1608 JB 1H 103K-T | B | 151.2/81.6 |
| C1084 | 4030006880 | S.CER C1608 JB 1H 472K-T | B | 149.4/81.6 |
| C1085 | 4030006880 | S.CER C1608 JB 1H 472K-T | B | 153/81.6 |
| C1091 | 4030006880 | S.CER C1608 JB 1H 472K-T | T | 149.3/149.4 |
| C1092 | 4030006880 | S.CER C1608 JB 1H 472K-T | T | 147/138.5 |
| C1093 | 4030006880 | S.CER C1608 JB 1H 472K-T | T | 161.3/135.8 |
| C1101 | 4030006900 | S.CER C1608 JB 1H 103K-T | T | 177/90.9 |
| C1102 | 4030006900 | S.CER C1608 JB 1H 103K-T | T | 175.4/115.5 |
| C1103 | 4030011600 | S.CER C1608 JB 1E 104K-T | T | 179.6/116.4 |
| C1104 | 4030011600 | S.CER C1608 JB 1E 104K-T | T | 175.4/87.7 |
| C1106 | 4030011600 | S.CER C1608 JB 1E 104K-T | T | 179.3/128.8 |
| C1107 | 4030011600 | S.CER C1608 JB 1E 104K-T | B | 172.3/124.2 |
| C1109 | 4030007090 | S.CER C1608 CH 1H 470J-T | T | 175.7/137.9 |
| C1110 | 4030006900 | S.CER C1608 JB 1H 103K-T | T | 175.7/136.6 |
| C1111 | 4030011600 | S.CER C1608 JB 1E 104K-T | T | 176.7/132 |
| C1112 | 4030006900 | S.CER C1608 JB 1H 103K-T | T | 179.3/132 |
| C1113 | 4030007090 | S.CER C1608 CH 1H 470J-T | T | 178.6/140.9 |
| C1114 | 4030006900 | S.CER C1608 JB 1H 103K-T | B | 178.4/138 |
| C1115 | 4030011600 | S.CER C1608 JB 1E 104K-T | T | 175.7/140 |
| C1116 | 4030006900 | S.CER C1608 JB 1H 103K-T | T | 165.7/138.7 |
| C1117 | 4030007010 | S.CER C1608 CH 1H 100D-T | T | 169.7/142.2 |
| C1118 | 4030011600 | S.CER C1608 JB 1E 104K-T | T | 171/142.2 |
| C1119 | 4030006880 | S.CER C1608 JB 1H 472K-T | T | 171.9/146.6 |
| C1120 | 4030006880 | S.CER C1608 JB 1H 472K-T | T | 171.9/148.4 |
| C1121 | 4030011600 | S.CER C1608 JB 1E 104K-T | T | 180.6/147.7 |
| C1122 | 4030009530 | S.CER C1608 CH 1H 030B-T | T | 178.2/120.3 |
| C1123 | 4030006900 | S.CER C1608 JB 1H 103K-T | T | 182.1/100.9 |
| C1124 | 4030006900 | S.CER C1608 JB 1H 103K-T | T | 175.3/105.9 |
| C1125 | 4030006900 | S.CER C1608 JB 1H 103K-T | T | 175.5/85.1 |
| C1126 | 4030011600 | S.CER C1608 JB 1E 104K-T | T | 173.4/131.1 |
| C1151 | 4030007110 | S.CER C1608 CH 1H 680J-T | B | 123.1/64 |
| C1152 | 4030007110 | S.CER C1608 CH 1H 680J-T | B | 123.1/57 |
| C1153 | 4030017810 | S.CER C1608 CH 1H 102J-T | T | 131.5/63.9 |
| C1201 | 4030007110 | S.CER C1608 CH 1H 680J-T | B | 120.2/21.8 |
| C1202 | 4030007110 | S.CER C1608 CH 1H 680J-T | B | 118.4/21.8 |
| C1207 | 4030006880 | S.CER C1608 JB 1H 472K-T | B | 123/11.8 |
| C1214 | 4030007170 | S.CER C1608 CH 1H 221J-T | T | 137.3/55.3 |
| C1215 | 4030011600 | S.CER C1608 JB 1E 104K-T | T | 137.6/51.9 |

M.=Mounted side (T: Mounted on the Top side, B: Mounted on the Bottom side)
S.=Surface mount

## [RXPLL-A UNIT]

| REF NO. | ORDER NO. | DESCRIPTION | M. | H/V LOCATION |
|---|---|---|---|---|
| C1226 | 4030009500 | S.CER C1608 CH 1H 0R5B-T | B | 124.9/35.6 |
| C1227 | 4030009500 | S.CER C1608 CH 1H 0R5B-T | B | 115.4/35.6 |
| C1228 | 4030009920 | S.CER C1608 CH 1H 050B-T | B | 113.9/41.8 |
| C1231 | 4030006900 | S.CER C1608 JB 1H 103K-T | T | 118.9/21.5 |
| C1232 | 4030006900 | S.CER C1608 JB 1H 103K-T | T | 109/21.5 |
| C1234 | 4030006900 | S.CER C1608 JB 1H 103K-T | B | 123.5/38.3 |
| C1235 | 4030006880 | S.CER C1608 JB 1H 472K-T | B | 116.6/32.1 |
| C1236 | 4030006900 | S.CER C1608 JB 1H 103K-T | T | 119.8/40 |
| C1238 | 4030006900 | S.CER C1608 JB 1H 103K-T | B | 114/38.3 |
| C1239 | 4030006880 | S.CER C1608 JB 1H 472K-T | B | 106.8/32.3 |
| C1240 | 4030006900 | S.CER C1608 JB 1H 103K-T | T | 111.7/40.5 |
| C1241 | 4030006900 | S.CER C1608 JB 1H 103K-T | T | 113.6/38.6 |
| C1243 | 4030006880 | S.CER C1608 JB 1H 472K-T | B | 129.6/46.7 |
| C1244 | 4030007080 | S.CER C1608 CH 1H 390J-T | T | 149.6/67 |
| C1245 | 4030007130 | S.CER C1608 CH 1H 101J-T | T | 151/64.4 |
| C1246 | 4030007120 | S.CER C1608 CH 1H 820J-T | T | 150.9/67 |
| C1247 | 4030007090 | S.CER C1608 CH 1H 470J-T | T | 153.4/63.5 |
| C1248 | 4030007130 | S.CER C1608 CH 1H 101J-T | T | 153.4/66.8 |
| C1249 | 4030007020 | S.CER C1608 CH 1H 120J-T | T | 153.1/70.3 |
| C1250 | 4030007100 | S.CER C1608 CH 1H 560J-T | B | 152.4/74.3 |
| C1251 | 4030006900 | S.CER C1608 JB 1H 103K-T | T | 160.2/92.9 |
| C1252 | 4030006900 | S.CER C1608 JB 1H 103K-T | T | 152.7/92.9 |
| C1253 | 4030006900 | S.CER C1608 JB 1H 103K-T | B | 152.5/111.2 |
| C1255 | 4030017810 | S.CER C1608 CH 1H 102J-T | B | 155.7/99.3 |
| C1256 | 4030007010 | S.CER C1608 CH 1H 100D-T | T | 156.3/98.8 |
| C1257 | 4030011600 | S.CER C1608 JB 1E 104K-T | B | 155.7/103 |
| C1258 | 4030007080 | S.CER C1608 CH 1H 390J-T | B | 152/97.5 |
| C1264 | 4030007110 | S.CER C1608 CH 1H 680J-T | T | 122/51.1 |
| C1265 | 4610001830 | S.TRI TZB4S100AB10R00 (TZBX4N100BA110) | T | 163.8/70.8 |
| C1266 | 4030007020 | S.CER C1608 CH 1H 120J-T | T | 160.1/74.5 |
| C1267 | 4030006880 | S.CER C1608 JB 1H 472K-T | B | 157/126.4 |
| C1268 | 4030006980 | S.CER C1608 CH 1H 070D-T | T | 149.6/64.4 |
| C1302 | 4030007060 | S.CER C1608 CH 1H 270J-T | T | 159.3/111 |
| C1303 | 4030006980 | S.CER C1608 CH 1H 070D-T | T | 159.3/112.9 |
| C1304 | 4030007070 | S.CER C1608 CH 1H 330J-T | T | 159.3/114.2 |
| C1305 | 4030007010 | S.CER C1608 CH 1H 100D-T | T | 153.5/114.6 |
| C1306 | 4030009650 | S.CER C1608 CH 1H 240J-T | T | 159.3/115.5 |
| C1307 | 4030007030 | S.CER C1608 CH 1H 150J-T | T | 153.5/120.2 |
| C1308 | 4030006900 | S.CER C1608 JB 1H 103K-T | T | 155.1/127.1 |
| C1309 | 4030007080 | S.CER C1608 CH 1H 390J-T | T | 156.5/125.8 |
| C1310 | 4030007080 | S.CER C1608 CH 1H 390J-T | T | 159.1/128.4 |
| C1311 | 4030006900 | S.CER C1608 JB 1H 103K-T | B | 149/118.9 |
| C1312 | 4030007060 | S.CER C1608 CH 1H 270J-T | T | 155.5/111.7 |
| C1313 | 4030007060 | S.CER C1608 CH 1H 270J-T | T | 159.1/127.1 |
| C1355 | 4030006880 | S.CER C1608 JB 1H 472K-T | T | 144.7/70 |
| C1357 | 4030007000 | S.CER C1608 CH 1H 090D-T | B | 144.6/67.1 |
| C1358 | 4030011600 | S.CER C1608 JB 1E 104K-T | B | 139.1/70.4 |
| C1360 | 4030011600 | S.CER C1608 JB 1E 104K-T | B | 146.4/70.4 |
| C1361 | 4030007020 | S.CER C1608 CH 1H 120J-T | B | 137.7/69.5 |
| C1362 | 4030011600 | S.CER C1608 JB 1E 104K-T | T | 137.5/65.6 |
| C1403 | 4030017810 | S.CER C1608 CH 1H 102J-T | T | 114.7/70.3 |
| C1404 | 4030017810 | S.CER C1608 CH 1H 102J-T | T | 116.3/104.8 |
| C1405 | 4030006900 | S.CER C1608 JB 1H 103K-T | B | 115.9/63.9 |
| C1406 | 4030017810 | S.CER C1608 CH 1H 102J-T | T | 114.2/66.2 |
| C1407 | 4030017810 | S.CER C1608 CH 1H 102J-T | T | 119.9/70.3 |
| C1408 | 4030006900 | S.CER C1608 JB 1H 103K-T | T | 116.3/73 |
| C1409 | 4030006900 | S.CER C1608 JB 1H 103K-T | T | 114.4/68.1 |
| C1410 | 4030007030 | S.CER C1608 CH 1H 150J-T | T | 116.3/83.3 |
| C1411 | 4030006990 | S.CER C1608 CH 1H 080D-T | T | 112.2/87.8 |
| C1412 | 4030007030 | S.CER C1608 CH 1H 150J-T | T | 116.3/93.7 |
| C1413 | 4030007020 | S.CER C1608 CH 1H 120J-T | T | 107/83.3 |
| C1414 | 4030006990 | S.CER C1608 CH 1H 080D-T | T | 103.6/86.6 |
| C1415 | 4030007020 | S.CER C1608 CH 1H 120J-T | T | 107/93.7 |
| C1416 | 4030006900 | S.CER C1608 JB 1H 103K-T | T | 113.2/103.4 |
| C1417 | 4030006900 | S.CER C1608 JB 1H 103K-T | T | 110.5/107.6 |
| C1418 | 4030017810 | S.CER C1608 CH 1H 102J-T | T | 110.4/105.8 |
| C1419 | 4030017810 | S.CER C1608 CH 1H 102J-T | T | 111/108.9 |
| C1420 | 4030007120 | S.CER C1608 CH 1H 820J-T | B | 113.2/114.2 |
| C1421 | 4030007150 | S.CER C1608 CH 1H 151J-T | B | 115/114.2 |
| C1423 | 4030010750 | S.CER C1608 CH 1H 201J-T | B | 120.3/111.1 |
| C1424 | 4030007010 | S.CER C1608 CH 1H 100D-T | T | 132.8/103.3 |
| C1425 | 4030011600 | S.CER C1608 JB 1E 104K-T | T | 136.5/106.2 |
| C1426 | 4030011600 | S.CER C1608 JB 1E 104K-T | T | 137.8/106.2 |
| C1427 | 4030006900 | S.CER C1608 JB 1H 103K-T | T | 133.9/106.2 |
| C1428 | 4030006980 | S.CER C1608 CH 1H 070D-T | T | 119.5/109 |
| C1429 | 4030006900 | S.CER C1608 JB 1H 103K-T | T | 120.5/113.6 |
| C1430 | 4030007040 | S.CER C1608 CH 1H 180J-T | B | 131.9/115.3 |
| C1431 | 4030017810 | S.CER C1608 CH 1H 102J-T | T | 127/116.2 |
| C1432 | 4030009980 | S.CER C1608 JB 1H 152K-T | T | 129.1/114.1 |
| C1433 | 4030011600 | S.CER C1608 JB 1E 104K-T | T | 130.4/114.1 |
| C1434 | 4030009920 | S.CER C1608 CH 1H 050B-T | B | 124.7/134.4 |
| C1435 | 4030009920 | S.CER C1608 CH 1H 050B-T | B | 124.7/131.6 |
| C1436 | 4030011600 | S.CER C1608 JB 1E 104K-T | B | 137.2/122.2 |
| C1437 | 4030009920 | S.CER C1608 CH 1H 050B-T | T | 104/83.3 |
| C1438 | 4030009920 | S.CER C1608 CH 1H 050B-T | T | 102.3/86.6 |
| C1439 | 4030009920 | S.CER C1608 CH 1H 050B-T | T | 110/93.7 |
| C1441 | 4030006880 | S.CER C1608 JB 1H 472K-T | T | 120.5/116.2 |
| C1451 | 4030007020 | S.CER C1608 CH 1H 120J-T | T | 125.5/80.1 |
| C1453 | 4030007030 | S.CER C1608 CH 1H 150J-T | T | 122.1/85.1 |
| C1454 | 4030007030 | S.CER C1608 CH 1H 150J-T | T | 120.8/85.1 |
| C1456 | 4030007020 | S.CER C1608 CH 1H 120J-T | T | 125.5/90.9 |
| C1457 | 4030006900 | S.CER C1608 JB 1H 103K-T | T | 118.3/72.9 |
| C1458 | 4030006900 | S.CER C1608 JB 1H 103K-T | T | 116.6/103.5 |
| C1501 | 4030018530 | S.CER C3216 CH 1H 103J-T | T | 131.2/124.5 |
| C1502 | 4550003220 | S.TAN TEESVA 1E 105M8R | T | 132.1/139.2 |
| C1503 | 4030006900 | S.CER C1608 JB 1H 103K-T | T | 137/142.1 |
| C1504 | 4030012610 | S.CER C2012 JB 1C 474K-T | T | 136.7/140.5 |
| C1505 | 4030007010 | S.CER C1608 CH 1H 100D-T | T | 130/143.5 |
| C1506 | 4030010760 | S.CER C1608 CH 1H 331J-T | T | 131.3/146.3 |
| C1507 | 4510008540 | S.ELE EEE1CA100SR | T | 142.6/140.8 |
| C1508 | 4030011600 | S.CER C1608 JB 1E 104K-T | B | 128.8/148.8 |
| C1509 | 4030018800 | S.CER C3216 CH 1H 223J-T | T | 135.8/145.1 |
| C1510 | 4030007110 | S.CER C1608 CH 1H 680J-T | T | 136.5/158.9 |

## [RXPLL-A UNIT]

| REF NO. | ORDER NO. | DESCRIPTION | M. | H/V LOCATION |
|---|---|---|---|---|
| C1511 | 4510008540 | S.ELE EEE1CA100SR | T | 132.7/150.6 |
| C1512 | 4030011600 | S.CER C1608 JB 1E 104K-T | T | 129.6/149 |
| C1513 | 4030011600 | S.CER C1608 JB 1E 104K-T | T | 129.6/158.1 |
| C1514 | 4510008540 | S.ELE EEE1CA100SR | T | 132.7/156.5 |
| C1515 | 4030007160 | S.CER C1608 CH 1H 181J-T | T | 132.2/160.8 |
| C1516 | 4030009350 | S.CER C1608 CH 1H 3R5B-T | T | 130.9/160.8 |
| C1517 | 4030007110 | S.CER C1608 CH 1H 680J-T | T | 115.3/155 |
| C1518 | 4030018530 | S.CER C3216 CH 1H 103J-T | T | 131.2/132.8 |
| C1519 | 4550003220 | S.TAN TEESVA 1E 105M8R | T | 122.9/140.9 |
| C1520 | 4030006900 | S.CER C1608 JB 1H 103K-T | T | 119.8/140.7 |
| C1521 | 4030012610 | S.CER C2012 JB 1C 474K-T | T | 116.2/142.1 |
| C1522 | 4030007010 | S.CER C1608 CH 1H 100D-T | T | 123.7/143.5 |
| C1523 | 4030010760 | S.CER C1608 CH 1H 331J-T | T | 122.4/146.3 |
| C1524 | 4030018800 | S.CER C3216 CH 1H 223J-T | T | 117.9/145.2 |
| C1525 | 4510008540 | S.ELE EEE1CA100SR | T | 124.9/150.6 |
| C1526 | 4030011600 | S.CER C1608 JB 1E 104K-T | T | 128/149 |
| C1527 | 4030011600 | S.CER C1608 JB 1E 104K-T | T | 128/158.1 |
| C1528 | 4510008540 | S.ELE EEE1CA100SR | T | 124.9/156.5 |
| C1529 | 4030017870 | S.CER C1608 CH 1H 681J-T | T | 125.4/160.8 |
| C1530 | 4030011330 | S.CER C1608 CH 1H 391J-T | T | 126.7/160.8 |
| C1531 | 4510008500 | S.ELE EEE1CA101WP | T | 111.3/167.3 |
| C1532 | 4030011600 | S.CER C1608 JB 1E 104K-T | T | 107.1/167.3 |
| C1533 | 4030011600 | S.CER C1608 JB 1E 104K-T | T | 115.5/167.3 |
| C1534 | 4510008500 | S.ELE EEE1CA101WP | T | 119.7/167.3 |
| C1535 | 4030011600 | S.CER C1608 JB 1E 104K-T | T | 133.7/172.6 |
| C1536 | 4030017870 | S.CER C1608 CH 1H 681J-T | T | 126.2/179.5 |
| C1537 | 4510008500 | S.ELE EEE1CA101WP | T | 111.3/176 |
| C1538 | 4030011600 | S.CER C1608 JB 1E 104K-T | T | 107.1/176 |
| C1539 | 4030011600 | S.CER C1608 JB 1E 104K-T | T | 115.5/176 |
| C1540 | 4510008500 | S.ELE EEE1CA101WP | T | 119.7/176 |
| C1541 | 4030007050 | S.CER C1608 CH 1H 220J-T | T | 124/175 |
| C1651 | 4030006880 | S.CER C1608 JB 1H 472K-T | B | 105.5/144 |
| C1653 | 4030006880 | S.CER C1608 JB 1H 472K-T | B | 109/137.2 |
| C1654 | 4030017810 | S.CER C1608 CH 1H 102J-T | B | 106.9/137.2 |
| C1655 | 4030009530 | S.CER C1608 CH 1H 030B-T | T | 107.6/136.8 |
| C1656 | 4610001970 | S.TRI TZC3P200A110R00 (TZC03P200A1102) | T | 110.9/136.2 |
| C1657 | 4030010220 | S.CER C2012 CH 1H 102J-T | T | 116.4/122.7 |
| C1658 | 4030010220 | S.CER C2012 CH 1H 102J-T | T | 116.4/130.9 |
| C1659 | 4030011600 | S.CER C1608 JB 1E 104K-T | T | 107.8/120 |
| C1660 | 4030011600 | S.CER C1608 JB 1E 104K-T | B | 134/174 |
| C1661 | 4030011600 | S.CER C1608 JB 1E 104K-T | B | 145.2/171.3 |
| C1662 | 4030011600 | S.CER C1608 JB 1E 104K-T | T | 144.3/178 |
| C1663 | 4030011600 | S.CER C1608 JB 1E 104K-T | T | 135.1/170.2 |
| C1665 | 4030006900 | S.CER C1608 JB 1H 103K-T | T | 138.9/164.1 |
| C1666 | 4030006880 | S.CER C1608 JB 1H 472K-T | B | 113.3/144 |
| C1701 | 4030011600 | S.CER C1608 JB 1E 104K-T | T | 153.4/163 |
| C1702 | 4030011600 | S.CER C1608 JB 1E 104K-T | T | 144.4/163 |
| C1703 | 4510004601 | ELE 16 ME 1000 HC | | |
| C1704 | 4030011600 | S.CER C1608 JB 1E 104K-T | B | 180.1/160.2 |
| C1705 | 4030011600 | S.CER C1608 JB 1E 104K-T | B | 186.4/160.2 |
| C1706 | 4510008520 | S.ELE EEE1CA470SP | T | 172.7/154.8 |
| C1707 | 4030011600 | S.CER C1608 JB 1E 104K-T | T | 149.7/154.8 |
| C1708 | 4030006880 | S.CER C1608 JB 1H 472K-T | T | 175.7/166.8 |
| C1709 | 4030006880 | S.CER C1608 JB 1H 472K-T | T | 172.6/166.8 |
| C1710 | 4030006880 | S.CER C1608 JB 1H 472K-T | T | 169.6/166.8 |
| C1711 | 4030011340 | S.CER C1608 CH 1H 471J-T | T | 171.4/163.5 |
| C1712 | 4030011340 | S.CER C1608 CH 1H 471J-T | T | 167.5/163.5 |
| C1713 | 4030006880 | S.CER C1608 JB 1H 472K-T | B | 165.5/168.8 |
| C1714 | 4030006880 | S.CER C1608 JB 1H 472K-T | B | 153.8/141.8 |
| C1716 | 4030006880 | S.CER C1608 JB 1H 472K-T | B | 154.7/145.1 |
| C1717 | 4030006880 | S.CER C1608 JB 1H 472K-T | B | 152.9/145.1 |
| C1719 | 4030006880 | S.CER C1608 JB 1H 472K-T | B | 151.1/145.1 |
| C1720 | 4030006880 | S.CER C1608 JB 1H 472K-T | B | 155.6/141.8 |
| C1721 | 4030006880 | S.CER C1608 JB 1H 472K-T | B | 157.4/141.8 |
| RL1001 | 6330001750 | REL FTR-B4CA012Z | | |
| RL1002 | 6330001750 | REL FTR-B4CA012Z | | |
| RL1003 | 6330001750 | REL FTR-B4CA012Z | | |
| RL1004 | 6330001750 | REL FTR-B4CA012Z | | |
| RL1005 | 6330001750 | REL FTR-B4CA012Z | | |
| RL1006 | 6330001750 | REL FTR-B4CA012Z | | |
| RL1203 | 6330001750 | REL FTR-B4CA012Z | | |
| RL1206 | 6330001750 | REL FTR-B4CA012Z | | |
| J2 | 6510019991 | S.CON 52808-2271(2291) | T | 25/9 |
| J10 | 6510007020 | CON TMP-J01X-V6 | | |
| J351 | 6510007020 | CON TMP-J01X-V6 | | |
| J421 | 6510007020 | CON TMP-J01X-V6 | | |
| J561 | 6510007020 | CON TMP-J01X-V6 | | |
| J601 | 6510007020 | CON TMP-J01X-V6 | | |
| J681 | 6510007020 | CON TMP-J01X-V6 | | |
| J831 | 6510007020 | CON TMP-J01X-V6 | | |
| J1001 | 6510007020 | CON TMP-J01X-V6 | | |
| J1002 | 6510007020 | CON TMP-J01X-V6 | | |
| J1101 | 6510007020 | CON TMP-J01X-V6 | | |
| J1201 | 6510007020 | CON TMP-J01X-V6 | | |
| J1301 | 6510007020 | CON TMP-J01X-V6 | | |
| J1501 | 6510018961 | S.CON B2B-PH-SM4-TB(LF)(SN) | T | 149.6/177.5 |
| J1701 | 6510019981 | S.CON 52808-1671(1690) | T | 168/177.2 |
| W1052 | 9016201006 | WIR 73/98/025/X98/X98 | | |
| W1401 | 9029495075 | JUM 73/98/020/X98/X98 | | |
| W1411 | 7120000480 | S.JUM MJP-0.4-T () | T | 125.1/111.6 |
| EP20 | 6910012350 | S.BEA MMZ1608Y 102BT | T | 85.4/126 |
| EP21 | 6910012350 | S.BEA MMZ1608Y 102BT | T | 88.7/124 |
| EP22 | 6910012350 | S.BEA MMZ1608Y 102BT | T | 90/124 |
| EP101 | 6910012350 | S.BEA MMZ1608Y 102BT | B | 47.6/98.6 |
| EP102 | 6910012350 | S.BEA MMZ1608Y 102BT | B | 47.6/96.8 |

M.=Mounted side (T: Mounted on the Top side, B: Mounted on the Bottom side)
S.=Surface mount

## [RXPLL-A UNIT]

| REF NO. | ORDER NO. | DESCRIPTION | M. | H/V LOCATION |
|---|---|---|---|---|
| EP103 | 6910012350 | S.BEA MMZ1608Y 102BT | T | 46/96.8 |
| EP104 | 6910012350 | S.BEA MMZ1608Y 102BT | T | 46/92.9 |
| EP105 | 6910012350 | S.BEA MMZ1608Y 102BT | T | 46/91.6 |
| EP106 | 6910012350 | S.BEA MMZ1608Y 102BT | T | 46/89 |
| EP107 | 6910012350 | S.BEA MMZ1608Y 102BT | B | 47.6/100.4 |
| EP108 | 6910012350 | S.BEA MMZ1608Y 102BT | B | 47.6/102.2 |
| EP1701 | 6910012350 | S.BEA MMZ1608Y 102BT | T | 170.1/163.5 |
| EP1702 | 6910012350 | S.BEA MMZ1608Y 102BT | T | 168.8/163.5 |
| EP1801 | 6910012350 | S.BEA MMZ1608Y 102BT | B | 153/132.7 |
| EP1802 | 6910012350 | S.BEA MMZ1608Y 102BT | B | 142.5/18.8 |
| EP1804 | 6910012350 | S.BEA MMZ1608Y 102BT | B | 112.5/138.7 |
| EP1805 | 6910012350 | S.BEA MMZ1608Y 102BT | B | 150.2/141.8 |
| EP1806 | 6910012350 | S.BEA MMZ1608Y 102BT | B | 128.6/64.3 |
| EP1807 | 6910012350 | S.BEA MMZ1608Y 102BT | B | 117.4/50.2 |
| EP1808 | 6910012350 | S.BEA MMZ1608Y 102BT | B | 137/166.9 |
| EP1809 | 6910012350 | S.BEA MMZ1608Y 102BT | B | 147.4/127.4 |
| EP1810 | 6910012350 | S.BEA MMZ1608Y 102BT | B | 131.3/64.2 |
| EP1811 | 6910012350 | S.BEA MMZ1608Y 102BT | T | 160.7/56.3 |
| EP1812 | 6910012350 | S.BEA MMZ1608Y 102BT | B | 153.5/137.4 |
| EP1813 | 6910012350 | S.BEA MMZ1608Y 102BT | B | 132.6/65.7 |
| EP1814 | 6910012350 | S.BEA MMZ1608Y 102BT | B | 147.2/22.3 |
| EP1815 | 6910012350 | S.BEA MMZ1608Y 102BT | B | 156/62.6 |
| EP1816 | 6910012350 | S.BEA MMZ1608Y 102BT | B | 160.4/20.9 |
| EP1817 | 6910012350 | S.BEA MMZ1608Y 102BT | B | 168.6/62.2 |
| EP1818 | 6910012350 | S.BEA MMZ1608Y 102BT | B | 151.2/133.2 |
| EP1819 | 6910012350 | S.BEA MMZ1608Y 102BT | B | 145.6/127.9 |
| EP1820 | 6910012350 | S.BEA MMZ1608Y 102BT | B | 148.6/19.8 |
| EP1821 | 6910012350 | S.BEA MMZ1608Y 102BT | B | 148.6/14.1 |
| EP1825 | 6910012350 | S.BEA MMZ1608Y 102BT | B | 126.6/7 |
| EP1826 | 6910012350 | S.BEA MMZ1608Y 102BT | B | 151.5/137.7 |
| EP1830 | 6910012350 | S.BEA MMZ1608Y 102BT | B | 141.3/135.2 |
| EP1831 | 6910012350 | S.BEA MMZ1608Y 102BT | B | 143.4/128.5 |
| EP1832 | 6910012350 | S.BEA MMZ1608Y 102BT | B | 149.2/137.5 |
| EP1833 | 6910012350 | S.BEA MMZ1608Y 102BT | B | 147.2/133.5 |
| EP1834 | 6910012350 | S.BEA MMZ1608Y 102BT | T | 115.8/108.3 |
| EP1835 | 6910012350 | S.BEA MMZ1608Y 102BT | B | 141.6/128.5 |
| EP1836 | 6910012350 | S.BEA MMZ1608Y 102BT | T | 111/110.2 |
| EP1837 | 6910012350 | S.BEA MMZ1608Y 102BT | B | 145.8/134.1 |
| EP1838 | 6910012350 | S.BEA MMZ1608Y 102BT | T | 116.3/106.1 |
| EP9000 | 9026301001 | TUB 0.7 L=14MM [USA] | | |
| | 9026301001 | TUB 0.7 L=14MM [EUR] | | |
| | 9026301001 | TUB 0.7 L=14MM [UK] | | |
| MP1505 | 8510010460 | PLA 1691 MAIN SHIELD PLATE Y295 | B | 143.8/68.2 |

## [RXPLL-B UNIT]

| REF NO. | ORDER NO. | DESCRIPTION | M. | H/V LOCATION |
|---|---|---|---|---|
| IC1 | 1130011530 | S.IC CD74HC4094M96 | T | 11.9/24.1 |
| IC2 | 1130009691 | S.IC TC74HCT7007AF(F) S | T | 22.8/23.3 |
| IC51 | 1180001251 | S.IC TA7808F(TE16L,Q) | T | 77/16.7 |
| IC61 | 1180000421 | S.IC TA78L05F(TE12R,F) | B | 56.5/16 |
| IC101 | 1140007881 | S.IC TC190G08EFG0046 JDZ/SC1246A | T | 31.3/89.7 |
| IC102 | 1130003831 | S.IC TC7S04F(TE85R,F) [USA] | T | 33.1/74.7 |
| | 1130003831 | S.IC TC7S04F(TE85R,F) [EUR] | | |
| | 1130003831 | S.IC TC7S04F(TE85R,F) [FRA] | | |
| | 1130003831 | S.IC TC7S04F(TE85R,F) [DEN] | | |
| | 1130003831 | S.IC TC7S04F(TE85R,F) [ITR] | | |
| | 1130003831 | S.IC TC7S04F(TE85R,F) [KOR] | | |
| | 1130003830 | S.IC TC7S04F (TE85R) [ESP] | | |
| | 1130003830 | S.IC TC7S04F (TE85R) [AUS] | | |
| | 1130003831 | S.IC TC7S04F(TE85R,F) [UK] | | |
| | 1130003831 | S.IC TC7S04F(TE85R,F) [RX] | | |
| | 1130003831 | S.IC TC7S04F(TE85R,F) [CHN] | | |
| IC104 | 1130003831 | S.IC TC7S04F(TE85R,F) [USA] | T | 31.7/101.1 |
| | 1130003831 | S.IC TC7S04F(TE85R,F) [EUR] | | |
| | 1130003831 | S.IC TC7S04F(TE85R,F) [FRA] | | |
| | 1130003831 | S.IC TC7S04F(TE85R,F) [DEN] | | |
| | 1130003831 | S.IC TC7S04F(TE85R,F) [ITR] | | |
| | 1130003831 | S.IC TC7S04F(TE85R,F) [KOR] | | |
| | 1130003830 | S.IC TC7S04F (TE85R) [ESP] | | |
| | 1130003830 | S.IC TC7S04F (TE85R) [AUS] | | |
| | 1130003831 | S.IC TC7S04F(TE85R,F) [UK] | | |
| | 1130003831 | S.IC TC7S04F(TE85R,F) [RX] | | |
| | 1130003831 | S.IC TC7S04F(TE85R,F) [CHN] | | |
| IC201 | 1130009230 | S.IC LMX2306TMX/NOPB | T | 27.9/38.8 |
| IC501 | 1140007881 | S.IC TC190G08EFG00 46JDZ/SC1246A | T | 31.3/142.5 |
| IC502 | 1130003831 | S.IC TC7S04F(TE85R,F) [USA] | T | 24.8/127.4 |
| | 1130003831 | S.IC TC7S04F(TE85R,F) [EUR] | | |
| | 1130003831 | S.IC TC7S04F(TE85R,F) [FRA] | | |
| | 1130003831 | S.IC TC7S04F(TE85R,F) [DEN] | | |
| | 1130003831 | S.IC TC7S04F(TE85R,F) [ITR] | | |
| | 1130003831 | S.IC TC7S04F(TE85R,F) [KOR] | | |
| | 1130003830 | S.IC TC7S04F (TE85R) [ESP] | | |
| | 1130003830 | S.IC TC7S04F (TE85R) [AUS] | | |
| | 1130003831 | S.IC TC7S04F(TE85R,F) [UK] | | |
| | 1130003831 | S.IC TC7S04F(TE85R,F) [RX] | | |
| | 1130003831 | S.IC TC7S04F(TE85R,F) [CHN] | | |
| IC503 | 1130003831 | S.IC TC7S04F(TE85R,F) [USA] | T | 31.7/154.1 |
| | 1130003831 | S.IC TC7S04F(TE85R,F) [EUR] | | |
| | 1130003831 | S.IC TC7S04F(TE85R,F) [FRA] | | |
| | 1130003831 | S.IC TC7S04F(TE85R,F) [DEN] | | |
| | 1130003831 | S.IC TC7S04F(TE85R,F) [ITR] | | |
| | 1130003831 | S.IC TC7S04F(TE85R,F) [KOR] | | |
| | 1130003830 | S.IC TC7S04F (TE85R) [ESP] | | |
| | 1130003830 | S.IC TC7S04F (TE85R) [AUS] | | |
| | 1130003831 | S.IC TC7S04F(TE85R,F) [UK] | | |
| | 1130003831 | S.IC TC7S04F(TE85R,F) [RX] | | |
| | 1130003831 | S.IC TC7S04F(TE85R,F) [CHN] | | |
| IC651 | 1140004550 | S.IC M65343FP/SC1287 | T | 22.6/169.2 |
| IC652 | 1130003831 | S.IC TC7S04F(TE85R,F) [USA] | T | 13.7/163.7 |
| | 1130003831 | S.IC TC7S04F(TE85R,F) [EUR] | | |
| | 1130003831 | S.IC TC7S04F(TE85R,F) [FRA] | | |
| | 1130003831 | S.IC TC7S04F(TE85R,F) [DEN] | | |
| | 1130003831 | S.IC TC7S04F(TE85R,F) [ITR] | | |
| | 1130003831 | S.IC TC7S04F(TE85R,F) [KOR] | | |
| | 1130003830 | S.IC TC7S04F (TE85R) [ESP] | | |
| | 1130003830 | S.IC TC7S04F (TE85R) [AUS] | | |
| | 1130003831 | S.IC TC7S04F(TE85R,F) [UK] | | |
| | 1130003831 | S.IC TC7S04F(TE85R,F) [RX] | | |
| | 1130003831 | S.IC TC7S04F(TE85R,F) [CHN] | | |
| IC1051 | 1190002010 | S.IC SD5400CY <TOMO> | T | 176.9/99.9 |
| IC1081 | 1110006180 | S.IC UPG2009TB-E3 | B | 151.6/85.1 |
| IC1402 | 1190002110 | S.IC NJG1519KC1-TE3-#ZZZB | T | 117.3/69.5 |
| IC1403 | 1190002110 | S.IC NJG1519KC1-TE3-#ZZZB | T | 113.4/106.3 |
| IC1501 | 1110006121 | S.IC DBM9A41-G-TR | T | 121.2/124.5 |
| IC1502 | 1110006121 | S.IC DBM9A41-G-TR | T | 121.2/133 |
| IC1503 | 1110006100 | S.IC NJM5534MD-TE1-#ZZZB | T | 138.4/151.7 |
| IC1504 | 1110006100 | S.IC NJM5534MD-TE1-#ZZZB | T | 119.2/151.7 |
| IC1505 | 1110006190 | S.IC NJM074M-TE1-#ZZZB | T | 128.8/166.9 |
| IC1506 | 1110006100 | S.IC NJM5534MD-TE1-#ZZZB | T | 128.8/175.6 |
| IC1651 | 1130011921 | S.IC TC74LCX00F(EL,F) | T | 110/126.2 |
| IC1652 | 1110005420 | S.IC BA15532F-E2 | T | 139.8/175.6 |
| IC1653 | 1110005100 | S.IC NJM072BM-TE1-#ZZZB | B | 140/172 |
| IC1701 | 1130011530 | S.IC CD74HC4094M96 | T | 158/166.7 |
| IC1702 | 1130011530 | S.IC CD74HC4094M96 | T | 148.9/166.7 |
| IC1703 | 1160000131 | S.IC TD62783AFG(5,S,EL) | T | 157.3/154.8 |
| IC1704 | 1180000790 | S.IC AN78L10M(E1) | B | 183.2/159.8 |
| Q1 | 1590001050 | S.TRA DTC114TUA T106 | B | 30.3/22.6 |
| Q30 | 1530002060 | S.TRA 2SC4081 T106 R | T | 22.3/110.9 |
| Q41 | 1590000680 | S.TRA DTC114EUA T106 | T | 12.8/34.2 |
| Q150 | 1560000331 | S.FET 2SK210-GR(TE85R,F) | T | 26.9/53 |
| Q151 | 1530002280 | S.TRA 2SC4081 T106 S | B | 33.6/57.2 |
| Q152 | 1530002280 | S.TRA 2SC4081 T106 S | B | 30.8/78.2 |
| Q201 | 1590001330 | S.TRA DTA114EUA T106 | T | 29.6/34.1 |
| Q220 | 1560000331 | S.FET 2SK210-GR(TE85R,F) | T | 72.5/33.9 |
| Q230 | 1560000331 | S.FET 2SK210-GR(TE85R,F) | T | 72.5/46.4 |
| Q240 | 1560000331 | S.FET 2SK210-GR(TE85R,F) | T | 72.5/58.9 |
| Q250 | 1560000331 | S.FET 2SK210-GR(TE85R,F) | T | 72.5/71.4 |
| Q260 | 1560000331 | S.FET 2SK210-GR(TE85R,F) | T | 72.5/83.9 |
| Q270 | 1560000331 | S.FET 2SK210-GR(TE85R,F) | T | 72.5/95.8 |
| Q280 | 1590000680 | S.TRA DTC114EUA T106 | T | 82.3/34.4 |
| Q281 | 1590000680 | S.TRA DTC114EUA T106 | T | 82.3/46.9 |
| Q282 | 1590000680 | S.TRA DTC114EUA T106 | T | 82.3/59.4 |
| Q283 | 1590000680 | S.TRA DTC114EUA T106 | T | 82.3/71.9 |
| Q284 | 1590000680 | S.TRA DTC114EUA T106 | T | 82.3/84.4 |
| Q285 | 1590000680 | S.TRA DTC114EUA T106 | T | 82.3/96.4 |
| Q301 | 1530003432 | S.TRA 2SC5226A-4-TL-E | T | 92.1/30.1 |

M.=Mounted side (T: Mounted on the Top side, B: Mounted on the Bottom side)
S.=Surface mount

## [RXPLL-B UNIT]

| REF NO. | ORDER NO. | DESCRIPTION | | M. | H/V LOCATION |
|---|---|---|---|---|---|
| Q302 | 1530003432 | S.TRA | 2SC5226A-4-TL-E | B | 89.1/42.5 |
| Q303 | 1530003432 | S.TRA | 2SC5226A-4-TL-E | B | 91.3/25.1 |
| Q341 | 1590000680 | S.TRA | DTC114EUA T106 | T | 86.3/36.7 |
| Q351 | 1580000751 | S.FET | 3SK294(TE85L,F) | T | 92.1/56.9 |
| Q352 | 1530003432 | S.TRA | 2SC5226A-4-TL-E | B | 89.2/64.5 |
| Q363 | 1590000680 | S.TRA | DTC114EUA T106 | T | 86.8/54.3 |
| Q364 | 1590001330 | S.TRA | DTA114EUA T106 | T | 86.8/57.4 |
| Q441 | 1590000680 | S.TRA | DTC114EUA T106 | T | 86.5/73.7 |
| Q502 | 1590000680 | S.TRA | DTC114EUA T106 | T | 41.9/128.8 |
| Q540 | 1530002060 | S.TRA | 2SC4081 T106 R | B | 58.7/141.2 |
| Q541 | 1560000331 | S.FET | 2SK210-GR(TE85R,F) | T | 68.9/142.8 |
| Q561 | 1530003432 | S.TRA | 2SC5226A-4-TL-E | T | 70.6/153.8 |
| Q580 | 1530003432 | S.TRA | 2SC5226A-4-TL-E | T | 41.7/147.4 |
| Q591 | 1530003151 | S.TRA | 2SC4673D-TD-E | T | 61.7/166.5 |
| Q592 | 1520000561 | S.TRA | 2SB1123 T-TD-E | B | 52/165.3 |
| Q593 | 1590000680 | S.TRA | DTC114EUA T106 | B | 54.8/171.2 |
| Q601 | 1530002601 | S.TRA | 2SC4215-O(TE85R,F) | T | 49.5/118.2 |
| Q680 | 1530002060 | S.TRA | 2SC4081 T106 R | T | 37.5/163.2 |
| Q702 | 1530002601 | S.TRA | 2SC4215-O(TE85R,F) | T | 31.4/110.9 |
| Q1001 | 1530003851 | S.TRA | 2SC5551A-F-E | B | 174/9 |
| Q1004 | 1590001960 | S.TRA | XP4311(TX) | T | 150/18.8 |
| Q1005 | 1590001960 | S.TRA | XP4311(TX) | T | 145.9/18.8 |
| Q1006 | 1530003851 | S.TRA | 2SC5551A-F-E | B | 150/37.6 |
| Q1007 | 1530003851 | S.TRA | 2SC5551A-F-E | B | 176.5/42.5 |
| Q1008 | 1530003851 | S.TRA | 2SC5551A-F-E | B | 160.5/42.5 |
| Q1101 | 1530003860 | TRA | 2SC3950D | | |
| Q1102 | 1590000680 | S.TRA | DTC114EUA T106 | T | 165.5/133.8 |
| Q1103 | 1520000561 | S.TRA | 2SB1123 T-TD-E | B | 168.6/127.8 |
| Q1104 | 1530003860 | TRA | 2SC3950D | | |
| Q1105 | 1530003842 | S.TRA | 2SC5501A-4-TR-E | T | 166.5/142.1 |
| Q1205 | 1590001960 | S.TRA | XP4311(TX) | T | 158.8/55.6 |
| Q1209 | 1530003851 | S.TRA | 2SC5551A-F-E | B | 121/34.9 |
| Q1210 | 1530003851 | S.TRA | 2SC5551A-F-E | B | 111.5/34.9 |
| Q1211 | 1560001311 | S.FET | MMBFU310LT1G | T | 159.5/96.4 |
| Q1212 | 1560001311 | S.FET | MMBFU310LT1G | T | 153.5/96.4 |
| Q1213 | 1590000680 | S.TRA | DTC114EUA T106 | B | 156.9/123.7 |
| Q1214 | 1520000561 | S.TRA | 2SB1123 T-TD-E | B | 155.4/113.5 |
| Q1301 | 1530003151 | S.TRA | 2SC4673D-TD-E | T | 157.8/120 |
| Q1352 | 1530003851 | S.TRA | 2SC5551A-F-E | B | 140/66.7 |
| Q1401 | 1530003842 | S.TRA | 2SC5501A-4-TR-E | T | 131.9/105.8 |
| Q1402 | 1530003021 | S.TRA | 2SC4402-3-TL-E | T | 123.4/111.8 |
| Q1403 | 1530003021 | S.TRA | 2SC4402-3-TL-E | T | 123.4/114.3 |
| Q1501 | 1530003450 | S.TRA | 2SC4835G R(TX) | T | 133.5/143.5 |
| Q1502 | 1530003450 | S.TRA | 2SC4835G R(TX) | T | 120.4/143.5 |
| Q1651 | 1530002601 | S.TRA | 2SC4215-O(TE85R,F) | B | 105.6/140.3 |
| Q1701 | 1590001960 | S.TRA | XP4311(TX) | T | 106.6/43.9 |
| Q1702 | 1590001960 | S.TRA | XP4311(TX) | T | 148.9/147.2 |
| Q1703 | 1590001960 | S.TRA | XP4311(TX) | T | 146.4/147.2 |
| D101 | 1750000520 | S.DIO | DAN222TL | T | 41.8/86.2 |
| D152 | 1720000590 | S.VAR | MA357(TX) | T | 17.6/59.9 |
| D153 | 1790000491 | S.DIO | HSM88ASTR-E | T | 27.2/60.4 |
| D154 | 1790000491 | S.DIO | HSM88ASTR-E | T | 27.2/63.8 |
| D201 | 1750000520 | S.DIO | DAN222TL | T | 32.4/34.1 |
| D220 | 1720000590 | S.VAR | MA357(TX) | T | 50.8/31.8 |
| D221 | 1720000590 | S.VAR | MA357(TX) | T | 52.9/31.8 |
| D222 | 1790000620 | S.DIO | MA77(TX) | T | 82.6/29.8 |
| D230 | 1720000590 | S.VAR | MA357(TX) | T | 50.8/44.2 |
| D231 | 1720000590 | S.VAR | MA357(TX) | T | 52.9/44.2 |
| D232 | 1790000620 | S.DIO | MA77(TX) | T | 82.6/42.3 |
| D240 | 1720000590 | S.VAR | MA357(TX) | T | 50.8/56.7 |
| D241 | 1720000590 | S.VAR | MA357(TX) | T | 52.9/56.7 |
| D242 | 1790000620 | S.DIO | MA77(TX) | T | 82.6/54.8 |
| D250 | 1720000590 | S.VAR | MA357(TX) | T | 50.8/69.2 |
| D252 | 1790000620 | S.DIO | MA77(TX) | T | 82.6/67.3 |
| D261 | 1720000590 | S.VAR | MA357(TX) | T | 52.9/81.7 |
| D262 | 1790000620 | S.DIO | MA77(TX) | T | 82.6/79.8 |
| D270 | 1720000590 | S.VAR | MA357(TX) | T | 50.8/94.2 |
| D271 | 1720000590 | S.VAR | MA357(TX) | T | 52.4/96.7 |
| D272 | 1790000620 | S.DIO | MA77(TX) | T | 82.5/92 |
| D341 | 1790000620 | S.DIO | MA77(TX) | T | 90/37.2 |
| D342 | 1160000070 | S.DIO | DAN202K T146 | B | 81.1/47.7 |
| D362 | 1790000620 | S.DIO | MA77(TX) | T | 88.3/65.5 |
| D363 | 1790000620 | S.DIO | MA77(TX) | T | 88.3/62 |
| D421 | 1790000620 | S.DIO | MA77(TX) | T | 91.9/85 |
| D441 | 1790000620 | S.DIO | MA77(TX) | T | 89.6/74.4 |
| D501 | 1750000520 | S.DIO | DAN222TL | T | 42/132 |
| D542 | 1720000590 | S.VAR | MA357(TX) | T | 62.5/139.6 |
| D1101 | 1790000620 | S.DIO | MA77(TX) | T | 177.6/146.6 |
| D1102 | 1790000620 | S.DIO | MA77(TX) | T | 177.6/148.4 |
| D1351 | 1750000581 | S.DIO | 1SV307(TPH3,F) | T | 140.8/71.1 |
| D1653 | 1750000550 | S.DIO | 1SS355 TE-17 | T | 138.9/167.2 |
| D1654 | 1750000550 | S.DIO | 1SS355 TE-17 | T | 142.5/167.2 |
| D1701 | 1790001670 | S.DIO | RB706F-40T106 | T | 170.5/160.8 |
| FI101 | 2020002090 | S.CER | SFECV10M7FD00-R0 (SFECV10.7MA5S) | T | 26/73.9 |
| FI1401 | 2030000321 | S.MON | DSF753SDF 64.555 MHz (FL-359A) | T | 116.3/88.5 |
| FI1402 | 2030000311 | S.MON | DSF753SDF 64.555 MHz (FL-360A) | T | 107/88.5 |
| FI1403 | 2030000520 | S.MON | DSF753SDF 64.555(FL-397) | T | 126/85.5 |
| L1 | 6200003261 | S.COI | NLV32T-101J | T | 10.8/15.4 |
| L2 | 6200003261 | S.COI | NLV32T-101J | T | 29/19.9 |
| L10 | 6200003950 | S.COI | HF50ACC 322513-T | T | 38.6/14.7 |
| L11 | 6200003950 | S.COI | HF50ACC 322513-T | T | 13.8/15.4 |
| L12 | 6200003950 | S.COI | HF50ACC 322513-T | T | 16.8/15.4 |
| L13 | 6200003950 | S.COI | HF50ACC 322513-T | T | 29/15.4 |
| L20 | 6200003321 | S.COI | NLV32T-3R3J | T | 85.9/123.8 |
| L30 | 6200005491 | S.COI | NLV32T-331J | T | 20.6/120 |

## [RXPLL-B UNIT]

| REF NO. | ORDER NO. | DESCRIPTION | | M. | H/V LOCATION |
|---|---|---|---|---|---|
| L101 | 6200001831 | S.COI | NLV32T-100J | T | 38.3/72.8 |
| L151 | 6130002970 | COI | LB-343 | | |
| L152 | 6200001831 | S.COI | NLV32T-100J | T | 30/54.5 |
| L201 | 6200005011 | S.COI | NLV25T-100J | T | 22.2/45 |
| L211 | 6200003661 | S.COI | NLV25T-R68J | B | 45.4/35.3 |
| L220 | 6200010790 | S.COI | C2520C-3R9G-A | T | 51.9/37.5 |
| L221 | 6190001421 | COI | #E526GN-110502 | | |
| L222 | 6200010790 | S.COI | C2520C-3R9G-A | T | 76.2/37.7 |
| L230 | 6200010830 | S.COI | C2520C-3R3G-A | T | 51.9/50 |
| L231 | 6190001421 | COI | #E526GN-110502 | | |
| L232 | 6200010830 | S.COI | C2520C-3R3G-A | T | 76.2/50.2 |
| L240 | 6200010830 | S.COI | C2520C-3R3G-A | T | 51.9/62.4 |
| L241 | 6190001421 | COI | #E526GN-110502 | | |
| L242 | 6200010830 | S.COI | C2520C-3R3G-A | T | 76.2/62.7 |
| L250 | 6200010820 | S.COI | C2520C-2R7G-A | T | 51.9/74.9 |
| L251 | 6190001421 | COI | #E526GN-110502 | | |
| L252 | 6200010820 | S.COI | C2520C-2R7G-A | T | 76.2/75.2 |
| L260 | 6200010820 | S.COI | C2520C-2R7G-A | T | 51.9/87.4 |
| L261 | 6190001411 | COI | #E526GN-110501 | | |
| L262 | 6200010820 | S.COI | C2520C-2R7G-A | T | 76.2/87.7 |
| L270 | 6200010810 | S.COI | C2520C-2R2G-A | T | 51.9/99.8 |
| L271 | 6190001411 | COI | #E526GN-110501 | | |
| L272 | 6200010810 | S.COI | C2520C-2R2G-A | T | 76/100.2 |
| L280 | 6200005011 | S.COI | NLV25T-100J | T | 67.4/25.5 |
| L302 | 6200001831 | S.COI | NLV32T-100J | T | 89.3/42.6 |
| L331 | 6200002641 | S.COI | NLV25T-R15J | T | 95.1/34.1 |
| L332 | 6200002411 | S.COI | NLV25T-056J | B | 93.2/36 |
| L341 | 6200003261 | S.COI | NLV32T-101J | T | 87/39.6 |
| L351 | 6200001831 | S.COI | NLV32T-100J | T | 91.3/62 |
| L421 | 6200008641 | S.COI | NLV32T-391J | T | 87/81 |
| L441 | 6200002601 | S.COI | NLV25T-047J | T | 91.9/72.3 |
| L442 | 6200010730 | S.COI | C2520C-68NG-A | T | 90.5/78.2 |
| L451 | 6200002641 | S.COI | NLV25T-R15J | T | 95/81 |
| L452 | 6200003261 | S.COI | NLV32T-101J | T | 87/78 |
| L501 | 6200001831 | S.COI | NLV32T-100J | T | 31/125.8 |
| L530 | 6200003171 | S.COI | NLV32T-330J | T | 14.6/134.9 |
| L531 | 6200003171 | S.COI | NLV32T-330J | T | 14.6/130.8 |
| L532 | 6200003171 | S.COI | NLV32T-330J | T | 15.5/127.1 |
| L541 | 6200010790 | S.COI | C2520C-3R9G-A | T | 56.3/139.6 |
| L542 | 6190001421 | COI | #E526GN-110502 | | |
| L543 | 6200010790 | S.COI | C2520C-3R9G-A | T | 68.4/147.9 |
| L544 | 6200003261 | S.COI | NLV32T-101J | B | 65.9/142.1 |
| L545 | 6200003261 | S.COI | NLV32T-101J | B | 51.3/139.6 |
| L561 | 6200003261 | S.COI | NLV32T-101J | B | 64/156 |
| L562 | 6200001831 | S.COI | NLV32T-100J | B | 74.6/151.8 |
| L565 | 6150004250 | COI | LS-471A (C-14922) | | |
| L566 | 6150004250 | COI | LS-471A (C-14922) | | |
| L591 | 6200007790 | S.COI | LQW2BHNR15J03L | T | 60.5/171.5 |
| L601 | 6200001831 | S.COI | NLV32T-100J | T | 49.5/123.6 |
| L602 | 6200002641 | S.COI | NLV25T-R15J | T | 54.1/118 |
| L603 | 6200002841 | S.COI | NLV25T-R22J | T | 57.1/117.2 |
| L651 | 6200001831 | S.COI | NLV32T-100J | T | 15.5/176.3 |
| L681 | 6200002981 | S.COI | NLV32T-R56J | T | 37.4/176.2 |
| L682 | 6200003041 | S.COI | NLV32T-R68J | T | 37.8/172.6 |
| L683 | 6200003051 | S.COI | NLV32T-R82J | T | 40.2/166.2 |
| L701 | 6200003261 | S.COI | NLV32T-101J | T | 23.6/120 |
| L702 | 6150004971 | S.COI | LS-522-LF | T | 37.6/108.6 |
| L703 | 6150004971 | S.COI | LS-522-LF | T | 37.5/118.5 |
| L1001 | 6190001650 | COI | ELC06D102E | | |
| L1002 | 6140004400 | COI | LR-499 | | |
| L1004 | 6140003890 | COI | LR-488 | | |
| L1005 | 6180001000 | COI | LAL 04NA 102K | | |
| L1006 | 6140003900 | COI | LR-489 | | |
| L1007 | 6140003800 | COI | LR-439 | | |
| L1008 | 6190001650 | COI | ELC06D102E | | |
| L1009 | 6190001650 | COI | ELC06D102E | | |
| L1010 | 6140003880 | COI | LR-486 | | |
| L1011 | 6140003880 | COI | LR-486 | | |
| L1012 | 6140003800 | COI | LR-439 | | |
| L1013 | 6200010680 | S.COI | C2520C-R22G-A (0.22U) | T | 155/55.2 |
| L1014 | 6200010680 | S.COI | C2520C-R22G-A (0.22U) | T | 157.9/12.4 |
| L1015 | 6200007790 | S.COI | LQW2BHNR15J03L | B | 163.5/27.5 |
| L1052 | 6200010740 | S.COI | C2520C-R27G-A | T | 177.8/74.6 |
| L1053 | 6200010740 | S.COI | C2520C-R27G-A | T | 173.8/73.5 |
| L1054 | 6200010740 | S.COI | C2520C-R27G-A | T | 169.4/72.6 |
| L1055 | 6140003960 | COI | LR-495 | | |
| L1056 | 6200010730 | S.COI | C2520C-68NG-A | T | 171/83.8 |
| L1058 | 6190001631 | COI | #E544EN-100021 | | |
| L1060 | 6200010730 | S.COI | C2520C-68NG-A | T | 149.1/76.4 |
| L1062 | 6200011450 | S.COI | C2520C-R39G-A | T | 145.1/81.4 |
| L1063 | 6200010650 | S.COI | C2520C-R12G-A (0.12U) | T | 140.9/82.5 |
| L1071 | 6200007780 | S.COI | LQW2BHNR12J03L | B | 164.9/79.2 |
| L1072 | 6200007780 | S.COI | LQW2BHNR12J03L | B | 168/76.1 |
| L1091 | 6200003950 | S.COI | HF50ACC 322513-T | B | 171/149 |
| L1092 | 6200003950 | S.COI | HF50ACC 322513-T | T | 149.7/136.5 |
| L1093 | 6200003950 | S.COI | HF50ACC 322513-T | T | 157/135.2 |
| L1101 | 6140003920 | COI | LR-491 | | |
| L1102 | 6200010650 | S.COI | C2520C-R12G-A (0.12U) | T | 176.9/117.9 |
| L1103 | 6180001250 | COI | LAL 04NA 3R3K | | |
| L1104 | 6200010870 | S.COI | C2520C-R33G-A (0.33U) | T | 178.3/135.9 |
| L1105 | 6140003910 | COI | LR-490 | | |
| L1151 | 6140004640 | COI | LR-519 | | |
| L1201 | 6200007780 | S.COI | LQW2BHNR12J03L | B | 119.3/17.4 |
| L1208 | 6140003800 | COI | LR-439 | | |
| L1209 | 6200001831 | S.COI | NLV32T-100J | T | 121.1/20.8 |
| L1210 | 6140004440 | COI | LR-503 | | |
| L1211 | 6200009690 | S.COI | LQH43CN101K03L | T | 115.7/34.6 |
| L1212 | 6200001831 | S.COI | NLV32T-100J | T | 106.8/20.8 |
| L1213 | 6140004440 | COI | LR-503 | | |
| L1214 | 6200009690 | S.COI | LQH43CN101K03L | T | 105.9/34.8 |
| L1216 | 6140003800 | COI | LR-439 | | |
| L1217 | 6200007750 | S.COI | LQW2BHN56NJ03L | T | 147.9/63.7 |
| L1218 | 6200007770 | S.COI | LQW2BHNR10J03L | T | 153.3/65.1 |
| L1219 | 6200007790 | S.COI | LQW2BHNR15J03L | T | 153.2/68.4 |

M.=Mounted side (T: Mounted on the Top side, B: Mounted on the Bottom side)
S.=Surface mount

## [RXPLL-B UNIT]

| REF NO. | ORDER NO. | DESCRIPTION | | M. | H/V LOCATION |
|---|---|---|---|---|---|
| L1220 | 6140000930 | COI | LR-116 | | |
| L1221 | 6200003261 | S.COI | NLV32T-101J | B | 149.5/110.9 |
| L1222 | 6150001770 | COI | LS-198 | | |
| L1223 | 6200007750 | S.COI | LQW2BHN56NJ03L | B | 151.3/100.7 |
| L1228 | 6200010870 | S.COI | C2520C-R33G-A (0.33U) | T | 158.7/71.3 |
| L1229 | 6200003950 | S.COI | HF50ACC 322513-T | B | 164.7/115 |
| L1301 | 6200008090 | S.COI | LQW2BHN68NJ03L | T | 157.1/111.9 |
| L1302 | 6200008090 | S.COI | LQW2BHN68NJ03L | T | 156.4/115.5 |
| L1303 | 6200008090 | S.COI | LQW2BHN68NJ03L | T | 153.4/117.5 |
| L1304 | 6200010870 | S.COI | C2520C-R33G-A (0.33U) | T | 153.8/123 |
| L1305 | 6200003001 | S.COI | NLV32T-R22J | T | 159.2/124.5 |
| L1306 | 6200001831 | S.COI | NLV32T-100J | B | 152.7/118.6 |
| L1307 | 6200003001 | S.COI | NLV32T-R22J | T | 153.3/112 |
| L1351 | 6200001831 | S.COI | NLV32T-100J | T | 143/76.4 |
| L1353 | 6200010740 | S.COI | C2520C-R27G-A | T | 141.6/67.5 |
| L1354 | 6200001831 | S.COI | NLV32T-100J | T | 136.4/68 |
| L1401 | 6150004280 | COI | LS-484B (C-14927) | | |
| L1402 | 6150004280 | COI | LS-484B (C-14927) | | |
| L1403 | 6150004280 | COI | LS-484B (C-14927) | | |
| L1404 | 6150004280 | COI | LS-484B (C-14927) | | |
| L1405 | 6200007770 | S.COI | LQW2BHNR10J03L | B | 112.5/111.4 |
| L1406 | 6200007750 | S.COI | LQW2BHN56NJ03L | B | 116.6/111.4 |
| L1407 | 6140003930 | COI | LR-492 | | |
| L1408 | 6190001621 | COI | #E544EN-100028 | | |
| L1409 | 6200003191 | S.COI | NLV32T-470J | B | 135.8/125.4 |
| L1410 | 6150004280 | COI | LS-484B (C-14927) | | |
| L1411 | 6150004280 | COI | LS-484B (C-14927) | | |
| L1501 | 6200003520 | S.COI | ELJFB 102K-F | T | 142.1/145.1 |
| L1652 | 6200002520 | S.COI | ELJNC R18K-F | T | 112.9/133.1 |
| L1653 | 6200001831 | S.COI | NLV32T-100J | B | 105.4/124.6 |
| L1654 | 6200001831 | S.COI | NLV32T-100J | B | 112.4/141.9 |
| L1655 | 6200001831 | S.COI | NLV32T-100J | B | 124.7/139.8 |
| L1701 | 6200001831 | S.COI | NLV32T-100J | T | 167/160 |
| L1702 | 6200003950 | S.COI | HF50ACC 322513-T | T | 175.6/169.8 |
| L1703 | 6200003950 | S.COI | HF50ACC 322513-T | T | 172.6/169.8 |
| L1704 | 6200003950 | S.COI | HF50ACC 322513-T | T | 169.6/169.8 |
| L1705 | 6200003950 | S.COI | HF50ACC 322513-T | T | 165.5/169.8 |
| L1803 | 6200003950 | S.COI | HF50ACC 322513-T | B | 132/54.8 |
| L1804 | 6200003950 | S.COI | HF50ACC 322513-T | B | 118/154.8 |
| L1805 | 6200003950 | S.COI | HF50ACC 322513-T | B | 155.2/132 |
| L1807 | 6200003950 | S.COI | HF50ACC 322513-T | B | 118/151.3 |
| L1808 | 6200003950 | S.COI | HF50ACC 322513-T | B | 141.3/162 |
| L1809 | 6200003950 | S.COI | HF50ACC 322513-T | B | 149.5/115.6 |
| | | | | | |
| R1 | 7030005871 | S.RES | ERA3YKD 104V (100K) | T | 32.5/19.2 |
| R2 | 7030005321 | S.RES | ERA3YED 103V (10K) | T | 31.2/19.2 |
| R3 | 7030003550 | S.RES | ERJ3GEYJ 822 V (8.2K) | T | 16.9/23.5 |
| R4 | 7030003550 | S.RES | ERJ3GEYJ 822 V (8.2K) | T | 16.9/24.8 |
| R5 | 7030003550 | S.RES | ERJ3GEYJ 822 V (8.2K) | T | 13.3/31.3 |
| R6 | 7030003550 | S.RES | ERJ3GEYJ 822 V (8.2K) | T | 13.3/30 |
| R7 | 7030003500 | S.RES | ERJ3GEYJ 332 V (3.3K) | B | 26.7/12.9 |
| R8 | 7030003470 | S.RES | ERJ3GEYJ 182 V (1.8K) | B | 28.2/14.6 |
| R9 | 7030003680 | S.RES | ERJ3GEYJ 104 V (100K) | B | 27.5/10.6 |
| R10 | 7030003360 | S.RES | ERJ3GEYJ 221 V (220) | T | 19/16 |
| R11 | 7030003360 | S.RES | ERJ3GEYJ 221 V (220) | T | 20.3/16 |
| R12 | 7030003360 | S.RES | ERJ3GEYJ 221 V (220) | T | 22.4/16 |
| R13 | 7030003360 | S.RES | ERJ3GEYJ 221 V (220) | T | 23.7/16 |
| R14 | 7030003360 | S.RES | ERJ3GEYJ 221 V (220) | T | 25/16 |
| R15 | 7030003360 | S.RES | ERJ3GEYJ 221 V (220) | T | 26.4/16.2 |
| R16 | 7030003360 | S.RES | ERJ3GEYJ 221 V (220) | T | 32.5/15.4 |
| R17 | 7030003360 | S.RES | ERJ3GEYJ 221 V (220) | T | 33.8/15.4 |
| R30 | 7030003240 | S.RES | ERJ3GEYJ 220 V (22) | T | 21.7/113.7 |
| R31 | 7030003600 | S.RES | ERJ3GEYJ 223 V (22K) | T | 20.4/111.1 |
| R32 | 7030003320 | S.RES | ERJ3GEYJ 101 V (100) | T | 23/113.7 |
| R33 | 7030003340 | S.RES | ERJ3GEYJ 151 V (150) | T | 19.1/115 |
| R51 | 7030011030 | S.RES | ERJ1TYJ 270U (27) | T | 66.3/13.9 |
| R61 | 7030011030 | S.RES | ERJ1TYJ 270U (27) | T | 45.1/13.9 |
| R101 | 7030003800 | S.RES | ERJ3GEYJ 105 V (1M) | T | 34.1/101.5 |
| R102 | 7030003860 | S.RES | ERJ3GE JPW V | B | 35.6/88.6 |
| R103 | 7030007230 | S.RES | ERA3YED 102V (1K) | T | 25.1/100.3 |
| R104 | 7030007230 | S.RES | ERA3YED 102V (1K) | T | 26.4/100.3 |
| R105 | 7030007230 | S.RES | ERA3YED 102V (1K) | T | 27.8/100.3 |
| R106 | 7030003360 | S.RES | ERJ3GEYJ 221 V (220) | T | 29.1/100.3 |
| R107 | 7030003320 | S.RES | ERJ3GEYJ 101 V (100) | T | 38/101.5 |
| R108 | 7030007230 | S.RES | ERA3YED 102V (1K) | T | 28.9/79 |
| R109 | 7030007230 | S.RES | ERA3YED 102V (1K) | T | 41.9/84.5 |
| R110 | 7030007220 | S.RES | ERA3YED 202V (2K) | T | 14.6/100.5 |
| R111 | 7030007220 | S.RES | ERA3YED 202V (2K) | T | 17.2/100.5 |
| R112 | 7030007220 | S.RES | ERA3YED 202V (2K) | T | 17.2/99.2 |
| R113 | 7030007220 | S.RES | ERA3YED 202V (2K) | T | 17.2/97.9 |
| R114 | 7030007220 | S.RES | ERA3YED 202V (2K) | T | 17.2/96.6 |
| R115 | 7030007220 | S.RES | ERA3YED 202V (2K) | T | 17.2/95.2 |
| R116 | 7030007220 | S.RES | ERA3YED 202V (2K) | T | 17.2/93.9 |
| R117 | 7030007220 | S.RES | ERA3YED 202V (2K) | T | 17.2/92.6 |
| R118 | 7030007200 | S.RES | ERA3YEB 202V (2K) | T | 17.2/91.3 |
| R119 | 7030007200 | S.RES | ERA3YEB 202V (2K) | T | 17.2/89.6 |
| R120 | 7030007200 | S.RES | ERA3YEB 202V (2K) | T | 17.2/87 |
| R121 | 7030007200 | S.RES | ERA3YEB 202V (2K) | T | 17.2/84.4 |
| R122 | 7030007200 | S.RES | ERA3YEB 202V (2K) | T | 17.2/81.8 |
| R123 | 7030007230 | S.RES | ERA3YED 102V (1K) | T | 14.6/99.2 |
| R124 | 7030007230 | S.RES | ERA3YED 102V (1K) | T | 14.6/97.9 |
| R125 | 7030007230 | S.RES | ERA3YED 102V (1K) | T | 14.6/96.6 |
| R126 | 7030007230 | S.RES | ERA3YED 102V (1K) | T | 14.6/95.2 |
| R127 | 7030007230 | S.RES | ERA3YED 102V (1K) | T | 14.6/93.9 |
| R128 | 7030007230 | S.RES | ERA3YED 102V (1K) | T | 14.6/92.6 |
| R129 | 7030007210 | S.RES | ERA3YEB 102V (1K) | T | 14.6/91.3 |
| R130 | 7030007210 | S.RES | ERA3YEB 102V (1K) | T | 14.6/89.6 |
| R131 | 7030007210 | S.RES | ERA3YEB 102V (1K) | T | 14.6/88.3 |
| R132 | 7030007210 | S.RES | ERA3YEB 102V (1K) | T | 14.6/87 |
| R133 | 7030007210 | S.RES | ERA3YEB 102V (1K) | T | 14.6/85.7 |
| R134 | 7030009861 | S.RES | ERA3YED 471V (470) | T | 14.6/84.4 |
| R135 | 7030003860 | S.RES | ERJ3GE JPW V | T | 30.4/75.8 |
| R136 | 7030003800 | S.RES | ERJ3GEYJ 105 V (1M) | T | 33/77.1 |

## [RXPLL-B UNIT]

| REF NO. | ORDER NO. | DESCRIPTION | | M. | H/V LOCATION |
|---|---|---|---|---|---|
| R137 | 7030003200 | S.RES | ERJ3GEYJ 100 V (10) | T | 35.5/75.8 |
| R138 | 7030003860 | S.RES | ERJ3GE JPW V | T | 16.8/78.6 |
| R139 | 7030003860 | S.RES | ERJ3GE JPW V | T | 17.6/75.8 |
| R150 | 7030003330 | S.RES | ERJ3GEYJ 121 V (120) | B | 37.8/86.2 |
| R151 | 7030003220 | S.RES | ERJ3GEYJ 150 V (15) | B | 38.6/88.1 |
| R152 | 7030005871 | S.RES | ERA3YKD 104V (100K) | B | 36.2/82.5 |
| R153 | 7030005321 | S.RES | ERA3YED 103V (10K) | T | 19.2/62.7 |
| R154 | 7030003320 | S.RES | ERJ3GEYJ 101 V (100) | B | 26.3/54.1 |
| R155 | 7030003350 | S.RES | ERJ3GEYJ 181 V (180) | B | 23/54.1 |
| R156 | 7030005871 | S.RES | ERA3YKD 104V (100K) | T | 24.6/53.1 |
| R157 | 7030005871 | S.RES | ERA3YKD 104V (100K) | T | 26.9/58 |
| R158 | 7030003340 | S.RES | ERJ3GEYJ 151 V (150) | T | 30/57.3 |
| R159 | 7030003320 | S.RES | ERJ3GEYJ 101 V (100) | B | 33.6/61.4 |
| R160 | 7030003360 | S.RES | ERJ3GEYJ 221 V (220) | B | 33.6/59.6 |
| R161 | 7030003640 | S.RES | ERJ3GEYJ 473 V (47K) | B | 33.6/54.8 |
| R163 | 7030003220 | S.RES | ERJ3GEYJ 150 V (15) | B | 30.2/56.6 |
| R164 | 7030003310 | S.RES | ERJ3GEYJ 820 V (82) | B | 34.1/70.4 |
| R165 | 7030003320 | S.RES | ERJ3GEYJ 101 V (100) | B | 30.8/70.4 |
| R166 | 7030003320 | S.RES | ERJ3GEYJ 101 V (100) | B | 30.8/72.2 |
| R167 | 7030003240 | S.RES | ERJ3GEYJ 220 V (22) | B | 37.4/75.8 |
| R168 | 7030003360 | S.RES | ERJ3GEYJ 221 V (220) | B | 34.1/75.8 |
| R169 | 7030003640 | S.RES | ERJ3GEYJ 473 V (47K) | B | 30.8/75.8 |
| R202 | 7030007230 | S.RES | ERA3YED 102V (1K) | T | 22.2/39.7 |
| R203 | 7030007230 | S.RES | ERA3YED 102V (1K) | T | 22.2/38.4 |
| R204 | 7030003360 | S.RES | ERJ3GEYJ 221 V (220) | T | 22.2/37.1 |
| R205 | 7030005321 | S.RES | ERA3YED 103V (10K) | T | 27.4/34 |
| R206 | 7030003220 | S.RES | ERJ3GEYJ 150 V (15) | T | 31.1/45.7 |
| R210 | 7030005351 | S.RES | ERA3YED 182V (1.8K) | T | 35.6/37.5 |
| R217 | 7030009651 | S.RES | ERA3YHD 820V (82) | B | 40.4/42.8 |
| R219 | 7030009691 | S.RES | ERA3YED 101V (100) | B | 40/35.7 |
| R220 | 7030005871 | S.RES | ERA3YKD 104V (100K) | T | 73.2/37.6 |
| R221 | 7030005871 | S.RES | ERA3YKD 104V (100K) | T | 72.3/30.9 |
| R222 | 7030003400 | S.RES | ERJ3GEYJ 471 V (470) | T | 81.4/38.3 |
| R223 | 7030007230 | S.RES | ERA3YED 102V (1K) | T | 81.9/31.9 |
| R224 | 7030003320 | S.RES | ERJ3GEYJ 101 V (100) | T | 73.2/40.2 |
| R230 | 7030005871 | S.RES | ERA3YKD 104V (100K) | T | 73.2/50.1 |
| R231 | 7030005871 | S.RES | ERA3YKD 104V (100K) | T | 72.3/43.3 |
| R232 | 7030003360 | S.RES | ERJ3GEYJ 221 V (220) | T | 81.4/50.8 |
| R233 | 7030007230 | S.RES | ERA3YED 102V (1K) | T | 81.9/44.4 |
| R234 | 7030003320 | S.RES | ERJ3GEYJ 101 V (100) | T | 73.2/52.7 |
| R240 | 7030005871 | S.RES | ERA3YKD 104V (100K) | T | 73.2/62.6 |
| R241 | 7030005871 | S.RES | ERA3YKD 104V (100K) | T | 72.3/55.8 |
| R242 | 7030003360 | S.RES | ERJ3GEYJ 221 V (220) | T | 81.4/63.3 |
| R243 | 7030007230 | S.RES | ERA3YED 102V (1K) | T | 81.9/56.9 |
| R244 | 7030003320 | S.RES | ERJ3GEYJ 101 V (100) | T | 73.2/65.2 |
| R250 | 7030005871 | S.RES | ERA3YKD 104V (100K) | T | 73.2/75.1 |
| R251 | 7030005871 | S.RES | ERA3YKD 104V (100K) | T | 72.3/68.4 |
| R252 | 7030003360 | S.RES | ERJ3GEYJ 221 V (220) | T | 81.4/75.8 |
| R253 | 7030007230 | S.RES | ERA3YED 102V (1K) | T | 81.9/69.4 |
| R254 | 7030003320 | S.RES | ERJ3GEYJ 101 V (100) | T | 73.2/77.7 |
| R260 | 7030005871 | S.RES | ERA3YKD 104V (100K) | T | 73.2/87.6 |
| R261 | 7030005871 | S.RES | ERA3YKD 104V (100K) | T | 72.3/80.9 |
| R262 | 7030003400 | S.RES | ERJ3GEYJ 471 V (470) | T | 81.4/88.3 |
| R263 | 7030007230 | S.RES | ERA3YED 102V (1K) | T | 81.9/81.9 |
| R264 | 7030003320 | S.RES | ERJ3GEYJ 101 V (100) | T | 73.2/90.2 |
| R270 | 7030005871 | S.RES | ERA3YKD 104V (100K) | T | 73.2/99.5 |
| R271 | 7030005871 | S.RES | ERA3YKD 104V (100K) | T | 72.3/92.8 |
| R272 | 7030003360 | S.RES | ERJ3GEYJ 221 V (220) | T | 81.4/100.8 |
| R273 | 7030007230 | S.RES | ERA3YED 102V (1K) | T | 81.9/93.9 |
| R274 | 7030003320 | S.RES | ERJ3GEYJ 101 V (100) | T | 73.2/102.1 |
| R301 | 7030003200 | S.RES | ERJ3GEYJ 100 V (10) | T | 86.5/30.6 |
| R302 | 7030007230 | S.RES | ERA3YED 102V (1K) | T | 86.5/29.3 |
| R303 | 7030003360 | S.RES | ERJ3GEYJ 221 V (220) | T | 92.1/28 |
| R304 | 7030003490 | S.RES | ERJ3GEYJ 272 V (2.7K) | T | 94/30.1 |
| R305 | 7030003510 | S.RES | ERJ3GEYJ 392 V (3.9K) | T | 95.3/30.1 |
| R306 | 7030003360 | S.RES | ERJ3GEYJ 221 V (220) | T | 94.7/32.2 |
| R307 | 7030009841 | S.RES | ERA3YHD 330V (33) | T | 92.1/32.2 |
| R308 | 7030009851 | S.RES | ERA3YED 271V (270) | B | 92.6/43.4 |
| R309 | 7030003540 | S.RES | ERJ3GEYJ 682 V (6.8K) | B | 89.1/47 |
| R310 | 7030003500 | S.RES | ERJ3GEYJ 332 V (3.3K) | B | 92.6/47 |
| R311 | 7030003350 | S.RES | ERJ3GEYJ 181 V (180) | B | 89.1/45.2 |
| R312 | 7030003360 | S.RES | ERJ3GEYJ 221 V (220) | B | 92.4/27.8 |
| R313 | 7030003490 | S.RES | ERJ3GEYJ 272 V (2.7K) | B | 91.1/23.1 |
| R314 | 7030003510 | S.RES | ERJ3GEYJ 392 V (3.9K) | B | 88.3/23.1 |
| R315 | 7030003360 | S.RES | ERJ3GEYJ 221 V (220) | B | 87.5/25.1 |
| R316 | 7030003280 | S.RES | ERJ3GEYJ 470 V (47) | B | 78.3/26.1 |
| R317 | 7030006220 | S.RES | ERJ12YJ470U (47) | B | 90/31.4 |
| R318 | 7030009841 | S.RES | ERA3YHD 330V (33) | B | 92.6/41.6 |
| R341 | 7030007230 | S.RES | ERA3YED 102V (1K) | T | 92.1/40.1 |
| R342 | 7030005321 | S.RES | ERA3YED 103V (10K) | T | 86.5/32.2 |
| R343 | 7030007230 | S.RES | ERA3YED 102V (1K) | T | 89.3/34.8 |
| R351 | 7030003200 | S.RES | ERJ3GEYJ 100 V (10) | B | 89.1/52.4 |
| R352 | 7030010980 | S.RES | ERA3YHD 470V (47) | T | 89.3/55.8 |
| R353 | 7030009591 | S.RES | ERA3YED 472V (4.7K) | T | 89.3/54.5 |
| R354 | 7030009591 | S.RES | ERA3YED 472V (4.7K) | T | 89.3/50.4 |
| R355 | 7030009591 | S.RES | ERA3YED 472V (4.7K) | T | 89.3/53.2 |
| R356 | 7030003320 | S.RES | ERJ3GEYJ 101 V (100) | T | 89.3/57.1 |
| R357 | 7310005580 | S.TRI | TMC3ADCS3X (4.7K) | T | 93.6/52.7 |
| R358 | 7030010980 | S.RES | ERA3YHD 470V (47) | T | 94.9/56.4 |
| R359 | 7030003320 | S.RES | ERJ3GEYJ 101 V (100) | T | 94.9/59 |
| R360 | 7030003320 | S.RES | ERJ3GEYJ 101 V (100) | B | 92.6/63.9 |
| R361 | 7030003490 | S.RES | ERJ3GEYJ 272 V (2.7K) | B | 89.2/62.1 |
| R362 | 7030003510 | S.RES | ERJ3GEYJ 392 V (3.9K) | B | 92.6/60.3 |
| R363 | 7030003320 | S.RES | ERJ3GEYJ 101 V (100) | B | 92.6/65.7 |
| R364 | 7030003410 | S.RES | ERJ3GEYJ 561 V (560) | T | 94.9/82.9 |
| R365 | 7030007860 | S.RES | ERJ3GEYJ 8R2V (8.2) | T | 92/83.4 |
| R366 | 7030003410 | S.RES | ERJ3GEYJ 561 V (560) | T | 94.9/84.2 |
| R368 | 7030005321 | S.RES | ERA3YED 103V (10K) | T | 86.1/59.6 |
| R369 | 7030008240 | S.RES | ERJ12Y0R00U | B | 95.3/57.1 |
| R421 | 7030007230 | S.RES | ERA3YED 102V (1K) | T | 92.1/87.8 |
| R425 | 7030003410 | S.RES | ERJ3GEYJ 561 V (560) | T | 90.1/81.6 |
| R427 | 7030003320 | S.RES | ERJ3GEYJ 101 V (100) | B | 86.8/87.3 |
| R428 | 7030009861 | S.RES | ERA3YED 471V (470) | B | 92.1/88 |
| R441 | 7030007230 | S.RES | ERA3YED 102V (1K) | T | 92.1/75.5 |

M.=Mounted side (T: Mounted on the Top side, B: Mounted on the Bottom side)
S.=Surface mount

## [RXPLL-B UNIT]

| REF NO. | ORDER NO. | DESCRIPTION | M. | H/V LOCATION |
|---|---|---|---|---|
| R442 | 7030005321 | S.RES ERA3YED 103V (10K) | T | 88.9/70.9 |
| R443 | 7030007230 | S.RES ERA3YED 102V (1K) | T | 88.9/72.2 |
| R501 | 7030003360 | S.RES ERJ3GEYJ 221 V (220) | T | 29.2/153.1 |
| R502 | 7030007230 | S.RES ERA3YED 102V (1K) | T | 27.9/153.1 |
| R503 | 7030007230 | S.RES ERA3YED 102V (1K) | T | 26.5/153.1 |
| R504 | 7030007230 | S.RES ERA3YED 102V (1K) | T | 25.2/153.1 |
| R506 | 7030003800 | S.RES ERJ3GEYJ 105 V (1M) | T | 34/154.5 |
| R509 | 7030003440 | S.RES ERJ3GEYJ 102 V (1K) [USA] | T | 42.5/136 |
| | 7030003440 | S.RES ERJ3GEYJ 102 V (1K) [EUR] | | |
| | 7030003440 | S.RES ERJ3GEYJ 102 V (1K) [FRA] | | |
| | 7030003440 | S.RES ERJ3GEYJ 102 V (1K) [DEN] | | |
| | 7030003440 | S.RES ERJ3GEYJ 102 V (1K) [ITR] | | |
| | 7030003440 | S.RES ERJ3GEYJ 102 V (1K) [KOR] | | |
| | 7030003440 | S.RES ERJ3GEYJ 102 V (1K) [ESP] | | |
| | 7030003440 | S.RES ERJ3GEYJ 102 V (1K) [AUS] | | |
| | 7030003440 | S.RES ERJ3GEYJ 102 V (1K) [UK] | | |
| | 7030003440 | S.RES ERJ3GEYJ 102 V (1K) [RX] | | |
| | 7030007230 | S.RES ERA3YED 102V (1K) [CHN] | | |
| R510 | 7030007220 | S.RES ERA3YED 202V (2K) | T | 14.6/153.6 |
| R511 | 7030007220 | S.RES ERA3YED 202V (2K) | T | 17.2/153.6 |
| R512 | 7030007220 | S.RES ERA3YED 202V (2K) | T | 17.2/152.3 |
| R513 | 7030007220 | S.RES ERA3YED 202V (2K) | T | 17.2/151 |
| R514 | 7030007220 | S.RES ERA3YED 202V (2K) | T | 17.2/149.7 |
| R515 | 7030007220 | S.RES ERA3YED 202V (2K) | T | 17.2/148.3 |
| R516 | 7030007220 | S.RES ERA3YED 202V (2K) | T | 17.2/147 |
| R517 | 7030007220 | S.RES ERA3YED 202V (2K) | T | 17.2/145.7 |
| R518 | 7030007200 | S.RES ERA3YEB 202V (2K) | T | 17.2/144.4 |
| R519 | 7030007200 | S.RES ERA3YEB 202V (2K) | T | 17.2/142.7 |
| R520 | 7030007200 | S.RES ERA3YEB 202V (2K) | T | 17.2/141.4 |
| R521 | 7030007200 | S.RES ERA3YEB 202V (2K) | T | 17.2/140.1 |
| R522 | 7030007200 | S.RES ERA3YEB 202V (2K) | T | 17.2/138.8 |
| R523 | 7030007230 | S.RES ERA3YED 102V (1K) | T | 14.6/152.3 |
| R524 | 7030007230 | S.RES ERA3YED 102V (1K) | T | 14.6/151 |
| R525 | 7030007230 | S.RES ERA3YED 102V (1K) | T | 14.6/149.7 |
| R526 | 7030007230 | S.RES ERA3YED 102V (1K) | T | 14.6/148.3 |
| R527 | 7030007230 | S.RES ERA3YED 102V (1K) | T | 14.6/147 |
| R528 | 7030007230 | S.RES ERA3YED 102V (1K) | T | 14.6/145.7 |
| R529 | 7030007210 | S.RES ERA3YEB 102V (1K) | T | 14.6/144.4 |
| R530 | 7030007210 | S.RES ERA3YEB 102V (1K) | T | 14.6/142.7 |
| R531 | 7030007210 | S.RES ERA3YEB 102V (1K) | T | 14.6/141.4 |
| R532 | 7030007210 | S.RES ERA3YEB 102V (1K) | T | 14.6/140.1 |
| R533 | 7030007210 | S.RES ERA3YEB 102V (1K) | T | 14.6/138.8 |
| R534 | 7030003860 | S.RES ERJ3GE JPW V | T | 22.2/127.6 |
| R535 | 7030003800 | S.RES ERJ3GEYJ 105 V (1M) | T | 24.8/129.8 |
| R536 | 7030003200 | S.RES ERJ3GEYJ 100 V (10) | T | 28/128.3 |
| R537 | 7030007230 | S.RES ERA3YED 102V (1K) | T | 30.3/131.9 |
| R538 | 7030003360 | S.RES ERJ3GEYJ 221 V (220) | B | 34.8/146.5 |
| R540 | 7030007230 | S.RES ERA3YED 102V (1K) | B | 52.3/142.8 |
| R544 | 7030005871 | S.RES ERA3YKD 104V (100K) | T | 69.4/140.4 |
| R545 | 7030005871 | S.RES ERA3YKD 104V (100K) | T | 69.4/139.1 |
| R546 | 7030009861 | S.RES ERA3YED 471V (470) | T | 67.4/150.7 |
| R548 | 7030009591 | S.RES ERA3YED 472V (4.7K) | B | 43.4/136.5 |
| R550 | 7030009691 | S.RES ERA3YED 101V (100) | B | 43.4/134.7 |
| R554 | 7030009891 | S.RES ERA3YED 151V (150) | B | 47.2/133.9 |
| R555 | 7030003380 | S.RES ERJ3GEYJ 331 V (330) | B | 61.9/142.1 |
| R556 | 7030005981 | S.RES ERA3YED 333V (33K) | B | 44.2/128.2 |
| R561 | 7030003200 | S.RES ERJ3GEYJ 100 V (10) | T | 71.3/148.5 |
| R562 | 7030003360 | S.RES ERJ3GEYJ 221 V (220) | T | 65.7/155.5 |
| R563 | 7030003490 | S.RES ERJ3GEYJ 272 V (2.7K) | T | 70.4/151.9 |
| R564 | 7030003510 | S.RES ERJ3GEYJ 392 V (3.9K) | T | 70.4/150.6 |
| R565 | 7030003360 | S.RES ERJ3GEYJ 221 V (220) | T | 67/155.5 |
| R570 | 7030003230 | S.RES ERJ3GEYJ 180 V (18) | T | 63.1/155.5 |
| R571 | 7030003230 | S.RES ERJ3GEYJ 180 V (18) | T | 58.5/155 |
| R572 | 7030003290 | S.RES ERJ3GEYJ 560 V (56) | B | 57.2/156.3 |
| R573 | 7030003270 | S.RES ERJ3GEYJ 390 V (39) | T | 61.8/155.5 |
| R574 | 7030003240 | S.RES ERJ3GEYJ 220 V (22) | T | 60.5/155.5 |
| R575 | 7030003270 | S.RES ERJ3GEYJ 390 V (39) | T | 58.5/156.3 |
| R580 | 7030009861 | S.RES ERA3YED 471V (470) | T | 41.9/153.7 |
| R581 | 7030003360 | S.RES ERJ3GEYJ 221 V (220) | T | 41.9/145.5 |
| R582 | 7030003600 | S.RES ERJ3GEYJ 223 V (22K) | T | 41.9/149.5 |
| R587 | 7030003300 | S.RES ERJ3GEYJ 680 V (68) | T | 55.7/157.6 |
| R588 | 7030003340 | S.RES ERJ3GEYJ 151 V (150) | T | 58.5/158.9 |
| R589 | 7030003300 | S.RES ERJ3GEYJ 680 V (68) | T | 55.7/158.9 |
| R591 | 7030003320 | S.RES ERJ3GEYJ 101 V (100) | T | 58.2/169.9 |
| R592 | 7030005321 | S.RES ERA3YED 103V (10K) | T | 58.5/167.9 |
| R593 | 7030003480 | S.RES ERJ3GEYJ 222 V (2.2K) | T | 58.5/165.1 |
| R594 | 7030003320 | S.RES ERJ3GEYJ 101 V (100) | B | 61.9/168.1 |
| R595 | 7030003640 | S.RES ERJ3GEYJ 473 V (47K) | B | 55.9/165.3 |
| R596 | 7030003540 | S.RES ERJ3GEYJ 682 V (6.8K) | B | 54.7/168.9 |
| R601 | 7030009851 | S.RES ERA3YED 271V (270) | T | 51.7/118.2 |
| R602 | 7030003470 | S.RES ERJ3GEYJ 182 V (1.8K) | T | 49.5/120.1 |
| R606 | 7030003360 | S.RES ERJ3GEYJ 221 V (220) | T | 45.3/115.6 |
| R607 | 7030003480 | S.RES ERJ3GEYJ 222 V (2.2K) | T | 48.6/115.4 |
| R608 | 7030007230 | S.RES ERA3YED 102V (1K) | T | 49.9/115.4 |
| R651 | 7030007230 | S.RES ERA3YED 102V (1K) | B | 23.5/177.1 |
| R652 | 7030003360 | S.RES ERJ3GEYJ 221 V (220) | T | 13.5/170.8 |
| R653 | 7030007230 | S.RES ERA3YED 102V (1K) | T | 13.5/169.5 |
| R654 | 7030007230 | S.RES ERA3YED 102V (1K) | T | 13.5/168.2 |
| R656 | 7030003800 | S.RES ERJ3GEYJ 105 V (1M) | T | 15/161.4 |
| R657 | 7030003320 | S.RES ERJ3GEYJ 101 V (100) | T | 20.2/161.4 |
| R661 | 7030007220 | S.RES ERA3YED 202V (2K) | T | 31.7/162.8 |
| R662 | 7030007220 | S.RES ERA3YED 202V (2K) | T | 31.7/164.1 |
| R663 | 7030007220 | S.RES ERA3YED 202V (2K) | T | 31.7/165.4 |
| R664 | 7030007220 | S.RES ERA3YED 202V (2K) | T | 31.7/166.7 |
| R665 | 7030007220 | S.RES ERA3YED 202V (2K) | T | 31.7/168 |
| R666 | 7030007220 | S.RES ERA3YED 202V (2K) | T | 31.7/170.6 |
| R667 | 7030007220 | S.RES ERA3YED 202V (2K) | T | 31.7/171.9 |
| R668 | 7030007220 | S.RES ERA3YED 202V (2K) | T | 31.7/173.2 |
| R669 | 7030007200 | S.RES ERA3YEB 202V (2K) | T | 31.7/174.5 |
| R670 | 7030007200 | S.RES ERA3YEB 202V (2K) | T | 31.7/175.8 |
| R671 | 7030007200 | S.RES ERA3YEB 202V (2K) | T | 31.7/177.1 |
| R673 | 7030007230 | S.RES ERA3YED 102V (1K) | T | 34.3/165.4 |
| R674 | 7030007230 | S.RES ERA3YED 102V (1K) | T | 34.3/166.7 |
| R675 | 7030007230 | S.RES ERA3YED 102V (1K) | T | 34.3/168 |

## [RXPLL-B UNIT]

| REF NO. | ORDER NO. | DESCRIPTION | M. | H/V LOCATION |
|---|---|---|---|---|
| R676 | 7030007230 | S.RES ERA3YED 102V (1K) | T | 34.3/169.3 |
| R677 | 7030007230 | S.RES ERA3YED 102V (1K) | T | 34.3/170.6 |
| R678 | 7030007230 | S.RES ERA3YED 102V (1K) | T | 34.3/171.9 |
| R679 | 7030007210 | S.RES ERA3YEB 102V (1K) | T | 34.3/173.2 |
| R680 | 7030007210 | S.RES ERA3YEB 102V (1K) | T | 34.3/174.5 |
| R681 | 7030007210 | S.RES ERA3YEB 102V (1K) | T | 34.3/175.8 |
| R683 | 7030003860 | S.RES ERJ3GE JPW V | B | 58.4/167.8 |
| R685 | 7030003460 | S.RES ERJ3GEYJ 152 V (1.5K) | T | 38.4/169.7 |
| R686 | 7030003320 | S.RES ERJ3GEYJ 101 V (100) | T | 40.3/163.4 |
| R687 | 7030003470 | S.RES ERJ3GEYJ 182 V (1.8K) | T | 37.4/165.1 |
| R688 | 7030003480 | S.RES ERJ3GEYJ 222 V (2.2K) | T | 34.3/162.8 |
| R689 | 7030003360 | S.RES ERJ3GEYJ 221 V (220) | T | 33.6/161.5 |
| R690 | 7030009851 | S.RES ERA3YED 271V (270) | T | 46.4/165.3 |
| R691 | 7030003230 | S.RES ERJ3GEYJ 180 V (18) | T | 48.4/164.8 |
| R692 | 7030009851 | S.RES ERA3YED 271V (270) | T | 46.4/166.6 |
| R693 | 7030003360 | S.RES ERJ3GEYJ 221 V (220) | T | 37.1/169.7 |
| R704 | 7030009841 | S.RES ERA3YHD 330V (33) | T | 30.8/113.7 |
| R705 | 7030003600 | S.RES ERJ3GEYJ 223 V (22K) | T | 29.5/113.7 |
| R706 | 7030005321 | S.RES ERA3YED 103V (10K) | T | 28.2/113.7 |
| R707 | 7030009861 | S.RES ERA3YED 471V (470) | T | 30.8/108.1 |
| R708 | 7030003410 | S.RES ERJ3GEYJ 561 V (560) | T | 43.3/118.8 |
| R709 | 7030007860 | S.RES ERJ3GEYJ 8R2V (8.2) | T | 43.3/116 |
| R710 | 7030003410 | S.RES ERJ3GEYJ 561 V (560) | T | 43.8/121.1 |
| R711 | 7030003320 | S.RES ERJ3GEYJ 101 V (100) | T | 37.9/154.5 |
| R1000 | 7030003320 | S.RES ERJ3GEYJ 101 V (100) | B | 177.1/11.2 |
| R1003 | 7030010980 | S.RES ERA3YHD 470V (47) | T | 162/13.4 |
| R1004 | 7030007230 | S.RES ERA3YED 102V (1K) | B | 166.4/12.9 |
| R1005 | 7030003550 | S.RES ERJ3GEYJ 822 V (8.2K) | T | 144/26.1 |
| R1006 | 7030007230 | S.RES ERA3YED 102V (1K) | T | 145.3/26.1 |
| R1007 | 7030004030 | S.RES ERJ3GEYJ 5R6 V (5.6) | B | 153.7/33.6 |
| R1008 | 7030003240 | S.RES ERJ3GEYJ 220 V (22) | T | 144/36.4 |
| R1009 | 7030010980 | S.RES ERA3YHD 470V (47) | T | 182.4/29.3 |
| R1010 | 7030010980 | S.RES ERA3YHD 470V (47) | T | 154.5/33.2 |
| R1013 | 7030007230 | S.RES ERA3YED 102V (1K) | B | 172.7/40.8 |
| R1014 | 7030007230 | S.RES ERA3YED 102V (1K) | B | 156.7/40.8 |
| R1015 | 7030003530 | S.RES ERJ3GEYJ 562 V (5.6K) | B | 172.7/45.4 |
| R1016 | 7030003530 | S.RES ERJ3GEYJ 562 V (5.6K) | B | 156.7/45.4 |
| R1017 | 7030003530 | S.RES ERJ3GEYJ 562 V (5.6K) | B | 169.7/12.9 |
| R1020 | 7030003390 | S.RES ERJ3GEYJ 391 V (390) | T | 179.6/18.3 |
| R1021 | 7030003220 | S.RES ERJ3GEYJ 150 V (15) | T | 177/19.4 |
| R1022 | 7030003390 | S.RES ERJ3GEYJ 391 V (390) | T | 180.9/19.4 |
| R1023 | 7030010980 | S.RES ERA3YHD 470V (47) | B | 149.3/33.5 |
| R1024 | 7030003200 | S.RES ERJ3GEYJ 100 V (10) | B | 150.1/31.4 |
| R1025 | 7030003300 | S.RES ERJ3GEYJ 680 V (68) | T | 178.3/19.4 |
| R1026 | 7030003480 | S.RES ERJ3GEYJ 222 V (2.2K) | B | 171.2/14.2 |
| R1027 | 7030003200 | S.RES ERJ3GEYJ 100 V (10) | B | 176.5/38.3 |
| R1028 | 7030003200 | S.RES ERJ3GEYJ 100 V (10) | B | 160.5/38.3 |
| R1029 | 7030010980 | S.RES ERA3YHD 470V (47) | B | 178.2/46.1 |
| R1030 | 7030010980 | S.RES ERA3YHD 470V (47) | B | 162.2/46.1 |
| R1051 | 7030003800 | S.RES ERJ3GEYJ 105 V (1M) | T | 178.6/93.1 |
| R1054 | 7030011500 | S.RES ERA3YHD 270V (27) | T | 149.1/83.2 |
| R1055 | 7030000010 | S.RES MCR10EZHJ JPW (000) | T | 162.1/76.6 |
| R1056 | 7030000010 | S.RES MCR10EZHJ JPW (000) | T | 177.5/71.1 |
| R1071 | 7030010980 | S.RES ERA3YHD 470V (47) | B | 165.9/76.4 |
| R1072 | 7030000010 | S.RES MCR10EZHJ JPW (000) | T | 133.9/84.1 |
| R1073 | 7030000010 | S.RES MCR10EZHJ JPW (000) | T | 135.5/85.7 |
| R1101 | 7310004860 | S.TRI EVM-3YSX50 B53 (502) | T | 180.1/90.2 |
| R1102 | 7030005871 | S.RES ERA3YKD 104V (100K) | B | 180.2/100.6 |
| R1103 | 7030007680 | S.RES ERJ8ENF 47R0V (47) | T | 181.7/104.7 |
| R1104 | 7030007680 | S.RES ERJ8ENF 47R0V (47) | T | 173.6/107.2 |
| R1105 | 7030003500 | S.RES ERJ3GEYJ 332 V (3.3K) | T | 176.7/87.7 |
| R1106 | 7030009620 | S.RES ERJ12YJ120U (12) | B | 179.6/117.9 |
| R1107 | 7030010980 | S.RES ERA3YHD 470V (47) | T | 175.6/120.3 |
| R1109 | 7030007180 | S.RES ERJ12YJ150U (15) | B | 176.5/125.7 |
| R1110 | 7030003480 | S.RES ERJ3GEYJ 222 V (2.2K) | B | 168.5/131.6 |
| R1111 | 7030003480 | S.RES ERJ3GEYJ 222 V (2.2K) | T | 166.2/130.4 |
| R1113 | 7030003480 | S.RES ERJ3GEYJ 222 V (2.2K) | T | 166.2/131.7 |
| R1114 | 7030004040 | S.RES ERJ3GEYJ 4R7 V (4.7) | T | 179.2/125.3 |
| R1115 | 7030006240 | S.RES ERJ12YJ181U (180) | B | 176.5/129.9 |
| R1116 | 7030007230 | S.RES ERA3YED 102V (1K) | T | 175.7/135.3 |
| R1117 | 7030004040 | S.RES ERJ3GEYJ 4R7 V (4.7) | T | 175.7/134 |
| R1118 | 7030003480 | S.RES ERJ3GEYJ 222 V (2.2K) | T | 175.4/132 |
| R1119 | 7030003470 | S.RES ERJ3GEYJ 182 V (1.8K) | T | 178/132 |
| R1120 | 7030006070 | S.RES ERJ12YJ101U (100) | B | 177.3/141 |
| R1121 | 7030003240 | S.RES ERJ3GEYJ 220 V (22) | T | 178.6/139.6 |
| R1122 | 7030010980 | S.RES ERA3YHD 470V (47) | T | 171.9/131.1 |
| R1123 | 7030003480 | S.RES ERJ3GEYJ 222 V (2.2K) | T | 165.7/137.4 |
| R1124 | 7030003460 | S.RES ERJ3GEYJ 152 V (1.5K) | T | 165.7/140 |
| R1125 | 7030003420 | S.RES ERJ3GEYJ 681 V (680) | B | 171/142.2 |
| R1126 | 7030003200 | S.RES ERJ3GEYJ 100 V (10) | T | 168.4/142.2 |
| R1127 | 7030010980 | S.RES ERA3YHD 470V (47) | T | 174.6/142.9 |
| R1128 | 7030003470 | S.RES ERJ3GEYJ 182 V (1.8K) | T | 174.6/146.6 |
| R1129 | 7030003470 | S.RES ERJ3GEYJ 182 V (1.8K) | T | 174.6/148.4 |
| R1130 | 7030003480 | S.RES ERJ3GEYJ 222 V (2.2K) | T | 180.6/146.4 |
| R1131 | 7030003640 | S.RES ERJ3GEYJ 473 V (47K) | B | 177.4/90.7 |
| R1132 | 7310004860 | S.TRI EVM-3YSX50 B53 (502) | T | 179.4/84.3 |
| R1133 | 7030003500 | S.RES ERJ3GEYJ 332 V (3.3K) | T | 175.5/82.5 |
| R1134 | 7030003640 | S.RES ERJ3GEYJ 473 V (47K) | T | 175.5/83.8 |
| R1135 | 7030005871 | S.RES ERA3YKD 104V (100K) | T | 182.2/97.8 |
| R1151 | 7030003280 | S.RES ERJ3GEYJ 470 V (47) | T | 134.8/63.9 |
| R1152 | 7030003280 | S.RES ERJ3GEYJ 470 V (47) | B | 117.2/56.3 |
| R1203 | 7030000010 | S.RES MCR10EZHJ JPW (000) | T | 157.5/74.9 |
| R1211 | 7030003860 | S.RES ERJ3GE JPW V | T | 117.6/7.8 |
| R1212 | 7030003860 | S.RES ERJ3GE JPW V | T | 124.8/51.1 |
| R1213 | 7030003200 | S.RES ERJ3GEYJ 100 V (10) | B | 118.8/25 |
| R1214 | 7030003200 | S.RES ERJ3GEYJ 100 V (10) | B | 109/25 |
| R1216 | 7030010980 | S.RES ERA3YHD 470V (47) | B | 120.7/31.6 |
| R1217 | 7030010980 | S.RES ERA3YHD 470V (47) | B | 111.2/31.6 |
| R1220 | 7030010980 | S.RES ERA3YHD 470V (47) | T | 118.7/17.3 |
| R1221 | 7030007230 | S.RES ERA3YED 102V (1K) | T | 116.4/39.9 |
| R1222 | 7030003530 | S.RES ERJ3GEYJ 562 V (5.6K) | T | 116.4/38.6 |
| R1223 | 7030010980 | S.RES ERA3YHD 470V (47) | T | 109.3/17.1 |
| R1224 | 7030007230 | S.RES ERA3YED 102V (1K) | T | 106.6/39.9 |
| R1225 | 7030003530 | S.RES ERJ3GEYJ 562 V (5.6K) | T | 106.6/38.6 |

M.=Mounted side (T: Mounted on the Top side, B: Mounted on the Bottom side)
S.=Surface mount

## [RXPLL-B UNIT]

| REF NO. | ORDER NO. | DESCRIPTION | M. | H/V LOCATION |
|---|---|---|---|---|
| R1226 | 7030003410 | S.RES ERJ3GEYJ 561 V (560) | T | 158.9/92.9 |
| R1227 | 7030003410 | S.RES ERJ3GEYJ 561 V (560) | T | 154/92.9 |
| R1228 | 7310004860 | S.TRI EVM-3YSX50 B53 (502) | T | 156.4/92.9 |
| R1229 | 7030003480 | S.RES ERJ3GEYJ 222 V (2.2K) | B | 156.1/117.4 |
| R1230 | 7030003480 | S.RES ERJ3GEYJ 222 V (2.2K) | B | 156.1/119.2 |
| R1231 | 7030003480 | S.RES ERJ3GEYJ 222 V (2.2K) | B | 156.1/121 |
| R1232 | 7030003600 | S.RES ERJ3GEYJ 223 V (22K) | T | 156.3/97.5 |
| R1233 | 7030010980 | S.RES ERA3YHD 470V (47) | B | 152.5/109.4 |
| R1301 | 7030010980 | S.RES ERA3YHD 470V (47) | B | 155.7/97.5 |
| R1302 | 7030003860 | S.RES ERJ3GE JPW V | T | 159.3/116.8 |
| R1304 | 7030003620 | S.RES ERJ3GEYJ 333 V (33K) | T | 156.5/123.2 |
| R1306 | 7030006230 | S.RES ERJ12YJ151U (150) | B | 153.8/124.8 |
| R1307 | 7030003300 | S.RES ERJ3GEYJ 680 V (68) | T | 156.5/128.4 |
| R1311 | 7030000010 | S.RES MCR10EZHJ JPW (000) | T | 140.3/98.8 |
| R1312 | 7030000010 | S.RES MCR10EZHJ JPW (000) | T | 143.2/104.1 |
| R1313 | 7030000010 | S.RES MCR10EZHJ JPW (000) | T | 143.2/101.5 |
| R1357 | 7030007230 | S.RES ERA3YED 102V (1K) | B | 140.7/70.4 |
| R1358 | 7030003530 | S.RES ERJ3GEYJ 562 V (5.6K) | B | 142.8/70.4 |
| R1359 | 7030010980 | S.RES ERA3YHD 470V (47) | T | 139.4/64.7 |
| R1360 | 7030007230 | S.RES ERA3YED 102V (1K) | B | 146.4/67.1 |
| R1361 | 7030003380 | S.RES ERJ3GEYJ 331 V (330) | T | 139.3/68.8 |
| R1362 | 7030005871 | S.RES ERA3YKD 104V (100K) | B | 144.6/70.4 |
| R1401 | 7030003200 | S.RES ERJ3GEYJ 100 V (10) | T | 131.5/103.3 |
| R1402 | 7030003300 | S.RES ERJ3GEYJ 680 V (68) | T | 126.4/111 |
| R1403 | 7030007230 | S.RES ERA3YED 102V (1K) | T | 132/107.7 |
| R1404 | 7030009861 | S.RES ERA3YED 471V (470) | T | 134.6/104.3 |
| R1405 | 7030003340 | S.RES ERJ3GEYJ 151 V (150) | T | 137.2/104.3 |
| R1406 | 7030009591 | S.RES ERA3YED 472V (4.7K) | T | 135.2/106.2 |
| R1407 | 7030003550 | S.RES ERJ3GEYJ 822 V (8.2K) | B | 135.4/104.3 |
| R1408 | 7030003200 | S.RES ERJ3GEYJ 100 V (10) | T | 120.9/109 |
| R1409 | 7030009591 | S.RES ERA3YED 472V (4.7K) | T | 120.5/114.9 |
| R1410 | 7030006091 | S.RES ERA3YED 822V (8.2K) | B | 124.2/114.4 |
| R1411 | 7030005871 | S.RES ERA3YKD 104V (100K) | T | 123.2/116.2 |
| R1412 | 7030003200 | S.RES ERJ3GEYJ 100 V (10) | T | 126.4/112.3 |
| R1413 | 7030003200 | S.RES ERJ3GEYJ 100 V (10) | T | 126.4/113.6 |
| R1414 | 7030005871 | S.RES ERA3YKD 104V (100K) | B | 120.9/114.4 |
| R1415 | 7030010980 | S.RES ERA3YHD 470V (47) | T | 127/114.9 |
| R1416 | 7030003320 | S.RES ERJ3GEYJ 101 V (100) | B | 139.7/122.9 |
| R1417 | 7030000010 | S.RES MCR10EZHJ JPW (000) | B | 130.1/124.5 |
| R1418 | 7030000010 | S.RES MCR10EZHJ JPW (000) | B | 130.1/122.5 |
| R1419 | 7030003860 | S.RES ERJ3GE JPW V | B | 129.4/114.9 |
| R1501 | 7030010980 | S.RES ERA3YHD 470V (47) | T | 126.5/125.2 |
| R1502 | 7030009841 | S.RES ERA3YHD 330V (33) | T | 133/131 |
| R1503 | 7030009851 | S.RES ERA3YED 271V (270) | T | 130/146.3 |
| R1504 | 7030011050 | S.RES ERA3YHD 100V (10) | T | 131.3/143.5 |
| R1505 | 7030006091 | S.RES ERA3YED 822V (8.2K) | B | 137.7/140.3 |
| R1506 | 7030007230 | S.RES ERA3YED 102V (1K) | B | 137.7/147 |
| R1507 | 7030007230 | S.RES ERA3YED 102V (1K) | T | 132.6/146.3 |
| R1508 | 7030007230 | S.RES ERA3YED 102V (1K) | T | 133.9/146.3 |
| R1509 | 7030007230 | S.RES ERA3YED 102V (1K) | T | 139.1/158.9 |
| R1510 | 7030005321 | S.RES ERA3YED 103V (10K) | T | 139.1/157.6 |
| R1511 | 7030009861 | S.RES ERA3YED 471V (470) | T | 136.5/157.6 |
| R1512 | 7030003380 | S.RES ERJ3GEYJ 331 V (330) | T | 129.6/151.6 |
| R1513 | 7030003380 | S.RES ERJ3GEYJ 331 V (330) | T | 129.6/155.5 |
| R1514 | 7030005321 | S.RES ERA3YED 103V (10K) | T | 129.6/160.8 |
| R1515 | 7030005321 | S.RES ERA3YED 103V (10K) | T | 133.5/160.8 |
| R1516 | 7310005090 | S.TRI RH03ADC13X (1K) | T | 119.2/157.7 |
| R1517 | 7030005321 | S.RES ERA3YED 103V (10K) | T | 115.3/158 |
| R1518 | 7030005321 | S.RES ERA3YED 103V (10K) | T | 134.8/160.8 |
| R1519 | 7030005321 | S.RES ERA3YED 103V (10K) | T | 131.7/171.7 |
| R1520 | 7030005321 | S.RES ERA3YED 103V (10K) | T | 136.1/160.8 |
| R1521 | 7030010980 | S.RES ERA3YHD 470V (47) | T | 126.5/133 |
| R1522 | 7030009841 | S.RES ERA3YHD 330V (33) | T | 126/141.1 |
| R1523 | 7030009851 | S.RES ERA3YED 271V (270) | T | 123.7/146.3 |
| R1524 | 7030011050 | S.RES ERA3YHD 100V (10) | T | 122.4/143.5 |
| R1525 | 7030007230 | S.RES ERA3YED 102V (1K) | B | 128.8/147 |
| R1526 | 7030003460 | S.RES ERJ3GEYJ 152 V (1.5K) | B | 137.7/142.1 |
| R1527 | 7030007230 | S.RES ERA3YED 102V (1K) | T | 119.8/146.3 |
| R1528 | 7030007230 | S.RES ERA3YED 102V (1K) | T | 121.1/146.3 |
| R1529 | 7030007230 | S.RES ERA3YED 102V (1K) | T | 115.3/152.3 |
| R1530 | 7030003380 | S.RES ERJ3GEYJ 331 V (330) | T | 128/151.6 |
| R1531 | 7030003380 | S.RES ERJ3GEYJ 331 V (330) | T | 128/155.5 |
| R1532 | 7030005321 | S.RES ERA3YED 103V (10K) | T | 124.1/160.8 |
| R1533 | 7030005321 | S.RES ERA3YED 103V (10K) | T | 128/160.8 |
| R1534 | 7030005321 | S.RES ERA3YED 103V (10K) | T | 122.8/160.8 |
| R1535 | 7030005321 | S.RES ERA3YED 103V (10K) | T | 121.5/160.8 |
| R1536 | 7030005321 | S.RES ERA3YED 103V (10K) | T | 129/171.7 |
| R1537 | 7030003320 | S.RES ERJ3GEYJ 101 V (100) | T | 115.5/164.5 |
| R1538 | 7030003320 | S.RES ERJ3GEYJ 101 V (100) | T | 107.1/170.1 |
| R1539 | 7030008061 | S.RES ERA3YED 222V (2.2K) | B | 131.8/176.4 |
| R1540 | 7030010390 | S.RES ERA3YED 821V (820) | B | 128.7/177.1 |
| R1541 | 7030003320 | S.RES ERJ3GEYJ 101 V (100) | T | 107.1/178.8 |
| R1542 | 7030003320 | S.RES ERJ3GEYJ 101 V (100) | T | 115.5/173.2 |
| R1543 | 7030009691 | S.RES ERA3YED 101V (100) | B | 130.6/179 |
| R1651 | 7030003380 | S.RES ERJ3GEYJ 331 V (330) | B | 100.9/144.8 |
| R1652 | 7030003220 | S.RES ERJ3GEYJ 150 V (15) | B | 102.7/144.8 |
| R1653 | 7030003380 | S.RES ERJ3GEYJ 331 V (330) | B | 101.9/142.9 |
| R1654 | 7030010980 | S.RES ERA3YHD 470V (47) | B | 105.5/142.2 |
| R1655 | 7030009861 | S.RES ERA3YED 471V (470) | B | 108.8/140 |
| R1656 | 7030003630 | S.RES ERJ3GEYJ 393 V (39K) | B | 108.3/142.2 |
| R1657 | 7030005871 | S.RES ERA3YKD 104V (100K) | T | 108/133.1 |
| R1658 | 7030003320 | S.RES ERJ3GEYJ 101 V (100) | T | 110.6/133.1 |
| R1659 | 7030009691 | S.RES ERA3YED 101V (100) | T | 115.8/124.9 |
| R1660 | 7030009691 | S.RES ERA3YED 101V (100) | T | 115.8/128.7 |
| R1661 | 7030005321 | S.RES ERA3YED 103V (10K) | T | 135.1/175.4 |
| R1662 | 7030005321 | S.RES ERA3YED 103V (10K) | T | 135.2/172.8 |
| R1663 | 7030005321 | S.RES ERA3YED 103V (10K) | T | 144.3/175.4 |
| R1664 | 7030005321 | S.RES ERA3YED 103V (10K) | T | 139.9/172.1 |
| R1665 | 7030003320 | S.RES ERJ3GEYJ 101 V (100) | T | 109.3/133.1 |
| R1667 | 7030003360 | S.RES ERJ3GEYJ 221 V (220) | T | 139.2/170.2 |
| R1668 | 7030003360 | S.RES ERJ3GEYJ 221 V (220) | T | 141.8/170.2 |
| R1670 | 7030003800 | S.RES ERJ3GEYJ 105 V (1M) | T | 140.2/164.1 |
| R1673 | 7030007230 | S.RES ERA3YED 102V (1K) | B | 146/174.5 |
| R1674 | 7030009851 | S.RES ERA3YED 271V (270) | B | 145.1/177.1 |

## [RXPLL-B UNIT]

| REF NO. | ORDER NO. | DESCRIPTION | M. | H/V LOCATION |
|---|---|---|---|---|
| R1675 | 7030009591 | S.RES ERA3YED 472V (4.7K) | T | 136.6/170.2 |
| R1677 | 7030009591 | S.RES ERA3YED 472V (4.7K) | T | 143.1/170.2 |
| R1701 | 7030003360 | S.RES ERJ3GEYJ 221 V (220) | T | 162.4/147.4 |
| R1703 | 7030003360 | S.RES ERJ3GEYJ 221 V (220) | T | 159.8/147.4 |
| R1704 | 7030003360 | S.RES ERJ3GEYJ 221 V (220) | T | 158.5/147.4 |
| R1706 | 7030003360 | S.RES ERJ3GEYJ 221 V (220) | T | 155.9/147.4 |
| R1707 | 7030003360 | S.RES ERJ3GEYJ 221 V (220) | T | 154.6/147.4 |
| R1708 | 7030003360 | S.RES ERJ3GEYJ 221 V (220) | T | 153.3/147.4 |
| R1709 | 7030003480 | S.RES ERJ3GEYJ 222 V (2.2K) | T | 149.7/159.3 |
| R1710 | 7030003480 | S.RES ERJ3GEYJ 222 V (2.2K) | T | 148.4/159.3 |
| R1711 | 7030003540 | S.RES ERJ3GEYJ 682 V (6.8K) | T | 147.1/159.3 |
| R1712 | 7030003540 | S.RES ERJ3GEYJ 682 V (6.8K) | T | 145.8/159.3 |
| R1713 | 7030003660 | S.RES ERJ3GEYJ 683 V (68K) | T | 145.8/157.2 |
| R1714 | 7030003660 | S.RES ERJ3GEYJ 683 V (68K) | T | 145.8/155.9 |
| R1715 | 7030003540 | S.RES ERJ3GEYJ 682 V (6.8K) | T | 143.9/164.8 |
| R1716 | 7030007230 | S.RES ERA3YED 102V (1K) | T | 164.2/164.8 |
| R1717 | 7030007230 | S.RES ERA3YED 102V (1K) | T | 164.2/163.5 |
| R1718 | 7030007230 | S.RES ERA3YED 102V (1K) | T | 164.2/162.2 |
| R1719 | 7030003660 | S.RES ERJ3GEYJ 683 V (68K) | T | 144.3/166.8 |
| | | | | |
| C1 | 4030011600 | S.CER C1608 JB 1E 104K-T | T | 10.8/18.2 |
| C2 | 4030006880 | S.CER C1608 JB 1H 472K-T | T | 25.7/29.5 |
| C14 | 4030006880 | S.CER C1608 JB 1H 472K-T | T | 37.7/12.5 |
| C15 | 4030006880 | S.CER C1608 JB 1H 472K-T | T | 31.2/15.4 |
| C16 | 4030006880 | S.CER C1608 JB 1H 472K-T | T | 35.1/15.4 |
| C17 | 4030006880 | S.CER C1608 JB 1H 472K-T | T | 13.8/12.6 |
| C18 | 4030006880 | S.CER C1608 JB 1H 472K-T | T | 16.8/12.6 |
| C19 | 4030006880 | S.CER C1608 JB 1H 472K-T | T | 29.5/12.6 |
| C20 | 4030006880 | S.CER C1608 JB 1H 472K-T | T | 87.4/127.8 |
| C21 | 4030006880 | S.CER C1608 JB 1H 472K-T | T | 88.7/127.8 |
| C22 | 4030006880 | S.CER C1608 JB 1H 472K-T | T | 90/127.8 |
| C30 | 4030011600 | S.CER C1608 JB 1E 104K-T | T | 19.1/112.4 |
| C31 | 4030011600 | S.CER C1608 JB 1E 104K-T | T | 20.4/113.7 |
| C32 | 4030011600 | S.CER C1608 JB 1E 104K-T | T | 24.3/111.1 |
| C51 | 4510008520 | S.ELE EEE1CA470SP | T | 84/20.3 |
| C52 | 4030011600 | S.CER C1608 JB 1E 104K-T | T | 78.9/23.7 |
| C53 | 4030011600 | S.CER C1608 JB 1E 104K-T | T | 75.1/23.7 |
| C54 | 4510008500 | S.ELE EEE1CA101WP | T | 70/20.3 |
| C61 | 4510008520 | S.ELE EEE1CA470SP | T | 62.9/20.3 |
| C62 | 4030011600 | S.CER C1608 JB 1E 104K-T | B | 58.2/19.9 |
| C63 | 4030011600 | S.CER C1608 JB 1E 104K-T | B | 54.8/19.9 |
| C64 | 4510008500 | S.ELE EEE1CA101WP | T | 50.1/20.3 |
| C101 | 4030006880 | S.CER C1608 JB 1H 472K-T | T | 39.7/80.7 |
| C102 | 4030011600 | S.CER C1608 JB 1E 104K-T | T | 41.8/79.9 |
| C103 | 4510008540 | S.ELE EEE1CA100SR | T | 40.2/76.8 |
| C104 | 4030011600 | S.CER C1608 JB 1E 104K-T | T | 21.4/100.2 |
| C105 | 4030011600 | S.CER C1608 JB 1E 104K-T | T | 21.4/88.2 |
| C106 | 4030011600 | S.CER C1608 JB 1E 104K-T | T | 21.4/84.4 |
| C107 | 4030011600 | S.CER C1608 JB 1E 104K-T | T | 24.4/79.8 |
| C108 | 4030011600 | S.CER C1608 JB 1E 104K-T | T | 27/79.8 |
| C109 | 4030011600 | S.CER C1608 JB 1E 104K-T | T | 30.8/79.8 |
| C110 | 4030011600 | S.CER C1608 JB 1E 104K-T | T | 36.8/79.8 |
| C111 | 4030011600 | S.CER C1608 JB 1E 104K-T | T | 41.2/88.5 |
| C112 | 4030011600 | S.CER C1608 JB 1E 104K-T | T | 41.3/82.6 |
| C114 | 4030011600 | S.CER C1608 JB 1E 104K-T | T | 39.5/98.4 |
| C115 | 4030011600 | S.CER C1608 JB 1E 104K-T | T | 38.1/98.4 |
| C116 | 4030011600 | S.CER C1608 JB 1E 104K-T | T | 35.3/99.6 |
| C117 | 4030011600 | S.CER C1608 JB 1E 104K-T | T | 23.3/98.8 |
| C118 | 4030011600 | S.CER C1608 JB 1E 104K-T | T | 42.6/82.6 |
| C120 | 4030006880 | S.CER C1608 JB 1H 472K-T | T | 36.7/101.5 |
| C121 | 4030011600 | S.CER C1608 JB 1E 104K-T | T | 39.5/101.5 |
| C125 | 4030011600 | S.CER C1608 JB 1E 104K-T | T | 14.6/83.1 |
| C129 | 4030011600 | S.CER C1608 JB 1E 104K-T | T | 33.4/79.8 |
| C130 | 4030017810 | S.CER C1608 CH 1H 102J-T | B | 47.6/106.6 |
| C131 | 4030011600 | S.CER C1608 JB 1E 104K-T | T | 30.4/73.2 |
| C132 | 4030011600 | S.CER C1608 JB 1E 104K-T | T | 35.5/73.2 |
| C133 | 4030006880 | S.CER C1608 JB 1H 472K-T | B | 43.5/98.6 |
| C134 | 4030006880 | S.CER C1608 JB 1H 472K-T | B | 43.5/96.8 |
| C135 | 4030006880 | S.CER C1608 JB 1H 472K-T | T | 46/95.5 |
| C136 | 4030006880 | S.CER C1608 JB 1H 472K-T | T | 46/94.2 |
| C137 | 4030006880 | S.CER C1608 JB 1H 472K-T | T | 46/90.3 |
| C138 | 4030006880 | S.CER C1608 JB 1H 472K-T | T | 46.1/87.7 |
| C139 | 4030006880 | S.CER C1608 JB 1H 472K-T | B | 43.5/100.4 |
| C141 | 4030004740 | S.CER C2012 JB 1H 472K-T | B | 34.3/85.1 |
| C142 | 4550007470 | S.TAN F931A107MNMBMA | B | 19.4/87.4 |
| C150 | 4340000050 | S.MYL ECH-U 1C472JB5 | T | 16.3/64.6 |
| C151 | 4550007520 | S.TAN F931A106MAABMA | B | 38.6/92.1 |
| C152 | 4030007070 | S.CER C1608 CH 1H 330J-T | T | 19.2/59.9 |
| C153 | 4030009910 | S.CER C1608 CH 1H 040B-T | T | 21.3/55.4 |
| C154 | 4610001850 | S.TRI TZB4R200AB10R00 (TZBX4R200BA110) | T | 17.6/55.1 |
| C155 | 4030016550 | S.CER CM105 CH 151G 50AT | T | 24.1/55.4 |
| C156 | 4030016550 | S.CER CM105 CH 151G 50AT | T | 26.9/55.4 |
| C157 | 4030016550 | S.CER CM105 CH 151G 50AT | T | 26.9/56.7 |
| C158 | 4030006880 | S.CER C1608 JB 1H 472K-T | T | 23.3/53.1 |
| C159 | 4030006880 | S.CER C1608 JB 1H 472K-T | B | 23/51.9 |
| C161 | 4510008540 | S.ELE EEE1CA100SR | T | 31.3/61 |
| C162 | 4030009920 | S.CER C1608 CH 1H 050B-T | B | 33.6/53 |
| C163 | 4030011600 | S.CER C1608 JB 1E 104K-T | B | 36.9/59.6 |
| C164 | 4030006880 | S.CER C1608 JB 1H 472K-T | B | 30.3/54.8 |
| C165 | 4030006880 | S.CER C1608 JB 1H 472K-T | B | 30.8/74 |
| C166 | 4030011600 | S.CER C1608 JB 1E 104K-T | B | 34.9/78.2 |
| C167 | 4030006880 | S.CER C1608 JB 1H 472K-T | B | 37.4/74 |
| C201 | 4030011340 | S.CER C1608 CH 1H 471J-T | T | 33.8/40.4 |
| C202 | 4510009280 | S.ELE EEE1EA4R7SR | T | 26.5/44 |
| C203 | 4030006900 | S.CER C1608 JB 1H 103K-T | T | 32.5/38.3 |
| C204 | 4030006880 | S.CER C1608 JB 1H 472K-T | T | 25.4/35.3 |
| C205 | 4030006880 | S.CER C1608 JB 1H 472K-T | T | 25.4/34 |
| C206 | 4030006880 | S.CER C1608 JB 1H 472K-T | T | 31.1/43 |
| C207 | 4030007030 | S.CER C1608 CH 1H 150J-T | B | 46.8/32.4 |
| C208 | 4030007030 | S.CER C1608 CH 1H 150J-T | T | 32.5/41 |
| C209 | 4030011340 | S.CER C1608 CH 1H 471J-T | T | 44.1/26.1 |
| C210 | 4550007620 | S.TAN F931V224MAABMA | T | 46.2/26.7 |

M.=Mounted side (T: Mounted on the Top side, B: Mounted on the Bottom side)
S.=Surface mount

## [RXPLL-B]

| REF NO. | ORDER NO. | DESCRIPTION | | M. | H/V LOCATION |
|---|---|---|---|---|---|
| C211 | 4550007300 | S.TAN | F931A335MAABMA | B | 46.1/41.6 |
| C219 | 4030006880 | S.CER | C1608 JB 1H 472K-T | T | 33.8/37.8 |
| C220 | 4030007130 | S.CER | C1608 CH 1H 101J-T | T | 54.7/37.6 |
| C221 | 4030009520 | S.CER | C1608 CH 1H 020B-T | T | 54.7/32 |
| C222 | 4610001860 | S.TRI | TZB4Z060AB10R00 (TZBX4R200BA110) | T | 68.1/32.6 |
| C223 | 4030007080 | S.CER | C1608 CH 1H 390J-T | T | 73.2/36.3 |
| C224 | 4030007010 | S.CER | C1608 CH 1H 100D-T | T | 73.2/38.9 |
| C225 | 4030007050 | S.CER | C1608 CH 1H 220J-T | T | 73.6/30.9 |
| C226 | 4030006880 | S.CER | C1608 JB 1H 472K-T | T | 71/30.9 |
| C227 | 4030009920 | S.CER | C1608 CH 1H 050B-T | T | 75.1/32.6 |
| C228 | 4510008540 | S.ELE | EEE1CA100SR | T | 68.8/37.8 |
| C229 | 4030009530 | S.CER | C1608 CH 1H 030B-T | T | 77.8/32.6 |
| C230 | 4030007100 | S.CER | C1608 CH 1H 560J-T | T | 54.7/50 |
| C231 | 4030009510 | S.CER | C1608 CH 1H 010B-T | T | 54.7/44.6 |
| C232 | 4610001860 | S.TRI | TZB4Z060AB10R00 (TZBX4R200BA110) | T | 68.1/45.1 |
| C233 | 4030007070 | S.CER | C1608 CH 1H 330J-T | T | 73.2/48.8 |
| C234 | 4030009920 | S.CER | C1608 CH 1H 050B-T | T | 73.2/51.4 |
| C235 | 4030007020 | S.CER | C1608 CH 1H 120J-T | T | 73.6/43.3 |
| C236 | 4030006880 | S.CER | C1608 JB 1H 472K-T | T | 71/43.3 |
| C237 | 4030009910 | S.CER | C1608 CH 1H 040B-T | T | 75.1/45 |
| C238 | 4510008540 | S.ELE | EEE1CA100SR | T | 68.8/50.3 |
| C239 | 4030009910 | S.CER | C1608 CH 1H 040B-T | T | 77.8/45 |
| C240 | 4030007080 | S.CER | C1608 CH 1H 390J-T | T | 54.7/62.5 |
| C241 | 4030009510 | S.CER | C1608 CH 1H 010B-T | T | 54.7/57.1 |
| C242 | 4610001860 | S.TRI | TZB4Z060AB10R00 (TZBX4R200BA110) | T | 68.1/57.6 |
| C243 | 4030007060 | S.CER | C1608 CH 1H 270J-T | T | 73.2/61.3 |
| C244 | 4030009910 | S.CER | C1608 CH 1H 040B-T | T | 73.2/63.9 |
| C245 | 4030009920 | S.CER | C1608 CH 1H 050B-T | T | 73.6/55.8 |
| C246 | 4030006880 | S.CER | C1608 JB 1H 472K-T | T | 71/55.9 |
| C247 | 4030009530 | S.CER | C1608 CH 1H 030B-T | T | 75.1/57.5 |
| C248 | 4510008540 | S.ELE | EEE1CA100SR | T | 68.8/62.9 |
| C250 | 4030007100 | S.CER | C1608 CH 1H 560J-T | T | 54.7/75 |
| C251 | 4030009540 | S.CER | C1608 CH 1H 1R5B-T | T | 54.7/69.6 |
| C252 | 4610001810 | S.TRI | TZB4Z030AB10R00 (TZBX4Z030BA110) | T | 68.1/70.1 |
| C253 | 4030007080 | S.CER | C1608 CH 1H 390J-T | T | 73.2/73.8 |
| C254 | 4030009530 | S.CER | C1608 CH 1H 030B-T | T | 73.2/76.4 |
| C255 | 4030006990 | S.CER | C1608 CH 1H 080D-T | T | 73.6/68.4 |
| C256 | 4030006880 | S.CER | C1608 JB 1H 472K-T | T | 71/68.4 |
| C257 | 4030007010 | S.CER | C1608 CH 1H 100D-T | T | 75.1/70 |
| C258 | 4510008540 | S.ELE | EEE1CA100SR | T | 68.8/75.4 |
| C260 | 4030007110 | S.CER | C1608 CH 1H 680J-T | T | 54.7/87.5 |
| C262 | 4610001810 | S.TRI | TZB4Z030AB10R00 (TZBX4Z030BA110) | T | 68.1/82.6 |
| C263 | 4030007080 | S.CER | C1608 CH 1H 390J-T | T | 73.2/86.3 |
| C264 | 4030009530 | S.CER | C1608 CH 1H 030B-T | T | 73.2/88.9 |
| C265 | 4030011770 | S.CER | C1608 CH 1H 060B-T | T | 73.6/80.9 |
| C266 | 4030006880 | S.CER | C1608 JB 1H 472K-T | T | 71/80.9 |
| C267 | 4030007010 | S.CER | C1608 CH 1H 100D-T | T | 75.1/82.5 |
| C268 | 4510008540 | S.ELE | EEE1CA100SR | T | 68.8/87.9 |
| C272 | 4610001860 | S.TRI | TZB4Z060AB10R00 (TZBX4R200BA110) | T | 68.1/95.1 |
| C273 | 4030007050 | S.CER | C1608 CH 1H 220J-T | T | 73.2/98.2 |
| C274 | 4030009530 | S.CER | C1608 CH 1H 030B-T | T | 73.2/100.8 |
| C275 | 4030009920 | S.CER | C1608 CH 1H 050B-T | T | 73.6/92.8 |
| C276 | 4030006880 | S.CER | C1608 JB 1H 472K-T | T | 71/92.8 |
| C277 | 4030007010 | S.CER | C1608 CH 1H 100D-T | T | 75.1/95 |
| C278 | 4510008540 | S.ELE | EEE1CA100SR | T | 68.8/100.4 |
| C283 | 4030017810 | S.CER | C1608 CH 1H 102J-T | T | 82.1/36.3 |
| C284 | 4030006880 | S.CER | C1608 JB 1H 472K-T | T | 84.5/34.3 |
| C285 | 4030017810 | S.CER | C1608 CH 1H 102J-T | T | 82.1/48.8 |
| C286 | 4030006880 | S.CER | C1608 JB 1H 472K-T | T | 84.5/46.9 |
| C287 | 4030017810 | S.CER | C1608 CH 1H 102J-T | T | 82.1/61.3 |
| C288 | 4030006880 | S.CER | C1608 JB 1H 472K-T | T | 83.9/57.5 |
| C289 | 4030017810 | S.CER | C1608 CH 1H 102J-T | T | 82.1/73.8 |
| C290 | 4030006880 | S.CER | C1608 JB 1H 472K-T | T | 84.3/70.4 |
| C291 | 4030017810 | S.CER | C1608 CH 1H 102J-T | T | 82.1/86.3 |
| C292 | 4030006880 | S.CER | C1608 JB 1H 472K-T | T | 84.4/84.4 |
| C293 | 4030017810 | S.CER | C1608 CH 1H 102J-T | T | 82.1/98.7 |
| C294 | 4030006880 | S.CER | C1608 JB 1H 472K-T | T | 83.2/93.9 |
| C297 | 4030009920 | S.CER | C1608 CH 1H 050B-T | T | 52.6/59.4 |
| C299 | 4030007050 | S.CER | C1608 CH 1H 220J-T | T | 52.6/84.4 |
| C301 | 4030006880 | S.CER | C1608 JB 1H 472K-T | T | 89.3/30.6 |
| C302 | 4030006880 | S.CER | C1608 JB 1H 472K-T | T | 94.9/28 |
| C303 | 4030006880 | S.CER | C1608 JB 1H 472K-T | B | 92.6/39.8 |
| C304 | 4030006880 | S.CER | C1608 JB 1H 472K-T | B | 92.6/45.2 |
| C305 | 4030006880 | S.CER | C1608 JB 1H 472K-T | B | 89.1/48.8 |
| C306 | 4030006880 | S.CER | C1608 JB 1H 472K-T | B | 89.1/50.6 |
| C309 | 4030017810 | S.CER | C1608 CH 1H 102J-T | T | 94.9/42.7 |
| C310 | 4030011600 | S.CER | C1608 JB 1E 104K-T | T | 92.8/42.1 |
| C311 | 4510008520 | S.ELE | EEE1CA470SP | T | 93.4/47.4 |
| C312 | 4030006880 | S.CER | C1608 JB 1H 472K-T | B | 89/27.4 |
| C313 | 4030006880 | S.CER | C1608 JB 1H 472K-T | B | 93.7/23.1 |
| C331 | 4030007110 | S.CER | C1608 CH 1H 680J-T | T | 89.3/32.2 |
| C332 | 4030007160 | S.CER | C1608 CH 1H 181J-T | T | 92.1/33.5 |
| C333 | 4030007110 | S.CER | C1608 CH 1H 680J-T | T | 89.3/33.5 |
| C334 | 4030007050 | S.CER | C1608 CH 1H 220J-T | T | 94.9/36 |
| C335 | 4030006980 | S.CER | C1608 CH 1H 070D-T | T | 94.9/37.4 |
| C336 | 4030007030 | S.CER | C1608 CH 1H 150J-T | T | 92.1/38.8 |
| C337 | 4030007050 | S.CER | C1608 CH 1H 220J-T | T | 94.9/38.8 |
| C341 | 4030006880 | S.CER | C1608 JB 1H 472K-T | T | 94.9/40.1 |
| C342 | 4030006880 | S.CER | C1608 JB 1H 472K-T | T | 86.5/33.5 |
| C344 | 4030011600 | S.CER | C1608 JB 1E 104K-T | T | 94.9/41.4 |
| C351 | 4030017810 | S.CER | C1608 CH 1H 102J-T | T | 94.9/61.6 |
| C352 | 4030011600 | S.CER | C1608 JB 1E 104K-T | T | 94.9/62.9 |
| C353 | 4510008520 | S.ELE | EEE1CA470SP | T | 93.4/67.1 |
| C354 | 4030006880 | S.CER | C1608 JB 1H 472K-T | T | 89.3/51.7 |
| C355 | 4030006880 | S.CER | C1608 JB 1H 472K-T | T | 94.9/55.1 |
| C356 | 4030006880 | S.CER | C1608 JB 1H 472K-T | T | 89.2/58.4 |
| C357 | 4030006880 | S.CER | C1608 JB 1H 472K-T | T | 94.9/57.7 |
| C358 | 4030006880 | S.CER | C1608 JB 1H 472K-T | B | 89.2/60.3 |

## [RXPLL-B]

| REF NO. | ORDER NO. | DESCRIPTION | | M. | H/V LOCATION |
|---|---|---|---|---|---|
| C359 | 4030006880 | S.CER | C1608 JB 1H 472K-T | B | 92.6/62.1 |
| C360 | 4030006880 | S.CER | C1608 JB 1H 472K-T | B | 89.9/66.9 |
| C361 | 4030006880 | S.CER | C1608 JB 1H 472K-T | T | 89.3/83.4 |
| C363 | 4030006880 | S.CER | C1608 JB 1H 472K-T | T | 86.1/60.9 |
| C364 | 4030017810 | S.CER | C1608 CH 1H 102J-T | T | 86.7/52.3 |
| C365 | 4030006880 | S.CER | C1608 JB 1H 472K-T | T | 90.3/59.9 |
| C421 | 4030006880 | S.CER | C1608 JB 1H 472K-T | T | 94.1/88.5 |
| C423 | 4030006880 | S.CER | C1608 JB 1H 472K-T | T | 94.1/93.3 |
| C426 | 4030006880 | S.CER | C1608 JB 1H 472K-T | B | 94.6/87.3 |
| C427 | 4030006880 | S.CER | C1608 JB 1H 472K-T | T | 92.1/86.5 |
| C441 | 4030007040 | S.CER | C1608 CH 1H 180J-T | T | 94.9/71.3 |
| C442 | 4030007040 | S.CER | C1608 CH 1H 180J-T | T | 94.9/72.6 |
| C443 | 4030007020 | S.CER | C1608 CH 1H 120J-T | T | 92.1/74.2 |
| C444 | 4030007080 | S.CER | C1608 CH 1H 390J-T | T | 94.9/73.9 |
| C445 | 4030011770 | S.CER | C1608 CH 1H 060B-T | T | 94.9/75.2 |
| C446 | 4030007060 | S.CER | C1608 CH 1H 270J-T | T | 94.9/79.1 |
| C447 | 4030007110 | S.CER | C1608 CH 1H 680J-T | T | 92.8/78.9 |
| C448 | 4030006880 | S.CER | C1608 JB 1H 472K-T | T | 94.9/76.5 |
| C449 | 4030006880 | S.CER | C1608 JB 1H 472K-T | T | 88.1/69.1 |
| C451 | 4030007110 | S.CER | C1608 CH 1H 680J-T | T | 92/82.1 |
| C452 | 4030007160 | S.CER | C1608 CH 1H 181J-T | T | 92/80.8 |
| C453 | 4030011600 | S.CER | C1608 JB 1E 104K-T | T | 94.9/77.8 |
| C501 | 4030006880 | S.CER | C1608 JB 1H 472K-T | T | 38.9/131.2 |
| C502 | 4030011600 | S.CER | C1608 JB 1E 104K-T | T | 38.9/129.9 |
| C503 | 4510008540 | S.ELE | EEE1CA100SR | T | 36.6/126.7 |
| C504 | 4030011600 | S.CER | C1608 JB 1E 104K-T | T | 21.4/153.1 |
| C505 | 4550007470 | S.TAN | F931A107MNMBMA | B | 19.2/140.3 |
| C506 | 4030011600 | S.CER | C1608 JB 1E 104K-T | T | 21.4/141 |
| C507 | 4030011600 | S.CER | C1608 JB 1E 104K-T | T | 21.4/137.1 |
| C509 | 4030011600 | S.CER | C1608 JB 1E 104K-T | T | 25.8/132.6 |
| C510 | 4030011600 | S.CER | C1608 JB 1E 104K-T | T | 28.4/132.6 |
| C511 | 4030011600 | S.CER | C1608 JB 1E 104K-T | T | 32.2/132.6 |
| C512 | 4030011600 | S.CER | C1608 JB 1E 104K-T | T | 34.8/132.6 |
| C513 | 4030011600 | S.CER | C1608 JB 1E 104K-T | T | 37.4/132.6 |
| C514 | 4030011600 | S.CER | C1608 JB 1E 104K-T | T | 41.2/136 |
| C515 | 4030011600 | S.CER | C1608 JB 1E 104K-T | T | 41.3/139.7 |
| C516 | 4030011600 | S.CER | C1608 JB 1E 104K-T | T | 41.3/142.3 |
| C517 | 4030011600 | S.CER | C1608 JB 1E 104K-T | T | 37.6/151.8 |
| C518 | 4030011600 | S.CER | C1608 JB 1E 104K-T | T | 34.8/151.8 |
| C519 | 4030011600 | S.CER | C1608 JB 1E 104K-T | T | 31.2/151.8 |
| C520 | 4030011600 | S.CER | C1608 JB 1E 104K-T | T | 23.3/151.9 |
| C521 | 4030011600 | S.CER | C1608 JB 1E 104K-T | T | 41.6/134 |
| C522 | 4550007220 | S.TAN | F931A476MCMBMA | B | 40.7/145 |
| C525 | 4030006880 | S.CER | C1608 JB 1H 472K-T | T | 35.3/154.5 |
| C526 | 4030011600 | S.CER | C1608 JB 1E 104K-T | T | 36.6/154.5 |
| C531 | 4030006880 | S.CER | C1608 JB 1H 472K-T | T | 14.6/137.5 |
| C532 | 4030007070 | S.CER | C1608 CH 1H 330J-T | T | 17.2/137.5 |
| C533 | 4030007110 | S.CER | C1608 CH 1H 680J-T | T | 17.3/133.4 |
| C534 | 4030007110 | S.CER | C1608 CH 1H 680J-T | T | 16.8/130.1 |
| C535 | 4030007070 | S.CER | C1608 CH 1H 330J-T | T | 18.1/127 |
| C536 | 4030006880 | S.CER | C1608 JB 1H 472K-T | T | 20.9/127.6 |
| C537 | 4030006880 | S.CER | C1608 JB 1H 472K-T | T | 27.2/126.4 |
| C540 | 4030006880 | S.CER | C1608 JB 1H 472K-T | B | 56.3/142.8 |
| C541 | 4510008540 | S.ELE | EEE1CA100SR | T | 51/139.3 |
| C542 | 4340000260 | S.MYL | ECPU1C104MA5 | B | 47.8/128.7 |
| C543 | 4030007060 | S.CER | C1608 CH 1H 270J-T | T | 62.2/136.4 |
| C545 | 4030007060 | S.CER | C1608 CH 1H 270J-T | T | 70/137.1 |
| C546 | 4610001830 | S.TRI | TZB4S100AB10R00 (TZBX4N100BA110) | T | 65.8/138.7 |
| C547 | 4030007130 | S.CER | C1608 CH 1H 101J-T | T | 71.3/137.1 |
| C548 | 4030007010 | S.CER | C1608 CH 1H 100D-T | T | 71.3/139.9 |
| C549 | 4030007050 | S.CER | C1608 CH 1H 220J-T | T | 68.9/145.1 |
| C550 | 4030006880 | S.CER | C1608 JB 1H 472K-T | T | 66.3/143 |
| C551 | 4030009520 | S.CER | C1608 CH 1H 020B-T | T | 71.3/142.8 |
| C552 | 4030017810 | S.CER | C1608 CH 1H 102J-T | B | 54.6/139.5 |
| C553 | 4030006880 | S.CER | C1608 JB 1H 472K-T | B | 56.3/139.5 |
| C554 | 4510008500 | S.ELE | EEE1CA101WP | T | 50.9/146.6 |
| C555 | 4030006880 | S.CER | C1608 JB 1H 472K-T | B | 47.7/149.5 |
| C556 | 4550007220 | S.TAN | F931A476MCMBMA | B | 76.4/136.1 |
| C558 | 4550007520 | S.TAN | F931A106MAABMA | B | 43.4/132.5 |
| C559 | 4550007400 | S.TAN | F931A225MAABMA | B | 43.4/129.9 |
| C561 | 4550007520 | S.TAN | F931A106MAABMA | T | 70/157.5 |
| C562 | 4030006880 | S.CER | C1608 JB 1H 472K-T | T | 68.3/155.5 |
| C563 | 4030017810 | S.CER | C1608 CH 1H 102J-T | B | 60.1/158 |
| C564 | 4030006880 | S.CER | C1608 JB 1H 472K-T | B | 58.8/158 |
| C565 | 4510008520 | S.ELE | EEE1CA470SP | T | 50.9/155.6 |
| C566 | 4030006880 | S.CER | C1608 JB 1H 472K-T | T | 64.4/155.5 |
| C571 | 4030006880 | S.CER | C1608 JB 1H 472K-T | B | 58.5/161.3 |
| C573 | 4030007040 | S.CER | C1608 CH 1H 180J-T | B | 72.5/166.8 |
| C574 | 4030009510 | S.CER | C1608 CH 1H 010B-T | T | 72.6/169.1 |
| C575 | 4030007040 | S.CER | C1608 CH 1H 180J-T | T | 72.6/171.9 |
| C580 | 4030006880 | S.CER | C1608 JB 1H 472K-T | T | 41.9/152.4 |
| C581 | 4030006880 | S.CER | C1608 JB 1H 472K-T | T | 41.9/144.2 |
| C591 | 4030006880 | S.CER | C1608 JB 1H 472K-T | T | 63.5/171.2 |
| C592 | 4030007060 | S.CER | C1608 CH 1H 270J-T | T | 62.8/163.1 |
| C593 | 4510008540 | S.ELE | EEE1CA100SR | T | 54.4/170.7 |
| C594 | 4030006880 | S.CER | C1608 JB 1H 472K-T | T | 57.4/171.9 |
| C596 | 4030006880 | S.CER | C1608 JB 1H 472K-T | B | 63.7/168.1 |
| C597 | 4030007050 | S.CER | C1608 CH 1H 220J-T | T | 62.2/171.2 |
| C601 | 4030006880 | S.CER | C1608 JB 1H 472K-T | T | 47.3/116.4 |
| C602 | 4030006880 | S.CER | C1608 JB 1H 472K-T | T | 49.5/121.4 |
| C607 | 4030006880 | S.CER | C1608 JB 1H 472K-T | T | 51.2/115.4 |
| C608 | 4030006880 | S.CER | C1608 JB 1H 472K-T | T | 53.2/115.9 |
| C609 | 4030007100 | S.CER | C1608 CH 1H 560J-T | T | 53.2/114.6 |
| C610 | 4030008750 | S.CER | C1608 CH 1H 360J-T | T | 55.2/115.4 |
| C611 | 4030007140 | S.CER | C1608 CH 1H 121J-T | T | 56.3/113.5 |
| C612 | 4030007020 | S.CER | C1608 CH 1H 120J-T | T | 57.1/114.8 |
| C613 | 4030007110 | S.CER | C1608 CH 1H 680J-T | T | 56.3/112.2 |
| C651 | 4030006880 | S.CER | C1608 JB 1H 472K-T | T | 13.5/174 |
| C652 | 4030011600 | S.CER | C1608 JB 1E 104K-T | T | 12.7/176.3 |
| C653 | 4510008540 | S.ELE | EEE1CA100SR | T | 6.8/172.6 |
| C654 | 4030011600 | S.CER | C1608 JB 1E 104K-T | B | 17.3/170.4 |
| C655 | 4030011600 | S.CER | C1608 JB 1E 104K-T | T | 25.9/161.4 |
| C656 | 4030011600 | S.CER | C1608 JB 1E 104K-T | T | 25.8/177.1 |

M.=Mounted side (T: Mounted on the Top side, B: Mounted on the Bottom side)
S.=Surface mount

## [RXPLL-B]

| REF NO. | ORDER NO. | DESCRIPTION | | M. | H/V LOCATION |
|---|---|---|---|---|---|
| C657 | 4030011600 | S.CER C1608 JB 1E 104K-T | | T | 31.7/169.3 |
| C658 | 4030011600 | S.CER C1608 JB 1E 104K-T | | T | 13.5/172.7 |
| C659 | 4030011600 | S.CER C1608 JB 1E 104K-T | | T | 16.5/163.4 |
| C660 | 4030006880 | S.CER C1608 JB 1H 472K-T | | T | 17.6/161.4 |
| C661 | 4030011600 | S.CER C1608 JB 1E 104K-T | | T | 13.3/166.1 |
| C662 | 4550007220 | S.TAN F931A476MCMBMA | | B | 30.6/170.9 |
| C680 | 4030006880 | S.CER C1608 JB 1H 472K-T | | T | 34.3/177.1 |
| C681 | 4030007160 | S.CER C1608 CH 1H 181J-T | | T | 40.3/177.1 |
| C682 | 4030007140 | S.CER C1608 CH 1H 121J-T | | T | 39.6/175.2 |
| C683 | 4030011330 | S.CER C1608 CH 1H 391J-T | | T | 40.9/175.2 |
| C684 | 4030007080 | S.CER C1608 CH 1H 390J-T | | B | 39.3/174 |
| C685 | 4030011280 | S.CER C1608 CH 1H 271J-T | | B | 42.3/172.6 |
| C686 | 4030010760 | S.CER C1608 CH 1H 331J-T | | B | 39.3/170.6 |
| C687 | 4030018580 | S.CER C1608 CH 1H 821J-T | | T | 41/169.7 |
| C688 | 4030010760 | S.CER C1608 CH 1H 331J-T | | B | 37.5/169.7 |
| C689 | 4030011600 | S.CER C1608 JB 1E 104K-T | | T | 37.4/166.4 |
| C690 | 4030011600 | S.CER C1608 JB 1E 104K-T | | T | 37.4/161.3 |
| C691 | 4030011600 | S.CER C1608 JB 1E 104K-T | | T | 46.4/164 |
| C692 | 4030006880 | S.CER C1608 JB 1H 472K-T | | T | 40.3/162.1 |
| C693 | 4030006880 | S.CER C1608 JB 1H 472K-T | | B | 58.4/169.6 |
| C694 | 4030006880 | S.CER C1608 JB 1H 472K-T | | B | 58.4/164.2 |
| C703 | 4030017810 | S.CER C1608 CH 1H 102J-T | | T | 24.3/116.6 |
| C704 | 4030006880 | S.CER C1608 JB 1H 472K-T | | T | 23/116.6 |
| C705 | 4510008500 | S.ELE EEE1CA101WP | | T | 29.4/118.7 |
| C707 | 4030011600 | S.CER C1608 JB 1E 104K-T | | T | 32.1/113.7 |
| C708 | 4030011600 | S.CER C1608 JB 1E 104K-T | | T | 32.1/108.1 |
| C709 | 4030007070 | S.CER C1608 CH 1H 330J-T | | T | 38.8/112.9 |
| C710 | 4030006880 | S.CER C1608 JB 1H 472K-T | | T | 36.2/112.9 |
| C711 | 4030009540 | S.CER C1608 CH 1H 1R5B-T | | B | 39.3/113.6 |
| C712 | 4030007070 | S.CER C1608 CH 1H 330J-T | | T | 36.2/114.2 |
| C713 | 4030006880 | S.CER C1608 JB 1H 472K-T | | T | 42/118.8 |
| C1000 | 4030007050 | S.CER C1608 CH 1H 220J-T | | B | 177.1/13.8 |
| C1002 | 4030006880 | S.CER C1608 JB 1H 472K-T | | B | 153.1/16.2 |
| C1003 | 4030012600 | S.CER C2012 JB 1A 105M-T | | T | 157.4/8.2 |
| C1004 | 4030011600 | S.CER C1608 JB 1E 104K-T | | B | 169.6/8.7 |
| C1005 | 4030011600 | S.CER C1608 JB 1E 104K-T | | T | 162.8/17.2 |
| C1006 | 4030010210 | S.CER C3216 JB 1C 105M-T | | T | 173.8/18.6 |
| C1007 | 4030006880 | S.CER C1608 JB 1H 472K-T | | T | 172.4/23.9 |
| C1008 | 4030006880 | S.CER C1608 JB 1H 472K-T | | T | 160/24 |
| C1009 | 4030006880 | S.CER C1608 JB 1H 472K-T | | T | 147.6/23.8 |
| C1010 | 4030012600 | S.CER C2012 JB 1A 105M-T | | T | 154.5/28.9 |
| C1011 | 4030012600 | S.CER C2012 JB 1A 105M-T | | T | 144.2/29.3 |
| C1012 | 4030010210 | S.CER C3216 JB 1C 105M-T | | T | 144.8/40.2 |
| C1013 | 4030012600 | S.CER C2012 JB 1A 105M-T | | T | 144.2/33.2 |
| C1014 | 4030018810 | S.CER C3216 CH 1H 333J-T | | B | 151.6/48.3 |
| C1015 | 4030012600 | S.CER C2012 JB 1A 105M-T | | T | 163.6/13.8 |
| C1016 | 4030012600 | S.CER C2012 JB 1A 105M-T | | T | 173.6/33.2 |
| C1017 | 4030012600 | S.CER C2012 JB 1A 105M-T | | T | 163.3/33.2 |
| C1020 | 4030012600 | S.CER C2012 JB 1A 105M-T | | B | 170/38.6 |
| C1021 | 4030012600 | S.CER C2012 JB 1A 105M-T | | B | 154/38.6 |
| C1024 | 4030010210 | S.CER C3216 JB 1C 105M-T | | B | 170.5/45.5 |
| C1025 | 4030010210 | S.CER C3216 JB 1C 105M-T | | B | 154.7/45.5 |
| C1026 | 4030010210 | S.CER C3216 JB 1C 105M-T | | T | 171.4/52.7 |
| C1027 | 4030010210 | S.CER C3216 JB 1C 105M-T | | T | 165.6/52.7 |
| C1028 | 4030006880 | S.CER C1608 JB 1H 472K-T | | B | 156.4/65.4 |
| C1029 | 4030006880 | S.CER C1608 JB 1H 472K-T | | T | 168.5/65.4 |
| C1030 | 4030010210 | S.CER C3216 JB 1C 105M-T | | T | 164.5/18 |
| C1031 | 4030012600 | S.CER C2012 JB 1A 105M-T | | B | 169.2/10.8 |
| C1033 | 4550006470 | S.TAN TEESVB2 1D 106M8R | | B | 146.5/47.7 |
| C1034 | 4550006470 | S.TAN TEESVB2 1D 106M8R | | B | 174/52.1 |
| C1035 | 4550006470 | S.TAN TEESVB2 1D 106M8R | | B | 164.6/15.8 |
| C1036 | 4030007120 | S.CER C1608 CH 1H 820J-T | | T | 160.2/12.7 |
| C1037 | 4030007090 | S.CER C1608 CH 1H 470J-T | | B | 149.3/49.3 |
| C1038 | 4030017810 | S.CER C1608 CH 1H 102J-T | | T | 146.6/26.2 |
| C1039 | 4030017810 | S.CER C1608 CH 1H 102J-T | | T | 146.5/41 |
| C1040 | 4030017810 | S.CER C1608 CH 1H 102J-T | | T | 145.3/36.4 |
| C1041 | 4030006990 | S.CER C1608 CH 1H 080D-T | | B | 153.4/31 |
| C1046 | 4030007010 | S.CER C1608 CH 1H 100D-T | | B | 168.4/53.7 |
| | 4010000120 | CER DD104 SL 100D 50V | [USA] | | |
| | 4010000120 | CER DD104 SL 100D 50V | [EUR] | | |
| | 4010000120 | CER DD104 SL 100D 50V | [ITR] | | |
| | 4010000120 | CER DD104 SL 100D 50V | [UK] | | |
| C1048 | 4030006880 | S.CER C1608 JB 1H 472K-T | | B | 170.6/41.6 |
| C1049 | 4030006880 | S.CER C1608 JB 1H 472K-T | | B | 154.6/41.6 |
| C1050 | 4030017810 | S.CER C1608 CH 1H 102J-T | | B | 170.5/49.5 |
| C1051 | 4030017810 | S.CER C1608 CH 1H 102J-T | | B | 154.7/49.4 |
| C1052 | 4030007060 | S.CER C1608 CH 1H 270J-T | | B | 164.1/29.6 |
| C1053 | 4030007110 | S.CER C1608 CH 1H 680J-T | | T | 175.2/77.3 |
| C1054 | 4030007010 | S.CER C1608 CH 1H 100D-T | | B | 175.7/72.4 |
| C1055 | 4030007140 | S.CER C1608 CH 1H 121J-T | | B | 175.7/74.2 |
| C1056 | 4030007050 | S.CER C1608 CH 1H 220J-T | | T | 175.2/76 |
| C1057 | 4030007130 | S.CER C1608 CH 1H 101J-T | | T | 172.1/77.1 |
| C1058 | 4030009920 | S.CER C1608 CH 1H 050B-T | | B | 173.2/12.7 |
| C1060 | 4030017810 | S.CER C1608 CH 1H 102J-T | | T | 178.6/94.4 |
| C1061 | 4030007090 | S.CER C1608 CH 1H 470J-T | | B | 147.7/91.8 |
| C1062 | 4030007170 | S.CER C1608 CH 1H 221J-T | | B | 149.5/91.8 |
| C1064 | 4030007090 | S.CER C1608 CH 1H 470J-T | | T | 148.7/80.1 |
| C1066 | 4030007010 | S.CER C1608 CH 1H 100D-T | | T | 138.6/81.9 |
| C1067 | 4030007010 | S.CER C1608 CH 1H 100D-T | | T | 173.4/77.1 |
| C1070 | 4030006980 | S.CER C1608 CH 1H 070D-T | | T | 137.2/81.9 |
| C1071 | 4030007100 | S.CER C1608 CH 1H 560J-T | | B | 162.2/75.3 |
| C1072 | 4030007170 | S.CER C1608 CH 1H 221J-T | | B | 162/78.7 |
| C1073 | 4030007080 | S.CER C1608 CH 1H 390J-T | | B | 164.1/76.4 |
| C1074 | 4030007060 | S.CER C1608 CH 1H 270J-T | | T | 148.7/78.6 |
| C1081 | 4030006900 | S.CER C1608 JB 1H 103K-T | | B | 156.1/86 |
| C1082 | 4030006900 | S.CER C1608 JB 1H 103K-T | | B | 151.3/91.8 |
| C1083 | 4030006900 | S.CER C1608 JB 1H 103K-T | | B | 151.2/81.6 |
| C1084 | 4030006880 | S.CER C1608 JB 1H 472K-T | | B | 149.4/81.6 |
| C1085 | 4030006880 | S.CER C1608 JB 1H 472K-T | | B | 153/81.6 |
| C1091 | 4030006880 | S.CER C1608 JB 1H 472K-T | | T | 149.3/149.4 |
| C1092 | 4030006880 | S.CER C1608 JB 1H 472K-T | | T | 147/138.5 |
| C1093 | 4030006880 | S.CER C1608 JB 1H 472K-T | | T | 161.3/135.8 |
| C1101 | 4030006900 | S.CER C1608 JB 1H 103K-T | | T | 177/90.9 |
| C1102 | 4030006900 | S.CER C1608 JB 1H 103K-T | | T | 175.4/115.5 |

## [RXPLL-B]

| REF NO. | ORDER NO. | DESCRIPTION | M. | H/V LOCATION |
|---|---|---|---|---|
| C1103 | 4030011600 | S.CER C1608 JB 1E 104K-T | T | 179.6/116.4 |
| C1104 | 4030011600 | S.CER C1608 JB 1E 104K-T | T | 175.4/87.7 |
| C1106 | 4030011600 | S.CER C1608 JB 1E 104K-T | T | 179.3/128.8 |
| C1107 | 4030011600 | S.CER C1608 JB 1E 104K-T | B | 172.3/124.2 |
| C1109 | 4030007090 | S.CER C1608 CH 1H 470J-T | T | 175.7/137.9 |
| C1110 | 4030006900 | S.CER C1608 JB 1H 103K-T | T | 175.7/136.6 |
| C1111 | 4030011600 | S.CER C1608 JB 1E 104K-T | T | 176.7/132 |
| C1112 | 4030006900 | S.CER C1608 JB 1H 103K-T | T | 179.3/132 |
| C1113 | 4030007090 | S.CER C1608 CH 1H 470J-T | T | 178.6/140.9 |
| C1114 | 4030006900 | S.CER C1608 JB 1H 103K-T | B | 178.4/138 |
| C1115 | 4030011600 | S.CER C1608 JB 1E 104K-T | T | 175.7/140 |
| C1116 | 4030006900 | S.CER C1608 JB 1H 103K-T | T | 165.7/138.7 |
| C1117 | 4030007010 | S.CER C1608 CH 1H 100D-T | T | 169.7/142.2 |
| C1118 | 4030011600 | S.CER C1608 JB 1E 104K-T | T | 171/142.2 |
| C1119 | 4030006880 | S.CER C1608 JB 1H 472K-T | T | 171.9/146.6 |
| C1120 | 4030006880 | S.CER C1608 JB 1H 472K-T | T | 171.9/148.4 |
| C1121 | 4030011600 | S.CER C1608 JB 1E 104K-T | T | 180.6/147.7 |
| C1122 | 4030009530 | S.CER C1608 CH 1H 030B-T | T | 178.2/120.3 |
| C1123 | 4030006900 | S.CER C1608 JB 1H 103K-T | T | 182.1/100.9 |
| C1124 | 4030006900 | S.CER C1608 JB 1H 103K-T | T | 175.3/105.9 |
| C1125 | 4030006900 | S.CER C1608 JB 1H 103K-T | T | 175.5/85.1 |
| C1126 | 4030011600 | S.CER C1608 JB 1E 104K-T | T | 173.4/131.1 |
| C1151 | 4030007110 | S.CER C1608 CH 1H 680J-T | B | 123.1/64 |
| C1152 | 4030007110 | S.CER C1608 CH 1H 680J-T | B | 123.1/57 |
| C1153 | 4030017810 | S.CER C1608 CH 1H 102J-T | T | 131.5/63.9 |
| C1201 | 4030007110 | S.CER C1608 CH 1H 680J-T | B | 120.2/21.8 |
| C1202 | 4030007110 | S.CER C1608 CH 1H 680J-T | B | 118.4/21.8 |
| C1207 | 4030006880 | S.CER C1608 JB 1H 472K-T | B | 123/11.8 |
| C1226 | 4030009500 | S.CER C1608 CH 1H 0R5B-T | B | 124.9/35.6 |
| C1227 | 4030009500 | S.CER C1608 CH 1H 0R5B-T | B | 115.4/35.6 |
| C1228 | 4030009920 | S.CER C1608 CH 1H 050B-T | B | 113.9/41.8 |
| C1231 | 4030006900 | S.CER C1608 JB 1H 103K-T | T | 118.9/21.5 |
| C1232 | 4030006900 | S.CER C1608 JB 1H 103K-T | T | 109/21.5 |
| C1234 | 4030006900 | S.CER C1608 JB 1H 103K-T | B | 123.5/38.3 |
| C1235 | 4030006880 | S.CER C1608 JB 1H 472K-T | B | 116.6/32.1 |
| C1236 | 4030006900 | S.CER C1608 JB 1H 103K-T | T | 119.8/40 |
| C1238 | 4030006900 | S.CER C1608 JB 1H 103K-T | B | 114/38.3 |
| C1239 | 4030006880 | S.CER C1608 JB 1H 472K-T | B | 106.8/32.3 |
| C1240 | 4030006900 | S.CER C1608 JB 1H 103K-T | T | 111.7/40.5 |
| C1241 | 4030006900 | S.CER C1608 JB 1H 103K-T | T | 113.6/38.6 |
| C1243 | 4030006880 | S.CER C1608 JB 1H 472K-T | B | 129.6/46.7 |
| C1244 | 4030007080 | S.CER C1608 CH 1H 390J-T | T | 149.6/67 |
| C1245 | 4030007130 | S.CER C1608 CH 1H 101J-T | T | 151/64.4 |
| C1246 | 4030007120 | S.CER C1608 CH 1H 820J-T | T | 150.9/67 |
| C1247 | 4030007090 | S.CER C1608 CH 1H 470J-T | T | 153.4/63.5 |
| C1248 | 4030007130 | S.CER C1608 CH 1H 101J-T | T | 153.4/66.8 |
| C1249 | 4030007020 | S.CER C1608 CH 1H 120J-T | T | 153.1/70.3 |
| C1250 | 4030007100 | S.CER C1608 CH 1H 560J-T | B | 152.4/74.3 |
| C1251 | 4030006900 | S.CER C1608 JB 1H 103K-T | T | 160.2/92.9 |
| C1252 | 4030006900 | S.CER C1608 JB 1H 103K-T | T | 152.7/92.9 |
| C1253 | 4030006900 | S.CER C1608 JB 1H 103K-T | B | 152.5/111.2 |
| C1255 | 4030017810 | S.CER C1608 CH 1H 102J-T | B | 155.7/99.3 |
| C1256 | 4030007010 | S.CER C1608 CH 1H 100D-T | T | 156.3/98.8 |
| C1257 | 4030011600 | S.CER C1608 JB 1E 104K-T | B | 155.7/103 |
| C1258 | 4030007080 | S.CER C1608 CH 1H 390J-T | B | 152/97.5 |
| C1264 | 4030007110 | S.CER C1608 CH 1H 680J-T | T | 122/51.1 |
| C1265 | 4610001830 | S.TRI TZB4S100AB10R00 (TZBX4N100BA110) | T | 163.8/70.8 |
| C1266 | 4030007020 | S.CER C1608 CH 1H 120J-T | T | 160.1/74.5 |
| C1267 | 4030006880 | S.CER C1608 JB 1H 472K-T | B | 157/126.4 |
| C1268 | 4030006980 | S.CER C1608 CH 1H 070D-T | T | 149.6/64.4 |
| C1302 | 4030007060 | S.CER C1608 CH 1H 270J-T | T | 159.3/111 |
| C1303 | 4030006980 | S.CER C1608 CH 1H 070D-T | T | 159.3/112.9 |
| C1304 | 4030007070 | S.CER C1608 CH 1H 330J-T | T | 159.3/114.2 |
| C1305 | 4030007010 | S.CER C1608 CH 1H 100D-T | T | 153.5/114.6 |
| C1306 | 4030009650 | S.CER C1608 CH 1H 240J-T | T | 159.3/115.5 |
| C1307 | 4030007030 | S.CER C1608 CH 1H 150J-T | T | 153.5/120.2 |
| C1308 | 4030006900 | S.CER C1608 JB 1H 103K-T | T | 155.1/127.1 |
| C1309 | 4030007080 | S.CER C1608 CH 1H 390J-T | T | 156.5/125.8 |
| C1310 | 4030007080 | S.CER C1608 CH 1H 390J-T | T | 159.1/128.4 |
| C1311 | 4030006900 | S.CER C1608 JB 1H 103K-T | B | 149/118.9 |
| C1312 | 4030007060 | S.CER C1608 CH 1H 270J-T | T | 155.5/111.7 |
| C1313 | 4030007060 | S.CER C1608 CH 1H 270J-T | T | 159.1/127.1 |
| C1355 | 4030006880 | S.CER C1608 JB 1H 472K-T | T | 144.7/70 |
| C1357 | 4030007000 | S.CER C1608 CH 1H 090D-T | B | 144.6/67.1 |
| C1358 | 4030011600 | S.CER C1608 JB 1E 104K-T | B | 139.1/70.4 |
| C1360 | 4030011600 | S.CER C1608 JB 1E 104K-T | B | 146.4/70.4 |
| C1361 | 4030007020 | S.CER C1608 CH 1H 120J-T | B | 137.7/69.5 |
| C1362 | 4030011600 | S.CER C1608 JB 1E 104K-T | T | 137.5/65.6 |
| C1403 | 4030017810 | S.CER C1608 CH 1H 102J-T | T | 114.7/70.3 |
| C1404 | 4030017810 | S.CER C1608 CH 1H 102J-T | T | 116.3/104.8 |
| C1405 | 4030006900 | S.CER C1608 JB 1H 103K-T | B | 115.9/63.9 |
| C1406 | 4030017810 | S.CER C1608 CH 1H 102J-T | T | 114.2/66.2 |
| C1407 | 4030017810 | S.CER C1608 CH 1H 102J-T | T | 119.9/70.3 |
| C1408 | 4030006900 | S.CER C1608 JB 1H 103K-T | T | 116.3/73 |
| C1409 | 4030006900 | S.CER C1608 JB 1H 103K-T | T | 114.4/68.1 |
| C1410 | 4030007030 | S.CER C1608 CH 1H 150J-T | T | 116.3/83.3 |
| C1411 | 4030006990 | S.CER C1608 CH 1H 080D-T | T | 112.2/87.8 |
| C1412 | 4030007030 | S.CER C1608 CH 1H 150J-T | T | 116.3/93.7 |
| C1413 | 4030007020 | S.CER C1608 CH 1H 120J-T | T | 107/83.3 |
| C1414 | 4030006990 | S.CER C1608 CH 1H 080D-T | T | 103.6/86.6 |
| C1415 | 4030007020 | S.CER C1608 CH 1H 120J-T | T | 107/93.7 |
| C1416 | 4030006900 | S.CER C1608 JB 1H 103K-T | T | 113.2/103.4 |
| C1417 | 4030006900 | S.CER C1608 JB 1H 103K-T | T | 110.5/107.6 |
| C1418 | 4030017810 | S.CER C1608 CH 1H 102J-T | T | 110.4/105.8 |
| C1419 | 4030017810 | S.CER C1608 CH 1H 102J-T | T | 111/108.9 |
| C1420 | 4030007120 | S.CER C1608 CH 1H 820J-T | B | 113.2/114.2 |
| C1421 | 4030007150 | S.CER C1608 CH 1H 151J-T | B | 115/114.2 |
| C1423 | 4030010750 | S.CER C1608 CH 1H 201J-T | B | 120.3/111.1 |
| C1424 | 4030007010 | S.CER C1608 CH 1H 100D-T | T | 132.8/103.3 |
| C1425 | 4030011600 | S.CER C1608 JB 1E 104K-T | T | 136.5/106.2 |
| C1426 | 4030011600 | S.CER C1608 JB 1E 104K-T | T | 137.8/106.2 |
| C1427 | 4030006900 | S.CER C1608 JB 1H 103K-T | T | 133.9/106.2 |
| C1428 | 4030006980 | S.CER C1608 CH 1H 070D-T | T | 119.5/109 |

M.=Mounted side (T: Mounted on the Top side, B: Mounted on the Bottom side)
S.=Surface mount

## [RXPLL-B UNIT]

| REF NO. | ORDER NO. | DESCRIPTION | M. | H/V LOCATION |
|---|---|---|---|---|
| C1429 | 4030006900 | S.CER C1608 JB 1H 103K-T | T | 120.5/113.6 |
| C1430 | 4030007040 | S.CER C1608 CH 1H 180J-T | B | 131.9/115.3 |
| C1431 | 4030017810 | S.CER C1608 CH 1H 102J-T | T | 127/116.2 |
| C1432 | 4030009980 | S.CER C1608 JB 1H 152K-T | T | 129.1/114.1 |
| C1433 | 4030011600 | S.CER C1608 JB 1E 104K-T | T | 130.4/114.1 |
| C1434 | 4030009920 | S.CER C1608 CH 1H 050B-T | B | 124.7/134.4 |
| C1435 | 4030009920 | S.CER C1608 CH 1H 050B-T | B | 124.7/131.6 |
| C1436 | 4030011600 | S.CER C1608 JB 1E 104K-T | B | 137.2/122.2 |
| C1437 | 4030009920 | S.CER C1608 CH 1H 050B-T | T | 104/83.3 |
| C1438 | 4030009920 | S.CER C1608 CH 1H 050B-T | T | 102.3/86.6 |
| C1439 | 4030009920 | S.CER C1608 CH 1H 050B-T | T | 110/93.7 |
| C1441 | 4030006880 | S.CER C1608 JB 1H 472K-T | T | 120.5/116.2 |
| C1451 | 4030007020 | S.CER C1608 CH 1H 120J-T | T | 125.5/80.1 |
| C1453 | 4030007030 | S.CER C1608 CH 1H 150J-T | T | 122.1/85.1 |
| C1454 | 4030007030 | S.CER C1608 CH 1H 150J-T | T | 120.8/85.1 |
| C1456 | 4030007020 | S.CER C1608 CH 1H 120J-T | T | 125.5/90.9 |
| C1457 | 4030006900 | S.CER C1608 JB 1H 103K-T | T | 118.3/72.9 |
| C1458 | 4030006900 | S.CER C1608 JB 1H 103K-T | T | 116.6/103.5 |
| C1501 | 4030018530 | S.CER C3216 CH 1H 103J-T | T | 131.2/124.5 |
| C1502 | 4550003220 | S.TAN TEESVA 1E 105M8R | T | 132.1/139.2 |
| C1503 | 4030006900 | S.CER C1608 JB 1H 103K-T | T | 137/142.1 |
| C1504 | 4030012610 | S.CER C2012 JB 1C 474K-T | T | 136.7/140.5 |
| C1505 | 4030007010 | S.CER C1608 CH 1H 100D-T | T | 130/143.5 |
| C1506 | 4030010760 | S.CER C1608 CH 1H 331J-T | T | 131.3/146.3 |
| C1507 | 4510008540 | S.ELE EEE1CA100SR | T | 142.6/140.8 |
| C1508 | 4030011600 | S.CER C1608 JB 1E 104K-T | B | 128.8/148.8 |
| C1509 | 4030018800 | S.CER C3216 CH 1H 223J-T | T | 135.8/145.1 |
| C1510 | 4030007110 | S.CER C1608 CH 1H 680J-T | T | 136.5/158.9 |
| C1511 | 4510008540 | S.ELE EEE1CA100SR | T | 132.7/150.6 |
| C1512 | 4030011600 | S.CER C1608 JB 1E 104K-T | T | 129.6/149 |
| C1513 | 4030011600 | S.CER C1608 JB 1E 104K-T | T | 129.6/158.1 |
| C1514 | 4510008540 | S.ELE EEE1CA100SR | T | 132.7/156.5 |
| C1515 | 4030007160 | S.CER C1608 CH 1H 181J-T | T | 132.2/160.8 |
| C1516 | 4030009350 | S.CER C1608 CH 1H 3R5B-T | T | 130.9/160.8 |
| C1517 | 4030007110 | S.CER C1608 CH 1H 680J-T | T | 115.3/155 |
| C1518 | 4030018530 | S.CER C3216 CH 1H 103J-T | T | 131.2/132.8 |
| C1519 | 4550003220 | S.TAN TEESVA 1E 105M8R | T | 122.9/140.9 |
| C1520 | 4030006900 | S.CER C1608 JB 1H 103K-T | T | 119.8/140.7 |
| C1521 | 4030012610 | S.CER C2012 JB 1C 474K-T | T | 116.2/142.1 |
| C1522 | 4030007010 | S.CER C1608 CH 1H 100D-T | T | 123.7/143.5 |
| C1523 | 4030010760 | S.CER C1608 CH 1H 331J-T | T | 122.4/146.3 |
| C1524 | 4030018800 | S.CER C3216 CH 1H 223J-T | T | 117.9/145.2 |
| C1525 | 4510008540 | S.ELE EEE1CA100SR | T | 124.9/150.6 |
| C1526 | 4030011600 | S.CER C1608 JB 1E 104K-T | T | 128/149 |
| C1527 | 4030011600 | S.CER C1608 JB 1E 104K-T | T | 128/158.1 |
| C1528 | 4510008540 | S.ELE EEE1CA100SR | T | 124.9/156.5 |
| C1529 | 4030017870 | S.CER C1608 CH 1H 681J-T | T | 125.4/160.8 |
| C1530 | 4030011330 | S.CER C1608 CH 1H 391J-T | T | 126.7/160.8 |
| C1531 | 4510008500 | S.ELE EEE1CA101WP | T | 111.3/167.3 |
| C1532 | 4030011600 | S.CER C1608 JB 1E 104K-T | T | 107.1/167.3 |
| C1533 | 4030011600 | S.CER C1608 JB 1E 104K-T | T | 115.5/167.3 |
| C1534 | 4510008500 | S.ELE EEE1CA101WP | T | 119.7/167.3 |
| C1535 | 4030011600 | S.CER C1608 JB 1E 104K-T | T | 133.7/172.6 |
| C1536 | 4030017870 | S.CER C1608 CH 1H 681J-T | T | 126.2/179.5 |
| C1537 | 4510008500 | S.ELE EEE1CA101WP | T | 111.3/176 |
| C1538 | 4030011600 | S.CER C1608 JB 1E 104K-T | T | 107.1/176 |
| C1539 | 4030011600 | S.CER C1608 JB 1E 104K-T | T | 115.5/176 |
| C1540 | 4510008500 | S.ELE EEE1CA101WP | T | 119.7/176 |
| C1541 | 4030007050 | S.CER C1608 CH 1H 220J-T | T | 124/175 |
| C1651 | 4030006880 | S.CER C1608 JB 1H 472K-T | B | 105.5/144 |
| C1653 | 4030006880 | S.CER C1608 JB 1H 472K-T | B | 109/137.2 |
| C1654 | 4030017810 | S.CER C1608 CH 1H 102J-T | B | 106.9/137.2 |
| C1655 | 4030009530 | S.CER C1608 CH 1H 030B-T | T | 107.6/136.8 |
| C1656 | 4610001970 | S.TRI TZC3P200A110R00 (TZC03P200A1102) | T | 110.9/136.2 |
| C1657 | 4030010220 | S.CER C2012 CH 1H 102J-T | T | 116.4/122.7 |
| C1658 | 4030010220 | S.CER C2012 CH 1H 102J-T | T | 116.4/130.9 |
| C1659 | 4030011600 | S.CER C1608 JB 1E 104K-T | T | 107.8/120 |
| C1660 | 4030011600 | S.CER C1608 JB 1E 104K-T | B | 134/174 |
| C1661 | 4030011600 | S.CER C1608 JB 1E 104K-T | B | 145.2/171.3 |
| C1662 | 4030011600 | S.CER C1608 JB 1E 104K-T | T | 144.3/178 |
| C1663 | 4030011600 | S.CER C1608 JB 1E 104K-T | T | 135.1/170.2 |
| C1665 | 4030006900 | S.CER C1608 JB 1H 103K-T | T | 138.9/164.1 |
| C1666 | 4030006880 | S.CER C1608 JB 1H 472K-T | B | 113.3/144 |
| C1701 | 4030011600 | S.CER C1608 JB 1E 104K-T | T | 153.4/163 |
| C1702 | 4030011600 | S.CER C1608 JB 1E 104K-T | T | 144.4/163 |
| C1703 | 4510004601 | ELE 16 ME 1000 HC | | |
| C1704 | 4030011600 | S.CER C1608 JB 1E 104K-T | B | 180.1/160.2 |
| C1705 | 4030011600 | S.CER C1608 JB 1E 104K-T | B | 186.4/160.2 |
| C1706 | 4510008520 | S.ELE EEE1CA470SP | T | 172.7/154.8 |
| C1707 | 4030011600 | S.CER C1608 JB 1E 104K-T | T | 149.7/154.8 |
| C1708 | 4030006880 | S.CER C1608 JB 1H 472K-T | T | 175.7/166.8 |
| C1709 | 4030006880 | S.CER C1608 JB 1H 472K-T | T | 172.6/166.8 |
| C1710 | 4030006880 | S.CER C1608 JB 1H 472K-T | T | 169.6/166.8 |
| C1711 | 4030011340 | S.CER C1608 CH 1H 471J-T | T | 171.4/163.5 |
| C1712 | 4030011340 | S.CER C1608 CH 1H 471J-T | T | 167.5/163.5 |
| C1713 | 4030006880 | S.CER C1608 JB 1H 472K-T | B | 165.5/168.8 |
| C1714 | 4030006880 | S.CER C1608 JB 1H 472K-T | B | 153.8/141.8 |
| C1716 | 4030006880 | S.CER C1608 JB 1H 472K-T | B | 154.7/145.1 |
| C1717 | 4030006880 | S.CER C1608 JB 1H 472K-T | B | 152.9/145.1 |
| C1719 | 4030006880 | S.CER C1608 JB 1H 472K-T | B | 151.1/145.1 |
| C1720 | 4030006880 | S.CER C1608 JB 1H 472K-T | B | 155.6/141.8 |
| C1721 | 4030006880 | S.CER C1608 JB 1H 472K-T | B | 157.4/141.8 |
| RL1001 | 6330001750 | REL FTR-B4CA012Z | | |
| RL1002 | 6330001750 | REL FTR-B4CA012Z | | |
| RL1003 | 6330001750 | REL FTR-B4CA012Z | | |
| RL1004 | 6330001750 | REL FTR-B4CA012Z | | |
| RL1005 | 6330001750 | REL FTR-B4CA012Z | | |
| RL1006 | 6330001750 | REL FTR-B4CA012Z | | |
| RL1203 | 6330001750 | REL FTR-B4CA012Z | | |
| RL1206 | 6330001750 | REL FTR-B4CA012Z | | |

## [RXPLL-B UNIT]

| REF NO. | ORDER NO. | DESCRIPTION | M. | H/V LOCATION |
|---|---|---|---|---|
| J2 | 6510019991 | S.CON 52808-2271(2291) | T | 25/9 |
| J10 | 6510007020 | CON TMP-J01X-V6 | | |
| J351 | 6510007020 | CON TMP-J01X-V6 | | |
| J561 | 6510007020 | CON TMP-J01X-V6 | | |
| J601 | 6510007020 | CON TMP-J01X-V6 | | |
| J681 | 6510007020 | CON TMP-J01X-V6 | | |
| J831 | 6510007020 | CON TMP-J01X-V6 | | |
| J1002 | 6510007020 | CON TMP-J01X-V6 | | |
| J1101 | 6510007020 | CON TMP-J01X-V6 | | |
| J1201 | 6510007020 | CON TMP-J01X-V6 | | |
| J1301 | 6510007020 | CON TMP-J01X-V6 | | |
| J1501 | 6510018961 | S.CON B2B-PH-SM4-TB(LF)(SN) | T | 149.6/177.5 |
| J1701 | 6510019981 | S.CON 52808-1671(1690) | T | 168/177.2 |
| W1052 | 9016201006 | WIR 73/98/025/X98/X98 | | |
| W1401 | 9029495075 | JUM 73/98/020/X98/X98 | | |
| W1411 | 7120000480 | S.JUM MJP-0.4-T () | T | 125.1/111.6 |
| EP20 | 6910012350 | S.BEA MMZ1608Y 102BT | T | 85.4/126 |
| EP21 | 6910012350 | S.BEA MMZ1608Y 102BT | T | 88.7/124 |
| EP22 | 6910012350 | S.BEA MMZ1608Y 102BT | T | 90/124 |
| EP101 | 6910012350 | S.BEA MMZ1608Y 102BT | B | 47.6/98.6 |
| EP102 | 6910012350 | S.BEA MMZ1608Y 102BT | B | 47.6/96.8 |
| EP103 | 6910012350 | S.BEA MMZ1608Y 102BT | T | 46/96.8 |
| EP104 | 6910012350 | S.BEA MMZ1608Y 102BT | T | 46/92.9 |
| EP105 | 6910012350 | S.BEA MMZ1608Y 102BT | T | 46/91.6 |
| EP106 | 6910012350 | S.BEA MMZ1608Y 102BT | T | 46/89 |
| EP107 | 6910012350 | S.BEA MMZ1608Y 102BT | B | 47.6/100.4 |
| EP1701 | 6910012350 | S.BEA MMZ1608Y 102BT | T | 170.1/163.5 |
| EP1702 | 6910012350 | S.BEA MMZ1608Y 102BT | T | 168.8/163.5 |
| EP1801 | 6910012350 | S.BEA MMZ1608Y 102BT | B | 153/132.7 |
| EP1802 | 6910012350 | S.BEA MMZ1608Y 102BT | B | 142.5/18.8 |
| EP1804 | 6910012350 | S.BEA MMZ1608Y 102BT | B | 112.5/138.7 |
| EP1805 | 6910012350 | S.BEA MMZ1608Y 102BT | B | 150.2/141.8 |
| EP1806 | 6910012350 | S.BEA MMZ1608Y 102BT | B | 128.6/64.3 |
| EP1807 | 6910012350 | S.BEA MMZ1608Y 102BT | B | 117.4/50.2 |
| EP1808 | 6910012350 | S.BEA MMZ1608Y 102BT | B | 137/166.9 |
| EP1809 | 6910012350 | S.BEA MMZ1608Y 102BT | B | 147.4/127.4 |
| EP1810 | 6910012350 | S.BEA MMZ1608Y 102BT | B | 131.3/64.2 |
| EP1811 | 6910012350 | S.BEA MMZ1608Y 102BT | T | 160.7/56.3 |
| EP1812 | 6910012350 | S.BEA MMZ1608Y 102BT | B | 153.5/137.4 |
| EP1813 | 6910012350 | S.BEA MMZ1608Y 102BT | B | 132.6/65.7 |
| EP1814 | 6910012350 | S.BEA MMZ1608Y 102BT | B | 147.2/22.3 |
| EP1815 | 6910012350 | S.BEA MMZ1608Y 102BT | B | 156/62.6 |
| EP1816 | 6910012350 | S.BEA MMZ1608Y 102BT | B | 160.4/20.9 |
| EP1817 | 6910012350 | S.BEA MMZ1608Y 102BT | B | 168.6/62.2 |
| EP1818 | 6910012350 | S.BEA MMZ1608Y 102BT | B | 151.2/133.2 |
| EP1819 | 6910012350 | S.BEA MMZ1608Y 102BT | B | 145.6/127.9 |
| EP1820 | 6910012350 | S.BEA MMZ1608Y 102BT | B | 148.6/19.8 |
| EP1821 | 6910012350 | S.BEA MMZ1608Y 102BT | B | 148.6/14.1 |
| EP1825 | 6910012350 | S.BEA MMZ1608Y 102BT | B | 126.6/7 |
| EP1826 | 6910012350 | S.BEA MMZ1608Y 102BT | B | 151.5/137.7 |
| EP1830 | 6910012350 | S.BEA MMZ1608Y 102BT | B | 141.3/135.2 |
| EP1831 | 6910012350 | S.BEA MMZ1608Y 102BT | B | 143.4/128.5 |
| EP1832 | 6910012350 | S.BEA MMZ1608Y 102BT | B | 149.2/137.5 |
| EP1833 | 6910012350 | S.BEA MMZ1608Y 102BT | B | 147.2/133.5 |
| EP1834 | 6910012350 | S.BEA MMZ1608Y 102BT | T | 115.8/108.3 |
| EP1835 | 6910012350 | S.BEA MMZ1608Y 102BT | B | 141.6/128.5 |
| EP1836 | 6910012350 | S.BEA MMZ1608Y 102BT | T | 111/110.2 |
| EP1837 | 6910012350 | S.BEA MMZ1608Y 102BT | B | 145.8/134.1 |
| EP1838 | 6910012350 | S.BEA MMZ1608Y 102BT | T | 116.3/106.1 |
| EP9000 | 9026301001 | TUB 0.7 L=14MM [USA] | | |
| | 9026301001 | TUB 0.7 L=14MM [EUR] | | |
| | 9026301001 | TUB 0.7 L=14MM [UK] | | |

M.=Mounted side (T: Mounted on the Top side, B: Mounted on the Bottom side)
S.=Surface mount

## [BPF UNIT]

| REF NO. | ORDER NO. | DESCRIPTION | | M. | H/V LOCATION |
|---|---|---|---|---|---|
| IC101 | 1130011510 | S.IC | BU2099FV-E2 | T | 9.5/77.6 |
| IC102 | 1130011510 | S.IC | BU2099FV-E2 | T | 9.7/100.9 |
| IC401 | 1130011510 | S.IC | BU2099FV-E2 | T | 10.3/39.3 |
| IC402 | 1130011510 | S.IC | BU2099FV-E2 | T | 9.6/59.4 |
| Q355 | 1590001330 | S.TR | DTA114EUA T106 | T | 191.6/68.1 |
| Q381 | 1590000680 | S.TR | DTC114EUA T106 | T | 232/60.3 |
| Q383 | 1590000680 | S.TR | DTC114EUA T106 | T | 229.2/51.9 |
| Q384 | 1590000680 | S.TR | DTC114EUA T106 | T | 226.2/51.9 |
| Q385 | 1590000680 | S.TR | DTC114EUA T106 | T | 233.1/54.7 |
| Q386 | 1590000430 | S.TR | DTC144EUA T106 | T | 230.1/54.7 |
| Q387 | 1590000680 | S.TR | DTC114EUA T106 | T | 228.8/60.2 |
| Q401 | 1530002841 | S.TR | 2SC4116-Y (TE85R,F) | T | 234.5/108.2 |
| Q402 | 1530002060 | S.TR | 2SC4081 T106 R | B | 224.2/99.2 |
| Q403 | 1590001330 | S.TR | DTA114EUA T106 | B | 227.6/100.2 |
| Q404 | 1590000430 | S.TR | DTC144EUA T106 | T | 232/108.2 |
| Q855 | 1590001330 | S.TR | DTA114EUA T106 | T | 192/53 |
| Q871 | 1590001330 | S.TR | DTA114EUA T106 | B | 234.6/18.8 |
| Q872 | 1530002060 | S.TR | 2SC4081 T106 R | B | 231.2/19.5 |
| Q873 | 1530002841 | S.TR | 2SC4116-Y (TE85R,F) | B | 231.2/16.6 |
| Q874 | 1590000430 | S.TR | DTC144EUA T106 | T | 195.7/57.4 |
| Q900 | 1590001330 | S.TR | DTA114EUA T106 | B | 217.4/116.1 |
| Q901 | 1530003851 | S.TR | 2SC5551A-F-E | T | 210.3/113.5 |
| Q902 | 1590001330 | S.TR | DTA114EUA T106 | T | 200.6/115.1 |
| Q903 | 1530003851 | S.TR | 2SC5551A-F-E | T | 189.4/113.5 |
| Q950 | 1590001330 | S.TR | DTA114EUA T106 | B | 215/3.2 |
| Q951 | 1530003851 | S.TR | 2SC5551A-F-E | T | 209.8/17.6 |
| Q952 | 1590001330 | S.TR | DTA114EUA T106 | B | 199.1/4 |
| Q953 | 1530003851 | S.TR | 2SC5551A-F-E | T | 188.6/17.6 |
| D1 | 1790001250 | S.DIO | MA2S1110G-(TX) | T | 184/75.2 |
| D21 | 1790001250 | S.DIO | MA2S1110G-(TX) | B | 167.1/77.7 |
| D51 | 1790001250 | S.DIO | MA2S1110G-(TX) | T | 163.7/68.6 |
| D81 | 1790001250 | S.DIO | MA2S1110G-(TX) | B | 141.5/68.1 |
| D111 | 1790001250 | S.DIO | MA2S1110G-(TX) | T | 107.4/67.6 |
| D141 | 1790001250 | S.DIO | MA2S1110G-(TX) | T | 94.7/70.3 |
| D171 | 1790001250 | S.DIO | MA2S1110G-(TX) | B | 81.6/74.3 |
| D201 | 1790001250 | S.DIO | MA2S1110G-(TX) | B | 70.2/73.1 |
| D231 | 1790001250 | S.DIO | MA2S1110G-(TX) | T | 49.4/69.1 |
| D261 | 1790001250 | S.DIO | MA2S1110G-(TX) | B | 35.4/70.1 |
| D291 | 1790001250 | S.DIO | MA2S1110G-(TX) | B | 203.9/71.9 |
| D321 | 1790001250 | S.DIO | MA2S1110G-(TX) | T | 204/97.5 |
| D351 | 1790001250 | S.DIO | MA2S1110G-(TX) | T | 189/94.9 |
| D352 | 1790001250 | S.DIO | MA2S1110G-(TX) | T | 189/88.7 |
| D353 | 1790001250 | S.DIO | MA2S1110G-(TX) | T | 189/82.5 |
| D354 | 1790001250 | S.DIO | MA2S1110G-(TX) | T | 189/76.3 |
| D355 | 1790001250 | S.DIO | MA2S1110G-(TX) | T | 193.9/66.2 |
| D371 | 1790001250 | S.DIO | MA2S1110G-(TX) | T | 218.5/69.9 |
| D373 | 1790001250 | S.DIO | MA2S1110G-(TX) | B | 239.8/116.1 |
| D391 | 1750000581 | S.DIO | 1SV307 (TPH3,F) | B | 233.2/49.9 |
| D392 | 1750000581 | S.DIO | 1SV307 (TPH3,F) | B | 236/52.9 |
| D393 | 1750000581 | S.DIO | 1SV307 (TPH3,F) | B | 235.3/63.7 |
| D401 | 1790001250 | S.DIO | MA2S1110G-(TX) | B | 225.6/95.5 |
| D402 | 1790000980 | S.DIO | MA3J7420GL (TX) | B | 233.9/113.2 |
| D501 | 1790001250 | S.DIO | MA2S1110G-(TX) | B | 184.1/45.6 |
| D531 | 1790001250 | S.DIO | MA2S1110G-(TX) | B | 167.7/53.7 |
| D561 | 1790001250 | S.DIO | MA2S1110G-(TX) | B | 164.4/42.5 |
| D591 | 1790001250 | S.DIO | MA2S1110G-(TX) | B | 144.1/53.4 |
| D621 | 1790001250 | S.DIO | MA2S1110G-(TX) | T | 107.6/52.6 |
| D651 | 1790001250 | S.DIO | MA2S1110G-(TX) | T | 94.9/49.6 |
| D681 | 1790001250 | S.DIO | MA2S1110G-(TX) | B | 81.5/45.7 |
| D711 | 1790001250 | S.DIO | MA2S1110G-(TX) | B | 70/44.3 |
| D741 | 1790001250 | S.DIO | MA2S1110G-(TX) | B | 51.4/50.5 |
| D771 | 1790001250 | S.DIO | MA2S1110G-(TX) | B | 36.5/43.7 |
| D801 | 1790001250 | S.DIO | MA2S1110G-(TX) | B | 203.8/47.4 |
| D831 | 1790001250 | S.DIO | MA2S1110G-(TX) | T | 203.7/22.1 |
| D851 | 1790001250 | S.DIO | MA2S1110G-(TX) | T | 189/27.9 |
| D852 | 1790001250 | S.DIO | MA2S1110G-(TX) | T | 189/33.1 |
| D853 | 1790001250 | S.DIO | MA2S1110G-(TX) | T | 189/39.3 |
| D854 | 1790001250 | S.DIO | MA2S1110G-(TX) | T | 189/45.5 |
| D855 | 1790001250 | S.DIO | MA2S1110G-(TX) | T | 194/52.8 |
| D871 | 1790001250 | S.DIO | MA2S1110G-(TX) | B | 241.4/18 |
| D872 | 1790000980 | S.DIO | MA3J7420GL (TX) | B | 247.7/15.6 |
| D873 | 1790001250 | S.DIO | MA2S1110G-(TX) | B | 243/94.1 |
| D900 | 1790001250 | S.DIO | MA2S1110G-(TX) | B | 218.9/100.4 |
| D901 | 1790001250 | S.DIO | MA2S1110G-(TX) | T | 207.9/100.7 |
| D902 | 1790001250 | S.DIO | MA2S1110G-(TX) | B | 197/100.2 |
| D903 | 1790001250 | S.DIO | MA2S1110G-(TX) | B | 186.4/100.5 |
| D950 | 1790001250 | S.DIO | MA2S1110G-(TX) | B | 212.3/3.9 |
| D951 | 1790001250 | S.DIO | MA2S1110G-(TX) | T | 204.4/4.5 |
| D952 | 1790001250 | S.DIO | MA2S1110G-(TX) | B | 195.7/4.9 |
| D953 | 1790001250 | S.DIO | MA2S1110G-(TX) | B | 182.6/5.3 |
| D954 | 1790001250 | S.DIO | MA2S1110G-(TX) | T | 235.4/16.2 |
| L1 | 6200005521 | S.COL | NLV25T-470J | T | 186.7/100.6 |
| L2 | 6200005521 | S.COL | NLV25T-470J | B | 183.8/77.2 |
| L3 | 6200010830 | S.COL | C2520C-3R3G-A | T | 179.2/88.5 |
| L4 | 6200010830 | S.COL | C2520C-3R3G-A | T | 179.2/80.2 |
| L5 | 6200010830 | S.COL | C2520C-3R3G-A | T | 178.2/84.3 |
| L6 | 6200010830 | S.COL | C2520C-3R3G-A | T | 178/76.2 |
| L21 | 6200005521 | S.COL | NLV25T-470J | B | 166/107.5 |
| L22 | 6200005521 | S.COL | NLV25T-470J | B | 163/107.5 |
| L23 | 6140004040 | COL | LR-443 | | |
| L24 | 6140004050 | COL | LR-444 | | |
| L25 | 6140004050 | COL | LR-444 | | |
| L26 | 6140004050 | COL | LR-444 | | |
| L27 | 6140004040 | COL | LR-443 | | |
| L51 | 6200005521 | S.COL | NLV25T-470J | B | 154.3/111.3 |
| L52 | 6200005521 | S.COL | NLV25T-470J | B | 151.3/107.2 |
| L53 | 6140004060 | COL | LR-445 | | |
| L54 | 6140004080 | COL | LR-446 | | |

## [BPF UNIT]

| REF NO. | ORDER NO. | DESCRIPTION | | M. | H/V LOCATION |
|---|---|---|---|---|---|
| L55 | 6140004080 | COL | LR-446 | | |
| L56 | 6140004080 | COL | LR-446 | | |
| L57 | 6140004060 | COL | LR-445 | | |
| L81 | 6200005521 | S.COL | NLV25T-470J | B | 142.1/109.6 |
| L82 | 6200005521 | S.COL | NLV25T-470J | B | 139.1/107.3 |
| L83 | 6140004090 | COL | LR-447 | | |
| L84 | 6140004230 | COL | LR-458 | | |
| L85 | 6140004230 | COL | LR-458 | | |
| L86 | 6140004230 | COL | LR-458 | | |
| L87 | 6140004090 | COL | LR-447 | | |
| L111 | 6200005521 | S.COL | NLV25T-470J | B | 118.1/109.1 |
| L112 | 6200005521 | S.COL | NLV25T-470J | B | 114.5/109.1 |
| L113 | 6140004090 | COL | LR-447 | | |
| L114 | 6140004100 | COL | LR-448 | | |
| L115 | 6140004100 | COL | LR-448 | | |
| L116 | 6140004100 | COL | LR-448 | | |
| L117 | 6140004090 | COL | LR-447 | | |
| L141 | 6200005521 | S.COL | NLV25T-470J | B | 106.8/111.4 |
| L142 | 6200005521 | S.COL | NLV25T-470J | B | 100.3/107.6 |
| L143 | 6140004110 | COL | LR-449 | | |
| L144 | 6140004120 | COL | LR-450 | | |
| L145 | 6140004120 | COL | LR-450 | | |
| L146 | 6140004120 | COL | LR-450 | | |
| L147 | 6140004110 | COL | LR-449 | | |
| L171 | 6200005521 | S.COL | NLV25T-470J | B | 84.9/116.9 |
| L172 | 6200005521 | S.COL | NLV25T-470J | B | 81.8/115.4 |
| L173 | 6140004140 | COL | LR-451 | | |
| L174 | 6140004150 | COL | LR-452 | | |
| L175 | 6140004150 | COL | LR-452 | | |
| L176 | 6140004150 | COL | LR-452 | | |
| L177 | 6140004140 | COL | LR-451 | | |
| L201 | 6200007021 | S.COL | NLV25T-270J | B | 61.9/112 |
| L202 | 6200007021 | S.COL | NLV25T-270J | B | 59.4/109.7 |
| L203 | 6140004160 | COL | LR-453 | | |
| L204 | 6140004180 | COL | LR-454 | | |
| L205 | 6140004180 | COL | LR-454 | | |
| L206 | 6140004180 | COL | LR-454 | | |
| L207 | 6140004160 | COL | LR-453 | | |
| L231 | 6200005011 | S.COL | NLV25T-100J | B | 44.2/116.9 |
| L232 | 6200005011 | S.COL | NLV25T-100J | B | 44.1/114.3 |
| L233 | 6140004190 | COL | LR-455 | | |
| L234 | 6140004210 | COL | LR-456 | | |
| L235 | 6140004210 | COL | LR-456 | | |
| L236 | 6140004210 | COL | LR-456 | | |
| L237 | 6140004190 | COL | LR-455 | | |
| L261 | 6200009141 | S.COL | NLV25T-6R8J | B | 27.3/111.4 |
| L262 | 6200009141 | S.COL | NLV25T-6R8J | B | 24.8/109.7 |
| L263 | 6140004220 | COL | LR-457 | | |
| L264 | 6140004160 | COL | LR-453 | | |
| L265 | 6140004160 | COL | LR-453 | | |
| L266 | 6140004160 | COL | LR-453 | | |
| L267 | 6140004220 | COL | LR-457 | | |
| L291 | 6200003281 | S.COL | NLV25T-2R2J | B | 222.8/74.1 |
| L292 | 6200003281 | S.COL | NLV25T-2R2J | B | 214/75.1 |
| L293 | 6200008090 | S.COL | LQW2BHN68NJ03L | T | 214.7/79.6 |
| L294 | 6200003041 | S.COL | NLV32T-R68J | T | 213.5/82.7 |
| L295 | 6200008090 | S.COL | LQW2BHN68NJ03L | T | 210.1/79.6 |
| L296 | 6200010870 | S.COL | C2520C-R33G-A (0.33U) | T | 209.9/76.6 |
| L321 | 6200003281 | S.COL | NLV25T-2R2J | B | 209.5/93.5 |
| L322 | 6200003281 | S.COL | NLV25T-2R2J | B | 213.2/95.3 |
| L323 | 6200003011 | S.COL | NLV32T-R27J | T | 214.2/91 |
| L324 | 6200003001 | S.COL | NLV32T-R22J | T | 209.7/87.1 |
| L325 | 6200003011 | S.COL | NLV32T-R27J | T | 209.6/93.2 |
| L371 | 6140004390 | COL | LR-459 | | |
| L372 | 6140004390 | COL | LR-459 | | |
| L373 | 6140003530 | COL | LR-395 | | |
| L391 | 6200005491 | S.COL | NLV32T-331J | T | 230.2/48.4 |
| L392 | 6200005491 | S.COL | NLV32T-331J | T | 231.7/64 |
| L393 | 6200003211 | S.COL | NLV32T-820J | B | 231.7/42.7 |
| L394 | 6200005491 | S.COL | NLV32T-331J | B | 236.2/46.6 |
| L395 | 6200005491 | S.COL | NLV32T-331J | B | 225.5/48.3 |
| L501 | 6200005521 | S.COL | NLV25T-470J | B | 183.7/36.2 |
| L502 | 6200005521 | S.COL | NLV25T-470J | B | 184.6/41 |
| L504 | 6200010830 | S.COL | C2520C-3R3G-A | T | 178.7/33.1 |
| L505 | 6200010830 | S.COL | C2520C-3R3G-A | T | 177.8/41.5 |
| L506 | 6200010830 | S.COL | C2520C-3R3G-A | T | 178.9/37.6 |
| L507 | 6200010830 | S.COL | C2520C-3R3G-A | T | 179.1/45 |
| L531 | 6200005521 | S.COL | NLV25T-470J | B | 167.5/13 |
| L532 | 6200005521 | S.COL | NLV25T-470J | B | 170.5/13 |
| L533 | 6140004040 | COL | LR-443 | | |
| L534 | 6140004050 | COL | LR-444 | | |
| L535 | 6140004050 | COL | LR-444 | | |
| L536 | 6140004050 | COL | LR-444 | | |
| L537 | 6140004040 | COL | LR-443 | | |
| L561 | 6200005521 | S.COL | NLV25T-470J | B | 149.9/12.4 |
| L562 | 6200005521 | S.COL | NLV25T-470J | B | 153.8/16.5 |
| L563 | 6140004060 | COL | LR-445 | | |
| L564 | 6140004080 | COL | LR-446 | | |
| L565 | 6140004080 | COL | LR-446 | | |
| L566 | 6140004080 | COL | LR-446 | | |
| L567 | 6140004060 | COL | LR-445 | | |
| L591 | 6200005521 | S.COL | NLV25T-470J | B | 139.9/9.2 |
| L592 | 6200005521 | S.COL | NLV25T-470J | B | 142.7/9.2 |
| L593 | 6140004090 | COL | LR-447 | | |
| L594 | 6140004230 | COL | LR-458 | | |
| L595 | 6140004230 | COL | LR-458 | | |
| L596 | 6140004230 | COL | LR-458 | | |
| L597 | 6140004090 | COL | LR-447 | | |
| L621 | 6200005521 | S.COL | NLV25T-470J | B | 116.8/9.5 |
| L622 | 6200005521 | S.COL | NLV25T-470J | B | 122.4/6.3 |
| L623 | 6140004090 | COL | LR-447 | | |
| L624 | 6140004100 | COL | LR-448 | | |
| L625 | 6140004100 | COL | LR-448 | | |
| L626 | 6140004100 | COL | LR-448 | | |

M.=Mounted side (T: Mounted on the Top side, B: Mounted on the Bottom side)
S.=Surface mount

## [BPF UNIT]

| REF NO. | ORDER NO. | DESCRIPTION | | M. | H/V LOCATION |
|---|---|---|---|---|---|
| L627 | 6140004090 | COL | LR-447 | | |
| L651 | 6200005521 | S.COL | NLV25T-470J | B | 105.4/13 |
| L652 | 6200005521 | S.COL | NLV25T-470J | B | 108/9.5 |
| L653 | 6140004110 | COL | LR-449 | | |
| L654 | 6140004120 | COL | LR-450 | | |
| L655 | 6140004120 | COL | LR-450 | | |
| L656 | 6140004120 | COL | LR-450 | | |
| L657 | 6140004110 | COL | LR-449 | | |
| L681 | 6200005521 | S.COL | NLV25T-470J | B | 77.4/6.2 |
| L682 | 6200005521 | S.COL | NLV25T-470J | B | 80.4/3.8 |
| L683 | 6140004140 | COL | LR-451 | | |
| L684 | 6140004150 | COL | LR-452 | | |
| L685 | 6140004150 | COL | LR-452 | | |
| L686 | 6140004150 | COL | LR-452 | | |
| L687 | 6140004140 | COL | LR-451 | | |
| L711 | 6200007021 | S.COL | NLV25T-270J | B | 56.4/10.8 |
| L712 | 6200007021 | S.COL | NLV25T-270J | B | 61.1/8.8 |
| L713 | 6140004160 | COL | LR-453 | | |
| L714 | 6140004180 | COL | LR-454 | | |
| L715 | 6140004180 | COL | LR-454 | | |
| L716 | 6140004180 | COL | LR-454 | | |
| L717 | 6140004160 | COL | LR-453 | | |
| L741 | 6200005011 | S.COL | NLV25T-100J | B | 44.2/6.2 |
| L742 | 6200005011 | S.COL | NLV25T-100J | B | 46.2/3.4 |
| L743 | 6140004190 | COL | LR-455 | | |
| L744 | 6140004210 | COL | LR-456 | | |
| L745 | 6140004210 | COL | LR-456 | | |
| L746 | 6140004210 | COL | LR-456 | | |
| L747 | 6140004190 | COL | LR-455 | | |
| L771 | 6200009141 | S.COL | NLV25T-6R8J | B | 23.4/10.6 |
| L772 | 6200009141 | S.COL | NLV25T-6R8J | B | 27.1/9 |
| L773 | 6140004220 | COL | LR-457 | | |
| L774 | 6140004160 | COL | LR-453 | | |
| L775 | 6140004160 | COL | LR-453 | | |
| L776 | 6140004160 | COL | LR-453 | | |
| L777 | 6140004220 | COL | LR-457 | | |
| L801 | 6200003281 | S.COL | NLV25T-2R2J | B | 214.4/45.7 |
| L802 | 6200003281 | S.COL | NLV25T-2R2J | B | 211.8/42.4 |
| L805 | 6200008090 | S.COL | LQW2BHN68NJ03L | T | 214.6/41.4 |
| L806 | 6200003041 | S.COL | NLV32T-R68J | T | 211.5/36.9 |
| L807 | 6200008090 | S.COL | LQW2BHN68NJ03L | T | 209.7/40 |
| L808 | 6200010870 | S.COL | C2520C-R33G-A (0.33U) | T | 209.8/43 |
| L831 | 6200003281 | S.COL | NLV25T-2R2J | B | 211.6/26.7 |
| L832 | 6200003281 | S.COL | NLV25T-2R2J | B | 213.2/23.7 |
| L833 | 6200003011 | S.COL | NLV32T-R27J | T | 214.2/29.7 |
| L834 | 6200003001 | S.COL | NLV32T-R22J | T | 209.7/32.9 |
| L835 | 6200003011 | S.COL | NLV32T-R27J | T | 209.4/27.3 |
| L900 | 6200001831 | S.COL | NLV32T-100J | B | 213.2/113.1 |
| L901 | 6200003950 | S.COL | HF50ACC 322513-T | B | 11.6/20.4 |
| L902 | 6200003950 | S.COL | HF50ACC 322513-T | B | 11.7/16.4 |
| L903 | 6200001831 | S.COL | NLV32T-100J | T | 7.4/27.5 |
| L904 | 6200001831 | S.COL | NLV32T-100J | T | 11.6/27.5 |
| L905 | 6140004380 | COL | LR-498 | | |
| L906 | 6200009690 | S.COL | LQH43CN101K03L | T | 216.9/114.5 |
| L907 | 6200001831 | S.COL | NLV32T-100J | B | 193.1/113.1 |
| L908 | 6140004380 | COL | LR-498 | | |
| L909 | 6200009690 | S.COL | LQH43CN101K03L | T | 196/115.1 |
| L950 | 6200001831 | S.COL | NLV32T-100J | B | 211.8/17 |
| L951 | 6140004380 | COL | LR-498 | | |
| L952 | 6200009690 | S.COL | LQH43CN101K03L | T | 213.8/3.4 |
| L953 | 6200001831 | S.COL | NLV32T-100J | B | 191.1/17 |
| L954 | 6140004380 | COL | LR-498 | | |
| L955 | 6200009690 | S.COL | LQH43CN101K03L | T | 196/3.3 |
| | | | | | |
| R1 | 7030003640 | S.RES | ERJ3GEYJ 473 V (47 k) | T | 181.4/92.2 |
| R3 | 7030003860 | S.RES | ERJ3GE JPW V | T | 182.1/90.3 |
| R101 | 7030003320 | S.RES | ERJ3GEYJ 101 V (100) | T | 7.2/67.9 |
| R102 | 7030003320 | S.RES | ERJ3GEYJ 101 V (100) | T | 7.9/71.3 |
| R103 | 7030003320 | S.RES | ERJ3GEYJ 101 V (100) | T | 8.7/67.9 |
| R104 | 7030003320 | S.RES | ERJ3GEYJ 101 V (100) | T | 9.3/71 |
| R105 | 7030003320 | S.RES | ERJ3GEYJ 101 V (100) | T | 10.6/71 |
| R106 | 7030003320 | S.RES | ERJ3GEYJ 101 V (100) | T | 11.3/89.9 |
| R107 | 7030003320 | S.RES | ERJ3GEYJ 101 V (100) | T | 11.6/87.9 |
| R108 | 7030003320 | S.RES | ERJ3GEYJ 101 V (100) | T | 11.1/83.2 |
| R117 | 7030003320 | S.RES | ERJ3GEYJ 101 V (100) | T | 9.8/83.5 |
| R118 | 7030003320 | S.RES | ERJ3GEYJ 101 V (100) | T | 8.5/83.5 |
| R119 | 7030003320 | S.RES | ERJ3GEYJ 101 V (100) | T | 7.4/87.2 |
| R120 | 7030003320 | S.RES | ERJ3GEYJ 101 V (100) | T | 6.7/83.2 |
| R121 | 7030003320 | S.RES | ERJ3GEYJ 101 V (100) | T | 6.9/92.2 |
| R122 | 7030003320 | S.RES | ERJ3GEYJ 101 V (100) | T | 7.1/94.8 |
| R123 | 7030003320 | S.RES | ERJ3GEYJ 101 V (100) | B | 10/95.5 |
| R124 | 7030003320 | S.RES | ERJ3GEYJ 101 V (100) | T | 11/94.3 |
| R133 | 7030003560 | S.RES | ERJ3GEYJ 103 V (10 k) | T | 191.2/55.8 |
| R134 | 7030003320 | S.RES | ERJ3GEYJ 101 V (100) | B | 10/98.9 |
| R141 | 7030003360 | S.RES | ERJ3GEYJ 221 V (220) | B | 5.6/14 |
| R142 | 7030003360 | S.RES | ERJ3GEYJ 221 V (220) | B | 5.6/15.7 |
| R143 | 7030003360 | S.RES | ERJ3GEYJ 221 V (220) | B | 5.1/19.2 |
| R351 | 7030003340 | S.RES | ERJ3GEYJ 151 V (150) | B | 197.7/90.7 |
| R352 | 7030003300 | S.RES | ERJ3GEYJ 680 V (68) | B | 193.9/87.5 |
| R354 | 7030003280 | S.RES | ERJ3GEYJ 470 V (47) | B | 200.9/84.8 |
| R355 | 7030003320 | S.RES | ERJ3GEYJ 101 V (100) | B | 193.9/81.3 |
| R357 | 7030003240 | S.RES | ERJ3GEYJ 220 V (22) | B | 197.8/71.6 |
| R358 | 7030003350 | S.RES | ERJ3GEYJ 181 V (180) | B | 194.4/70.3 |
| R360 | 7030003320 | S.RES | ERJ3GEYJ 101 V (100) | T | 191.8/66.1 |
| R371 | 7030003320 | S.RES | ERJ3GEYJ 101 V (100) | T | 217.4/71.2 |
| R372 | 7030003320 | S.RES | ERJ3GEYJ 101 V (100) | B | 209.5/61.9 |
| R373 | 7030003320 | S.RES | ERJ3GEYJ 101 V (100) | B | 209.5/58.9 |
| R381 | 7030003520 | S.RES | ERJ3GEYJ 472 V (4.7 k) | T | 231.4/51.9 |
| R382 | 7030003360 | S.RES | ERJ3GEYJ 221 V (220) | B | 239.8/112.7 |
| R383 | 7030003680 | S.RES | ERJ3GEYJ 104 V (100 k) | T | 232.3/49.1 |
| R384 | 7030003420 | S.RES | ERJ3GEYJ 681 V (680) | B | 236/49.9 |
| R385 | 7030003420 | S.RES | ERJ3GEYJ 681 V (680) | B | 231.3/46.7 |
| R386 | 7030003480 | S.RES | ERJ3GEYJ 222 V (2.2 k) | B | 237.6/62.6 |

## [BPF UNIT]

| REF NO. | ORDER NO. | DESCRIPTION | | M. | H/V LOCATION |
|---|---|---|---|---|---|
| R387 | 7030003560 | S.RES | ERJ3GEYJ 103 V (10 k) | B | 238.8/55.5 |
| R388 | 7540000130 | ABS | 2P-50A-301 | | |
| R389 | 7030003420 | S.RES | ERJ3GEYJ 681 V (680) | T | 235/65.4 |
| R390 | 7030003560 | S.RES | ERJ3GEYJ 103 V (10 k) | T | 233/51.9 |
| R391 | 7030003680 | S.RES | ERJ3GEYJ 104 V (100 k) | T | 234.3/51.9 |
| R392 | 7030003420 | S.RES | ERJ3GEYJ 681 V (680) | B | 234.7/49.9 |
| R393 | 7030003420 | S.RES | ERJ3GEYJ 681 V (680) | B | 231.3/48 |
| R394 | 7030003420 | S.RES | ERJ3GEYJ 681 V (680) | T | 235/64.1 |
| R395 | 7030003420 | S.RES | ERJ3GEYJ 681 V (680) | B | 235.2/56.4 |
| R396 | 7030003420 | S.RES | ERJ3GEYJ 681 V (680) | B | 235.2/55.1 |
| R401 | 7030003360 | S.RES | ERJ3GEYJ 221 V (220) | B | 227.6/96.2 |
| R402 | 7030003680 | S.RES | ERJ3GEYJ 104 V (100 k) | T | 234.5/111.6 |
| R403 | 7030003480 | S.RES | ERJ3GEYJ 222 V (2.2 k) | T | 231.9/110.3 |
| R404 | 7030003860 | S.RES | ERJ3GE JPW V | T | 234.5/110.3 |
| R441 | 7030003360 | S.RES | ERJ3GEYJ 221 V (220) | B | 11/24.4 |
| R442 | 7030003360 | S.RES | ERJ3GEYJ 221 V (220) | B | 8.2/23.4 |
| R451 | 7030003320 | S.RES | ERJ3GEYJ 101 V (100) | T | 10.6/32.9 |
| R452 | 7030003320 | S.RES | ERJ3GEYJ 101 V (100) | T | 11.9/33.1 |
| R453 | 7030003320 | S.RES | ERJ3GEYJ 101 V (100) | T | 13.2/33.1 |
| R454 | 7030003320 | S.RES | ERJ3GEYJ 101 V (100) | T | 14.5/33.1 |
| R455 | 7030003320 | S.RES | ERJ3GEYJ 101 V (100) | T | 14.5/36.9 |
| R456 | 7030003320 | S.RES | ERJ3GEYJ 101 V (100) | T | 11.1/46.9 |
| R457 | 7030003320 | S.RES | ERJ3GEYJ 101 V (100) | T | 8.9/46.3 |
| R458 | 7030003320 | S.RES | ERJ3GEYJ 101 V (100) | T | 8.9/47.6 |
| R467 | 7030003320 | S.RES | ERJ3GEYJ 101 V (100) | T | 10.6/49.6 |
| R468 | 7030003320 | S.RES | ERJ3GEYJ 101 V (100) | T | 13.6/50.2 |
| R469 | 7030003320 | S.RES | ERJ3GEYJ 101 V (100) | T | 7.6/49.4 |
| R470 | 7030003320 | S.RES | ERJ3GEYJ 101 V (100) | T | 6.9/50.7 |
| R471 | 7030003320 | S.RES | ERJ3GEYJ 101 V (100) | T | 6.2/52.6 |
| R472 | 7030003320 | S.RES | ERJ3GEYJ 101 V (100) | T | 9.2/53 |
| R473 | 7030003320 | S.RES | ERJ3GEYJ 101 V (100) | T | 10.5/53.7 |
| R474 | 7030003320 | S.RES | ERJ3GEYJ 101 V (100) | T | 11.8/54.2 |
| R475 | 7030003320 | S.RES | ERJ3GEYJ 101 V (100) | T | 10.7/63.9 |
| R481 | 7030003560 | S.RES | ERJ3GEYJ 103 V (10 k) | B | 196.9/55.9 |
| R501 | 7030003640 | S.RES | ERJ3GEYJ 473 V (47 k) | T | 183/30 |
| R503 | 7030003860 | S.RES | ERJ3GE JPW V | T | 182.2/31.9 |
| R851 | 7030003340 | S.RES | ERJ3GEYJ 151 V (150) | B | 198.2/32.1 |
| R852 | 7030003300 | S.RES | ERJ3GEYJ 680 V (68) | B | 193.5/32.1 |
| R854 | 7030003280 | S.RES | ERJ3GEYJ 470 V (47) | B | 200.9/34.7 |
| R855 | 7030003320 | S.RES | ERJ3GEYJ 101 V (100) | B | 193.5/38.3 |
| R857 | 7030003240 | S.RES | ERJ3GEYJ 220 V (22) | B | 197.9/48.2 |
| R858 | 7030003350 | S.RES | ERJ3GEYJ 181 V (180) | B | 193.8/49.7 |
| R860 | 7030003320 | S.RES | ERJ3GEYJ 101 V (100) | T | 192/51 |
| R871 | 7030003360 | S.RES | ERJ3GEYJ 221 V (220) | B | 238/19.5 |
| R872 | 7030003680 | S.RES | ERJ3GEYJ 104 V (100 k) | B | 236.5/14.4 |
| R873 | 7030003480 | S.RES | ERJ3GEYJ 222 V (2.2 k) | B | 239.6/16 |
| R874 | 7030003860 | S.RES | ERJ3GE JPW V | B | 236.5/16 |
| R900 | 7030003280 | S.RES | ERJ3GEYJ 470 V (47) | B | 212.8/117.1 |
| R901 | 7030003440 | S.RES | ERJ3GEYJ 102 V (1 k) | T | 207.2/117.4 |
| R902 | 7030003530 | S.RES | ERJ3GEYJ 562 V (5.6 k) | T | 210.4/116.6 |
| R903 | 7030003380 | S.RES | ERJ3GEYJ 331 V (330) | B | 203.9/113.3 |
| R904 | 7030003220 | S.RES | ERJ3GEYJ 150 V (15) | B | 206.3/111.6 |
| R905 | 7030003380 | S.RES | ERJ3GEYJ 331 V (330) | B | 203.3/111.8 |
| R906 | 7030003320 | S.RES | ERJ3GEYJ 101 V (100) | T | 12.5/92.8 |
| R907 | 7030003320 | S.RES | ERJ3GEYJ 101 V (100) | T | 13.8/92.8 |
| R908 | 7030003280 | S.RES | ERJ3GEYJ 470 V (47) | B | 194.5/116.4 |
| R909 | 7030003440 | S.RES | ERJ3GEYJ 102 V (1 k) | T | 185.4/115.9 |
| R910 | 7030003530 | S.RES | ERJ3GEYJ 562 V (5.6 k) | T | 189.6/116.7 |
| R911 | 7030003320 | S.RES | ERJ3GEYJ 101 V (100) | B | 209.4/110.8 |
| R912 | 7030003320 | S.RES | ERJ3GEYJ 101 V (100) | B | 187.5/111.2 |
| R913 | 7030004050 | S.RES | ERJ3GEYJ 1R0 V (1) | B | 189.7/106.1 |
| R950 | 7030003280 | S.RES | ERJ3GEYJ 470 V (47) | B | 210.2/20 |
| R951 | 7030003440 | S.RES | ERJ3GEYJ 102 V (1 k) | T | 207.7/21.4 |
| R952 | 7030003530 | S.RES | ERJ3GEYJ 562 V (5.6 k) | T | 211/20.8 |
| R953 | 7030003380 | S.RES | ERJ3GEYJ 331 V (330) | B | 203.4/18.4 |
| R954 | 7030003220 | S.RES | ERJ3GEYJ 150 V (15) | B | 205.6/16.7 |
| R955 | 7030003380 | S.RES | ERJ3GEYJ 331 V (330) | B | 202.8/16.7 |
| R956 | 7030003320 | S.RES | ERJ3GEYJ 101 V (100) | T | 8.3/65 |
| R957 | 7030003320 | S.RES | ERJ3GEYJ 101 V (100) | B | 11.6/60.5 |
| R958 | 7030003280 | S.RES | ERJ3GEYJ 470 V (47) | B | 189.5/19.9 |
| R959 | 7030003440 | S.RES | ERJ3GEYJ 102 V (1 k) | T | 186.5/21.4 |
| R960 | 7030003530 | S.RES | ERJ3GEYJ 562 V (5.6 k) | T | 191.5/20 |
| R961 | 7030003320 | S.RES | ERJ3GEYJ 101 V (100) | B | 208.3/16.4 |
| R962 | 7030003320 | S.RES | ERJ3GEYJ 101 V (100) | B | 187.7/16.4 |
| R963 | 7030004050 | S.RES | ERJ3GEYJ 1R0 V (1) | B | 181.4/16.5 |
| | | | | | |
| C1 | 4030006880 | S.CER | C1608 JB 1H 472K-T | B | 183.4/92.3 |
| C2 | 4030006880 | S.CER | C1608 JB 1H 472K-T | T | 185.3/91.5 |
| C3 | 4030006880 | S.CER | C1608 JB 1H 472K-T | T | 184.1/99.8 |
| C4 | 4030006880 | S.CER | C1608 JB 1H 472K-T | B | 183.1/73.9 |
| C5 | 4030006880 | S.CER | C1608 JB 1H 472K-T | B | 182.5/66.5 |
| C6 | 4030006880 | S.CER | C1608 JB 1H 472K-T | T | 183.9/73.9 |
| C7 | 4030017840 | S.CER | C2012 CH 1H 222J-T | T | 182.8/86.4 |
| C8 | 4030017850 | S.CER | C2012 CH 1H 272J-T | T | 182.9/84.1 |
| C9 | 4030017820 | S.CER | C2012 CH 1H 122J-T | T | 182.9/82.3 |
| C10 | 4030017840 | S.CER | C2012 CH 1H 222J-T | T | 182.8/77.5 |
| C21 | 4030006880 | S.CER | C1608 JB 1H 472K-T | B | 165.3/112.2 |
| C22 | 4030006880 | S.CER | C1608 JB 1H 472K-T | B | 162.3/112.2 |
| C23 | 4030006880 | S.CER | C1608 JB 1H 472K-T | B | 166.8/110.5 |
| C24 | 4030006880 | S.CER | C1608 JB 1H 472K-T | T | 163.7/81.5 |
| C25 | 4030006880 | S.CER | C1608 JB 1H 472K-T | B | 171.5/76.9 |
| C26 | 4030006880 | S.CER | C1608 JB 1H 472K-T | B | 168.9/77.7 |
| C27 | 4030017810 | S.CER | C1608 CH 1H 102J-T | B | 162.6/104.3 |
| C28 | 4030017810 | S.CER | C1608 CH 1H 102J-T | B | 162.6/102.4 |
| C29 | 4030010760 | S.CER | C1608 CH 1H 331J-T | B | 168.7/98 |
| C30 | 4030007140 | S.CER | C1608 CH 1H 121J-T | B | 168.7/96.1 |
| C31 | 4030007160 | S.CER | C1608 CH 1H 181J-T | B | 164.1/93.9 |
| C32 | 4030007060 | S.CER | C1608 CH 1H 270J-T | B | 166.1/94 |
| C33 | 4030010760 | S.CER | C1608 CH 1H 331J-T | B | 168.7/93.2 |
| C34 | 4030007090 | S.CER | C1608 CH 1H 470J-T | B | 168.7/90.8 |
| C35 | 4030007160 | S.CER | C1608 CH 1H 181J-T | B | 164.3/89.3 |
| C36 | 4030007060 | S.CER | C1608 CH 1H 270J-T | B | 164.2/91 |
| C38 | 4030010760 | S.CER | C1608 CH 1H 331J-T | B | 165.6/83.4 |

M.=Mounted side (T: Mounted on the Top side, B: Mounted on the Bottom side)
S.=Surface mount

## [BPF UNIT]

| REF NO. | ORDER NO. | DESCRIPTION | M. | H/V LOCATION |
|---|---|---|---|---|
| C39 | 4030007140 | S.CER C1608 CH 1H 121J-T | B | 165.6/85.5 |
| C40 | 4030017810 | S.CER C1608 CH 1H 102J-T | B | 170/74.5 |
| C41 | 4030017810 | S.CER C1608 CH 1H 102J-T | B | 170/72.7 |
| C51 | 4030006880 | S.CER C1608 JB 1H 472K-T | T | 153.8/116 |
| C52 | 4030006880 | S.CER C1608 JB 1H 472K-T | B | 150.6/112.3 |
| C53 | 4030006880 | S.CER C1608 JB 1H 472K-T | B | 153.8/116 |
| C54 | 4030006880 | S.CER C1608 JB 1H 472K-T | B | 160.3/71.9 |
| C55 | 4030006880 | S.CER C1608 JB 1H 472K-T | B | 160.2/65.2 |
| C56 | 4030006880 | S.CER C1608 JB 1H 472K-T | T | 165.1/68.5 |
| C57 | 4030017800 | S.CER C1608 CH 1H 561J-T | B | 143.6/99.3 |
| C58 | 4030010760 | S.CER C1608 CH 1H 331J-T | B | 143.6/97.2 |
| C59 | 4030010760 | S.CER C1608 CH 1H 331J-T | B | 144.2/94.6 |
| C60 | 4030007080 | S.CER C1608 CH 1H 390J-T | B | 144.2/92.2 |
| C61 | 4030007100 | S.CER C1608 CH 1H 560J-T | B | 141.8/90.2 |
| C62 | 4030010760 | S.CER C1608 CH 1H 331J-T | B | 139.5/90.2 |
| C63 | 4030010760 | S.CER C1608 CH 1H 331J-T | B | 143.8/83 |
| C64 | 4030007090 | S.CER C1608 CH 1H 470J-T | B | 143.8/85.3 |
| C65 | 4030010760 | S.CER C1608 CH 1H 331J-T | B | 141.1/82 |
| C66 | 4030007100 | S.CER C1608 CH 1H 560J-T | B | 138.9/82 |
| C67 | 4030010760 | S.CER C1608 CH 1H 331J-T | B | 143.7/78.7 |
| C68 | 4030007080 | S.CER C1608 CH 1H 390J-T | B | 143.7/81.1 |
| C69 | 4030017800 | S.CER C1608 CH 1H 561J-T | B | 144/75.1 |
| C70 | 4030010760 | S.CER C1608 CH 1H 331J-T | B | 144/77.1 |
| C81 | 4030006880 | S.CER C1608 JB 1H 472K-T | B | 139.9/115 |
| C82 | 4030006880 | S.CER C1608 JB 1H 472K-T | B | 138.1/111.8 |
| C83 | 4030006880 | S.CER C1608 JB 1H 472K-T | B | 140.7/117 |
| C84 | 4030006880 | S.CER C1608 JB 1H 472K-T | B | 138.4/72.1 |
| C85 | 4030006880 | S.CER C1608 JB 1H 472K-T | B | 144.9/66.5 |
| C86 | 4030006880 | S.CER C1608 JB 1H 472K-T | B | 143/68.1 |
| C87 | 4030017800 | S.CER C1608 CH 1H 561J-T | B | 126.7/116.6 |
| C88 | 4030011330 | S.CER C1608 CH 1H 391J-T | B | 126.7/114.8 |
| C89 | 4030007160 | S.CER C1608 CH 1H 181J-T | B | 126.8/104.3 |
| C90 | 4030007070 | S.CER C1608 CH 1H 330J-T | B | 126.8/106.2 |
| C91 | 4030007030 | S.CER C1608 CH 1H 150J-T | B | 130.7/102.1 |
| C92 | 4030007120 | S.CER C1608 CH 1H 820J-T | B | 128.9/102.1 |
| C93 | 4030007140 | S.CER C1608 CH 1H 121J-T | B | 126.6/101.3 |
| C94 | 4030007100 | S.CER C1608 CH 1H 560J-T | B | 126.6/99.6 |
| C95 | 4030007120 | S.CER C1608 CH 1H 820J-T | B | 129.4/92.5 |
| C96 | 4030007030 | S.CER C1608 CH 1H 150J-T | B | 131.4/92.5 |
| C97 | 4030007160 | S.CER C1608 CH 1H 181J-T | B | 126.7/89.6 |
| C98 | 4030007070 | S.CER C1608 CH 1H 330J-T | B | 126.7/88 |
| C99 | 4030017800 | S.CER C1608 CH 1H 561J-T | B | 126.7/86.1 |
| C100 | 4030011330 | S.CER C1608 CH 1H 391J-T | B | 126.7/84.3 |
| C111 | 4030006880 | S.CER C1608 JB 1H 472K-T | B | 118.1/115.2 |
| C112 | 4030006880 | S.CER C1608 JB 1H 472K-T | B | 115.2/112.4 |
| C113 | 4030006880 | S.CER C1608 JB 1H 472K-T | B | 118.9/117.6 |
| C114 | 4030006880 | S.CER C1608 JB 1H 472K-T | B | 107.7/69.4 |
| C115 | 4030006880 | S.CER C1608 JB 1H 472K-T | B | 104.3/65.9 |
| C116 | 4030006880 | S.CER C1608 JB 1H 472K-T | T | 108.7/67.5 |
| C117 | 4030010760 | S.CER C1608 CH 1H 331J-T | B | 110.3/109.3 |
| C118 | 4030007150 | S.CER C1608 CH 1H 151J-T | B | 110.3/107.8 |
| C119 | 4030007150 | S.CER C1608 CH 1H 151J-T | B | 110.3/96.6 |
| C120 | 4030007060 | S.CER C1608 CH 1H 270J-T | B | 110.3/98.3 |
| C121 | 4030007060 | S.CER C1608 CH 1H 270J-T | B | 106.8/95 |
| C122 | 4030007140 | S.CER C1608 CH 1H 121J-T | B | 105.2/95 |
| C123 | 4030007150 | S.CER C1608 CH 1H 151J-T | B | 110.3/94.3 |
| C124 | 4030007010 | S.CER C1608 CH 1H 100D-T | B | 110.3/92.7 |
| C125 | 4030007140 | S.CER C1608 CH 1H 121J-T | B | 109.6/84.4 |
| C126 | 4030007060 | S.CER C1608 CH 1H 270J-T | B | 107.5/84.4 |
| C127 | 4030007150 | S.CER C1608 CH 1H 151J-T | B | 110.3/80.6 |
| C128 | 4030007060 | S.CER C1608 CH 1H 270J-T | B | 110.3/78.7 |
| C129 | 4030010760 | S.CER C1608 CH 1H 331J-T | B | 110.3/73.7 |
| C130 | 4030007150 | S.CER C1608 CH 1H 151J-T | B | 110.4/72 |
| C141 | 4030006880 | S.CER C1608 JB 1H 472K-T | B | 105.2/115.2 |
| C142 | 4030006880 | S.CER C1608 JB 1H 472K-T | B | 97.2/108.7 |
| C143 | 4030006880 | S.CER C1608 JB 1H 472K-T | B | 105.6/117.6 |
| C144 | 4030006880 | S.CER C1608 JB 1H 472K-T | B | 91/72.9 |
| C145 | 4030006880 | S.CER C1608 JB 1H 472K-T | B | 90.2/65.9 |
| C146 | 4030006880 | S.CER C1608 JB 1H 472K-T | T | 93.4/70.3 |
| C147 | 4030007170 | S.CER C1608 CH 1H 221J-T | B | 92.3/109.8 |
| C148 | 4030007170 | S.CER C1608 CH 1H 221J-T | B | 92.3/108 |
| C149 | 4030007130 | S.CER C1608 CH 1H 101J-T | B | 92.4/104.5 |
| C150 | 4030007050 | S.CER C1608 CH 1H 220J-T | B | 92.4/102.6 |
| C151 | 4030007070 | S.CER C1608 CH 1H 330J-T | B | 93.1/99.9 |
| C152 | 4030007080 | S.CER C1608 CH 1H 390J-T | B | 94.8/99.9 |
| C153 | 4030007120 | S.CER C1608 CH 1H 820J-T | B | 92.4/94.8 |
| C154 | 4030007050 | S.CER C1608 CH 1H 220J-T | B | 92.4/93.3 |
| C155 | 4030007080 | S.CER C1608 CH 1H 390J-T | B | 95.5/92.5 |
| C156 | 4030007070 | S.CER C1608 CH 1H 330J-T | B | 97.7/92.5 |
| C157 | 4030007130 | S.CER C1608 CH 1H 101J-T | B | 92.4/90.8 |
| C158 | 4030007050 | S.CER C1608 CH 1H 220J-T | B | 92.4/89.2 |
| C159 | 4030007170 | S.CER C1608 CH 1H 221J-T | B | 92.4/79.9 |
| C160 | 4030007170 | S.CER C1608 CH 1H 221J-T | B | 92.4/77.8 |
| C171 | 4030006880 | S.CER C1608 JB 1H 472K-T | B | 73.9/115.2 |
| C172 | 4030006880 | S.CER C1608 JB 1H 472K-T | B | 71.1/112.4 |
| C173 | 4030006880 | S.CER C1608 JB 1H 472K-T | B | 74.9/117.6 |
| C174 | 4030006880 | S.CER C1608 JB 1H 472K-T | B | 78.9/72.9 |
| C175 | 4030006880 | S.CER C1608 JB 1H 472K-T | B | 77.9/65.8 |
| C176 | 4030006880 | S.CER C1608 JB 1H 472K-T | B | 81.6/75.9 |
| C177 | 4030007170 | S.CER C1608 CH 1H 221J-T | B | 78.3/115.3 |
| C178 | 4030007110 | S.CER C1608 CH 1H 680J-T | B | 78.3/112.9 |
| C179 | 4030007090 | S.CER C1608 CH 1H 470J-T | B | 74.1/103.9 |
| C180 | 4030007090 | S.CER C1608 CH 1H 470J-T | B | 74.1/105.7 |
| C181 | 4030007070 | S.CER C1608 CH 1H 330J-T | B | 73.3/101.4 |
| C182 | 4030007070 | S.CER C1608 CH 1H 330J-T | B | 71.4/101.4 |
| C183 | 4030007120 | S.CER C1608 CH 1H 820J-T | B | 74.1/98.9 |
| C185 | 4030007070 | S.CER C1608 CH 1H 330J-T | B | 73.3/93.6 |
| C186 | 4030007070 | S.CER C1608 CH 1H 330J-T | B | 71.4/93.6 |
| C187 | 4030007090 | S.CER C1608 CH 1H 470J-T | B | 74.1/90.2 |
| C188 | 4030007090 | S.CER C1608 CH 1H 470J-T | B | 74.1/88.1 |
| C189 | 4030007170 | S.CER C1608 CH 1H 221J-T | B | 74.1/85.9 |
| C190 | 4030007110 | S.CER C1608 CH 1H 680J-T | B | 74.1/83.9 |
| C201 | 4030006880 | S.CER C1608 JB 1H 472K-T | B | 61.6/115.2 |
| C202 | 4030006880 | S.CER C1608 JB 1H 472K-T | B | 58.8/112.4 |

## [BPF UNIT]

| REF NO. | ORDER NO. | DESCRIPTION | M. | H/V LOCATION |
|---|---|---|---|---|
| C203 | 4030006880 | S.CER C1608 JB 1H 472K-T | B | 58.2/116.1 |
| C204 | 4030006880 | S.CER C1608 JB 1H 472K-T | B | 66.4/76.6 |
| C205 | 4030006880 | S.CER C1608 JB 1H 472K-T | B | 71.2/80.2 |
| C206 | 4030006880 | S.CER C1608 JB 1H 472K-T | B | 70.2/74.8 |
| C207 | 4030007160 | S.CER C1608 CH 1H 181J-T | B | 57.7/103.6 |
| C208 | 4030007090 | S.CER C1608 CH 1H 470J-T | B | 57.7/102 |
| C209 | 4030007090 | S.CER C1608 CH 1H 470J-T | B | 64.8/95.3 |
| C210 | 4030007040 | S.CER C1608 CH 1H 180J-T | B | 63.2/95.3 |
| C211 | 4030007030 | S.CER C1608 CH 1H 150J-T | B | 60.8/94.5 |
| C212 | 4030007050 | S.CER C1608 CH 1H 220J-T | B | 60.8/92.9 |
| C213 | 4030007090 | S.CER C1608 CH 1H 470J-T | B | 57.7/92.9 |
| C214 | 4030006990 | S.CER C1608 CH 1H 080D-T | B | 57.7/94.5 |
| C215 | 4030007050 | S.CER C1608 CH 1H 220J-T | B | 60.1/85.1 |
| C216 | 4030007030 | S.CER C1608 CH 1H 150J-T | B | 58.5/85.1 |
| C217 | 4030007090 | S.CER C1608 CH 1H 470J-T | B | 57.7/82.7 |
| C218 | 4030007040 | S.CER C1608 CH 1H 180J-T | B | 57.7/81.1 |
| C219 | 4030007160 | S.CER C1608 CH 1H 181J-T | B | 57.7/79.5 |
| C220 | 4030007090 | S.CER C1608 CH 1H 470J-T | B | 57.7/77.9 |
| C231 | 4030006880 | S.CER C1608 JB 1H 472K-T | B | 39.4/115.3 |
| C232 | 4030006880 | S.CER C1608 JB 1H 472K-T | B | 36.6/112.4 |
| C233 | 4030006880 | S.CER C1608 JB 1H 472K-T | B | 40.3/117.5 |
| C234 | 4030006880 | S.CER C1608 JB 1H 472K-T | B | 46.2/73.5 |
| C235 | 4030006880 | S.CER C1608 JB 1H 472K-T | B | 49/69.2 |
| C236 | 4030006880 | S.CER C1608 JB 1H 472K-T | B | 50.4/69.1 |
| C237 | 4030007140 | S.CER C1608 CH 1H 121J-T | B | 41.2/109.8 |
| C238 | 4030007040 | S.CER C1608 CH 1H 180J-T | B | 41.2/108.2 |
| C239 | 4030007070 | S.CER C1608 CH 1H 330J-T | B | 41.2/103.8 |
| C240 | 4030007040 | S.CER C1608 CH 1H 180J-T | B | 41.2/102.2 |
| C241 | 4030007010 | S.CER C1608 CH 1H 100D-T | B | 40.5/99.8 |
| C242 | 4030007070 | S.CER C1608 CH 1H 330J-T | B | 38.9/99.8 |
| C243 | 4030007090 | S.CER C1608 CH 1H 470J-T | B | 41.2/94.8 |
| C245 | 4030007070 | S.CER C1608 CH 1H 330J-T | B | 40.5/91.3 |
| C246 | 4030007010 | S.CER C1608 CH 1H 100D-T | B | 38.9/91.3 |
| C247 | 4030007070 | S.CER C1608 CH 1H 330J-T | B | 41.2/88.9 |
| C248 | 4030007040 | S.CER C1608 CH 1H 180J-T | B | 41.2/87.3 |
| C249 | 4030007140 | S.CER C1608 CH 1H 121J-T | B | 41.2/85.7 |
| C250 | 4030007040 | S.CER C1608 CH 1H 180J-T | B | 41.2/84.1 |
| C261 | 4030006880 | S.CER C1608 JB 1H 472K-T | B | 27/115.2 |
| C262 | 4030006880 | S.CER C1608 JB 1H 472K-T | B | 24.3/112.4 |
| C263 | 4030006880 | S.CER C1608 JB 1H 472K-T | B | 29.7/111.6 |
| C264 | 4030006880 | S.CER C1608 JB 1H 472K-T | T | 36.5/70.9 |
| C265 | 4030006880 | S.CER C1608 JB 1H 472K-T | T | 36.6/67.9 |
| C266 | 4030006880 | S.CER C1608 JB 1H 472K-T | B | 36.7/70 |
| C267 | 4030007130 | S.CER C1608 CH 1H 101J-T | B | 23.2/103.5 |
| C268 | 4030007030 | S.CER C1608 CH 1H 150J-T | B | 23.2/101.9 |
| C269 | 4030007050 | S.CER C1608 CH 1H 220J-T | B | 30.3/95.3 |
| C270 | 4030007020 | S.CER C1608 CH 1H 120J-T | B | 28.7/95.3 |
| C271 | 4030007050 | S.CER C1608 CH 1H 220J-T | B | 26.3/94.5 |
| C273 | 4030007050 | S.CER C1608 CH 1H 220J-T | B | 23.2/94.5 |
| C274 | 4030006980 | S.CER C1608 CH 1H 070D-T | B | 23.2/92.9 |
| C275 | 4030007050 | S.CER C1608 CH 1H 220J-T | B | 24/85.1 |
| C277 | 4030007050 | S.CER C1608 CH 1H 220J-T | B | 23.2/81.1 |
| C278 | 4030007020 | S.CER C1608 CH 1H 120J-T | B | 23.2/82.7 |
| C279 | 4030007130 | S.CER C1608 CH 1H 101J-T | B | 23.3/73.6 |
| C280 | 4030007030 | S.CER C1608 CH 1H 150J-T | B | 23.3/77.9 |
| C291 | 4030006880 | S.CER C1608 JB 1H 472K-T | B | 218.9/73.3 |
| C292 | 4030006880 | S.CER C1608 JB 1H 472K-T | B | 214.4/77.4 |
| C293 | 4030006880 | S.CER C1608 JB 1H 472K-T | B | 222.7/76.6 |
| C294 | 4030006880 | S.CER C1608 JB 1H 472K-T | B | 209.7/73 |
| C295 | 4030006880 | S.CER C1608 JB 1H 472K-T | B | 207.6/77.5 |
| C296 | 4030006880 | S.CER C1608 JB 1H 472K-T | B | 203.9/73.5 |
| C297 | 4030007150 | S.CER C1608 CH 1H 151J-T | T | 213/79.9 |
| C302 | 4030007030 | S.CER C1608 CH 1H 150J-T | T | 210.2/82.7 |
| C303 | 4030007130 | S.CER C1608 CH 1H 101J-T | T | 211.7/79.9 |
| C304 | 4030007040 | S.CER C1608 CH 1H 180J-T | T | 208.4/79.9 |
| C321 | 4030006880 | S.CER C1608 JB 1H 472K-T | T | 218.8/97.4 |
| C322 | 4030006880 | S.CER C1608 JB 1H 472K-T | T | 218.8/98.7 |
| C323 | 4030006880 | S.CER C1608 JB 1H 472K-T | B | 213/91 |
| C324 | 4030006880 | S.CER C1608 JB 1H 472K-T | B | 209.3/90.7 |
| C325 | 4030006880 | S.CER C1608 JB 1H 472K-T | T | 206.6/98.8 |
| C326 | 4030006880 | S.CER C1608 JB 1H 472K-T | T | 204/98.8 |
| C327 | 4030007100 | S.CER C1608 CH 1H 560J-T | T | 210.7/90.3 |
| C329 | 4030007110 | S.CER C1608 CH 1H 680J-T | T | 208.1/90.3 |
| C331 | 4030007100 | S.CER C1608 CH 1H 560J-T | T | 208.8/96.6 |
| C353 | 4030006880 | S.CER C1608 JB 1H 472K-T | B | 189.1/91.2 |
| C354 | 4030006880 | S.CER C1608 JB 1H 472K-T | B | 189.5/94.6 |
| C355 | 4030006880 | S.CER C1608 JB 1H 472K-T | T | 189/92.4 |
| C356 | 4030006880 | S.CER C1608 JB 1H 472K-T | B | 189.5/86.4 |
| C357 | 4030006880 | S.CER C1608 JB 1H 472K-T | T | 189/86.1 |
| C358 | 4030006880 | S.CER C1608 JB 1H 472K-T | B | 189.1/89.1 |
| C359 | 4030006880 | S.CER C1608 JB 1H 472K-T | T | 189/79.9 |
| C360 | 4030006880 | S.CER C1608 JB 1H 472K-T | B | 189.5/80.2 |
| C361 | 4030006880 | S.CER C1608 JB 1H 472K-T | B | 189.5/83 |
| C362 | 4030006880 | S.CER C1608 JB 1H 472K-T | T | 189/73.7 |
| C363 | 4030006880 | S.CER C1608 JB 1H 472K-T | B | 189.5/74 |
| C364 | 4030006880 | S.CER C1608 JB 1H 472K-T | B | 189.5/76.8 |
| C365 | 4030006880 | S.CER C1608 JB 1H 472K-T | T | 194/68.8 |
| C371 | 4030006880 | S.CER C1608 JB 1H 472K-T | T | 215.9/69.9 |
| C388 | 4030006880 | S.CER C1608 JB 1H 472K-T | B | 239.8/114.3 |
| C389 | 4030010210 | S.CER C3216 JB 1C 105M-T | B | 247.3/111.1 |
| C390 | 4030011600 | S.CER C1608 JB 1E 104K-T | T | 226.2/49.8 |
| C391 | 4030011600 | S.CER C1608 JB 1E 104K-T | B | 237.5/53.2 |
| C392 | 4030011600 | S.CER C1608 JB 1E 104K-T | T | 228.9/62.5 |
| C393 | 4030008860 | S.CER C1608 JB 1H 153K-T | B | 233.2/45.5 |
| C394 | 4030010210 | S.CER C3216 JB 1C 105M-T | B | 235.1/59.6 |
| C395 | 4030008860 | S.CER C1608 JB 1H 153K-T | B | 233.2/40 |
| C396 | 4030011600 | S.CER C1608 JB 1E 104K-T | B | 235.5/43.8 |
| C397 | 4550006470 | S.TAN TEESVB2 1D 106M8R | B | 227/44 |
| C398 | 4030011600 | S.CER C1608 JB 1E 104K-T | T | 5.4/102.8 |
| C399 | 4030011600 | S.CER C1608 JB 1E 104K-T | T | 5.3/77.8 |
| C401 | 4030006880 | S.CER C1608 JB 1H 472K-T | B | 223.9/95.5 |
| C402 | 4030010210 | S.CER C3216 JB 1C 105M-T | B | 234/107.1 |
| C403 | 4030009520 | S.CER C1608 CH 1H 020B-T | B | 233.9/109.3 |
| C404 | 4030007050 | S.CER C1608 CH 1H 220J-T | B | 233.9/110.9 |

M.=Mounted side (T: Mounted on the Top side, B: Mounted on the Bottom side)
S.=Surface mount

## [BPF UNIT]

| REF NO. | ORDER NO. | DESCRIPTION | M. | H/V LOCATION |
|---|---|---|---|---|
| C405 | 4030010760 | S.CER C1608 CH 1H 331J-T | B | 236.1/113.4 |
| C498 | 4030011600 | S.CER C1608 JB 1E 104K-T | T | 5.3/60.4 |
| C499 | 4030011600 | S.CER C1608 JB 1E 104K-T | T | 6.1/39.7 |
| C501 | 4030006880 | S.CER C1608 JB 1H 472K-T | B | 184.9/22 |
| C502 | 4030006880 | S.CER C1608 JB 1H 472K-T | B | 181.6/22 |
| C503 | 4030006880 | S.CER C1608 JB 1H 472K-T | B | 183.9/31.7 |
| C504 | 4030006880 | S.CER C1608 JB 1H 472K-T | B | 183.7/54.7 |
| C505 | 4030006880 | S.CER C1608 JB 1H 472K-T | T | 185.3/47.1 |
| C506 | 4030006880 | S.CER C1608 JB 1H 472K-T | B | 184.1/47.2 |
| C507 | 4030017840 | S.CER C2012 CH 1H 222J-T | T | 183/35.4 |
| C508 | 4030017850 | S.CER C2012 CH 1H 272J-T | T | 182.9/37.7 |
| C509 | 4030017820 | S.CER C2012 CH 1H 122J-T | T | 182.9/39.5 |
| C510 | 4030017840 | S.CER C2012 CH 1H 222J-T | T | 182.9/44.3 |
| C531 | 4030006880 | S.CER C1608 JB 1H 472K-T | B | 165.7/5.6 |
| C532 | 4030006880 | S.CER C1608 JB 1H 472K-T | B | 165.2/2.3 |
| C533 | 4030006880 | S.CER C1608 JB 1H 472K-T | B | 164.5/9 |
| C534 | 4030006880 | S.CER C1608 JB 1H 472K-T | B | 164/54.6 |
| C535 | 4030006880 | S.CER C1608 JB 1H 472K-T | B | 167.7/49.6 |
| C536 | 4030006880 | S.CER C1608 JB 1H 472K-T | B | 169.4/53.7 |
| C537 | 4030017810 | S.CER C1608 CH 1H 102J-T | B | 168.6/20.1 |
| C538 | 4030017810 | S.CER C1608 CH 1H 102J-T | B | 168.6/21.9 |
| C539 | 4030010760 | S.CER C1608 CH 1H 331J-T | B | 168.3/24.5 |
| C540 | 4030007140 | S.CER C1608 CH 1H 121J-T | B | 168.3/26.7 |
| C541 | 4030007160 | S.CER C1608 CH 1H 181J-T | B | 165.3/27.6 |
| C542 | 4030007060 | S.CER C1608 CH 1H 270J-T | B | 162.5/27.7 |
| C543 | 4030010760 | S.CER C1608 CH 1H 331J-T | B | 168.3/28.8 |
| C544 | 4030007090 | S.CER C1608 CH 1H 470J-T | B | 168.3/30.6 |
| C545 | 4030007160 | S.CER C1608 CH 1H 181J-T | B | 162.9/34.2 |
| C546 | 4030007060 | S.CER C1608 CH 1H 270J-T | B | 164.9/34.1 |
| C547 | 4030010760 | S.CER C1608 CH 1H 331J-T | B | 168.1/35.1 |
| C548 | 4030007140 | S.CER C1608 CH 1H 121J-T | B | 168.1/36.7 |
| C549 | 4030017810 | S.CER C1608 CH 1H 102J-T | B | 170.3/43.4 |
| C550 | 4030017810 | S.CER C1608 CH 1H 102J-T | B | 170.3/45.9 |
| C561 | 4030006880 | S.CER C1608 JB 1H 472K-T | B | 153/8 |
| C562 | 4030006880 | S.CER C1608 JB 1H 472K-T | B | 153/11.9 |
| C563 | 4030006880 | S.CER C1608 JB 1H 472K-T | B | 152/10 |
| C564 | 4030006880 | S.CER C1608 JB 1H 472K-T | T | 161.4/46.3 |
| C565 | 4030006880 | S.CER C1608 JB 1H 472K-T | B | 162.2/38.8 |
| C566 | 4030006880 | S.CER C1608 JB 1H 472K-T | T | 165.5/42.4 |
| C567 | 4030017800 | S.CER C1608 CH 1H 561J-T | B | 147.9/17.4 |
| C568 | 4030010760 | S.CER C1608 CH 1H 331J-T | B | 148.5/15.2 |
| C569 | 4030010760 | S.CER C1608 CH 1H 331J-T | B | 144.6/25.7 |
| C570 | 4030007080 | S.CER C1608 CH 1H 390J-T | B | 144.6/27.4 |
| C571 | 4030007100 | S.CER C1608 CH 1H 560J-T | B | 141.6/28.1 |
| C572 | 4030010760 | S.CER C1608 CH 1H 331J-T | B | 139.8/28.1 |
| C573 | 4030010760 | S.CER C1608 CH 1H 331J-T | B | 144.3/34.2 |
| C574 | 4030007090 | S.CER C1608 CH 1H 470J-T | B | 144.3/35.7 |
| C575 | 4030010760 | S.CER C1608 CH 1H 331J-T | B | 141.5/38.6 |
| C576 | 4030007100 | S.CER C1608 CH 1H 560J-T | B | 139.8/38.6 |
| C577 | 4030010760 | S.CER C1608 CH 1H 331J-T | B | 144.3/43.2 |
| C578 | 4030007080 | S.CER C1608 CH 1H 390J-T | B | 144.3/40.9 |
| C579 | 4030017800 | S.CER C1608 CH 1H 561J-T | B | 149.7/45.2 |
| C580 | 4030010760 | S.CER C1608 CH 1H 331J-T | B | 147.9/45.2 |
| C591 | 4030006880 | S.CER C1608 JB 1H 472K-T | B | 140.2/5.1 |
| C592 | 4030006880 | S.CER C1608 JB 1H 472K-T | B | 142.2/5.1 |
| C593 | 4030006880 | S.CER C1608 JB 1H 472K-T | B | 133/8.5 |
| C594 | 4030006880 | S.CER C1608 JB 1H 472K-T | B | 140.4/54.3 |
| C595 | 4030006880 | S.CER C1608 JB 1H 472K-T | B | 148.6/52.7 |
| C596 | 4030006880 | S.CER C1608 JB 1H 472K-T | B | 146/53.4 |
| C597 | 4030017800 | S.CER C1608 CH 1H 561J-T | B | 126.7/3.2 |
| C598 | 4030011330 | S.CER C1608 CH 1H 391J-T | B | 126.7/5.4 |
| C599 | 4030007160 | S.CER C1608 CH 1H 181J-T | B | 126.7/15.1 |
| C600 | 4030007070 | S.CER C1608 CH 1H 330J-T | B | 126.7/17.3 |
| C601 | 4030007030 | S.CER C1608 CH 1H 150J-T | B | 129.6/18.2 |
| C602 | 4030007120 | S.CER C1608 CH 1H 820J-T | B | 131.6/18.2 |
| C603 | 4030007140 | S.CER C1608 CH 1H 121J-T | B | 126.8/20.5 |
| C604 | 4030007100 | S.CER C1608 CH 1H 560J-T | B | 126.8/18.9 |
| C605 | 4030007120 | S.CER C1608 CH 1H 820J-T | B | 131.4/26.8 |
| C606 | 4030007030 | S.CER C1608 CH 1H 150J-T | B | 129.6/26.8 |
| C607 | 4030007160 | S.CER C1608 CH 1H 181J-T | B | 127.3/29 |
| C608 | 4030007070 | S.CER C1608 CH 1H 330J-T | B | 127.3/31.3 |
| C609 | 4030017800 | S.CER C1608 CH 1H 561J-T | B | 127.3/33.3 |
| C610 | 4030011330 | S.CER C1608 CH 1H 391J-T | B | 127.3/35.5 |
| C621 | 4030006880 | S.CER C1608 JB 1H 472K-T | B | 118.5/4.7 |
| C622 | 4030006880 | S.CER C1608 JB 1H 472K-T | B | 121.2/4 |
| C623 | 4030006880 | S.CER C1608 JB 1H 472K-T | B | 113.8/8.2 |
| C624 | 4030006880 | S.CER C1608 JB 1H 472K-T | T | 110.3/54.1 |
| C625 | 4030006880 | S.CER C1608 JB 1H 472K-T | B | 107.4/51.4 |
| C626 | 4030006880 | S.CER C1608 JB 1H 472K-T | T | 109/52.6 |
| C627 | 4030010760 | S.CER C1608 CH 1H 331J-T | B | 109.3/17.8 |
| C628 | 4030007150 | S.CER C1608 CH 1H 151J-T | B | 109.3/19.7 |
| C629 | 4030007150 | S.CER C1608 CH 1H 151J-T | B | 109.2/21.7 |
| C630 | 4030007060 | S.CER C1608 CH 1H 270J-T | B | 109.2/23.6 |
| C631 | 4030007060 | S.CER C1608 CH 1H 270J-T | B | 105.2/25.8 |
| C632 | 4030007140 | S.CER C1608 CH 1H 121J-T | B | 106.9/25.8 |
| C633 | 4030007150 | S.CER C1608 CH 1H 151J-T | B | 109.3/33.9 |
| C634 | 4030007010 | S.CER C1608 CH 1H 100D-T | B | 109.3/31.7 |
| C635 | 4030007140 | S.CER C1608 CH 1H 121J-T | B | 108.5/37.9 |
| C636 | 4030007060 | S.CER C1608 CH 1H 270J-T | B | 105.9/37.9 |
| C637 | 4030007150 | S.CER C1608 CH 1H 151J-T | B | 109.3/40.4 |
| C638 | 4030007060 | S.CER C1608 CH 1H 270J-T | B | 109.3/42.2 |
| C639 | 4030010760 | S.CER C1608 CH 1H 331J-T | B | 110.2/46.5 |
| C640 | 4030007150 | S.CER C1608 CH 1H 151J-T | B | 110.2/48.5 |
| C651 | 4030006880 | S.CER C1608 JB 1H 472K-T | B | 105.1/7.8 |
| C652 | 4030006880 | S.CER C1608 JB 1H 472K-T | B | 105.1/4.1 |
| C653 | 4030006880 | S.CER C1608 JB 1H 472K-T | B | 103/10.2 |
| C654 | 4030006880 | S.CER C1608 JB 1H 472K-T | T | 90.4/54.2 |
| C655 | 4030006880 | S.CER C1608 JB 1H 472K-T | B | 92.1/46.9 |
| C656 | 4030006880 | S.CER C1608 JB 1H 472K-T | T | 93.5/49.6 |
| C657 | 4030007170 | S.CER C1608 CH 1H 221J-T | B | 92.2/6 |
| C658 | 4030007170 | S.CER C1608 CH 1H 221J-T | B | 92.2/4.4 |
| C659 | 4030007130 | S.CER C1608 CH 1H 101J-T | B | 92.5/14.8 |
| C660 | 4030007050 | S.CER C1608 CH 1H 220J-T | B | 92.5/17 |
| C661 | 4030007070 | S.CER C1608 CH 1H 330J-T | B | 95.2/19.6 |

## [BPF UNIT]

| REF NO. | ORDER NO. | DESCRIPTION | M. | H/V LOCATION |
|---|---|---|---|---|
| C662 | 4030007080 | S.CER C1608 CH 1H 390J-T | B | 93.2/19.6 |
| C663 | 4030007120 | S.CER C1608 CH 1H 820J-T | B | 92.6/27.6 |
| C664 | 4030007050 | S.CER C1608 CH 1H 220J-T | B | 92.6/25.4 |
| C665 | 4030007080 | S.CER C1608 CH 1H 390J-T | B | 95.7/28.3 |
| C666 | 4030007070 | S.CER C1608 CH 1H 330J-T | B | 97.5/28.3 |
| C667 | 4030007130 | S.CER C1608 CH 1H 101J-T | B | 92.2/29.9 |
| C668 | 4030007050 | S.CER C1608 CH 1H 220J-T | B | 92.2/31.8 |
| C669 | 4030007170 | S.CER C1608 CH 1H 221J-T | B | 92.2/33.5 |
| C670 | 4030007170 | S.CER C1608 CH 1H 221J-T | B | 92.2/35.6 |
| C681 | 4030006880 | S.CER C1608 JB 1H 472K-T | B | 74.4/5.1 |
| C682 | 4030006880 | S.CER C1608 JB 1H 472K-T | B | 77.1/3.1 |
| C683 | 4030006880 | S.CER C1608 JB 1H 472K-T | B | 71.5/8.1 |
| C684 | 4030006880 | S.CER C1608 JB 1H 472K-T | T | 78.9/54.1 |
| C685 | 4030006880 | S.CER C1608 JB 1H 472K-T | B | 79.1/46.9 |
| C686 | 4030006880 | S.CER C1608 JB 1H 472K-T | B | 81.6/44 |
| C687 | 4030007170 | S.CER C1608 CH 1H 221J-T | B | 75.5/11 |
| C688 | 4030007110 | S.CER C1608 CH 1H 680J-T | B | 75.5/13.4 |
| C689 | 4030007090 | S.CER C1608 CH 1H 470J-T | B | 70.8/15.2 |
| C690 | 4030007090 | S.CER C1608 CH 1H 470J-T | B | 73/15.2 |
| C691 | 4030007070 | S.CER C1608 CH 1H 330J-T | B | 71/18.7 |
| C692 | 4030007070 | S.CER C1608 CH 1H 330J-T | B | 73/18.7 |
| C693 | 4030007120 | S.CER C1608 CH 1H 820J-T | B | 75.7/21.1 |
| C695 | 4030007070 | S.CER C1608 CH 1H 330J-T | B | 72.6/27 |
| C696 | 4030007070 | S.CER C1608 CH 1H 330J-T | B | 70.9/27 |
| C697 | 4030007090 | S.CER C1608 CH 1H 470J-T | B | 75.6/29.6 |
| C698 | 4030007090 | S.CER C1608 CH 1H 470J-T | B | 75.6/31.7 |
| C699 | 4030007170 | S.CER C1608 CH 1H 221J-T | B | 75.6/35.8 |
| C700 | 4030007110 | S.CER C1608 CH 1H 680J-T | B | 75.6/33.9 |
| C711 | 4030006880 | S.CER C1608 JB 1H 472K-T | B | 62/5.2 |
| C712 | 4030006880 | S.CER C1608 JB 1H 472K-T | B | 63/7.9 |
| C713 | 4030006880 | S.CER C1608 JB 1H 472K-T | B | 58.6/8.3 |
| C714 | 4030006880 | S.CER C1608 JB 1H 472K-T | T | 68.2/54.2 |
| C715 | 4030006880 | S.CER C1608 JB 1H 472K-T | B | 68.4/42.7 |
| C716 | 4030006880 | S.CER C1608 JB 1H 472K-T | B | 70/46.3 |
| C717 | 4030007160 | S.CER C1608 CH 1H 181J-T | B | 57.7/20.1 |
| C718 | 4030007090 | S.CER C1608 CH 1H 470J-T | B | 57.7/17.6 |
| C719 | 4030007090 | S.CER C1608 CH 1H 470J-T | B | 57.4/23.2 |
| C720 | 4030007040 | S.CER C1608 CH 1H 180J-T | B | 57.4/25.2 |
| C721 | 4030007030 | S.CER C1608 CH 1H 150J-T | B | 61/27 |
| C722 | 4030007050 | S.CER C1608 CH 1H 220J-T | B | 63.2/27 |
| C723 | 4030007090 | S.CER C1608 CH 1H 470J-T | B | 57.7/33.7 |
| C724 | 4030006990 | S.CER C1608 CH 1H 080D-T | B | 57.7/31.6 |
| C725 | 4030007050 | S.CER C1608 CH 1H 220J-T | B | 63.3/37.6 |
| C726 | 4030007030 | S.CER C1608 CH 1H 150J-T | B | 61.3/37.6 |
| C727 | 4030007090 | S.CER C1608 CH 1H 470J-T | B | 57.7/38.3 |
| C728 | 4030007040 | S.CER C1608 CH 1H 180J-T | B | 57.7/40.6 |
| C729 | 4030007160 | S.CER C1608 CH 1H 181J-T | B | 57.7/46.2 |
| C730 | 4030007090 | S.CER C1608 CH 1H 470J-T | B | 57.7/48.6 |
| C741 | 4030006880 | S.CER C1608 JB 1H 472K-T | B | 40.8/5.4 |
| C742 | 4030006880 | S.CER C1608 JB 1H 472K-T | B | 42.7/3.4 |
| C743 | 4030006880 | S.CER C1608 JB 1H 472K-T | B | 37/8 |
| C744 | 4030006880 | S.CER C1608 JB 1H 472K-T | T | 46.2/54.2 |
| C745 | 4030006880 | S.CER C1608 JB 1H 472K-T | T | 46.2/46.6 |
| C746 | 4030006880 | S.CER C1608 JB 1H 472K-T | B | 49.5/50.4 |
| C747 | 4030007140 | S.CER C1608 CH 1H 121J-T | B | 41.2/13.3 |
| C748 | 4030007040 | S.CER C1608 CH 1H 180J-T | B | 41.2/10.8 |
| C749 | 4030007070 | S.CER C1608 CH 1H 330J-T | B | 41/18.4 |
| C750 | 4030007040 | S.CER C1608 CH 1H 180J-T | B | 41/16.4 |
| C751 | 4030007010 | S.CER C1608 CH 1H 100D-T | B | 35.3/17.1 |
| C752 | 4030007070 | S.CER C1608 CH 1H 330J-T | B | 37.5/17.1 |
| C753 | 4030007090 | S.CER C1608 CH 1H 470J-T | B | 41/20.3 |
| C755 | 4030007070 | S.CER C1608 CH 1H 330J-T | B | 35.4/25.5 |
| C756 | 4030007010 | S.CER C1608 CH 1H 100D-T | B | 37.5/25.5 |
| C757 | 4030007070 | S.CER C1608 CH 1H 330J-T | B | 41/27.5 |
| C758 | 4030007040 | S.CER C1608 CH 1H 180J-T | B | 41.1/29.4 |
| C759 | 4030007140 | S.CER C1608 CH 1H 121J-T | B | 41.2/32.6 |
| C760 | 4030007040 | S.CER C1608 CH 1H 180J-T | B | 41.2/34.9 |
| C771 | 4030006880 | S.CER C1608 JB 1H 472K-T | B | 27.6/5.5 |
| C772 | 4030006880 | S.CER C1608 JB 1H 472K-T | B | 29.2/8.5 |
| C773 | 4030006880 | S.CER C1608 JB 1H 472K-T | B | 23.5/8.2 |
| C774 | 4030006880 | S.CER C1608 JB 1H 472K-T | T | 35.9/54.4 |
| C775 | 4030006880 | S.CER C1608 JB 1H 472K-T | B | 34.2/44.5 |
| C776 | 4030006880 | S.CER C1608 JB 1H 472K-T | B | 36.4/46.1 |
| C777 | 4030007130 | S.CER C1608 CH 1H 101J-T | B | 24.1/20 |
| C778 | 4030007030 | S.CER C1608 CH 1H 150J-T | B | 24.1/17.9 |
| C779 | 4030007050 | S.CER C1608 CH 1H 220J-T | B | 24/23.6 |
| C780 | 4030007020 | S.CER C1608 CH 1H 120J-T | B | 23.9/25.6 |
| C781 | 4030007050 | S.CER C1608 CH 1H 220J-T | B | 27.5/26.4 |
| C783 | 4030007050 | S.CER C1608 CH 1H 220J-T | B | 24.2/32.3 |
| C784 | 4030006980 | S.CER C1608 CH 1H 070D-T | B | 24.2/34.3 |
| C785 | 4030007050 | S.CER C1608 CH 1H 220J-T | B | 27.8/37.7 |
| C787 | 4030007050 | S.CER C1608 CH 1H 220J-T | B | 24.5/38.5 |
| C788 | 4030007020 | S.CER C1608 CH 1H 120J-T | B | 24.5/40.7 |
| C789 | 4030007130 | S.CER C1608 CH 1H 101J-T | B | 24/46.8 |
| C790 | 4030007030 | S.CER C1608 CH 1H 150J-T | B | 24.1/49.1 |
| C801 | 4030006880 | S.CER C1608 JB 1H 472K-T | B | 218.8/46.3 |
| C802 | 4030006880 | S.CER C1608 JB 1H 472K-T | B | 223/44.4 |
| C803 | 4030006880 | S.CER C1608 JB 1H 472K-T | B | 211.6/44.7 |
| C804 | 4030006880 | S.CER C1608 JB 1H 472K-T | B | 208.8/27.5 |
| C805 | 4030006880 | S.CER C1608 JB 1H 472K-T | B | 208.3/43.7 |
| C806 | 4030006880 | S.CER C1608 JB 1H 472K-T | B | 203.8/46.1 |
| C813 | 4030007150 | S.CER C1608 CH 1H 151J-T | T | 212.6/41.2 |
| C816 | 4030007030 | S.CER C1608 CH 1H 150J-T | T | 213.7/39.1 |
| C820 | 4030007130 | S.CER C1608 CH 1H 101J-T | T | 211.3/39.8 |
| C821 | 4030007040 | S.CER C1608 CH 1H 180J-T | T | 208/39.8 |
| C831 | 4030006880 | S.CER C1608 JB 1H 472K-T | T | 218.9/22.1 |
| C832 | 4030006880 | S.CER C1608 JB 1H 472K-T | T | 218.9/20.8 |
| C833 | 4030006880 | S.CER C1608 JB 1H 472K-T | B | 214.5/27.5 |
| C834 | 4030006880 | S.CER C1608 JB 1H 472K-T | B | 209.8/46.9 |
| C835 | 4030006880 | S.CER C1608 JB 1H 472K-T | T | 201/20.7 |
| C836 | 4030006880 | S.CER C1608 JB 1H 472K-T | T | 203.7/20.7 |
| C837 | 4030007100 | S.CER C1608 CH 1H 560J-T | T | 212/30 |
| C839 | 4030007110 | S.CER C1608 CH 1H 680J-T | T | 207.9/30 |
| C841 | 4030007100 | S.CER C1608 CH 1H 560J-T | T | 208.7/25.1 |

M.=Mounted side (T: Mounted on the Top side, B: Mounted on the Bottom side)
S.=Surface mount

## [BPF UNIT]

| REF NO. | ORDER NO. | DESCRIPTION | M. | H/V LOCATION |
|---|---|---|---|---|
| C853 | 4030006880 | S.CER C1608 JB 1H 472K-T | B | 188.8/25.1 |
| C854 | 4030006880 | S.CER C1608 JB 1H 472K-T | B | 189.5/27.6 |
| C855 | 4030006880 | S.CER C1608 JB 1H 472K-T | T | 189/25.3 |
| C856 | 4030006880 | S.CER C1608 JB 1H 472K-T | B | 189.5/30.5 |
| C857 | 4030006880 | S.CER C1608 JB 1H 472K-T | T | 189/30.5 |
| C858 | 4030006880 | S.CER C1608 JB 1H 472K-T | B | 189.5/33.8 |
| C859 | 4030006880 | S.CER C1608 JB 1H 472K-T | T | 189/36.7 |
| C860 | 4030006880 | S.CER C1608 JB 1H 472K-T | B | 189.5/37.2 |
| C861 | 4030006880 | S.CER C1608 JB 1H 472K-T | B | 189.5/40 |
| C862 | 4030006880 | S.CER C1608 JB 1H 472K-T | T | 189/42.9 |
| C863 | 4030006880 | S.CER C1608 JB 1H 472K-T | B | 189.5/42.9 |
| C864 | 4030006880 | S.CER C1608 JB 1H 472K-T | B | 189.5/45.8 |
| C865 | 4030006880 | S.CER C1608 JB 1H 472K-T | T | 194/50.2 |
| C876 | 4030006880 | S.CER C1608 JB 1H 472K-T | B | 241.3/19.5 |
| C878 | 4030010760 | S.CER C1608 CH 1H 331J-T | B | 245.1/17.9 |
| C879 | 4030007050 | S.CER C1608 CH 1H 220J-T | B | 245.1/19.5 |
| C880 | 4030009520 | S.CER C1608 CH 1H 020B-T | B | 247.9/19.5 |
| C881 | 4030010210 | S.CER C3216 JB 1C 105M-T | B | 244/34 |
| C900 | 4030006880 | S.CER C1608 JB 1H 472K-T | B | 215.5/99.5 |
| C901 | 4030005110 | S.CER C2012 JB 1E 473K-T | T | 15.1/26.8 |
| C902 | 4510008520 | S.ELE EEE1CA470SP | T | 12.3/21.7 |
| C903 | 4030005110 | S.CER C2012 JB 1E 473K-T | B | 12.3/12.9 |
| C904 | 4510009150 | S.ELE EEE1EA470WP | T | 12.3/13.4 |
| C905 | 4030006880 | S.CER C1608 JB 1H 472K-T | B | 244.7/94 |
| C906 | 4030006880 | S.CER C1608 JB 1H 472K-T | B | 244.7/91.2 |
| C907 | 4030006900 | S.CER C1608 JB 1H 103K-T | B | 213.8/106.2 |
| C908 | 4030011600 | S.CER C1608 JB 1E 104K-T | B | 212.8/115.6 |
| C909 | 4030006880 | S.CER C1608 JB 1H 472K-T | B | 218.7/113.5 |
| C910 | 4030006900 | S.CER C1608 JB 1H 103K-T | B | 215.5/117.9 |
| C911 | 4030006900 | S.CER C1608 JB 1H 103K-T | B | 210.6/106.3 |
| C912 | 4030006880 | S.CER C1608 JB 1H 472K-T | B | 201.9/99.6 |
| C914 | 4030006880 | S.CER C1608 JB 1H 472K-T | B | 194.7/99.4 |
| C915 | 4030006900 | S.CER C1608 JB 1H 103K-T | B | 192.6/110.6 |
| C916 | 4030006880 | S.CER C1608 JB 1H 472K-T | T | 200.3/118.3 |
| C917 | 4030006900 | S.CER C1608 JB 1H 103K-T | T | 197.8/117.6 |
| C918 | 4030006900 | S.CER C1608 JB 1H 103K-T | B | 187.3/106.3 |
| C919 | 4030006880 | S.CER C1608 JB 1H 472K-T | B | 180/99.9 |
| C921 | 4030006880 | S.CER C1608 JB 1H 472K-T | T | 201.6/118.3 |
| C922 | 4030011600 | S.CER C1608 JB 1E 104K-T | T | 208.5/117.4 |
| C923 | 4030011600 | S.CER C1608 JB 1E 104K-T | T | 212.3/117.4 |
| C924 | 4030011600 | S.CER C1608 JB 1E 104K-T | B | 192.9/116.4 |
| C925 | 4030011600 | S.CER C1608 JB 1E 104K-T | T | 187.7/117.4 |
| C926 | 4030011600 | S.CER C1608 JB 1E 104K-T | T | 191.6/117.5 |
| C927 | 4030006960 | S.CER C1608 CH 1H 050C-T | B | 209.4/113.7 |
| C928 | 4030006960 | S.CER C1608 CH 1H 050C-T | B | 187.5/114.2 |
| C950 | 4030006880 | S.CER C1608 JB 1H 472K-T | B | 206.3/4.6 |
| C951 | 4030006900 | S.CER C1608 JB 1H 103K-T | B | 215.7/17.8 |
| C952 | 4030011600 | S.CER C1608 JB 1E 104K-T | B | 211.9/20 |
| C953 | 4030006880 | S.CER C1608 JB 1H 472K-T | B | 205.3/2.8 |
| C954 | 4030006900 | S.CER C1608 JB 1H 103K-T | B | 218.6/2.5 |
| C955 | 4030006900 | S.CER C1608 JB 1H 103K-T | B | 208.6/11.4 |
| C956 | 4030006880 | S.CER C1608 JB 1H 472K-T | T | 203.5/2.3 |
| C958 | 4030006880 | S.CER C1608 JB 1H 472K-T | B | 190/4.9 |
| C959 | 4030006900 | S.CER C1608 JB 1H 103K-T | B | 195.2/16.5 |
| C960 | 4030006880 | S.CER C1608 JB 1H 472K-T | B | 196.3/2.3 |
| C961 | 4030006900 | S.CER C1608 JB 1H 103K-T | B | 202.2/4 |
| C962 | 4030006900 | S.CER C1608 JB 1H 103K-T | B | 184/16.5 |
| C963 | 4030006880 | S.CER C1608 JB 1H 472K-T | B | 181/3.9 |
| C965 | 4030006880 | S.CER C1608 JB 1H 472K-T | T | 208.4/3.9 |
| C967 | 4030011600 | S.CER C1608 JB 1E 104K-T | T | 209/21.4 |
| C968 | 4030011600 | S.CER C1608 JB 1E 104K-T | T | 213/21.4 |
| C969 | 4030011600 | S.CER C1608 JB 1E 104K-T | B | 191.6/19.9 |
| C970 | 4030011600 | S.CER C1608 JB 1E 104K-T | T | 187.9/21.4 |
| C971 | 4030011600 | S.CER C1608 JB 1E 104K-T | T | 193/19.8 |
| C972 | 4030006960 | S.CER C1608 CH 1H 050C-T | B | 208.3/19.3 |
| C973 | 4030006960 | S.CER C1608 CH 1H 050C-T | B | 187.7/19.3 |
| C974 | 4030006880 | S.CER C1608 JB 1H 472K-T | B | 235.8/11.5 |
| | | | | |
| RL1 | 6330001750 | RLY FTR-B4CA012Z | | |
| RL2 | 6330001750 | RLY FTR-B4CA012Z | | |
| RL21 | 6330001750 | RLY FTR-B4CA012Z | | |
| RL22 | 6330001750 | RLY FTR-B4CA012Z | | |
| RL51 | 6330001750 | RLY FTR-B4CA012Z | | |
| RL52 | 6330001750 | RLY FTR-B4CA012Z | | |
| RL81 | 6330001750 | RLY FTR-B4CA012Z | | |
| RL82 | 6330001750 | RLY FTR-B4CA012Z | | |
| RL111 | 6330001750 | RLY FTR-B4CA012Z | | |
| RL112 | 6330001750 | RLY FTR-B4CA012Z | | |
| RL141 | 6330001750 | RLY FTR-B4CA012Z | | |
| RL142 | 6330001750 | RLY FTR-B4CA012Z | | |
| RL171 | 6330001750 | RLY FTR-B4CA012Z | | |
| RL172 | 6330001750 | RLY FTR-B4CA012Z | | |
| RL201 | 6330001750 | RLY FTR-B4CA012Z | | |
| RL202 | 6330001750 | RLY FTR-B4CA012Z | | |
| RL231 | 6330001750 | RLY FTR-B4CA012Z | | |
| RL232 | 6330001750 | RLY FTR-B4CA012Z | | |
| RL261 | 6330001750 | RLY FTR-B4CA012Z | | |
| RL262 | 6330001750 | RLY FTR-B4CA012Z | | |
| RL291 | 6330001750 | RLY FTR-B4CA012Z | | |
| RL292 | 6330001750 | RLY FTR-B4CA012Z | | |
| RL321 | 6330001750 | RLY FTR-B4CA012Z | | |
| RL322 | 6330001750 | RLY FTR-B4CA012Z | | |
| RL351 | 6330001750 | RLY FTR-B4CA012Z | | |
| RL352 | 6330001750 | RLY FTR-B4CA012Z | | |
| RL353 | 6330001750 | RLY FTR-B4CA012Z | | |
| RL354 | 6330001750 | RLY FTR-B4CA012Z | | |
| RL355 | 6330001750 | RLY FTR-B4CA012Z | | |
| RL371 | 6330001750 | RLY FTR-B4CA012Z | | |
| RL381 | 6330001770 | RLY SIP-1A-12Y | | |
| RL401 | 6330001770 | RLY SIP-1A-12Y | | |
| RL402 | 6330001750 | RLY FTR-B4CA012Z | | |
| RL501 | 6330001750 | RLY FTR-B4CA012Z | | |
| RL502 | 6330001750 | RLY FTR-B4CA012Z | | |

## [BPF UNIT]

| REF NO. | ORDER NO. | DESCRIPTION | M. | H/V LOCATION |
|---|---|---|---|---|
| RL531 | 6330001750 | RLY FTR-B4CA012Z | | |
| RL532 | 6330001750 | RLY FTR-B4CA012Z | | |
| RL561 | 6330001750 | RLY FTR-B4CA012Z | | |
| RL562 | 6330001750 | RLY FTR-B4CA012Z | | |
| RL591 | 6330001750 | RLY FTR-B4CA012Z | | |
| RL592 | 6330001750 | RLY FTR-B4CA012Z | | |
| RL621 | 6330001750 | RLY FTR-B4CA012Z | | |
| RL622 | 6330001750 | RLY FTR-B4CA012Z | | |
| RL651 | 6330001750 | RLY FTR-B4CA012Z | | |
| RL652 | 6330001750 | RLY FTR-B4CA012Z | | |
| RL681 | 6330001750 | RLY FTR-B4CA012Z | | |
| RL682 | 6330001750 | RLY FTR-B4CA012Z | | |
| RL711 | 6330001750 | RLY FTR-B4CA012Z | | |
| RL712 | 6330001750 | RLY FTR-B4CA012Z | | |
| RL741 | 6330001750 | RLY FTR-B4CA012Z | | |
| RL742 | 6330001750 | RLY FTR-B4CA012Z | | |
| RL771 | 6330001750 | RLY FTR-B4CA012Z | | |
| RL772 | 6330001750 | RLY FTR-B4CA012Z | | |
| RL801 | 6330001750 | RLY FTR-B4CA012Z | | |
| RL802 | 6330001750 | RLY FTR-B4CA012Z | | |
| RL831 | 6330001750 | RLY FTR-B4CA012Z | | |
| RL832 | 6330001750 | RLY FTR-B4CA012Z | | |
| RL851 | 6330001750 | RLY FTR-B4CA012Z | | |
| RL852 | 6330001750 | RLY FTR-B4CA012Z | | |
| RL853 | 6330001750 | RLY FTR-B4CA012Z | | |
| RL854 | 6330001750 | RLY FTR-B4CA012Z | | |
| RL855 | 6330001750 | RLY FTR-B4CA012Z | | |
| RL871 | 6330001770 | RLY SIP-1A-12Y | | |
| RL900 | 6330001750 | RLY FTR-B4CA012Z | | |
| RL901 | 6330001750 | RLY FTR-B4CA012Z | | |
| RL902 | 6330001750 | RLY FTR-B4CA012Z | | |
| RL903 | 6330001750 | RLY FTR-B4CA012Z | | |
| RL950 | 6330001750 | RLY FTR-B4CA012Z | | |
| RL951 | 6330001750 | RLY FTR-B4CA012Z | | |
| RL952 | 6330001750 | RLY FTR-B4CA012Z | | |
| RL953 | 6330001750 | RLY FTR-B4CA012Z | | |
| RL954 | 6330001750 | RLY FTR-B4CA012Z | | |
| | | | | |
| J1 | 6510020521 | S.CNR 52808-1271 (1290) | T | 6/17 |
| J101 | 6510007020 | CNR TMP-J01X-V6 | | |
| J102 | 6510007020 | CNR TMP-J01X-V6 | | |
| J103 | 6510023750 | CNR 01K1971-10 | | |
| J104 | 6510023750 | CNR 01K1971-10 | | |
| J105 | 6510023750 | CNR 01K1971-10 | | |
| J106 | 6510007020 | CNR TMP-J01X-V6 | | |
| J107 | 6510007020 | CNR TMP-J01X-V6 | | |
| J108 | 6510007020 | CNR TMP-J01X-V6 | | |
| J504 | 6510023750 | CNR 01K1971-10 | | |
| J505 | 6510023750 | CNR 01K1971-10 | | |
| J506 | 6510007020 | CNR TMP-J01X-V6 | | |
| J601 | 6510007020 | CNR TMP-J01X-V6 | | |
| J602 | 6510007020 | CNR TMP-J01X-V6 | | |
| | | | | |
| EP900 | 6910012350 | S.BEA MMZ1608Y 102BT | B | 218.9/98.8 |
| EP901 | 6910012350 | S.BEA MMZ1608Y 102BT | B | 204.2/100.3 |
| EP902 | 6910012350 | S.BEA MMZ1608Y 102BT | B | 197.2/98.7 |
| EP903 | 6910012350 | S.BEA MMZ1608Y 102BT | B | 189.7/100.1 |
| EP950 | 6910012350 | S.BEA MMZ1608Y 102BT | B | 208.8/3.5 |
| EP951 | 6910012350 | S.BEA MMZ1608Y 102BT | T | 205.4/3.2 |
| EP952 | 6910012350 | S.BEA MMZ1608Y 102BT | B | 193.3/3 |
| EP953 | 6910012350 | S.BEA MMZ1608Y 102BT | B | 184.6/3.8 |

M.=Mounted side (T: Mounted on the Top side, B: Mounted on the Bottom side)
S.=Surface mount

## [MAIN UNIT]

| REF NO. | ORDER NO. | DESCRIPTION | | M. | H/V LOCATION |
|---|---|---|---|---|---|
| IC1 | 1110003870 | S.IC | NJM2058M-TE1 | T | 226/83.5 |
| IC2 | 1110001901 | S.IC | uPC4570G2-E1-A | T | 187/68.8 |
| IC3 | 1130005641 | S.IC | TC4W53F (TE12L,F) | T | 191.1/75.2 |
| IC4 | 1110006300 | S.IC | NJM2172V-TE1 | T | 186.6/85.7 |
| IC5 | 1130005641 | S.IC | TC4W53F (TE12L,F) | T | 184.3/75.2 |
| IC50 | 1190001930 | S.IC | PS7122AL-1A-E3 | B | 114.4/109.1 |
| IC60 | 1110003870 | S.IC | NJM2058M-TE1 | B | 116.1/87.4 |
| IC61 | 1110003870 | S.IC | NJM2058M-TE1 | B | 129.6/94.8 |
| IC100 | 1130005641 | S.IC | TC4W53F (TE12L,F) | T | 211.8/91 |
| IC101 | 1130005641 | S.IC | TC4W53F (TE12L,F) | T | 205/91 |
| IC102 | 1110001901 | S.IC | uPC4570G2-E1-A | T | 209.7/68.5 |
| IC104 | 1110001901 | S.IC | uPC4570G2-E1-A | T | 209.8/43.4 |
| IC105 | 1110006300 | S.IC | NJM2172V-TE1 | T | 220.4/58.4 |
| IC140 | 1110006141 | IC | LA4485-E | | |
| IC180 | 1110006300 | S.IC | NJM2172V-TE1 | T | 187/57.6 |
| IC181 | 1130005641 | S.IC | TC4W53F (TE12L,F) | T | 186.9/40.3 |
| IC182 | 1110006160 | S.IC | TPA6111A2DGN | T | 186.8/35.8 |
| IC191 | 1130005641 | S.IC | TC4W53F (TE12L,F) | T | 193.3/30 |
| IC192 | 1130005641 | S.IC | TC4W53F (TE12L,F) | T | 180.6/30.2 |
| IC201 | 1130005641 | S.IC | TC4W53F (TE12L,F) | T | 147.7/71.6 |
| IC210 | 1110006300 | S.IC | NJM2172V-TE1 | T | 160.5/90.1 |
| IC230 | 1110001901 | S.IC | uPC4570G2-E1-A | T | 68.3/22.2 |
| IC250 | 1130011530 | S.IC | CD74HC4094M96 | T | 137.4/32.2 |
| IC251 | 1160000131 | S.IC | TD62783AFG (S,EL) | T | 125.7/34 |
| IC260 | 1130011530 | S.IC | CD74HC4094M96 | T | 137.4/46.6 |
| IC261 | 1160000131 | S.IC | TD62783AFG (S,EL) | T | 125.7/48.3 |
| IC290 | 1130011530 | S.IC | CD74HC4094M96 | T | 149.4/35.6 |
| IC291 | 1160000131 | S.IC | TD62783AFG (S,EL) | T | 161.1/34 |
| IC310 | 1130011530 | S.IC | CD74HC4094M96 | T | 149.4/50.1 |
| IC311 | 1160000131 | S.IC | TD62783AFG (S,EL) | T | 161.1/48.4 |
| IC330 | 1130012000 | S.IC | M62352AGP C60Q | T | 150.4/61 |
| IC331 | 1130012000 | S.IC | M62352AGP C60Q | T | 161.1/61.1 |
| IC450 | 1180002650 | S.REG | SI-3012KS-TL | B | 212.6/31.3 |
| IC451 | 1180002650 | S.REG | SI-3012KS-TL | B | 160/15.2 |
| IC452 | 1180002650 | S.REG | SI-3012KS-TL | B | 93.6/51.5 |
| IC460 | 1130005641 | S.IC | TC4W53F (TE12L,F) | T | 147.7/80 |
| IC490 | 1130005641 | S.IC | TC4W53F (TE12L,F) | B | 163.4/61.6 |
| IC491 | 1110003870 | S.IC | NJM2058M-TE1 | B | 236.2/21.9 |
| IC495 | 1130011990 | S.IC | SN74LVC1G08DCKR | T | 14.6/122.5 |
| IC501 | 1110006100 | S.IC | NJM5534MD-TE1 | T | 22.6/66.4 |
| IC502 | 1110006100 | S.IC | NJM5534MD-TE1 | T | 22.6/78.5 |
| IC503 | 1110005461 | S.IC | TA4107F (TE12L,F) | T | 23.2/91.9 |
| IC550 | 1180001771 | S.IC | TA79L05F (TE12L,F) | T | 125.5/103.1 |
| IC820 | 1110006131 | S.IC | uPC4094G2-E1-A | T | 83.5/59.3 |
| IC821 | 1110006300 | S.IC | NJM2172V-TE1 | T | 160.5/74.8 |
| | | | | | |
| Q1 | 1590001050 | S.TR | DTC114TUA T106 | B | 217/105.3 |
| Q2 | 1590001050 | S.TR | DTC114TUA T106 | B | 174.9/102.8 |
| Q3 | 1530002060 | S.TR | 2SC4081 T106 R | B | 161.8/96.7 |
| Q4 | 1530002060 | S.TR | 2SC4081 T106 R | B | 172.7/98 |
| Q5 | 1590001330 | S.TR | DTA114EUA T106 | B | 167.1/92 |
| Q6 | 1540000441 | S.TR | 2SD1619T-TD-E | B | 166.4/102.1 |
| Q7 | 1530002060 | S.TR | 2SC4081 T106 R | B | 147.8/110.4 |
| Q8 | 1530002060 | S.TR | 2SC4081 T106 R | T | 222.2/99.7 |
| Q9 | 1530002060 | S.TR | 2SC4081 T106 R | T | 179.3/101 |
| Q50 | 1590001050 | S.TR | DTC114TUA T106 | B | 119/96.6 |
| Q51 | 1590001050 | S.TR | DTC114TUA T106 | B | 118.6/100.4 |
| Q52 | 1530002060 | S.TR | 2SC4081 T106 R | T | 83.5/107.6 |
| Q60 | 1590002710 | S.TR | UMH11NTN | T | 118.7/87.6 |
| Q61 | 1590002150 | S.TR | DTC144TE TL | T | 117.8/80.2 |
| Q62 | 1510000510 | S.TR | 2SA1576A T106R | T | 123.1/93.8 |
| Q63 | 1590001050 | S.TR | DTC114TUA T106 | T | 120.2/79.9 |
| Q64 | 1590002430 | S.TR | DTA144EE TL | T | 120.2/82.2 |
| Q100 | 1590001451 | S.FET | 2SJ144-GR (TE85R,F) | T | 214.2/79.1 |
| Q101 | 1590001451 | S.FET | 2SJ144-GR (TE85R,F) | T | 204.6/79.1 |
| Q131 | 1560001131 | S.FET | CPH3403-TL-E | T | 228.6/70.9 |
| Q132 | 1560001131 | S.FET | CPH3403-TL-E | T | 233.4/47.7 |
| Q140 | 1540000471 | S.TR | 2SD1801S-TL-E | T | 241.8/37.3 |
| Q141 | 1590000680 | S.TR | DTC114EUA T106 | B | 247.8/92.4 |
| Q142 | 1590000680 | S.TR | DTC114EUA T106 | B | 239.9/92.4 |
| Q143 | 1590001050 | S.TR | DTC114TUA T106 | T | 255.3/55.4 |
| Q351 | 1560001260 | S.FET | 2SK3018 T106 | T | 129.8/85.1 |
| Q352 | 1530002060 | S.TR | 2SC4081 T106 R | T | 132.7/85.1 |
| Q474 | 1510000510 | S.TR | 2SA1576A T106R | T | 132.4/77.2 |
| Q476 | 1590001050 | S.TR | DTC114TUA T106 | T | 129.4/77.1 |
| Q490 | 1590000680 | S.TR | DTC114EUA T106 | B | 232.2/4.5 |
| Q491 | 1520000460 | S.TR | 2SB1132 T100 R | B | 224.3/4.2 |
| Q501 | 1580000751 | S.FET | 3SK294 (TE85L,F) | B | 26.9/91.8 |
| Q502 | 1590000680 | S.TR | DTC114EUA T106 | T | 47.1/79.4 |
| Q503 | 1590002710 | S.TR | UMH11NTN | T | 47.3/75.9 |
| Q504 | 1560000561 | S.FET | 2SK882-GR (TE85L,F) | B | 49.3/91.2 |
| Q506 | 1560000561 | S.FET | 2SK882-GR (TE85L,F) | B | 102.7/82.6 |
| Q507 | 1530003151 | S.TR | 2SC4673D-TD-E | T | 103.9/65.5 |
| Q508 | 1530003842 | S.TR | 2SC5501A-4-TR-E | T | 58.8/68.8 |
| Q801 | 1530003851 | S.TR | 2SC5551A-F-E | T | 43.1/18.2 |
| Q802 | 1520000531 | S.TR | 2SB1119S-TD-E | B | 89.9/83.7 |
| Q803 | 1590000680 | S.TR | DTC114EUA T106 | B | 83.7/84.8 |
| Q804 | 1590002710 | S.TR | UMH11NTN | T | 33.9/20.3 |
| Q805 | 1590000680 | S.TR | DTC114EUA T106 | T | 30.9/21.6 |
| Q806 | 1530002060 | S.TR | 2SC4081 T106 R | T | 35.5/73.8 |
| Q808 | 1590001330 | S.TR | DTA114EUA T106 | T | 45.6/70.2 |
| Q809 | 1590000680 | S.TR | DTC114EUA T106 | T | 48.7/70.2 |
| Q810 | 1530002060 | S.TR | 2SC4081 T106 R | T | 231.4/34.2 |
| | | | | | |
| D1 | 1750000550 | S.DIO | 1SS355 TE-17 | B | 162.9/104.2 |
| D2 | 1750000550 | S.DIO | 1SS355 TE-17 | B | 170.6/104.2 |
| D3 | 1790001750 | S.DIO | DSM3MA4 | B | 65.5/122.7 |
| D4 | 1790001750 | S.DIO | DSM3MA4 | B | 65.5/113.6 |
| D50 | 1750000550 | S.DIO | 1SS355 TE-17 | B | 114.5/100.6 |
| D51 | 1790001670 | S.DIO | RB706F-40T106 | T | 90.8/112.8 |
| D52 | 1750000550 | S.DIO | 1SS355 TE-17 | T | 88.4/112.8 |
| D60 | 1750000550 | S.DIO | 1SS355 TE-17 | B | 126.8/86.8 |

## [MAIN UNIT]

| REF NO. | ORDER NO. | DESCRIPTION | | M. | H/V LOCATION |
|---|---|---|---|---|---|
| D61 | 1750000550 | S.DIO | 1SS355 TE-17 | B | 126.6/83.4 |
| D62 | 1750000550 | S.DIO | 1SS355 TE-17 | B | 120.6/77.6 |
| D63 | 1750000550 | S.DIO | 1SS355 TE-17 | B | 116.5/93.6 |
| D64 | 1790001240 | S.DIO | MA2S7280G-(TX) | B | 108.1/78.3 |
| D65 | 1750000550 | S.DIO | 1SS355 TE-17 | B | 123.1/100.1 |
| D66 | 1750000550 | S.DIO | 1SS355 TE-17 | B | 134.3/89.4 |
| D67 | 1730002340 | S.ZEN | MA8047-M (TX) | B | 122.8/95.8 |
| D140 | 1750000550 | S.DIO | 1SS355 TE-17 | B | 247.8/95.1 |
| D141 | 1750000550 | S.DIO | 1SS355 TE-17 | B | 239.9/95.1 |
| D241 | 1730002280 | S.ZEN | MA8091-M (TX) | T | 231.2/32 |
| D351 | 1790001250 | S.DIO | MA2S1110G-(TX) | T | 129.7/83.2 |
| D450 | 1710000840 | S.DIO | 1SR154-400 TE25 | B | 218.9/28 |
| D451 | 1710000840 | S.DIO | 1SR154-400 TE25 | B | 153.4/16 |
| D452 | 1710000840 | S.DIO | 1SR154-400 TE25 | B | 93.6/58 |
| D490 | 1790000620 | S.DIO | MA77 (TX) | B | 237.5/5.4 |
| D501 | 1790000620 | S.DIO | MA77 (TX) | B | 34.3/94.1 |
| D502 | 1790000620 | S.DIO | MA77 (TX) | B | 34.3/91.8 |
| D503 | 1790000620 | S.DIO | MA77 (TX) | B | 46.6/91.4 |
| D504 | 1790000620 | S.DIO | MA77 (TX) | B | 46.7/85.3 |
| D505 | 1750000431 | S.DIO | HSB88WSTR-E | T | 70.2/90.8 |
| D506 | 1750000431 | S.DIO | HSB88WSTR-E | T | 84.3/69.4 |
| D601 | 1790000620 | S.DIO | MA77 (TX) | B | 34.7/54 |
| D602 | 1790000620 | S.DIO | MA77 (TX) | B | 34.7/33 |
| D603 | 1790000620 | S.DIO | MA77 (TX) | B | 45.5/54 |
| D604 | 1790000620 | S.DIO | MA77 (TX) | B | 45.5/33 |
| D605 | 1790000620 | S.DIO | MA77 (TX) | B | 56.3/54 |
| D606 | 1790000620 | S.DIO | MA77 (TX) | B | 56.3/33 |
| D607 | 1790000620 | S.DIO | MA77 (TX) | B | 67.1/54 |
| D608 | 1790000620 | S.DIO | MA77 (TX) | B | 67.1/33 |
| D609 | 1790000620 | S.DIO | MA77 (TX) | B | 78/54 |
| D610 | 1790000620 | S.DIO | MA77 (TX) | B | 78/33 |
| D611 | 1790000620 | S.DIO | MA77 (TX) | T | 40.8/54 |
| D612 | 1790000620 | S.DIO | MA77 (TX) | T | 40.8/33 |
| D613 | 1790000620 | S.DIO | MA77 (TX) | T | 48.7/54 |
| D614 | 1790000620 | S.DIO | MA77 (TX) | T | 49.8/33 |
| D615 | 1790000620 | S.DIO | MA77 (TX) | T | 58.9/54 |
| D616 | 1790000620 | S.DIO | MA77 (TX) | T | 58.8/33 |
| D617 | 1790000620 | S.DIO | MA77 (TX) | T | 67.8/54 |
| D618 | 1790000620 | S.DIO | MA77 (TX) | T | 67.8/33 |
| D619 | 1790000620 | S.DIO | MA77 (TX) | T | 76.8/54 |
| D620 | 1790000620 | S.DIO | MA77 (TX) | T | 76.8/33 |
| D801 | 1790000620 | S.DIO | MA77 (TX) | T | 36.5/29.9 |
| D802 | 1750000581 | S.DIO | 1SV307 (TPH3,F) | T | 34.7/29.9 |
| D806 | 1790000620 | S.DIO | MA77 (TX) | B | 84.2/76.6 |
| D820 | 1750000581 | S.DIO | 1SV307 (TPH3,F) | T | 86/33 |
| | | | | | |
| FI501 | 2020001070 | CER | CFWLA455KDFA-B0 (CFWS455D) | | |
| FI502 | 2020001510 | CER | CFWLA455KJFA-B0 (CFWS455IT) | | |
| FI503 | 2010002580 | S.FIL | FL-348 (64.455 MHz) | T | 93.4/90.8 |
| | | | | | |
| L1 | 6200003261 | S.COL | NLV32T-101J | B | 211.7/110.3 |
| L2 | 6200003261 | S.COL | NLV32T-101J | B | 222.2/110.3 |
| L3 | 6200003950 | S.COL | HF50ACC 322513-T | B | 204.7/110.3 |
| L4 | 6200003261 | S.COL | NLV32T-101J | T | 218.7/109.6 |
| L5 | 6200003261 | S.COL | NLV32T-101J | B | 225.7/110.3 |
| L6 | 6200003261 | S.COL | NLV32T-101J | B | 215.2/110.3 |
| L7 | 6200003950 | S.COL | HF50ACC 322513-T | T | 208.2/109.6 |
| L8 | 6200003261 | S.COL | NLV32T-101J | B | 200.4/110.3 |
| L9 | 6200003950 | S.COL | HF50ACC 322513-T | B | 193.4/110 |
| L10 | 6200003261 | S.COL | NLV32T-101J | B | 196.9/110.3 |
| L11 | 6200003261 | S.COL | NLV32T-101J | B | 169.7/110.3 |
| L12 | 6200003261 | S.COL | NLV32T-101J | B | 180.2/110.3 |
| L13 | 6200003950 | S.COL | HF50ACC 322513-T | B | 162.7/110.3 |
| L14 | 6200003261 | S.COL | NLV32T-101J | T | 176.7/109.7 |
| L15 | 6200003261 | S.COL | NLV32T-101J | B | 183.7/110.3 |
| L16 | 6200003261 | S.COL | NLV32T-101J | B | 173.2/110.3 |
| L17 | 6200003950 | S.COL | HF50ACC 322513-T | T | 166.2/109.2 |
| L18 | 6200003261 | S.COL | NLV32T-101J | B | 158.4/110.3 |
| L19 | 6200003950 | S.COL | HF50ACC 322513-T | B | 151.4/110 |
| L20 | 6200003261 | S.COL | NLV32T-101J | B | 154.9/110.3 |
| L21 | 6200003950 | S.COL | HF50ACC 322513-T | B | 211.7/124.6 |
| L22 | 6200003950 | S.COL | HF50ACC 322513-T | B | 169.7/124.5 |
| L31 | 6200003261 | S.COL | NLV32T-101J | B | 194.2/88.9 |
| L50 | 6200003261 | S.COL | NLV32T-101J | B | 139.6/122.6 |
| L51 | 6200003590 | S.COL | EXCCL3225U1 | B | 122.1/107.2 |
| L52 | 6200003261 | S.COL | NLV32T-101J | B | 77.2/122.3 |
| L53 | 6200003261 | S.COL | NLV32T-101J | B | 77.2/117.4 |
| L54 | 6200003261 | S.COL | NLV32T-101J | T | 85.8/112.8 |
| L55 | 6200003261 | S.COL | NLV32T-101J | B | 95.6/107.2 |
| L56 | 6200003590 | S.COL | EXCCL3225U1 | B | 63.9/107.4 |
| L80 | 6200009790 | S.COL | BLM31PG121SN1 | B | 53.4/118.4 |
| L140 | 6200003261 | S.COL | NLV32T-101J | T | 219.7/48.1 |
| L141 | 2040000490 | COL | EXC-ELDR25C | | |
| L142 | 2040000490 | COL | EXC-ELDR25C | | |
| L143 | 2040000490 | COL | EXC-ELDR25C | | |
| L180 | 6200003261 | S.COL | NLV32T-101J | T | 186.9/44.5 |
| L181 | 6200003261 | S.COL | NLV32T-101J | T | 181.2/40.1 |
| L201 | 6200003261 | S.COL | NLV32T-101J | T | 165/81.4 |
| L210 | 6200003261 | S.COL | NLV32T-101J | T | 156.1/85.2 |
| L250 | 6200003590 | S.COL | EXCCL3225U1 | T | 134.6/55.7 |
| L290 | 6200003590 | S.COL | EXCCL3225U1 | T | 152/28.2 |
| L330 | 6200001831 | S.COL | NLV32T-100J | B | 161.4/68.9 |
| L331 | 6200001831 | S.COL | NLV32T-100J | B | 164.8/68.9 |
| L340 | 6200003950 | S.COL | HF50ACC 322513-T | B | 201.7/96.1 |
| L341 | 6200003950 | S.COL | HF50ACC 322513-T | B | 195.5/96.1 |
| L360 | 6200003950 | S.COL | HF50ACC 322513-T | B | 149.7/96.1 |
| L361 | 6200003950 | S.COL | HF50ACC 322513-T | B | 143.5/96.1 |
| L380 | 6200003950 | S.COL | HF50ACC 322513-T | B | 28.5/41.9 |
| L381 | 6200003950 | S.COL | HF50ACC 322513-T | B | 28.5/48.1 |
| L400 | 6200003950 | S.COL | HF50ACC 322513-T | T | 238.3/10.9 |
| L401 | 6200003950 | S.COL | HF50ACC 322513-T | B | 234/11.2 |
| L402 | 6200003950 | S.COL | HF50ACC 322513-T | B | 237.3/11.2 |

M.=Mounted side (T: Mounted on the Top side, B: Mounted on the Bottom side)
S.=Surface mount

## [MAIN UNIT]

| REF NO. | ORDER NO. | DESCRIPTION | M. | H/V LOCATION |
|---|---|---|---|---|
| L405 | 6200003950 | S.COL HF50ACC 322513-T | T | 40.3/11.3 |
| L406 | 6200003950 | S.COL HF50ACC 322513-T | T | 34.3/11.3 |
| L407 | 6200003950 | S.COL HF50ACC 322513-T | T | 37.3/11.3 |
| L410 | 6200003590 | S.COL EXCCL3225U1 | T | 10.9/41 |
| L411 | 6200003950 | S.COL HF50ACC 322513-T | B | 10.9/39.6 |
| L412 | 6200003590 | S.COL EXCCL3225U1 | T | 10.9/38 |
| L413 | 6200003950 | S.COL HF50ACC 322513-T | B | 10.9/36.4 |
| L418 | 6200003950 | S.COL HF50ACC 322513-T | B | 11.1/97.2 |
| L435 | 6200003950 | S.COL HF50ACC 322513-T | B | 6.7/76.7 |
| L440 | 6200003950 | S.COL HF50ACC 322513-T | T | 164.1/12.7 |
| L441 | 6200003950 | S.COL HF50ACC 322513-T | T | 161.1/12.7 |
| L450 | 6200003590 | S.COL EXCCL3225U1 | B | 251.2/16.8 |
| L451 | 6170000150 | COL LW-16 | | |
| L452 | 6200003590 | S.COL EXCCL3225U1 | T | 250.2/25.4 |
| L453 | 6200003590 | S.COL EXCCL3225U1 | T | 250.2/28.4 |
| L454 | 6200009790 | S.COL BLM31PG121SN1 | B | 250.6/30.2 |
| L455 | 6200009790 | S.COL BLM31PG121SN1 | B | 250.6/32.5 |
| L456 | 6200003590 | S.COL EXCCL3225U1 | T | 250.4/39.6 |
| L480 | 6200003950 | S.COL HF50ACC 322513-T | B | 220.6/24 |
| L481 | 6200003950 | S.COL HF50ACC 322513-T | B | 149.8/17.1 |
| L482 | 6200003950 | S.COL HF50ACC 322513-T | B | 94.1/61.2 |
| L495 | 6200003191 | S.COL NLV32T-470J | B | 24.9/119.2 |
| L496 | 6200003191 | S.COL NLV32T-470J | B | 9.8/119 |
| L501 | 6200003261 | S.COL NLV32T-101J | T | 24.4/101.3 |
| L502 | 6200003261 | S.COL NLV32T-101J | T | 21.4/97.1 |
| L503 | 6200003261 | S.COL NLV32T-101J | T | 24.4/97.1 |
| L504 | 6200003520 | S.COL ELJFB 102K-F | T | 30.6/92.2 |
| L505 | 6150004090 | COL LS-469 (C-13969) | | |
| L507 | 6140003530 | COL LR-395 | | |
| L508 | 6140003210 | S.COL LR-358 | T | 75.9/90.8 |
| L509 | 6140003770 | S.COL LR-414 4KBL (STP-01435) | T | 85.2/90.8 |
| L510 | 6140003770 | S.COL LR-414 4KBL (STP-01435) | T | 101.6/90.8 |
| L511 | 6200003031 | S.COL NLV32T-R47J | B | 101.9/85.8 |
| L512 | 6150004280 | COL LS-484B (C-14927) | | |
| L513 | 6140002551 | S.COL #617DB-1919=P3 | T | 90.6/69.4 |
| L514 | 6140002551 | S.COL #617DB-1919=P3 | T | 78/69.4 |
| L515 | 6200003001 | S.COL NLV32T-R22J | T | 111.3/65.7 |
| L516 | 6200003021 | S.COL NLV32T-R33J | T | 102.8/71.4 |
| L517 | 6200001831 | S.COL NLV32T-100J | T | 99.4/73.5 |
| L518 | 6200010720 | S.COL C2520C-56NG-A | T | 71.2/69.1 |
| L519 | 6200010860 | S.COL C2520C-R10G-A (0.1U) | T | 67.6/70.3 |
| L521 | 6140003900 | COL LR-489 | | |
| L522 | 6140003890 | COL LR-488 | | |
| L523 | 6200010381 | S.COL ELJRE R15JFA | B | 90.6/76.8 |
| L524 | 6180002971 | S.COL NLV32T-068J | B | 102.6/63.5 |
| L525 | 6180002971 | S.COL NLV32T-068J | B | 100.7/67.3 |
| L526 | 6180002971 | S.COL NLV32T-068J | B | 97/67.2 |
| L527 | 6200010660 | S.COL C2520C-R15G-A (0.15U) | T | 64/71.6 |
| L528 | 6200003261 | S.COL NLV32T-101J | T | 33.6/96.3 |
| L529 | 6200010381 | S.COL ELJRE R15JFA | B | 93.2/78.1 |
| L601 | 6200003101 | S.COL NLV32T-3R9J | B | 38.2/53.1 |
| L602 | 6200003131 | S.COL NLV32T-120J | B | 34.7/49.6 |
| L603 | 6200003131 | S.COL NLV32T-120J | B | 38.9/43.2 |
| L604 | 6200003131 | S.COL NLV32T-120J | B | 34.7/37.4 |
| L605 | 6200003101 | S.COL NLV32T-3R9J | B | 38.2/33.8 |
| L606 | 6200002961 | S.COL NLV32T-4R7J | B | 49/53.1 |
| L607 | 6200001851 | S.COL NLV32T-5R6J | B | 45.5/49.6 |
| L608 | 6200001851 | S.COL NLV32T-5R6J | B | 49.7/43.5 |
| L609 | 6200001851 | S.COL NLV32T-5R6J | B | 45.5/37.4 |
| L610 | 6200002961 | S.COL NLV32T-4R7J | B | 49/33.8 |
| L611 | 6200002991 | S.COL NLV32T-2R2J | B | 59.8/53.1 |
| L612 | 6200003111 | S.COL NLV32T-6R8J | B | 56.3/49.6 |
| L613 | 6200003111 | S.COL NLV32T-6R8J | B | 60.5/43.5 |
| L614 | 6200003111 | S.COL NLV32T-6R8J | B | 56.3/37.4 |
| L615 | 6200002991 | S.COL NLV32T-2R2J | B | 59.8/33.8 |
| L616 | 6200002991 | S.COL NLV32T-2R2J | B | 70.7/53.1 |
| L617 | 6200003321 | S.COL NLV32T-3R3J | B | 67.1/49.6 |
| L618 | 6200003321 | S.COL NLV32T-3R3J | B | 71.3/43.5 |
| L619 | 6200003321 | S.COL NLV32T-3R3J | B | 67.1/37.4 |
| L620 | 6200002991 | S.COL NLV32T-2R2J | B | 70.6/33.8 |
| L621 | 6200003061 | S.COL NLV32T-1R2J | B | 81.5/53.1 |
| L622 | 6200003091 | S.COL NLV32T-2R7J | B | 78/49.6 |
| L623 | 6200003091 | S.COL NLV32T-2R7J | B | 82.2/43.5 |
| L624 | 6200003091 | S.COL NLV32T-2R7J | B | 78/37.4 |
| L625 | 6200003061 | S.COL NLV32T-1R2J | B | 81.5/33.8 |
| L626 | 6200003331 | S.COL NLV32T-1R0J | T | 37.8/50 |
| L627 | 6200003081 | S.COL NLV32T-1R8J | T | 40.8/50 |
| L628 | 6200003081 | S.COL NLV32T-1R8J | T | 40.2/43.5 |
| L629 | 6200003081 | S.COL NLV32T-1R8J | T | 40.8/36.9 |
| L630 | 6200003331 | S.COL NLV32T-1R0J | T | 37.8/36.9 |
| L631 | 6200003041 | S.COL NLV32T-R68J | T | 46.8/50 |
| L632 | 6200003071 | S.COL NLV32T-1R5J | T | 49.8/50 |
| L633 | 6200003071 | S.COL NLV32T-1R5J | T | 49.2/43.5 |
| L634 | 6200003071 | S.COL NLV32T-1R5J | T | 49.8/36.9 |
| L635 | 6200003041 | S.COL NLV32T-R68J | T | 46.8/36.9 |
| L636 | 6200002981 | S.COL NLV32T-R56J | T | 55.8/50 |
| L637 | 6200003051 | S.COL NLV32T-R82J | T | 58.9/50 |
| L638 | 6200003051 | S.COL NLV32T-R82J | T | 58.2/43.5 |
| L639 | 6200003051 | S.COL NLV32T-R82J | T | 58.8/36.9 |
| L640 | 6200002981 | S.COL NLV32T-R56J | T | 55.8/36.9 |
| L641 | 6200003021 | S.COL NLV32T-R33J | T | 64.8/50 |
| L642 | 6200003041 | S.COL NLV32T-R68J | T | 67.8/50 |
| L643 | 6200003041 | S.COL NLV32T-R68J | T | 67.2/43.5 |
| L644 | 6200003041 | S.COL NLV32T-R68J | T | 67.8/36.9 |
| L645 | 6200003021 | S.COL NLV32T-R33J | T | 64.8/36.9 |
| L646 | 6200005491 | S.COL NLV32T-331J | T | 79.8/50 |
| L647 | 6200007810 | S.COL LQH31HN95NK03L | T | 73.2/51.3 |
| L648 | 6200009810 | S.COL LQH31HNR61J03L | T | 76.8/50 |
| L649 | 6200009810 | S.COL LQH31HNR61J03L | T | 75.5/43.7 |
| L650 | 6200009810 | S.COL LQH31HNR61J03L | T | 76.8/36.9 |
| L651 | 6200007810 | S.COL LQH31HN95NK03L | T | 73.2/35.5 |
| L801 | 6200005491 | S.COL NLV32T-331J | T | 37.2/23.4 |
| L802 | 6200003261 | S.COL NLV32T-101J | B | 37.2/23.8 |
| L803 | 6140003970 | COL LR-494 | | |

## [MAIN UNIT]

| REF NO. | ORDER NO. | DESCRIPTION | M. | H/V LOCATION |
|---|---|---|---|---|
| L804 | 6200003241 | S.COL NLV32T-221J | B | 49.2/26 |
| L820 | 6200003161 | S.COL NLV32T-270J | T | 86.6/48.4 |
| L821 | 6200003191 | S.COL NLV32T-470J | T | 85.8/44.9 |
| L822 | 6200003201 | S.COL NLV32T-560J | T | 86.6/39.8 |
| R1 | 7030003550 | S.RES ERJ3GEYJ 822 V (8.2 k) | B | 214.8/107.3 |
| R2 | 7030003550 | S.RES ERJ3GEYJ 822 V (8.2 k) | B | 174.1/104.9 |
| R3 | 7030003520 | S.RES ERJ3GEYJ 472 V (4.7 k) | B | 161.1/103.9 |
| R4 | 7030003620 | S.RES ERJ3GEYJ 333 V (33 k) | B | 161.1/101.1 |
| R5 | 7030003580 | S.RES ERJ3GEYJ 153 V (15 k) | B | 161.9/99.1 |
| R6 | 7030003520 | S.RES ERJ3GEYJ 472 V (4.7 k) | B | 161.8/93.8 |
| R7 | 7030003520 | S.RES ERJ3GEYJ 472 V (4.7 k) | B | 172.2/104.2 |
| R8 | 7030003620 | S.RES ERJ3GEYJ 333 V (33 k) | B | 170.6/101.2 |
| R9 | 7030003580 | S.RES ERJ3GEYJ 153 V (15 k) | B | 172.8/100.4 |
| R10 | 7030003520 | S.RES ERJ3GEYJ 472 V (4.7 k) | B | 172.7/95.1 |
| R11 | 7030009891 | S.RES ERA3YED 151V (150) | B | 167.1/94.5 |
| R12 | 7030003560 | S.RES ERJ3GEYJ 103 V (10 k) | B | 167.1/96.3 |
| R13 | 7030003480 | S.RES ERJ3GEYJ 222 V (2.2 k) | B | 148.7/106.9 |
| R14 | 7030003560 | S.RES ERJ3GEYJ 103 V (10 k) | B | 146.9/106.9 |
| R15 | 7030003640 | S.RES ERJ3GEYJ 473 V (47 k) | B | 145.1/110.4 |
| R16 | 7030003680 | S.RES ERJ3GEYJ 104 V (100 k) | T | 224.8/77.8 |
| R17 | 7030003680 | S.RES ERJ3GEYJ 104 V (100 k) | T | 223.4/77.8 |
| R18 | 7030003400 | S.RES ERJ3GEYJ 471 V (470) | T | 222.1/77.8 |
| R19 | 7030003680 | S.RES ERJ3GEYJ 104 V (100 k) | T | 227.2/77.8 |
| R20 | 7030003680 | S.RES ERJ3GEYJ 104 V (100 k) | T | 228.6/77.8 |
| R21 | 7030003400 | S.RES ERJ3GEYJ 471 V (470) | T | 230/77.8 |
| R22 | 7030003560 | S.RES ERJ3GEYJ 103 V (10 k) | T | 180.8/69.6 |
| R23 | 7030003560 | S.RES ERJ3GEYJ 103 V (10 k) | T | 181.6/67.8 |
| R24 | 7030003660 | S.RES ERJ3GEYJ 683 V (68 k) | T | 182.3/69.7 |
| R25 | 7030003440 | S.RES ERJ3GEYJ 102 V (1 k) | T | 181.6/71.6 |
| R26 | 7030003560 | S.RES ERJ3GEYJ 103 V (10 k) | T | 193.3/69.7 |
| R27 | 7030003560 | S.RES ERJ3GEYJ 103 V (10 k) | T | 192.5/67.8 |
| R28 | 7030003660 | S.RES ERJ3GEYJ 683 V (68 k) | T | 191.8/69.7 |
| R29 | 7030003440 | S.RES ERJ3GEYJ 102 V (1 k) | T | 192.5/71.6 |
| R30 | 7030003320 | S.RES ERJ3GEYJ 101 V (100) | T | 192.5/66.5 |
| R31 | 7030003560 | S.RES ERJ3GEYJ 103 V (10 k) | T | 192.9/88 |
| R32 | 7030003560 | S.RES ERJ3GEYJ 103 V (10 k) | T | 192.9/86.7 |
| R33 | 7030003560 | S.RES ERJ3GEYJ 103 V (10 k) | B | 188.8/83.7 |
| R34 | 7030003440 | S.RES ERJ3GEYJ 102 V (1 k) | T | 222.3/96.5 |
| R35 | 7030003580 | S.RES ERJ3GEYJ 153 V (15 k) | T | 222.3/97.8 |
| R36 | 7030003580 | S.RES ERJ3GEYJ 153 V (15 k) | T | 225.1/99 |
| R37 | 7030003320 | S.RES ERJ3GEYJ 101 V (100) | T | 219.7/97.8 |
| R38 | 7030003390 | S.RES ERJ3GEYJ 391 V (390) | T | 225.1/100.3 |
| R39 | 7030003440 | S.RES ERJ3GEYJ 102 V (1 k) | T | 179.3/97.8 |
| R40 | 7030003580 | S.RES ERJ3GEYJ 153 V (15 k) | T | 179.3/99.1 |
| R41 | 7030003580 | S.RES ERJ3GEYJ 153 V (15 k) | T | 182.3/100.3 |
| R42 | 7030003320 | S.RES ERJ3GEYJ 101 V (100) | T | 176.5/99.1 |
| R43 | 7030003390 | S.RES ERJ3GEYJ 391 V (390) | T | 182.3/101.6 |
| R44 | 7030003320 | S.RES ERJ3GEYJ 101 V (100) | T | 181.6/66.5 |
| R45 | 7030003620 | S.RES ERJ3GEYJ 333 V (33 k) | T | 192.9/85.4 |
| R46 | 7030003620 | S.RES ERJ3GEYJ 333 V (33 k) | T | 192.9/89.3 |
| R47 | 7030003560 | S.RES ERJ3GEYJ 103 V (10 k) | B | 185.5/83.7 |
| R49 | 7540000270 | S.ASB ERZVF2M201 | B | 110.1/123.5 |
| R50 | 7310003820 | TRI EVN-D2AA03 B14 | | |
| R51 | 7030003560 | S.RES ERJ3GEYJ 103 V (10 k) | B | 152/123.2 |
| R52 | 7030003200 | S.RES ERJ3GEYJ 100 V (10) | B | 109.6/98.6 |
| R53 | 7030003390 | S.RES ERJ3GEYJ 391 V (390) | B | 118.6/102.4 |
| R54 | 7030003480 | S.RES ERJ3GEYJ 222 V (2.2 k) | T | 89.9/109.6 |
| R55 | 7030003480 | S.RES ERJ3GEYJ 222 V (2.2 k) | T | 91.3/109.6 |
| R56 | 7030003520 | S.RES ERJ3GEYJ 472 V (4.7 k) | T | 88.4/109.6 |
| R57 | 7030003620 | S.RES ERJ3GEYJ 333 V (33 k) | T | 86.1/109.9 |
| R58 | 7030003580 | S.RES ERJ3GEYJ 153 V (15 k) | T | 83.5/109.9 |
| R59 | 7030003520 | S.RES ERJ3GEYJ 472 V (4.7 k) | T | 85.4/107.6 |
| R60 | 7510001511 | S.TMR NTCG16 4LH 223JT | B | 125/86.8 |
| R61 | 7030003660 | S.RES ERJ3GEYJ 683 V (68 k) | B | 123.2/86.8 |
| R62 | 7030003480 | S.RES ERJ3GEYJ 222 V (2.2 k) | B | 121.4/86.8 |
| R63 | 7030003680 | S.RES ERJ3GEYJ 104 V (100 k) | B | 124/82.5 |
| R64 | 7030003560 | S.RES ERJ3GEYJ 103 V (10 k) | B | 124/84.3 |
| R65 | 7030003720 | S.RES ERJ3GEYJ 224 V (220 k) | B | 121.4/83.5 |
| R66 | 7030003320 | S.RES ERJ3GEYJ 101 V (100) | B | 121.4/80.2 |
| R67 | 7030005681 | S.RES ERA3YKD 473V (47 k) | B | 105.3/90.5 |
| R68 | 7030008121 | S.RES ERA3YED 682V (6.8 k) | B | 110/87.9 |
| R69 | 7310005530 | S.TRI TMC3ADCS2X (470) | T | 108.9/90 |
| R70 | 7030008121 | S.RES ERA3YED 682V (6.8 k) | B | 108.9/90.5 |
| R71 | 7030005681 | S.RES ERA3YKD 473V (47 k) | B | 107.1/90.5 |
| R72 | 7030003740 | S.RES ERJ3GEYJ 334 V (330 k) | B | 110.7/90.5 |
| R73 | 7030003520 | S.RES ERJ3GEYJ 472 V (4.7 k) | T | 109/78 |
| R74 | 7030003720 | S.RES ERJ3GEYJ 224 V (220 k) | B | 121.4/91.9 |
| R75 | 7030003600 | S.RES ERJ3GEYJ 223 V (22 k) | T | 108/86.3 |
| R76 | 7030003620 | S.RES ERJ3GEYJ 333 V (33 k) | T | 110.6/86.3 |
| R77 | 7030003720 | S.RES ERJ3GEYJ 224 V (220 k) | B | 110.7/85.6 |
| R78 | 7030003680 | S.RES ERJ3GEYJ 104 V (100 k) | T | 118/90.4 |
| R79 | 7310005590 | S.TRI TMC3ADCJ5X (220 k) | T | 114.5/90 |
| R80 | 7030003680 | S.RES ERJ3GEYJ 104 V (100 k) | T | 118.7/84.6 |
| R81 | 7310005590 | S.TRI TMC3ADCJ5X (220 k) | T | 114.5/85.1 |
| R82 | 7310005570 | S.TRI TMC3ADC15X (100 k) | T | 114.5/80.2 |
| R83 | 7030003680 | S.RES ERJ3GEYJ 104 V (100 k) | B | 116.6/79.2 |
| R84 | 7030003720 | S.RES ERJ3GEYJ 224 V (220 k) | B | 116.6/81 |
| R85 | 7030009920 | S.RES ERJ3GEYJ 335 V (3.3 M) | B | 113.3/81 |
| R86 | 7030003380 | S.RES ERJ3GEYJ 331 V (330) | B | 110.7/80.2 |
| R87 | 7030003320 | S.RES ERJ3GEYJ 101 V (100) | T | 116.1/77.8 |
| R88 | 7030003440 | S.RES ERJ3GEYJ 102 V (1 k) | T | 123/95.8 |
| R89 | 7030003440 | S.RES ERJ3GEYJ 102 V (1 k) | T | 125.6/93.2 |
| R90 | 7030003800 | S.RES ERJ3GEYJ 105 V (1 M) | B | 129.6/85.8 |
| R91 | 7030003660 | S.RES ERJ3GEYJ 683 V (68 k) | B | 129.6/88.6 |
| R92 | 7030003380 | S.RES ERJ3GEYJ 331 V (330) | B | 119.5/93.4 |
| R93 | 7310005580 | S.TRI TMC3ADCS3X (4.7 k) | T | 108.9/80.4 |
| R94 | 7030003320 | S.RES ERJ3GEYJ 101 V (100) | B | 136.8/95 |
| R95 | 7030003840 | S.RES ERJ3GEYJ 225 V (2.2 M) | B | 129.7/100.1 |
| R96 | 7030009920 | S.RES ERJ3GEYJ 335 V (3.3 M) | B | 126.4/103.7 |
| R97 | 7030011040 | S.RES ERJ3GEYJ 685 V (6.8 M) | B | 126.4/100.1 |
| R98 | 7030003320 | S.RES ERJ3GEYJ 101 V (100) | T | 122.8/90.8 |
| R99 | 7030000380 | S.RES MCR10EZHJ 1 k | B | 126.2/89.4 |

M.=Mounted side (T: Mounted on the Top side, B: Mounted on the Bottom side)
S.=Surface mount

## [MAIN UNIT]

| REF NO. | ORDER NO. | DESCRIPTION | M. | H/V LOCATION |
|---|---|---|---|---|
| R100 | 7030003440 | S.RES ERJ3GEYJ 102 V (1 k) | T | 216.4/79.1 |
| R101 | 7030003520 | S.RES ERJ3GEYJ 472 V (4.7 k) | T | 210.7/79.1 |
| R102 | 7030003680 | S.RES ERJ3GEYJ 104 V (100 k) | T | 212/79.1 |
| R103 | 7030003560 | S.RES ERJ3GEYJ 103 V (10 k) | T | 215.7/77 |
| R104 | 7030003560 | S.RES ERJ3GEYJ 103 V (10 k) | T | 214.3/70 |
| R105 | 7030003440 | S.RES ERJ3GEYJ 102 V (1 k) | T | 206.8/79.1 |
| R106 | 7030003520 | S.RES ERJ3GEYJ 472 V (4.7 k) | T | 201.1/79.1 |
| R107 | 7030003680 | S.RES ERJ3GEYJ 104 V (100 k) | T | 202.4/79.1 |
| R108 | 7030003560 | S.RES ERJ3GEYJ 103 V (10 k) | T | 206.1/77 |
| R109 | 7030003560 | S.RES ERJ3GEYJ 103 V (10 k) | T | 205.1/70 |
| R110 | 7030003560 | S.RES ERJ3GEYJ 103 V (10 k) | T | 216.5/91 |
| R111 | 7030003560 | S.RES ERJ3GEYJ 103 V (10 k) | T | 215.2/91 |
| R113 | 7030003440 | S.RES ERJ3GEYJ 102 V (1 k) | T | 215.6/70 |
| R114 | 7030003560 | S.RES ERJ3GEYJ 103 V (10 k) | T | 214.3/67.3 |
| R115 | 7030003440 | S.RES ERJ3GEYJ 102 V (1 k) | T | 203.8/70 |
| R116 | 7030003560 | S.RES ERJ3GEYJ 103 V (10 k) | T | 205.1/67.3 |
| R117 | 7030003620 | S.RES ERJ3GEYJ 333 V (33 k) | T | 124.7/75 |
| R118 | 7030003680 | S.RES ERJ3GEYJ 104 V (100 k) | T | 126/75 |
| R119 | 7030003560 | S.RES ERJ3GEYJ 103 V (10 k) | B | 217/60.1 |
| R120 | 7030003560 | S.RES ERJ3GEYJ 103 V (10 k) | B | 217/56.7 |
| R123 | 7030003520 | S.RES ERJ3GEYJ 472 V (4.7 k) | T | 214.5/46.3 |
| R124 | 7030003520 | S.RES ERJ3GEYJ 472 V (4.7 k) | T | 205.3/47.2 |
| R125 | 7030003320 | S.RES ERJ3GEYJ 101 V (100) | T | 213.6/48.8 |
| R126 | 7030003470 | S.RES ERJ3GEYJ 182 V (1.8 k) | T | 167.3/61.4 |
| R127 | 7030003470 | S.RES ERJ3GEYJ 182 V (1.8 k) | T | 167.3/62.8 |
| R128 | 7030003470 | S.RES ERJ3GEYJ 182 V (1.8 k) | T | 167.3/64.1 |
| R129 | 7030003470 | S.RES ERJ3GEYJ 182 V (1.8 k) | T | 167.3/65.4 |
| R130 | 7030003480 | S.RES ERJ3GEYJ 222 V (2.2 k) | B | 219.7/57.7 |
| R131 | 7030003480 | S.RES ERJ3GEYJ 222 V (2.2 k) | B | 219.6/59.2 |
| R132 | 7030000380 | S.RES MCR10EZHJ 1 k | B | 123.4/92.5 |
| R133 | 7030003520 | S.RES ERJ3GEYJ 472 V (4.7 k) | T | 230.6/61.6 |
| R134 | 7030003440 | S.RES ERJ3GEYJ 102 V (1 k) | T | 232.2/65.3 |
| R135 | 7030003520 | S.RES ERJ3GEYJ 472 V (4.7 k) | T | 232/53 |
| R136 | 7030003440 | S.RES ERJ3GEYJ 102 V (1 k) | T | 232/51.7 |
| R137 | 7030003480 | S.RES ERJ3GEYJ 222 V (2.2 k) | T | 232.2/64 |
| R138 | 7030003320 | S.RES ERJ3GEYJ 101 V (100) | B | 204.5/64.9 |
| R139 | 7030003560 | S.RES ERJ3GEYJ 103 V (10 k) | T | 226.2/71 |
| R140 | 7030003560 | S.RES ERJ3GEYJ 103 V (10 k) | T | 230.4/46.7 |
| R141 | 7030003560 | S.RES ERJ3GEYJ 103 V (10 k) | B | 256.3/59.4 |
| R142 | 7030003640 | S.RES ERJ3GEYJ 473 V (47 k) | B | 254.5/59.4 |
| R143 | 7030004040 | S.RES ERJ3GEYJ 4R7 V (4.7) | B | 252.4/98.6 |
| R144 | 7030004040 | S.RES ERJ3GEYJ 4R7 V (4.7) | B | 244.1/109.8 |
| R145 | 7030003440 | S.RES ERJ3GEYJ 102 V (1 k) | T | 234.8/76.9 |
| R146 | 7510001511 | S.TMR NTCG16 4LH 223JT | T | 232.2/76.9 |
| R147 | 7030003750 | S.RES ERJ3GEYJ 394 V (390 k) | T | 233.7/75.6 |
| R149 | 7030003360 | S.RES ERJ3GEYJ 221 V (220) | B | 252.2/92.4 |
| R150 | 7030003360 | S.RES ERJ3GEYJ 221 V (220) | B | 243.8/92.4 |
| R151 | 7030003410 | S.RES ERJ3GEYJ 561 V (560) | T | 243.8/33.1 |
| R152 | 7030003320 | S.RES ERJ3GEYJ 101 V (100) | B | 215.1/71.9 |
| R154 | 7030003320 | S.RES ERJ3GEYJ 101 V (100) | T | 206.3/37.3 |
| R155 | 7030003640 | S.RES ERJ3GEYJ 473 V (47 k) | T | 215.3/42.8 |
| R156 | 7030003640 | S.RES ERJ3GEYJ 473 V (47 k) | T | 204.5/39.8 |
| R157 | 7030003480 | S.RES ERJ3GEYJ 222 V (2.2 k) | T | 214.9/82.1 |
| R158 | 7030003480 | S.RES ERJ3GEYJ 222 V (2.2 k) | T | 206/82.6 |
| R159 | 7030003440 | S.RES ERJ3GEYJ 102 V (1 k) | T | 214.3/64.6 |
| R160 | 7030003440 | S.RES ERJ3GEYJ 102 V (1 k) | T | 226.7/92.1 |
| R161 | 7030003480 | S.RES ERJ3GEYJ 222 V (2.2 k) | T | 228/92.1 |
| R162 | 7030003680 | S.RES ERJ3GEYJ 104 V (100 k) | T | 226.7/89.3 |
| R163 | 7030003570 | S.RES ERJ3GEYJ 123 V (12 k) | T | 228/89.3 |
| R164 | 7030003680 | S.RES ERJ3GEYJ 104 V (100 k) | T | 229.3/89.3 |
| R165 | 7030003680 | S.RES ERJ3GEYJ 104 V (100 k) | T | 230.6/89.3 |
| R166 | 7030003400 | S.RES ERJ3GEYJ 471 V (470) | T | 231.9/89.3 |
| R167 | 7030003440 | S.RES ERJ3GEYJ 102 V (1 k) | T | 225.4/92.1 |
| R168 | 7030003480 | S.RES ERJ3GEYJ 222 V (2.2 k) | T | 224.1/92.1 |
| R169 | 7030003680 | S.RES ERJ3GEYJ 104 V (100 k) | T | 225.4/89.3 |
| R170 | 7030003570 | S.RES ERJ3GEYJ 123 V (12 k) | T | 224.1/89.3 |
| R171 | 7030003680 | S.RES ERJ3GEYJ 104 V (100 k) | T | 222.8/89.3 |
| R172 | 7030003680 | S.RES ERJ3GEYJ 104 V (100 k) | T | 221.5/89.3 |
| R173 | 7030003400 | S.RES ERJ3GEYJ 471 V (470) | T | 220.2/89.3 |
| R174 | 7030003440 | S.RES ERJ3GEYJ 102 V (1 k) | T | 205.1/64.5 |
| R175 | 7030003860 | S.RES ERJ3GE JPW V | B | 192.6/39.4 |
| R176 | 7030003450 | S.RES ERJ3GEYJ 122 V (1.2 k) | T | 107.8/82.8 |
| R180 | 7030003560 | S.RES ERJ3GEYJ 103 V (10 k) | B | 190.2/57 |
| R181 | 7030003560 | S.RES ERJ3GEYJ 103 V (10 k) | B | 191.8/57 |
| R183 | 7030003470 | S.RES ERJ3GEYJ 182 V (1.8 k) | T | 167.3/60.1 |
| R184 | 7030003470 | S.RES ERJ3GEYJ 182 V (1.8 k) | T | 167.3/58.8 |
| R185 | 7030003470 | S.RES ERJ3GEYJ 182 V (1.8 k) | T | 167.3/57.5 |
| R186 | 7030003470 | S.RES ERJ3GEYJ 182 V (1.8 k) | T | 167.3/56.2 |
| R187 | 7030003480 | S.RES ERJ3GEYJ 222 V (2.2 k) | T | 180.9/57.8 |
| R188 | 7030003480 | S.RES ERJ3GEYJ 222 V (2.2 k) | T | 180.9/56.5 |
| R189 | 7030003560 | S.RES ERJ3GEYJ 103 V (10 k) | B | 188.9/43.4 |
| R190 | 7030003560 | S.RES ERJ3GEYJ 103 V (10 k) | B | 188.9/40.6 |
| R191 | 7030003440 | S.RES ERJ3GEYJ 102 V (1 k) | T | 194.1/35.6 |
| R192 | 7030003610 | S.RES ERJ3GEYJ 273 V (27 k) | T | 192/34.9 |
| R193 | 7030003440 | S.RES ERJ3GEYJ 102 V (1 k) | T | 178.3/41.3 |
| R194 | 7030003610 | S.RES ERJ3GEYJ 273 V (27 k) | T | 181.7/35.4 |
| R195 | 7030003440 | S.RES ERJ3GEYJ 102 V (1 k) | T | 191.3/44.8 |
| R196 | 7030003440 | S.RES ERJ3GEYJ 102 V (1 k) | T | 183.4/48 |
| R197 | 7030003320 | S.RES ERJ3GEYJ 101 V (100) | T | 125.6/94.5 |
| R198 | 7030003640 | S.RES ERJ3GEYJ 473 V (47 k) | T | 120.2/90.8 |
| R199 | 7030003520 | S.RES ERJ3GEYJ 472 V (4.7 k) | T | 121.7/89 |
| R200 | 7030003560 | S.RES ERJ3GEYJ 103 V (10 k) | B | 166.9/76.4 |
| R201 | 7030003560 | S.RES ERJ3GEYJ 103 V (10 k) | T | 161.2/71.4 |
| R202 | 7030003520 | S.RES ERJ3GEYJ 472 V (4.7 k) | T | 167.5/72.8 |
| R203 | 7030003720 | S.RES ERJ3GEYJ 224 V (220 k) | T | 166.2/73.5 |
| R204 | 7030003320 | S.RES ERJ3GEYJ 101 V (100) | T | 142.2/67.8 |
| R205 | 7030003320 | S.RES ERJ3GEYJ 101 V (100) | B | 148.2/70 |
| R208 | 7030003440 | S.RES ERJ3GEYJ 102 V (1 k) | T | 147.2/75.8 |
| R211 | 7030003560 | S.RES ERJ3GEYJ 103 V (10 k) | T | 162.7/93.7 |
| R212 | 7030003520 | S.RES ERJ3GEYJ 472 V (4.7 k) | T | 165.1/91.5 |
| R213 | 7030003440 | S.RES ERJ3GEYJ 102 V (1 k) | T | 165.1/94.1 |
| R214 | 7030003600 | S.RES ERJ3GEYJ 223 V (22 k) | B | 152.9/84.5 |
| R216 | 7030003620 | S.RES ERJ3GEYJ 333 V (33 k) | B | 152.9/82.7 |
| R218 | 7030003580 | S.RES ERJ3GEYJ 153 V (15 k) | T | 138.3/85.3 |

## [MAIN UNIT]

| REF NO. | ORDER NO. | DESCRIPTION | M. | H/V LOCATION |
|---|---|---|---|---|
| R221 | 7030003560 | S.RES ERJ3GEYJ 103 V (10 k) | T | 158.5/93.7 |
| R222 | 7030003520 | S.RES ERJ3GEYJ 472 V (4.7 k) | T | 155.9/91.5 |
| R223 | 7030003440 | S.RES ERJ3GEYJ 102 V (1 k) | T | 155.9/94.1 |
| R224 | 7030003600 | S.RES ERJ3GEYJ 223 V (22 k) | B | 152.9/89.3 |
| R226 | 7030003620 | S.RES ERJ3GEYJ 333 V (33 k) | B | 152.9/87.5 |
| R228 | 7030003580 | S.RES ERJ3GEYJ 153 V (15 k) | T | 138.3/90.2 |
| R230 | 7030003320 | S.RES ERJ3GEYJ 101 V (100) | T | 66.5/5.7 |
| R231 | 7030003320 | S.RES ERJ3GEYJ 101 V (100) | T | 73.9/23.8 |
| R232 | 7030003680 | S.RES ERJ3GEYJ 104 V (100 k) | T | 74.3/20.3 |
| R233 | 7030003560 | S.RES ERJ3GEYJ 103 V (10 k) | T | 76.4/22 |
| R234 | 7030003320 | S.RES ERJ3GEYJ 101 V (100) | T | 73.3/17.2 |
| R235 | 7030003860 | S.RES ERJ3GE JPW V | T | 155.9/58.5 |
| R240 | 7030003420 | S.RES ERJ3GEYJ 681 V (680) | T | 177.1/58.1 |
| R241 | 7030003360 | S.RES ERJ3GEYJ 221 V (220) | T | 233.5/35.2 |
| R242 | 7030003440 | S.RES ERJ3GEYJ 102 V (1 k) | T | 233.4/32.7 |
| R243 | 7030003440 | S.RES ERJ3GEYJ 102 V (1 k) | T | 213.8/40.1 |
| R244 | 7030003440 | S.RES ERJ3GEYJ 102 V (1 k) | T | 217.1/43.5 |
| R245 | 7030003540 | S.RES ERJ3GEYJ 682 V (6.8 k) | T | 215.3/44.3 |
| R246 | 7030003440 | S.RES ERJ3GEYJ 102 V (1 k) | T | 205.3/41.8 |
| R247 | 7030003440 | S.RES ERJ3GEYJ 102 V (1 k) | T | 204/44.6 |
| R248 | 7030003540 | S.RES ERJ3GEYJ 682 V (6.8 k) | T | 205.3/44.6 |
| R249 | 7030003560 | S.RES ERJ3GEYJ 103 V (10 k) | T | 163.3/70.9 |
| R250 | 7030003200 | S.RES ERJ3GEYJ 100 V (10) | B | 117.1/28.7 |
| R251 | 7030003200 | S.RES ERJ3GEYJ 100 V (10) | B | 117.8/30.1 |
| R252 | 7030003200 | S.RES ERJ3GEYJ 100 V (10) | B | 117.1/31.5 |
| R253 | 7030003200 | S.RES ERJ3GEYJ 100 V (10) | B | 117.8/32.9 |
| R254 | 7030003200 | S.RES ERJ3GEYJ 100 V (10) | B | 117.1/34.3 |
| R255 | 7030003200 | S.RES ERJ3GEYJ 100 V (10) | B | 117.8/35.7 |
| R256 | 7030003200 | S.RES ERJ3GEYJ 100 V (10) | B | 117.1/37.1 |
| R257 | 7030003200 | S.RES ERJ3GEYJ 100 V (10) | B | 117.8/38.5 |
| R258 | 7030003560 | S.RES ERJ3GEYJ 103 V (10 k) | B | 120.4/28.7 |
| R259 | 7030003560 | S.RES ERJ3GEYJ 103 V (10 k) | B | 121.2/30.1 |
| R260 | 7030003560 | S.RES ERJ3GEYJ 103 V (10 k) | B | 120.4/31.5 |
| R261 | 7030003560 | S.RES ERJ3GEYJ 103 V (10 k) | B | 121.2/32.9 |
| R262 | 7030003560 | S.RES ERJ3GEYJ 103 V (10 k) | B | 120.4/34.3 |
| R263 | 7030003560 | S.RES ERJ3GEYJ 103 V (10 k) | B | 121.2/35.7 |
| R264 | 7030003560 | S.RES ERJ3GEYJ 103 V (10 k) | B | 120.4/37.1 |
| R265 | 7030003560 | S.RES ERJ3GEYJ 103 V (10 k) | B | 121.2/38.5 |
| R270 | 7030003200 | S.RES ERJ3GEYJ 100 V (10) | B | 120.6/42.8 |
| R271 | 7030003200 | S.RES ERJ3GEYJ 100 V (10) | B | 121.3/44.2 |
| R272 | 7030003200 | S.RES ERJ3GEYJ 100 V (10) | B | 120.6/45.6 |
| R273 | 7030003200 | S.RES ERJ3GEYJ 100 V (10) | B | 121.3/47 |
| R274 | 7030003200 | S.RES ERJ3GEYJ 100 V (10) | B | 120.6/48.4 |
| R275 | 7030003200 | S.RES ERJ3GEYJ 100 V (10) | B | 121.3/49.8 |
| R276 | 7030003200 | S.RES ERJ3GEYJ 100 V (10) | B | 120.6/51.2 |
| R277 | 7030003200 | S.RES ERJ3GEYJ 100 V (10) | B | 124.2/54.7 |
| R278 | 7030003560 | S.RES ERJ3GEYJ 103 V (10 k) | B | 124.3/42.8 |
| R279 | 7030003560 | S.RES ERJ3GEYJ 103 V (10 k) | B | 125/44.2 |
| R280 | 7030003560 | S.RES ERJ3GEYJ 103 V (10 k) | B | 124.3/45.6 |
| R281 | 7030003560 | S.RES ERJ3GEYJ 103 V (10 k) | B | 125/47 |
| R282 | 7030003560 | S.RES ERJ3GEYJ 103 V (10 k) | B | 124.3/48.4 |
| R283 | 7030003560 | S.RES ERJ3GEYJ 103 V (10 k) | B | 125/49.8 |
| R284 | 7030003560 | S.RES ERJ3GEYJ 103 V (10 k) | B | 124.3/51.2 |
| R285 | 7030003560 | S.RES ERJ3GEYJ 103 V (10 k) | B | 125/52.6 |
| R290 | 7030003200 | S.RES ERJ3GEYJ 100 V (10) | B | 164.1/41.5 |
| R291 | 7030003200 | S.RES ERJ3GEYJ 100 V (10) | B | 164.1/39.7 |
| R292 | 7030003200 | S.RES ERJ3GEYJ 100 V (10) | B | 164.1/37.9 |
| R293 | 7030003200 | S.RES ERJ3GEYJ 100 V (10) | B | 164.1/36.1 |
| R294 | 7030003200 | S.RES ERJ3GEYJ 100 V (10) | B | 164.1/34.3 |
| R295 | 7030003200 | S.RES ERJ3GEYJ 100 V (10) | B | 164.1/32.5 |
| R296 | 7030003200 | S.RES ERJ3GEYJ 100 V (10) | B | 164.1/30.7 |
| R298 | 7030003560 | S.RES ERJ3GEYJ 103 V (10 k) | B | 160.8/41.5 |
| R299 | 7030003560 | S.RES ERJ3GEYJ 103 V (10 k) | B | 160.8/39.7 |
| R300 | 7030003560 | S.RES ERJ3GEYJ 103 V (10 k) | B | 160.8/37.9 |
| R301 | 7030003560 | S.RES ERJ3GEYJ 103 V (10 k) | B | 160.8/36.1 |
| R302 | 7030003560 | S.RES ERJ3GEYJ 103 V (10 k) | B | 160.8/34.3 |
| R303 | 7030003560 | S.RES ERJ3GEYJ 103 V (10 k) | B | 160.8/32.5 |
| R304 | 7030003560 | S.RES ERJ3GEYJ 103 V (10 k) | B | 160.8/30.7 |
| R310 | 7030003200 | S.RES ERJ3GEYJ 100 V (10) | B | 166.1/55.9 |
| R311 | 7030003200 | S.RES ERJ3GEYJ 100 V (10) | B | 163.5/54.1 |
| R312 | 7030003200 | S.RES ERJ3GEYJ 100 V (10) | B | 164.1/52.3 |
| R313 | 7030003200 | S.RES ERJ3GEYJ 100 V (10) | B | 164.1/50.5 |
| R314 | 7030003200 | S.RES ERJ3GEYJ 100 V (10) | B | 164.1/48.7 |
| R315 | 7030003200 | S.RES ERJ3GEYJ 100 V (10) | B | 164.1/46.9 |
| R316 | 7030003200 | S.RES ERJ3GEYJ 100 V (10) | B | 164.1/45.1 |
| R317 | 7030003200 | S.RES ERJ3GEYJ 100 V (10) | B | 164.1/43.3 |
| R318 | 7030003560 | S.RES ERJ3GEYJ 103 V (10 k) | B | 162.1/55.9 |
| R319 | 7030003560 | S.RES ERJ3GEYJ 103 V (10 k) | B | 160.2/54.1 |
| R320 | 7030003560 | S.RES ERJ3GEYJ 103 V (10 k) | B | 160.8/52.3 |
| R321 | 7030003560 | S.RES ERJ3GEYJ 103 V (10 k) | B | 160.8/50.5 |
| R322 | 7030003560 | S.RES ERJ3GEYJ 103 V (10 k) | B | 160.8/48.7 |
| R323 | 7030003560 | S.RES ERJ3GEYJ 103 V (10 k) | B | 160.8/46.9 |
| R324 | 7030003560 | S.RES ERJ3GEYJ 103 V (10 k) | B | 160.8/45.1 |
| R325 | 7030003560 | S.RES ERJ3GEYJ 103 V (10 k) | B | 160.8/43.3 |
| R330 | 7030009891 | S.RES ERA3YED 151V (150) | T | 155/65.5 |
| R331 | 7030009851 | S.RES ERA3YED 271V (270) | T | 152.4/65.5 |
| R341 | 7030003520 | S.RES ERJ3GEYJ 472 V (4.7 k) | B | 199.8/27.5 |
| R342 | 7030004050 | S.RES ERJ3GEYJ 1R0 V (1) | T | 214.6/28.5 |
| R351 | 7030003680 | S.RES ERJ3GEYJ 104 V (100 k) | T | 129.6/81.6 |
| R352 | 7030003640 | S.RES ERJ3GEYJ 473 V (47 k) | T | 132.5/83.2 |
| R353 | 7030003560 | S.RES ERJ3GEYJ 103 V (10 k) | T | 134.7/83.7 |
| R361 | 7030003520 | S.RES ERJ3GEYJ 472 V (4.7 k) | B | 144.7/26.2 |
| R362 | 7030004050 | S.RES ERJ3GEYJ 1R0 V (1) | T | 157.7/16.5 |
| R381 | 7030004050 | S.RES ERJ3GEYJ 1R0 V (1) | T | 93.7/50.7 |
| R397 | 7030003410 | S.RES ERJ3GEYJ 561 V (560) | B | 108.3/36.7 |
| R398 | 7030007860 | S.RES ERJ3GEYJ 8R2V (8.2) | B | 110.2/38.7 |
| R399 | 7030003410 | S.RES ERJ3GEYJ 561 V (560) | B | 108.3/39.6 |
| R400 | 7030003360 | S.RES ERJ3GEYJ 221 V (220) | T | 228.3/9.9 |
| R401 | 7030003360 | S.RES ERJ3GEYJ 221 V (220) | B | 227.3/9.9 |
| R402 | 7030003360 | S.RES ERJ3GEYJ 221 V (220) | T | 226.3/9.9 |
| R403 | 7030003360 | S.RES ERJ3GEYJ 221 V (220) | T | 28.3/9.9 |
| R404 | 7030003360 | S.RES ERJ3GEYJ 221 V (220) | T | 27/9.9 |
| R405 | 7030003360 | S.RES ERJ3GEYJ 221 V (220) | T | 25.7/9.9 |
| R410 | 7030003320 | S.RES ERJ3GEYJ 101 V (100) | T | 9.9/56 |

M.=Mounted side (T: Mounted on the Top side, B: Mounted on the Bottom side)
S.=Surface mount

## [MAIN UNIT]

| REF NO. | ORDER NO. | DESCRIPTION | M. | H/V LOCATION |
|---|---|---|---|---|
| R413 | 7030003320 | S.RES ERJ3GEYJ 101 V (100) | B | 9.9/53 |
| R414 | 7030003320 | S.RES ERJ3GEYJ 101 V (100) | T | 9.9/52 |
| R415 | 7030003320 | S.RES ERJ3GEYJ 101 V (100) | B | 9.9/51 |
| R416 | 7030003320 | S.RES ERJ3GEYJ 101 V (100) | T | 9.9/50 |
| R417 | 7030003320 | S.RES ERJ3GEYJ 101 V (100) | B | 9.9/47 |
| R418 | 7030003320 | S.RES ERJ3GEYJ 101 V (100) | T | 9.9/46 |
| R419 | 7030003320 | S.RES ERJ3GEYJ 101 V (100) | B | 9.9/45 |
| R420 | 7030003320 | S.RES ERJ3GEYJ 101 V (100) | T | 9.9/44 |
| R421 | 7030003320 | S.RES ERJ3GEYJ 101 V (100) | B | 9.9/43 |
| R422 | 7030003320 | S.RES ERJ3GEYJ 101 V (100) | T | 9.9/32 |
| R423 | 7030003320 | S.RES ERJ3GEYJ 101 V (100) | T | 9.9/30 |
| R424 | 7030003320 | S.RES ERJ3GEYJ 101 V (100) | B | 9.9/29 |
| R450 | 7030003600 | S.RES ERJ3GEYJ 223 V (22 k) | B | 205.8/28 |
| R451 | 7030003600 | S.RES ERJ3GEYJ 223 V (22 k) | B | 166.9/18.4 |
| R452 | 7030003600 | S.RES ERJ3GEYJ 223 V (22 k) | B | 94.3/43.7 |
| R460 | 7030003560 | S.RES ERJ3GEYJ 103 V (10 k) | B | 144.4/79.4 |
| R461 | 7030003560 | S.RES ERJ3GEYJ 103 V (10 k) | B | 144.1/73.6 |
| R462 | 7030003580 | S.RES ERJ3GEYJ 153 V (15 k) | T | 79.1/23.3 |
| R463 | 7030003560 | S.RES ERJ3GEYJ 103 V (10 k) | T | 158.6/71.4 |
| R466 | 7030003440 | S.RES ERJ3GEYJ 102 V (1 k) | T | 73.7/22.2 |
| R467 | 7030003320 | S.RES ERJ3GEYJ 101 V (100) | B | 148.2/73.6 |
| R468 | 7030003620 | S.RES ERJ3GEYJ 333 V (33 k) | T | 142.2/77.4 |
| R469 | 7030003520 | S.RES ERJ3GEYJ 472 V (4.7 k) | T | 143/75.7 |
| R470 | 7030003620 | S.RES ERJ3GEYJ 333 V (33 k) | T | 165.9/78.4 |
| R471 | 7030003440 | S.RES ERJ3GEYJ 102 V (1 k) | T | 152.2/67.8 |
| R472 | 7030003640 | S.RES ERJ3GEYJ 473 V (47 k) | T | 165.9/77.1 |
| R474 | 7030003600 | S.RES ERJ3GEYJ 223 V (22 k) | T | 132.5/75.3 |
| R476 | 7030003760 | S.RES ERJ3GEYJ 474 V (470 k) | T | 126.5/77.5 |
| R479 | 7030003550 | S.RES ERJ3GEYJ 822 V (8.2 k) | B | 170.5/73.6 |
| R481 | 7030003860 | S.RES ERJ3GE JPW V | B | 170.5/70.8 |
| R482 | 7030000010 | S.RES MCR10EZHJ JPW (000) | B | 108.8/46 |
| R483 | 7030000010 | S.RES MCR10EZHJ JPW (000) | B | 206.6/18.3 |
| R484 | 7030000010 | S.RES MCR10EZHJ JPW (000) | B | 151.6/27.6 |
| R485 | 7030003860 | S.RES ERJ3GE JPW V | T | 9.9/48 |
| R486 | 7030003860 | S.RES ERJ3GE JPW V | B | 9.9/49 |
| R487 | 7030000010 | S.RES MCR10EZHJ JPW (000) | T | 9.9/58.1 |
| R488 | 7030003860 | S.RES ERJ3GE JPW V | B | 111.4/76.2 |
| R489 | 7030003500 | S.RES ERJ3GEYJ 332 V (3.3 k) | B | 229/6 |
| R490 | 7030003440 | S.RES ERJ3GEYJ 102 V (1 k) | B | 159.4/63.3 |
| R491 | 7030003560 | S.RES ERJ3GEYJ 103 V (10 k) | B | 157.7/59.6 |
| R492 | 7030003560 | S.RES ERJ3GEYJ 103 V (10 k) | B | 159.5/59.6 |
| R493 | 7030003410 | S.RES ERJ3GEYJ 561 V (560) | T | 130.7/103 |
| R494 | 7030005331 | S.RES ERA3YED 562V (5.6 k) | T | 218.4/78.6 |
| R495 | 7030010480 | S.RES ERJ1TYJ 181U (180) | T | 212.4/2.3 |
| R496 | 7030005331 | S.RES ERA3YED 562V (5.6 k) | T | 218.4/77.3 |
| R497 | 7030007911 | S.RES ERA3YKD 563V (56 k) | B | 228.6/16.1 |
| R498 | 7030005631 | S.RES ERA3YKD 154V (150 k) | B | 228.6/20.2 |
| R499 | 7030005631 | S.RES ERA3YKD 154V (150 k) | B | 230.4/20.2 |
| R501 | 7030003440 | S.RES ERJ3GEYJ 102 V (1 k) | T | 20.7/58.3 |
| R502 | 7030003560 | S.RES ERJ3GEYJ 103 V (10 k) | T | 19.2/60.9 |
| R503 | 7030003440 | S.RES ERJ3GEYJ 102 V (1 k) | T | 22.2/58.3 |
| R504 | 7030003440 | S.RES ERJ3GEYJ 102 V (1 k) | T | 23.7/60.9 |
| R505 | 7030003320 | S.RES ERJ3GEYJ 101 V (100) | T | 26/61.7 |
| R506 | 7030003320 | S.RES ERJ3GEYJ 101 V (100) | T | 16.1/70.6 |
| R507 | 7030003440 | S.RES ERJ3GEYJ 102 V (1 k) | T | 22.2/72.4 |
| R508 | 7030003440 | S.RES ERJ3GEYJ 102 V (1 k) | T | 23.7/72.4 |
| R509 | 7030003320 | S.RES ERJ3GEYJ 101 V (100) | T | 26.7/72.4 |
| R510 | 7030003320 | S.RES ERJ3GEYJ 101 V (100) | T | 19.2/81.2 |
| R511 | 7030003320 | S.RES ERJ3GEYJ 101 V (100) | T | 21.4/87.5 |
| R512 | 7030003650 | S.RES ERJ3GEYJ 563 V (56 k) | B | 228.2/3.1 |
| R513 | 7030003860 | S.RES ERJ3GE JPW V | T | 103.9/68.7 |
| R514 | 7030003440 | S.RES ERJ3GEYJ 102 V (1 k) | T | 19.2/96.4 |
| R515 | 7030003410 | S.RES ERJ3GEYJ 561 V (560) | T | 26.6/96.4 |
| R516 | 7030003440 | S.RES ERJ3GEYJ 102 V (1 k) | T | 25.3/84.6 |
| R517 | 7030003520 | S.RES ERJ3GEYJ 472 V (4.7 k) | T | 23.2/84.6 |
| R518 | 7030003400 | S.RES ERJ3GEYJ 471 V (470) | B | 20.1/91.9 |
| R519 | 7030003560 | S.RES ERJ3GEYJ 103 V (10 k) | B | 20.1/89 |
| R520 | 7030003630 | S.RES ERJ3GEYJ 393 V (39 k) | B | 24.3/91.9 |
| R521 | 7030003600 | S.RES ERJ3GEYJ 223 V (22 k) | B | 24.3/87.7 |
| R522 | 7030003200 | S.RES ERJ3GEYJ 100 V (10) | B | 230.4/24.8 |
| R523 | 7030003360 | S.RES ERJ3GEYJ 221 V (220) | B | 27.9/87.7 |
| R524 | 7030003560 | S.RES ERJ3GEYJ 103 V (10 k) | B | 27.1/93.9 |
| R525 | 7030003480 | S.RES ERJ3GEYJ 222 V (2.2 k) | B | 31.3/91.9 |
| R526 | 7030003440 | S.RES ERJ3GEYJ 102 V (1 k) | B | 31.3/98.2 |
| R527 | 7030003560 | S.RES ERJ3GEYJ 103 V (10 k) | B | 31.3/94.9 |
| R528 | 7030003560 | S.RES ERJ3GEYJ 103 V (10 k) | B | 34.3/96.2 |
| R529 | 7030003560 | S.RES ERJ3GEYJ 103 V (10 k) | B | 34.3/89.7 |
| R530 | 7030003560 | S.RES ERJ3GEYJ 103 V (10 k) | B | 48.1/95.1 |
| R531 | 7030003560 | S.RES ERJ3GEYJ 103 V (10 k) | B | 48.1/82 |
| R532 | 7030003440 | S.RES ERJ3GEYJ 102 V (1 k) | B | 40.9/91.4 |
| R533 | 7030003560 | S.RES ERJ3GEYJ 103 V (10 k) | B | 44.5/91.4 |
| R534 | 7030003560 | S.RES ERJ3GEYJ 103 V (10 k) | T | 49.1/79.5 |
| R535 | 7030003440 | S.RES ERJ3GEYJ 102 V (1 k) | B | 49.9/82 |
| R536 | 7030003490 | S.RES ERJ3GEYJ 272 V (2.7 k) | B | 48.7/85.7 |
| R537 | 7030003320 | S.RES ERJ3GEYJ 101 V (100) | T | 53.5/84.4 |
| R538 | 7310005550 | S.TRI TMC3ADCJ4X (22 k) | T | 49.3/90.7 |
| R539 | 7030003400 | S.RES ERJ3GEYJ 471 V (470) | B | 51.7/95.1 |
| R540 | 7030003220 | S.RES ERJ3GEYJ 150 V (15) | B | 66.4/96.1 |
| R541 | 7030003380 | S.RES ERJ3GEYJ 331 V (330) | B | 64.3/96.9 |
| R543 | 7030003380 | S.RES ERJ3GEYJ 331 V (330) | B | 64.3/95.3 |
| R544 | 7030005671 | S.RES ERA3YKD 393V (39 k) | B | 229.4/17.7 |
| R545 | 7030004030 | S.RES ERJ3GEYJ 5R6 V (5.6) | B | 59.9/93.8 |
| R546 | 7030003430 | S.RES ERJ3GEYJ 821 V (820) | B | 58.7/90.7 |
| R547 | 7030003430 | S.RES ERJ3GEYJ 821 V (820) | B | 61.1/90.7 |
| R548 | 7030004030 | S.RES ERJ3GEYJ 5R6 V (5.6) | B | 80.6/93.8 |
| R549 | 7030003560 | S.RES ERJ3GEYJ 103 V (10 k) | T | 129.5/104.6 |
| R550 | 7030003560 | S.RES ERJ3GEYJ 103 V (10 k) | T | 132.8/106.5 |
| R551 | 7030003680 | S.RES ERJ3GEYJ 104 V (100 k) | T | 188.5/106.1 |
| R552 | 7030004040 | S.RES ERJ3GEYJ 4R7 V (4.7) | B | 101.6/88.7 |
| R553 | 7030009891 | S.RES ERA3YED 151V (150) | B | 108.3/85.2 |
| R554 | 7030003440 | S.RES ERJ3GEYJ 102 V (1 k) | B | 105.6/85.2 |
| R555 | 7510001491 | S.TMR NTCG16 3NH 681JT | B | 103.8/78 |
| R556 | 7030003480 | S.RES ERJ3GEYJ 222 V (2.2 k) | B | 103.8/80.6 |
| R557 | 7030005331 | S.RES ERA3YED 562V (5.6 k) | B | 229.4/23 |

## [MAIN UNIT]

| REF NO. | ORDER NO. | DESCRIPTION | M. | H/V LOCATION |
|---|---|---|---|---|
| R558 | 7030003320 | S.RES ERJ3GEYJ 101 V (100) | B | 102.9/74.8 |
| R559 | 7030003680 | S.RES ERJ3GEYJ 104 V (100 k) | T | 132.8/105.2 |
| R560 | 7030003680 | S.RES ERJ3GEYJ 104 V (100 k) | T | 188.5/103.4 |
| R561 | 7030003680 | S.RES ERJ3GEYJ 104 V (100 k) | T | 133.6/102.4 |
| R562 | 7030003320 | S.RES ERJ3GEYJ 101 V (100) | B | 77.5/69.5 |
| R563 | 7030003300 | S.RES ERJ3GEYJ 680 V (68) | T | 110/62.7 |
| R564 | 7030003620 | S.RES ERJ3GEYJ 333 V (33 k) | T | 107.1/64.2 |
| R565 | 7030003640 | S.RES ERJ3GEYJ 473 V (47 k) | B | 234.6/4.6 |
| R566 | 7030003330 | S.RES ERJ3GEYJ 121 V (120) | T | 102.8/74.1 |
| R567 | 7030003230 | S.RES ERJ3GEYJ 180 V (18) | B | 91.4/67.6 |
| R568 | 7030009851 | S.RES ERA3YED 271V (270) | B | 93.4/66.8 |
| R569 | 7030009851 | S.RES ERA3YED 271V (270) | B | 89.3/66.8 |
| R570 | 7030003520 | S.RES ERJ3GEYJ 472 V (4.7 k) | T | 59.8/60.7 |
| R571 | 7030003560 | S.RES ERJ3GEYJ 103 V (10 k) | B | 64.5/59.2 |
| R572 | 7030004040 | S.RES ERJ3GEYJ 4R7 V (4.7) | T | 61.5/68.2 |
| R573 | 7030003400 | S.RES ERJ3GEYJ 471 V (470) | B | 68.2/59.2 |
| R574 | 7030003280 | S.RES ERJ3GEYJ 470 V (47) | T | 69.8/63.8 |
| R575 | 7030009851 | S.RES ERA3YED 271V (270) | B | 56.7/59.3 |
| R576 | 7030003230 | S.RES ERJ3GEYJ 180 V (18) | B | 54.6/58.5 |
| R577 | 7030009851 | S.RES ERA3YED 271V (270) | B | 56.7/57.7 |
| R578 | 7030003230 | S.RES ERJ3GEYJ 180 V (18) | B | 61.6/72 |
| R579 | 7030009851 | S.RES ERA3YED 271V (270) | B | 57.9/72.8 |
| R580 | 7030009851 | S.RES ERA3YED 271V (270) | B | 57.9/71 |
| R581 | 7030003430 | S.RES ERJ3GEYJ 821 V (820) | B | 92.6/72.9 |
| R582 | 7030004030 | S.RES ERJ3GEYJ 5R6 V (5.6) | B | 91.8/70.9 |
| R583 | 7030003430 | S.RES ERJ3GEYJ 821 V (820) | B | 94.2/70.8 |
| R584 | 7510001671 | S.TMR NTCG16 4BH 103JT | T | 218.4/79.9 |
| R585 | 7030003600 | S.RES ERJ3GEYJ 223 V (22 k) | B | 25/89.8 |
| R587 | 7030003200 | S.RES ERJ3GEYJ 100 V (10) | B | 61.5/68.1 |
| R589 | 7030003400 | S.RES ERJ3GEYJ 471 V (470) | B | 64.5/63.7 |
| R590 | 7030003430 | S.RES ERJ3GEYJ 821 V (820) | B | 79.8/91.7 |
| R591 | 7030003430 | S.RES ERJ3GEYJ 821 V (820) | B | 81.5/91.7 |
| R592 | 7030000300 | S.RES MCR10EZHJ 220 (221) | B | 59.4/61.8 |
| R601 | 7030000260 | S.RES MCR10EZHJ 100 (101) | B | 42.7/43.5 |
| R602 | 7030000260 | S.RES MCR10EZHJ 100 (101) | B | 53.5/43.5 |
| R603 | 7030000260 | S.RES MCR10EZHJ 100 (101) | B | 64.3/43.5 |
| R604 | 7030000260 | S.RES MCR10EZHJ 100 (101) | B | 75.2/43.5 |
| R605 | 7030000260 | S.RES MCR10EZHJ 100 (101) | B | 86/43.5 |
| R606 | 7030000260 | S.RES MCR10EZHJ 100 (101) | T | 34.3/43.5 |
| R607 | 7030000260 | S.RES MCR10EZHJ 100 (101) | T | 43.3/43.5 |
| R608 | 7030000260 | S.RES MCR10EZHJ 100 (101) | T | 52.3/43.5 |
| R609 | 7030000260 | S.RES MCR10EZHJ 100 (101) | T | 61.3/43.5 |
| R610 | 7030003400 | S.RES ERJ3GEYJ 471 V (470) | T | 79.8/54 |
| R611 | 7030000260 | S.RES MCR10EZHJ 100 (101) | T | 70.3/43.5 |
| R612 | 7030009851 | S.RES ERA3YED 271V (270) | T | 44/54 |
| R613 | 7030003230 | S.RES ERJ3GEYJ 180 V (18) | T | 46.2/53.3 |
| R614 | 7030009851 | S.RES ERA3YED 271V (270) | T | 44/52.7 |
| R801 | 7030003380 | S.RES ERJ3GEYJ 331 V (330) | T | 37.2/26.2 |
| R802 | 7030009891 | S.RES ERA3YED 151V (150) | B | 37.2/18.7 |
| R803 | 7030003440 | S.RES ERJ3GEYJ 102 V (1 k) | B | 49.7/21 |
| R804 | 7030003490 | S.RES ERJ3GEYJ 272 V (2.7 k) | B | 47.8/21.7 |
| R805 | 7030003300 | S.RES ERJ3GEYJ 680 V (68) | T | 57.6/18.7 |
| R806 | 7030003320 | S.RES ERJ3GEYJ 101 V (100) | T | 56.2/18.7 |
| R807 | 7030003320 | S.RES ERJ3GEYJ 101 V (100) | T | 56.9/16.5 |
| R808 | 7030003640 | S.RES ERJ3GEYJ 473 V (47 k) | B | 89.9/87.6 |
| R809 | 7030003460 | S.RES ERJ3GEYJ 152 V (1.5 k) | B | 84.7/87.6 |
| R810 | 7030003680 | S.RES ERJ3GEYJ 104 V (100 k) | T | 34/22.3 |
| R811 | 7030003560 | S.RES ERJ3GEYJ 103 V (10 k) | T | 30.8/19.6 |
| R812 | 7030009851 | S.RES ERA3YED 271V (270) | T | 34/27.5 |
| R813 | 7030003230 | S.RES ERJ3GEYJ 180 V (18) | T | 34/26.2 |
| R814 | 7030009851 | S.RES ERA3YED 271V (270) | T | 34/24.9 |
| R815 | 7030003320 | S.RES ERJ3GEYJ 101 V (100) | T | 31.9/25.5 |
| R816 | 7030003680 | S.RES ERJ3GEYJ 104 V (100 k) | T | 31.2/23.6 |
| R817 | 7030003860 | S.RES ERJ3GE JPW V | T | 52.7/23.9 |
| R818 | 7030003320 | S.RES ERJ3GEYJ 101 V (100) | B | 41.7/21 |
| R820 | 7030003440 | S.RES ERJ3GEYJ 102 V (1 k) | T | 77.7/62.7 |
| R821 | 7030003320 | S.RES ERJ3GEYJ 101 V (100) | T | 88.2/60.9 |
| R822 | 7030003620 | S.RES ERJ3GEYJ 333 V (33 k) | T | 88.2/57.9 |
| R823 | 7030003280 | S.RES ERJ3GEYJ 470 V (47) | T | 83.2/51.5 |
| R824 | 7030003320 | S.RES ERJ3GEYJ 101 V (100) | T | 77/58.6 |
| R825 | 7030003320 | S.RES ERJ3GEYJ 101 V (100) | T | 82.3/33.8 |
| R826 | 7030003230 | S.RES ERJ3GEYJ 180 V (18) | T | 87.2/36.2 |
| R827 | 7030009851 | S.RES ERA3YED 271V (270) | T | 85.2/37 |
| R828 | 7030009851 | S.RES ERA3YED 271V (270) | T | 85.2/35.5 |
| R829 | 7030003400 | S.RES ERJ3GEYJ 471 V (470) | T | 86.5/55.1 |
| R830 | 7030003330 | S.RES ERJ3GEYJ 121 V (120) | T | 86/53.2 |
| R831 | 7030003600 | S.RES ERJ3GEYJ 223 V (22 k) | T | 83.2/54.5 |
| R832 | 7030003290 | S.RES ERJ3GEYJ 560 V (56) | B | 87.3/71.1 |
| R833 | 7030003480 | S.RES ERJ3GEYJ 222 V (2.2 k) | B | 89.4/71.8 |
| R834 | 7030003440 | S.RES ERJ3GEYJ 102 V (1 k) | B | 85.3/79.2 |
| R835 | 7030003440 | S.RES ERJ3GEYJ 102 V (1 k) | B | 83.1/74.2 |
| R836 | 7030003500 | S.RES ERJ3GEYJ 332 V (3.3 k) | B | 83.2/79.1 |
| R837 | 7030003480 | S.RES ERJ3GEYJ 222 V (2.2 k) | T | 29.8/81.6 |
| R838 | 7030003510 | S.RES ERJ3GEYJ 392 V (3.9 k) | T | 33.6/73.8 |
| R839 | 7030003480 | S.RES ERJ3GEYJ 222 V (2.2 k) | T | 38.1/73.4 |
| R840 | 7030003400 | S.RES ERJ3GEYJ 471 V (470) | T | 38.1/72.1 |
| R841 | 7030003300 | S.RES ERJ3GEYJ 680 V (68) | T | 35.3/71.6 |
| R851 | 7030009861 | S.RES ERA3YED 471V (470) | T | 110/87.6 |
| R852 | 7030003560 | S.RES ERJ3GEYJ 103 V (10 k) | T | 37.9/69.8 |
| R900 | 7030003320 | S.RES ERJ3GEYJ 101 V (100) | T | 126.2/5.8 |
| R901 | 7030003320 | S.RES ERJ3GEYJ 101 V (100) | B | 125.2/5.8 |
| R902 | 7030003320 | S.RES ERJ3GEYJ 101 V (100) | T | 124.2/5.8 |
| R903 | 7030003320 | S.RES ERJ3GEYJ 101 V (100) | B | 123.2/5.8 |
| R904 | 7030003320 | S.RES ERJ3GEYJ 101 V (100) | T | 122.2/5.8 |
| R906 | 7030003320 | S.RES ERJ3GEYJ 101 V (100) | T | 120.2/5.8 |
| R908 | 7030003320 | S.RES ERJ3GEYJ 101 V (100) | T | 118.2/5.8 |
| R909 | 7030003320 | S.RES ERJ3GEYJ 101 V (100) | B | 117.2/5.8 |
| R910 | 7030003320 | S.RES ERJ3GEYJ 101 V (100) | T | 116.2/5.8 |
| R911 | 7030003320 | S.RES ERJ3GEYJ 101 V (100) | B | 115.2/5.8 |
| R912 | 7030003320 | S.RES ERJ3GEYJ 101 V (100) | T | 114.2/5.8 |
| R913 | 7030003320 | S.RES ERJ3GEYJ 101 V (100) | B | 113.2/5.8 |
| R914 | 7030003320 | S.RES ERJ3GEYJ 101 V (100) | T | 112.2/5.8 |
| R915 | 7030003320 | S.RES ERJ3GEYJ 101 V (100) | B | 111.2/5.8 |
| R916 | 7030003320 | S.RES ERJ3GEYJ 101 V (100) | T | 110.2/5.8 |

M.=Mounted side (T: Mounted on the Top side, B: Mounted on the Bottom side)
S.=Surface mount

## [MAIN UNIT]

| REF NO. | ORDER NO. | DESCRIPTION | | M. | H/V LOCATION |
|---|---|---|---|---|---|
| R917 | 7030003320 | S.RES | ERJ3GEYJ 101 V (100) | B | 109.2/5.8 |
| R918 | 7030003320 | S.RES | ERJ3GEYJ 101 V (100) | T | 13.8/119.5 |
| R920 | 7030003320 | S.RES | ERJ3GEYJ 101 V (100) | T | 125.7/15.4 |
| R921 | 7030003320 | S.RES | ERJ3GEYJ 101 V (100) | B | 124.7/15.4 |
| R922 | 7030003320 | S.RES | ERJ3GEYJ 101 V (100) | T | 123.7/15.4 |
| R923 | 7030003320 | S.RES | ERJ3GEYJ 101 V (100) | B | 122.7/15.4 |
| R924 | 7030003320 | S.RES | ERJ3GEYJ 101 V (100) | T | 121.7/15.4 |
| R925 | 7030003320 | S.RES | ERJ3GEYJ 101 V (100) | B | 120.7/15.4 |
| R926 | 7030003320 | S.RES | ERJ3GEYJ 101 V (100) | T | 119.7/15.4 |
| R927 | 7030003320 | S.RES | ERJ3GEYJ 101 V (100) | B | 118.7/15.4 |
| R928 | 7030003320 | S.RES | ERJ3GEYJ 101 V (100) | T | 117.7/15.4 |
| R929 | 7030003320 | S.RES | ERJ3GEYJ 101 V (100) | B | 116.7/15.4 |
| R930 | 7030003320 | S.RES | ERJ3GEYJ 101 V (100) | T | 115.7/15.4 |
| R932 | 7030003320 | S.RES | ERJ3GEYJ 101 V (100) | T | 113.7/15.4 |
| R933 | 7030003320 | S.RES | ERJ3GEYJ 101 V (100) | B | 112.7/15.4 |
| R934 | 7030003320 | S.RES | ERJ3GEYJ 101 V (100) | T | 111.7/15.4 |
| R936 | 7030003320 | S.RES | ERJ3GEYJ 101 V (100) | T | 109.7/15.4 |
| R937 | 7030003320 | S.RES | ERJ3GEYJ 101 V (100) | B | 108.7/15.4 |
| R938 | 7030003320 | S.RES | ERJ3GEYJ 101 V (100) | T | 12.5/119.5 |
| R940 | 7030003320 | S.RES | ERJ3GEYJ 101 V (100) | T | 94.3/5.8 |
| R941 | 7030003320 | S.RES | ERJ3GEYJ 101 V (100) | B | 93.3/5.8 |
| R942 | 7030003320 | S.RES | ERJ3GEYJ 101 V (100) | T | 92.3/5.8 |
| R943 | 7030003320 | S.RES | ERJ3GEYJ 101 V (100) | B | 91.3/5.8 |
| R944 | 7030003320 | S.RES | ERJ3GEYJ 101 V (100) | T | 90.3/5.8 |
| R945 | 7030003320 | S.RES | ERJ3GEYJ 101 V (100) | B | 89.3/5.8 |
| R946 | 7030003320 | S.RES | ERJ3GEYJ 101 V (100) | T | 88.3/5.8 |
| R947 | 7030003320 | S.RES | ERJ3GEYJ 101 V (100) | B | 87.3/5.8 |
| R948 | 7030003320 | S.RES | ERJ3GEYJ 101 V (100) | T | 86.3/5.8 |
| R949 | 7030003320 | S.RES | ERJ3GEYJ 101 V (100) | B | 85.3/5.8 |
| R950 | 7030003320 | S.RES | ERJ3GEYJ 101 V (100) | T | 84.3/5.8 |
| R951 | 7030003320 | S.RES | ERJ3GEYJ 101 V (100) | B | 83.3/5.8 |
| R952 | 7030003320 | S.RES | ERJ3GEYJ 101 V (100) | T | 82.3/5.8 |
| R953 | 7030003320 | S.RES | ERJ3GEYJ 101 V (100) | B | 81.3/5.8 |
| R954 | 7030003320 | S.RES | ERJ3GEYJ 101 V (100) | T | 80.3/5.8 |
| R955 | 7030003320 | S.RES | ERJ3GEYJ 101 V (100) | B | 79.3/5.8 |
| R957 | 7030003320 | S.RES | ERJ3GEYJ 101 V (100) | B | 77.3/5.8 |
| R958 | 7030003320 | S.RES | ERJ3GEYJ 101 V (100) | T | 76.3/5.8 |
| R960 | 7030003320 | S.RES | ERJ3GEYJ 101 V (100) | T | 93.8/15.3 |
| R961 | 7030003320 | S.RES | ERJ3GEYJ 101 V (100) | B | 92.8/15.4 |
| R962 | 7030003320 | S.RES | ERJ3GEYJ 101 V (100) | T | 91.8/15.3 |
| R963 | 7030003320 | S.RES | ERJ3GEYJ 101 V (100) | B | 90.8/15.4 |
| R964 | 7030003320 | S.RES | ERJ3GEYJ 101 V (100) | T | 89.8/15.3 |
| R966 | 7030003320 | S.RES | ERJ3GEYJ 101 V (100) | T | 87.8/15.3 |
| R967 | 7030003320 | S.RES | ERJ3GEYJ 101 V (100) | B | 86.8/15.4 |
| R968 | 7030003320 | S.RES | ERJ3GEYJ 101 V (100) | T | 85.8/15.3 |
| R969 | 7030003320 | S.RES | ERJ3GEYJ 101 V (100) | B | 84.8/15.4 |
| R970 | 7030003320 | S.RES | ERJ3GEYJ 101 V (100) | T | 83.8/15.3 |
| R971 | 7030003320 | S.RES | ERJ3GEYJ 101 V (100) | B | 82.8/15.4 |
| R972 | 7030003320 | S.RES | ERJ3GEYJ 101 V (100) | T | 81.8/15.4 |
| R973 | 7030003320 | S.RES | ERJ3GEYJ 101 V (100) | B | 80.8/15.4 |
| R974 | 7030003320 | S.RES | ERJ3GEYJ 101 V (100) | T | 79.8/15.4 |
| R975 | 7030003320 | S.RES | ERJ3GEYJ 101 V (100) | B | 78.8/15.4 |
| R976 | 7030003320 | S.RES | ERJ3GEYJ 101 V (100) | T | 77.8/15.4 |
| R977 | 7030003320 | S.RES | ERJ3GEYJ 101 V (100) | B | 76.8/15.4 |
| R978 | 7030003320 | S.RES | ERJ3GEYJ 101 V (100) | T | 75.8/15.4 |
| R979 | 7030003320 | S.RES | ERJ3GEYJ 101 V (100) | B | 74.8/15.4 |
| | | | | | |
| C1 | 4030006880 | S.CER | C1608 JB 1H 472K-T | B | 207.5/109.2 |
| C2 | 4030006880 | S.CER | C1608 JB 1H 472K-T | T | 225.7/110.3 |
| C3 | 4030006880 | S.CER | C1608 JB 1H 472K-T | B | 220.4/106.6 |
| C4 | 4030006880 | S.CER | C1608 JB 1H 472K-T | T | 204.7/110.3 |
| C5 | 4030006880 | S.CER | C1608 JB 1H 472K-T | T | 222.2/110.3 |
| C6 | 4030006880 | S.CER | C1608 JB 1H 472K-T | T | 211.7/110.3 |
| C7 | 4030006880 | S.CER | C1608 JB 1H 472K-T | T | 215.2/110.3 |
| C8 | 4030006880 | S.CER | C1608 JB 1H 472K-T | T | 200.4/110.3 |
| C9 | 4030006880 | S.CER | C1608 JB 1H 472K-T | T | 193.4/110.3 |
| C10 | 4030006880 | S.CER | C1608 JB 1H 472K-T | T | 196.9/110.3 |
| C11 | 4030006880 | S.CER | C1608 JB 1H 472K-T | B | 168/106.8 |
| C12 | 4030006880 | S.CER | C1608 JB 1H 472K-T | T | 183.7/110.3 |
| C13 | 4030006880 | S.CER | C1608 JB 1H 472K-T | B | 178.4/106.6 |
| C14 | 4030006880 | S.CER | C1608 JB 1H 472K-T | T | 162.7/110.3 |
| C15 | 4030006880 | S.CER | C1608 JB 1H 472K-T | T | 180.2/110.3 |
| C16 | 4030006880 | S.CER | C1608 JB 1H 472K-T | T | 169.7/110.3 |
| C17 | 4030006880 | S.CER | C1608 JB 1H 472K-T | T | 173.2/110.3 |
| C18 | 4030006880 | S.CER | C1608 JB 1H 472K-T | T | 158.4/110.3 |
| C19 | 4030006880 | S.CER | C1608 JB 1H 472K-T | T | 151.4/110.3 |
| C20 | 4030006880 | S.CER | C1608 JB 1H 472K-T | T | 154.9/110.3 |
| C21 | 4030006880 | S.CER | C1608 JB 1H 472K-T | B | 163.9/96.8 |
| C22 | 4030006880 | S.CER | C1608 JB 1H 472K-T | B | 174.7/98 |
| C23 | 4030006880 | S.CER | C1608 JB 1H 472K-T | B | 167.1/98.1 |
| C24 | 4030006880 | S.CER | C1608 JB 1H 472K-T | B | 145.1/106.9 |
| C25 | 4510008540 | S.ELE | EEE1CA100SR | T | 218.3/83.6 |
| C26 | 4510008540 | S.ELE | EEE1CA100SR | T | 233.7/83.5 |
| C28 | 4510008540 | S.ELE | EEE1CA100SR | T | 191.1/80.5 |
| C29 | 4510008540 | S.ELE | EEE1CA100SR | T | 184.9/80.5 |
| C30 | 4510008540 | S.ELE | EEE1CA100SR | T | 184.2/92.3 |
| C31 | 4030011600 | S.CER | C1608 JB 1E 104K-T | T | 187.7/74.5 |
| C32 | 4510008540 | S.ELE | EEE1CA100SR | T | 179/82.1 |
| C33 | 4510008540 | S.ELE | EEE1CA100SR | T | 178.9/87 |
| C34 | 4030012600 | S.CER | C2012 JB 1A 105M-T | T | 189/92.3 |
| C35 | 4030012600 | S.CER | C2012 JB 1A 105M-T | T | 179.4/92.4 |
| C36 | 4510008500 | S.ELE | EEE1CA101WP | T | 222.1/104.5 |
| C37 | 4510008540 | S.ELE | EEE1CA100SR | T | 229.5/107.3 |
| C38 | 4510008500 | S.ELE | EEE1CA101WP | T | 174.3/104.1 |
| C39 | 4510008540 | S.ELE | EEE1CA100SR | T | 181.9/104.7 |
| C40 | 4510008540 | S.ELE | EEE1CA100SR | T | 190/63.4 |
| C41 | 4510008540 | S.ELE | EEE1CA100SR | T | 184/63.4 |
| C42 | 4030011600 | S.CER | C1608 JB 1E 104K-T | T | 187.7/77.1 |
| C43 | 4030011600 | S.CER | C1608 JB 1E 104K-T | T | 194.5/74.5 |
| C44 | 4030011600 | S.CER | C1608 JB 1E 104K-T | T | 180.9/77.1 |
| C45 | 4030012600 | S.CER | C2012 JB 1A 105M-T | T | 193.3/83.8 |
| C46 | 4030012600 | S.CER | C2012 JB 1A 105M-T | T | 193.3/90.9 |
| C50 | 4030006880 | S.CER | C1608 JB 1H 472K-T | B | 139.6/118.5 |

## [MAIN UNIT]

| REF NO. | ORDER NO. | DESCRIPTION | | M. | H/V LOCATION |
|---|---|---|---|---|---|
| C51 | 4010005380 | CER | HM13SJ YB 472K 500V | | |
| C52 | 4030006880 | S.CER | C1608 JB 1H 472K-T | B | 114.5/98.6 |
| C53 | 4030006880 | S.CER | C1608 JB 1H 472K-T | B | 116.2/96.3 |
| C54 | 4030006880 | S.CER | C1608 JB 1H 472K-T | B | 79.9/123.6 |
| C55 | 4030006880 | S.CER | C1608 JB 1H 472K-T | B | 79.9/118.7 |
| C56 | 4030006880 | S.CER | C1608 JB 1H 472K-T | B | 92.8/106.5 |
| C57 | 4030010760 | S.CER | C1608 CH 1H 331J-T | T | 179.5/70.9 |
| C58 | 4030010760 | S.CER | C1608 CH 1H 331J-T | T | 194.6/70.7 |
| C61 | 4030012600 | S.CER | C2012 JB 1A 105M-T | T | 119.1/77.8 |
| C62 | 4030012600 | S.CER | C2012 JB 1A 105M-T | T | 119.1/76 |
| C65 | 4030012600 | S.CER | C2012 JB 1A 105M-T | B | 108.1/76.2 |
| C68 | 4030006860 | S.CER | C1608 JB 1H 102K-T | B | 126.4/101.9 |
| C69 | 4030011600 | S.CER | C1608 JB 1E 104K-T | T | 121.5/90.8 |
| C70 | 4030011600 | S.CER | C1608 JB 1E 104K-T | B | 122.1/89.4 |
| C71 | 4030011600 | S.CER | C1608 JB 1E 104K-T | B | 136.8/96.8 |
| C80 | 4030007130 | S.CER | C1608 CH 1H 101J-T | B | 59.2/122.2 |
| C100 | 4030011600 | S.CER | C1608 JB 1E 104K-T | B | 208.4/91 |
| C101 | 4030011600 | S.CER | C1608 JB 1E 104K-T | T | 213.4/87.4 |
| C103 | 4510008550 | S.ELE | EEE1HA010SR | T | 210.7/83.6 |
| C105 | 4030011600 | S.CER | C1608 JB 1E 104K-T | B | 201.6/91 |
| C106 | 4030011600 | S.CER | C1608 JB 1E 104K-T | T | 206.6/87.4 |
| C108 | 4510008550 | S.ELE | EEE1HA010SR | T | 202.9/83.6 |
| C110 | 4510008540 | S.ELE | EEE1CA100SR | T | 209.8/63.3 |
| C113 | 4510008540 | S.ELE | EEE1CA100SR | T | 209.8/73.8 |
| C115 | 4510008540 | S.ELE | EEE1CA100SR | T | 209.8/48.7 |
| C116 | 4510008540 | S.ELE | EEE1CA100SR | T | 209.8/38.1 |
| C117 | 4510009120 | S.ELE | EEE1VA2R2NR | T | 215.7/73.8 |
| C118 | 4510009120 | S.ELE | EEE1VA2R2NR | T | 203.9/73.8 |
| C120 | 4510008540 | S.ELE | EEE1CA100SR | T | 223.6/50.7 |
| C121 | 4510008540 | S.ELE | EEE1CA100SR | T | 214.3/58 |
| C122 | 4510008540 | S.ELE | EEE1CA100SR | T | 204.7/58 |
| C123 | 4510008550 | S.ELE | EEE1HA010SR | T | 227/56.1 |
| C124 | 4510008550 | S.ELE | EEE1HA010SR | T | 227.1/60.9 |
| C125 | 4510008540 | S.ELE | EEE1CA100SR | T | 218.8/67 |
| C126 | 4510008540 | S.ELE | EEE1CA100SR | T | 223.6/67 |
| C127 | 4510008550 | S.ELE | EEE1HA010SR | T | 234.1/60.9 |
| C128 | 4510008550 | S.ELE | EEE1HA010SR | T | 233.3/56.1 |
| C129 | 4030008650 | S.CER | C1608 JB 1H 332K-T | T | 215.6/67.3 |
| C130 | 4030008650 | S.CER | C1608 JB 1H 332K-T | T | 203.8/67.3 |
| C131 | 4030012600 | S.CER | C2012 JB 1A 105M-T | T | 220.3/52 |
| C132 | 4030012600 | S.CER | C2012 JB 1A 105M-T | T | 218.5/52 |
| C133 | 4030008880 | S.CER | C1608 JB 1H 223K-T | T | 232.2/66.6 |
| C134 | 4030008950 | S.CER | C2012 JB 1C 823K-T | T | 231.3/69 |
| C135 | 4030008880 | S.CER | C1608 JB 1H 223K-T | T | 234.1/52.3 |
| C136 | 4030008950 | S.CER | C2012 JB 1C 823K-T | T | 232.4/50.1 |
| C140 | 4510008550 | S.ELE | EEE1HA010SR | T | 249.6/35.6 |
| C141 | 4510008190 | ELE | EEUFC1E222S | | |
| C142 | 4510009080 | S.ELE | EEE1HAR22SR | T | 253.9/59.1 |
| C143 | 4510008500 | S.ELE | EEE1CA101WP | T | 253.3/67.9 |
| C144 | 4510008180 | ELE | EEUFC1E102S | | |
| C145 | 4510008180 | ELE | EEUFC1E102S | | |
| C146 | 4030011600 | S.CER | C1608 JB 1E 104K-T | B | 252.2/101.3 |
| C147 | 4030011600 | S.CER | C1608 JB 1E 104K-T | B | 242.4/107.8 |
| C148 | 4030006880 | S.CER | C1608 JB 1H 472K-T | B | 247.8/97.2 |
| C149 | 4030006880 | S.CER | C1608 JB 1H 472K-T | B | 252.2/95.4 |
| C150 | 4030006880 | S.CER | C1608 JB 1H 472K-T | B | 239.9/97.2 |
| C151 | 4030011600 | S.CER | C1608 JB 1E 104K-T | T | 228.6/73.1 |
| C152 | 4030011600 | S.CER | C1608 JB 1E 104K-T | T | 233.4/45.5 |
| C180 | 4510009010 | S.ELE | EEE1AA221P | T | 188.5/50.4 |
| C181 | 4510008540 | S.ELE | EEE1CA100SR | T | 209.5/58 |
| C182 | 4510008540 | S.ELE | EEE1CA100SR | T | 199.9/58 |
| C183 | 4510008540 | S.ELE | EEE1CA100SR | T | 194.4/57.3 |
| C184 | 4510008540 | S.ELE | EEE1CA100SR | T | 195.8/52.5 |
| C185 | 4510008540 | S.ELE | EEE1CA100SR | T | 195.8/47.7 |
| C186 | 4510008540 | S.ELE | EEE1CA100SR | T | 180.2/50.5 |
| C187 | 4030011600 | S.CER | C1608 JB 1E 104K-T | T | 183.3/39.5 |
| C188 | 4510008540 | S.ELE | EEE1CA100SR | T | 194.4/42.8 |
| C189 | 4510008540 | S.ELE | EEE1CA100SR | T | 180.2/45.6 |
| C190 | 4030011340 | S.CER | C1608 CH 1H 471J-T | T | 194.6/33.4 |
| C191 | 4030012610 | S.CER | C2012 JB 1C 474K-T | T | 191.1/37.7 |
| C192 | 4030011340 | S.CER | C1608 CH 1H 471J-T | T | 180.4/35.4 |
| C193 | 4510008540 | S.ELE | EEE1CA100SR | T | 186.8/31.6 |
| C194 | 4030012600 | S.CER | C2012 JB 1A 105M-T | T | 180.9/59.4 |
| C195 | 4030012600 | S.CER | C2012 JB 1A 105M-T | T | 180.7/54.6 |
| C196 | 4510008500 | S.ELE | EEE1CA101WP | T | 176.1/36.5 |
| C197 | 4510008500 | S.ELE | EEE1CA101WP | T | 199.7/31.9 |
| C198 | 4030011600 | S.CER | C1608 JB 1E 104K-T | T | 125.6/95.8 |
| C200 | 4510008540 | S.ELE | EEE1CA100SR | T | 153.3/80.5 |
| C201 | 4510008540 | S.ELE | EEE1CA100SR | T | 160.5/80 |
| C203 | 4510008550 | S.ELE | EEE1HA010SR | T | 170.6/70.7 |
| C204 | 4510008550 | S.ELE | EEE1HA010SR | T | 142.1/70.9 |
| C205 | 4030011600 | S.CER | C1608 JB 1E 104K-T | B | 148.2/71.8 |
| C206 | 4030009970 | S.CER | C1608 JB 1H 182K-T | T | 192/33.4 |
| C207 | 4030009970 | S.CER | C1608 JB 1H 182K-T | T | 181.1/33.6 |
| C208 | 4030011600 | S.CER | C1608 JB 1E 104K-T | T | 219/42.5 |
| C209 | 4030011600 | S.CER | C1608 JB 1E 104K-T | B | 244/25.5 |
| C210 | 4510008550 | S.ELE | EEE1HA010SR | T | 168.1/100.5 |
| C211 | 4510008540 | S.ELE | EEE1CA100SR | T | 160.5/84.8 |
| C212 | 4510008530 | S.ELE | EEE1HA2R2SR | T | 169.7/94.9 |
| C213 | 4030017840 | S.CER | C2012 CH 1H 222J-T | T | 166.7/91.5 |
| C214 | 4510008540 | S.ELE | EEE1CA100SR | T | 170.6/85.3 |
| C215 | 4510008550 | S.ELE | EEE1HA010SR | T | 150.5/85.3 |
| C216 | 4510008550 | S.ELE | EEE1HA010SR | T | 142.6/85.3 |
| C217 | 4030007120 | S.CER | C1608 CH 1H 820J-T | T | 164.9/73.5 |
| C220 | 4510008550 | S.ELE | EEE1HA010SR | T | 163.3/100.5 |
| C221 | 4510008540 | S.ELE | EEE1CA100SR | T | 170.6/90.1 |
| C222 | 4510008530 | S.ELE | EEE1HA2R2SR | T | 151.3/94.9 |
| C223 | 4030017840 | S.CER | C2012 CH 1H 222J-T | T | 154.3/91.5 |
| C225 | 4510008550 | S.ELE | EEE1HA010SR | T | 150.5/90.1 |
| C226 | 4510008550 | S.ELE | EEE1HA010SR | T | 142.6/90.2 |
| C230 | 4510008500 | S.ELE | EEE1CA101WP | T | 68.9/10.5 |
| C231 | 4510008500 | S.ELE | EEE1CA101WP | T | 84.1/21.9 |
| C233 | 4510008550 | S.ELE | EEE1HA010SR | T | 69.8/16.5 |
| C234 | 4030007170 | S.CER | C1608 CH 1H 221J-T | T | 73/20.3 |

M.=Mounted side (T: Mounted on the Top side, B: Mounted on the Bottom side)
S.=Surface mount

## [MAIN UNIT]

| REF NO. | ORDER NO. | DESCRIPTION | M. | H/V LOCATION |
|---|---|---|---|---|
| C235 | 4030011600 | S.CER C1608 JB 1E 104K-T | T | 79.1/22 |
| C241 | 4510008540 | S.ELE EEE1CA100SR | T | 232.1/28.1 |
| C242 | 4510004591 | ELE 16 ME 470 HC | | |
| C243 | 4510008500 | S.ELE EEE1CA101WP | T | 176.7/63 |
| C244 | 4030011600 | S.CER C1608 JB 1E 104K-T | T | 176/56.8 |
| C249 | 4030011600 | S.CER C1608 JB 1E 104K-T | T | 160.3/68.3 |
| C250 | 4030011600 | S.CER C1608 JB 1E 104K-T | T | 133.1/39.1 |
| C251 | 4030011600 | S.CER C1608 JB 1E 104K-T | T | 143.3/32.8 |
| C260 | 4030011600 | S.CER C1608 JB 1E 104K-T | T | 133.1/53.5 |
| C261 | 4030011600 | S.CER C1608 JB 1E 104K-T | T | 143.2/47.1 |
| C290 | 4030011600 | S.CER C1608 JB 1E 104K-T | T | 149.1/28.2 |
| C291 | 4030011600 | S.CER C1608 JB 1E 104K-T | T | 142.9/38.1 |
| C310 | 4030011600 | S.CER C1608 JB 1E 104K-T | T | 153.7/43.3 |
| C311 | 4030011600 | S.CER C1608 JB 1E 104K-T | T | 142.9/52.6 |
| C330 | 4030011600 | S.CER C1608 JB 1E 104K-T | T | 154.6/58.5 |
| C331 | 4030011600 | S.CER C1608 JB 1E 104K-T | T | 154.6/63.5 |
| C332 | 4030011600 | S.CER C1608 JB 1E 104K-T | T | 162.4/55.9 |
| C333 | 4030011600 | S.CER C1608 JB 1E 104K-T | T | 164.7/66.8 |
| C340 | 4030017810 | S.CER C1608 CH 1H 102J-T | B | 206/97 |
| C341 | 4030017810 | S.CER C1608 CH 1H 102J-T | B | 191.2/97 |
| C342 | 4030011600 | S.CER C1608 JB 1E 104K-T | B | 199.8/26.2 |
| C343 | 4030007130 | S.CER C1608 CH 1H 101J-T | B | 211.8/97 |
| C344 | 4510008590 | S.ELE EEE1AA101SP | T | 209.7/30.6 |
| C351 | 4510008540 | S.ELE EEE1CA100SR | T | 132.4/89.7 |
| C352 | 4030011600 | S.CER C1608 JB 1E 104K-T | T | 127.1/84 |
| C360 | 4030017810 | S.CER C1608 CH 1H 102J-T | B | 153.8/96.9 |
| C361 | 4030017810 | S.CER C1608 CH 1H 102J-T | B | 141.8/92.7 |
| C362 | 4030011600 | S.CER C1608 JB 1E 104K-T | B | 144.7/27.5 |
| C363 | 4030007130 | S.CER C1608 CH 1H 101J-T | B | 157.1/96.9 |
| C364 | 4510008590 | S.ELE EEE1AA101SP | T | 152.8/14.7 |
| C380 | 4030017810 | S.CER C1608 CH 1H 102J-T | B | 27.6/37.6 |
| C381 | 4030017810 | S.CER C1608 CH 1H 102J-T | B | 27.7/52.4 |
| C383 | 4030007130 | S.CER C1608 CH 1H 101J-T | B | 16.5/52.2 |
| C384 | 4510008590 | S.ELE EEE1AA101SP | T | 92.9/45.8 |
| C400 | 4030006880 | S.CER C1608 JB 1H 472K-T | T | 240.5/11.7 |
| C401 | 4030006880 | S.CER C1608 JB 1H 472K-T | B | 234.8/15.5 |
| C402 | 4030006880 | S.CER C1608 JB 1H 472K-T | B | 238.1/15.5 |
| C403 | 4030006880 | S.CER C1608 JB 1H 472K-T | T | 230.5/16 |
| C404 | 4030006880 | S.CER C1608 JB 1H 472K-T | T | 231.9/13.1 |
| C405 | 4030006880 | S.CER C1608 JB 1H 472K-T | T | 43.2/12.9 |
| C406 | 4030006880 | S.CER C1608 JB 1H 472K-T | T | 31.1/15.3 |
| C407 | 4030006880 | S.CER C1608 JB 1H 472K-T | T | 43.2/11.6 |
| C408 | 4030006880 | S.CER C1608 JB 1H 472K-T | T | 32/12.6 |
| C409 | 4030006880 | S.CER C1608 JB 1H 472K-T | T | 30.7/12.6 |
| C410 | 4030006880 | S.CER C1608 JB 1H 472K-T | T | 14.7/41 |
| C411 | 4030006880 | S.CER C1608 JB 1H 472K-T | B | 14.7/39.6 |
| C412 | 4030006880 | S.CER C1608 JB 1H 472K-T | T | 14.7/38 |
| C413 | 4030006880 | S.CER C1608 JB 1H 472K-T | B | 14.7/36.4 |
| C414 | 4030006880 | S.CER C1608 JB 1H 472K-T | B | 12.7/33 |
| C415 | 4030006880 | S.CER C1608 JB 1H 472K-T | T | 12.8/32 |
| C416 | 4030006880 | S.CER C1608 JB 1H 472K-T | B | 12.8/31 |
| C418 | 4030006880 | S.CER C1608 JB 1H 472K-T | B | 12/28.2 |
| C430 | 4030006880 | S.CER C1608 JB 1H 472K-T | B | 9/68.9 |
| C431 | 4030006880 | S.CER C1608 JB 1H 472K-T | B | 9/70.9 |
| C432 | 4030006880 | S.CER C1608 JB 1H 472K-T | B | 9/72.9 |
| C435 | 4030006880 | S.CER C1608 JB 1H 472K-T | B | 9/74.5 |
| C440 | 4030006880 | S.CER C1608 JB 1H 472K-T | T | 166.2/13.5 |
| C441 | 4030006880 | S.CER C1608 JB 1H 472K-T | T | 158.9/13.1 |
| C442 | 4030006880 | S.CER C1608 JB 1H 472K-T | T | 162.6/15.7 |
| C450 | 4030006880 | S.CER C1608 JB 1H 472K-T | B | 250.3/14.2 |
| C451 | 4030006880 | S.CER C1608 JB 1H 472K-T | T | 241.8/10.8 |
| C452 | 4030006880 | S.CER C1608 JB 1H 472K-T | B | 244/23.7 |
| C453 | 4030006880 | S.CER C1608 JB 1H 472K-T | B | 244/27.3 |
| C454 | 4030006880 | S.CER C1608 JB 1H 472K-T | B | 244.1/29 |
| C455 | 4030006880 | S.CER C1608 JB 1H 472K-T | B | 244.1/32.3 |
| C456 | 4030006880 | S.CER C1608 JB 1H 472K-T | B | 250.4/39.6 |
| C460 | 4510008550 | S.ELE EEE1HA010SR | T | 142.1/80.5 |
| C461 | 4510008550 | S.ELE EEE1HA010SR | T | 170.6/75.7 |
| C464 | 4510008540 | S.ELE EEE1CA100SR | T | 153.3/75.7 |
| C465 | 4030011600 | S.CER C1608 JB 1E 104K-T | B | 144.1/75.4 |
| C466 | 4030011600 | S.CER C1608 JB 1E 104K-T | B | 148.2/75.4 |
| C467 | 4030012600 | S.CER C2012 JB 1A 105M-T | T | 139.3/76.4 |
| C469 | 4510008550 | S.ELE EEE1HA010SR | T | 170.6/80.5 |
| C470 | 4510008550 | S.ELE EEE1HA010SR | T | 153.3/70.9 |
| C480 | 4550007320 | S.TAN F930J226MAABMA | B | 216.6/32.3 |
| C481 | 4550007320 | S.TAN F930J226MAABMA | B | 208.7/31.3 |
| C483 | 4550007320 | S.TAN F930J226MAABMA | B | 156/16.2 |
| C484 | 4550007320 | S.TAN F930J226MAABMA | B | 163.9/15.2 |
| C486 | 4550007320 | S.TAN F930J226MAABMA | B | 93.6/55.4 |
| C487 | 4550007320 | S.TAN F930J226MAABMA | B | 93.5/47.5 |
| C489 | 4030011600 | S.CER C1608 JB 1E 104K-T | B | 220.9/31.1 |
| C490 | 4030011600 | S.CER C1608 JB 1E 104K-T | B | 150.2/13.6 |
| C491 | 4030011600 | S.CER C1608 JB 1E 104K-T | B | 89.8/57 |
| C492 | 4030006880 | S.CER C1608 JB 1H 472K-T | T | 207.6/13 |
| C493 | 4510008540 | S.ELE EEE1CA100SR | T | 205.4/3.8 |
| C494 | 4510004591 | ELE 16 ME 470 HC | | |
| C495 | 4030011600 | S.CER C1608 JB 1E 104K-T | B | 26.3/123 |
| C496 | 4030011600 | S.CER C1608 JB 1E 104K-T | B | 5.7/119.9 |
| C497 | 4030011600 | S.CER C1608 JB 1E 104K-T | T | 12.7/122.5 |
| C498 | 4510004591 | ELE 16 ME 470 HC | | |
| C499 | 4030011600 | S.CER C1608 JB 1E 104K-T | B | 229.4/26.6 |
| C501 | 4030011600 | S.CER C1608 JB 1E 104K-T | T | 19.2/58.3 |
| C502 | 4030010020 | S.CER C1608 JB 1H 122K-T | T | 23.7/58.3 |
| C503 | 4030009980 | S.CER C1608 JB 1H 152K-T | T | 22.2/60.9 |
| C505 | 4030011330 | S.CER C1608 CH 1H 391J-T | T | 25.2/58.3 |
| C506 | 4030011600 | S.CER C1608 JB 1E 104K-T | T | 26/64.4 |
| C507 | 4510008540 | S.ELE EEE1CA100SR | T | 29.1/66.3 |
| C508 | 4510008540 | S.ELE EEE1CA100SR | T | 16.1/66.3 |
| C509 | 4030011600 | S.CER C1608 JB 1E 104K-T | T | 19.2/66.5 |
| C510 | 4030008470 | S.CER C1608 JB 1H 272K-T | T | 20.7/72.4 |
| C511 | 4030011280 | S.CER C1608 CH 1H 271J-T | T | 25.2/72.4 |
| C512 | 4030011600 | S.CER C1608 JB 1E 104K-T | T | 26/76.8 |
| C513 | 4510008540 | S.ELE EEE1CA100SR | T | 29.1/77.7 |
| C514 | 4030011600 | S.CER C1608 JB 1E 104K-T | T | 19.2/78.4 |

## [MAIN UNIT]

| REF NO. | ORDER NO. | DESCRIPTION | M. | H/V LOCATION |
|---|---|---|---|---|
| C515 | 4510008540 | S.ELE EEE1CA100SR | T | 16.1/78.2 |
| C516 | 4030006860 | S.CER C1608 JB 1H 102K-T | T | 22.7/87.5 |
| C517 | 4030011600 | S.CER C1608 JB 1E 104K-T | T | 20.3/91.9 |
| C518 | 4030011600 | S.CER C1608 JB 1E 104K-T | T | 25.3/87.5 |
| C519 | 4030011600 | S.CER C1608 JB 1E 104K-T | T | 26.6/87.5 |
| C520 | 4510008540 | S.ELE EEE1CA100SR | T | 30.4/86.7 |
| C521 | 4030011600 | S.CER C1608 JB 1E 104K-T | T | 24/87.5 |
| C522 | 4030011600 | S.CER C1608 JB 1E 104K-T | B | 18.6/91.9 |
| C523 | 4030011600 | S.CER C1608 JB 1E 104K-T | B | 21.6/91.9 |
| C524 | 4510008540 | S.ELE EEE1CA100SR | T | 29.7/97 |
| C525 | 4030006880 | S.CER C1608 JB 1H 472K-T | T | 26.1/91.9 |
| C526 | 4030011600 | S.CER C1608 JB 1E 104K-T | B | 26.1/87.7 |
| C527 | 4030006880 | S.CER C1608 JB 1H 472K-T | B | 29.5/91.9 |
| C528 | 4030011600 | S.CER C1608 JB 1E 104K-T | B | 29.5/94.9 |
| C529 | 4030011600 | S.CER C1608 JB 1E 104K-T | B | 33.5/87.1 |
| C530 | 4030011600 | S.CER C1608 JB 1E 104K-T | B | 33.5/98.8 |
| C531 | 4030006880 | S.CER C1608 JB 1H 472K-T | B | 37.2/94.6 |
| C532 | 4030006880 | S.CER C1608 JB 1H 472K-T | B | 37.2/91.3 |
| C533 | 4030006880 | S.CER C1608 JB 1H 472K-T | B | 46.3/95.1 |
| C534 | 4030006880 | S.CER C1608 JB 1H 472K-T | B | 46.3/82 |
| C535 | 4030006880 | S.CER C1608 JB 1H 472K-T | B | 47.3/88.5 |
| C536 | 4030011600 | S.CER C1608 JB 1E 104K-T | B | 42.7/91.4 |
| C537 | 4030006880 | S.CER C1608 JB 1H 472K-T | B | 51.7/82 |
| C538 | 4030008920 | S.CER C1608 JB 1H 473K-T | B | 50.5/85.7 |
| C539 | 4030011600 | S.CER C1608 JB 1E 104K-T | T | 52.2/84.4 |
| C540 | 4510008540 | S.ELE EEE1CA100SR | T | 49.1/84.5 |
| C541 | 4030011600 | S.CER C1608 JB 1E 104K-T | B | 49.9/95.1 |
| C544 | 4030009530 | S.CER C1608 CH 1H 030B-T | T | 88.8/94.2 |
| C545 | 4030011600 | S.CER C1608 JB 1E 104K-T | T | 131.8/108 |
| C546 | 4030011340 | S.CER C1608 CH 1H 471J-T | B | 69.8/90.7 |
| C548 | 4030011600 | S.CER C1608 JB 1E 104K-T | T | 128.7/102.3 |
| C550 | 4510008540 | S.ELE EEE1CA100SR | T | 127.4/108 |
| C551 | 4030006880 | S.CER C1608 JB 1H 472K-T | B | 101.6/91.6 |
| C552 | 4030006860 | S.CER C1608 JB 1H 102K-T | B | 106.4/82.7 |
| C553 | 4030011770 | S.CER C1608 CH 1H 060B-T | B | 104.8/82.7 |
| C554 | 4030011600 | S.CER C1608 JB 1E 104K-T | B | 103/79.3 |
| C555 | 4030007030 | S.CER C1608 CH 1H 150J-T | B | 97.9/80.1 |
| C556 | 4030006880 | S.CER C1608 JB 1H 472K-T | B | 102.9/76.5 |
| C558 | 4030007040 | S.CER C1608 CH 1H 180J-T | T | 81.9/69.4 |
| C559 | 4030006880 | S.CER C1608 JB 1H 472K-T | T | 108.4/67.1 |
| C560 | 4030007080 | S.CER C1608 CH 1H 390J-T | T | 108.4/64.2 |
| C561 | 4030006880 | S.CER C1608 JB 1H 472K-T | T | 105/71.3 |
| C562 | 4030006860 | S.CER C1608 JB 1H 102K-T | B | 105.6/64.2 |
| C563 | 4030011600 | S.CER C1608 JB 1E 104K-T | T | 98.8/71.3 |
| C564 | 4030007080 | S.CER C1608 CH 1H 390J-T | B | 75.9/67.2 |
| C565 | 4030007130 | S.CER C1608 CH 1H 101J-T | B | 72.5/68.9 |
| C566 | 4030007120 | S.CER C1608 CH 1H 820J-T | B | 69.4/68.5 |
| C567 | 4030007090 | S.CER C1608 CH 1H 470J-T | B | 69.4/70.3 |
| C568 | 4030007130 | S.CER C1608 CH 1H 101J-T | B | 67.1/69.1 |
| C569 | 4030011600 | S.CER C1608 JB 1E 104K-T | B | 62.8/68.1 |
| C570 | 4030006900 | S.CER C1608 JB 1H 103K-T | B | 62.9/59.2 |
| C571 | 4030011600 | S.CER C1608 JB 1E 104K-T | B | 58.8/66 |
| C572 | 4030006900 | S.CER C1608 JB 1H 103K-T | B | 60/58.4 |
| C573 | 4030011600 | S.CER C1608 JB 1E 104K-T | B | 66.7/59.2 |
| C574 | 4030011600 | S.CER C1608 JB 1E 104K-T | B | 53.3/57 |
| C576 | 4610001590 | S.TRI TZC3R100A110R00 | T | 95.5/95.8 |
| C577 | 4030011600 | S.CER C1608 JB 1E 104K-T | B | 54.6/63 |
| C578 | 4030007100 | S.CER C1608 CH 1H 560J-T | B | 91.4/74.5 |
| C579 | 4030006980 | S.CER C1608 CH 1H 070D-T | B | 89.2/76.8 |
| C580 | 4030007100 | S.CER C1608 CH 1H 560J-T | B | 93.2/76.5 |
| C581 | 4030007050 | S.CER C1608 CH 1H 220J-T | B | 22.6/69.5 |
| C582 | 4030007050 | S.CER C1608 CH 1H 220J-T | T | 20.7/84.6 |
| C583 | 4030011600 | S.CER C1608 JB 1E 104K-T | T | 27.2/81.6 |
| C584 | 4030009650 | S.CER C1608 CH 1H 240J-T | B | 104.5/67.3 |
| C585 | 4030006980 | S.CER C1608 CH 1H 070D-T | B | 102.9/67.3 |
| C586 | 4030007070 | S.CER C1608 CH 1H 330J-T | B | 98.5/70.2 |
| C587 | 4030007010 | S.CER C1608 CH 1H 100D-T | B | 97/64.9 |
| C588 | 4030007060 | S.CER C1608 CH 1H 270J-T | B | 96.5/70.2 |
| C589 | 4030007020 | S.CER C1608 CH 1H 120J-T | B | 63.8/72.8 |
| C590 | 4030007100 | S.CER C1608 CH 1H 560J-T | B | 62.1/74.5 |
| C601 | 4030006860 | S.CER C1608 JB 1H 102K-T | B | 40.9/52.4 |
| C602 | 4030006860 | S.CER C1608 JB 1H 102K-T | B | 42.7/52.4 |
| C603 | 4030011600 | S.CER C1608 JB 1E 104K-T | B | 40.9/49.1 |
| C604 | 4030007140 | S.CER C1608 CH 1H 121J-T | B | 38.1/49.8 |
| C605 | 4030010760 | S.CER C1608 CH 1H 331J-T | B | 38.1/48 |
| C606 | 4030007160 | S.CER C1608 CH 1H 181J-T | B | 33.8/45.5 |
| C607 | 4030007060 | S.CER C1608 CH 1H 270J-T | B | 35.6/45.5 |
| C608 | 4030010760 | S.CER C1608 CH 1H 331J-T | B | 38.1/46.2 |
| C609 | 4030007090 | S.CER C1608 CH 1H 470J-T | B | 38.1/40.8 |
| C610 | 4030007160 | S.CER C1608 CH 1H 181J-T | B | 35.6/41.5 |
| C611 | 4030007060 | S.CER C1608 CH 1H 270J-T | B | 33.8/41.5 |
| C612 | 4030007140 | S.CER C1608 CH 1H 121J-T | B | 38.1/37.1 |
| C613 | 4030010760 | S.CER C1608 CH 1H 331J-T | B | 38.1/39 |
| C614 | 4030006860 | S.CER C1608 JB 1H 102K-T | B | 40.9/34.5 |
| C615 | 4030011600 | S.CER C1608 JB 1E 104K-T | B | 40.9/37.8 |
| C616 | 4030006860 | S.CER C1608 JB 1H 102K-T | B | 42.7/34.5 |
| C617 | 4030010040 | S.CER C1608 JB 1H 561K-T | B | 51.7/52.4 |
| C618 | 4030010760 | S.CER C1608 CH 1H 331J-T | B | 53.5/52.4 |
| C619 | 4030011600 | S.CER C1608 JB 1E 104K-T | B | 51.7/49.1 |
| C620 | 4030010760 | S.CER C1608 CH 1H 331J-T | B | 48.9/49.8 |
| C621 | 4030007080 | S.CER C1608 CH 1H 390J-T | B | 48.9/48 |
| C622 | 4030007080 | S.CER C1608 CH 1H 390J-T | B | 44.5/45.5 |
| C623 | 4030010760 | S.CER C1608 CH 1H 331J-T | B | 46.4/45.5 |
| C624 | 4030007090 | S.CER C1608 CH 1H 470J-T | B | 48.9/46.2 |
| C625 | 4030010760 | S.CER C1608 CH 1H 331J-T | B | 48.9/40.8 |
| C626 | 4030007080 | S.CER C1608 CH 1H 390J-T | B | 46.4/41.5 |
| C627 | 4030010760 | S.CER C1608 CH 1H 331J-T | B | 44.6/41.5 |
| C628 | 4030007080 | S.CER C1608 CH 1H 390J-T | B | 48.9/37.1 |
| C629 | 4030010760 | S.CER C1608 CH 1H 331J-T | B | 48.9/39 |
| C630 | 4030010760 | S.CER C1608 CH 1H 331J-T | B | 51.7/34.5 |
| C631 | 4030011600 | S.CER C1608 JB 1E 104K-T | B | 51.7/37.8 |
| C632 | 4030010040 | S.CER C1608 JB 1H 561K-T | B | 53.5/34.5 |
| C633 | 4030010040 | S.CER C1608 JB 1H 561K-T | B | 62.5/52.4 |
| C634 | 4030011330 | S.CER C1608 CH 1H 391J-T | B | 64.3/52.4 |

M.=Mounted side (T: Mounted on the Top side, B: Mounted on the Bottom side)
S.=Surface mount

## [MAIN UNIT]

| REF NO. | ORDER NO. | DESCRIPTION | M. | H/V LOCATION |
|---|---|---|---|---|
| C635 | 4030011600 | S.CER C1608 JB 1E 104K-T | B | 62.5/49.1 |
| C636 | 4030007160 | S.CER C1608 CH 1H 181J-T | B | 59.7/49.8 |
| C637 | 4030007070 | S.CER C1608 CH 1H 330J-T | B | 59.7/48 |
| C638 | 4030007030 | S.CER C1608 CH 1H 150J-T | B | 55.4/45.5 |
| C639 | 4030007120 | S.CER C1608 CH 1H 820J-T | B | 57.2/45.5 |
| C640 | 4030007100 | S.CER C1608 CH 1H 560J-T | B | 59.7/46.2 |
| C641 | 4030007140 | S.CER C1608 CH 1H 121J-T | B | 59.7/40.8 |
| C642 | 4030007030 | S.CER C1608 CH 1H 150J-T | B | 57.2/41.5 |
| C643 | 4030007120 | S.CER C1608 CH 1H 820J-T | B | 55.4/41.5 |
| C644 | 4030007070 | S.CER C1608 CH 1H 330J-T | B | 59.7/37.1 |
| C645 | 4030007160 | S.CER C1608 CH 1H 181J-T | B | 59.7/39 |
| C646 | 4030011330 | S.CER C1608 CH 1H 391J-T | B | 62.5/34.5 |
| C647 | 4030011600 | S.CER C1608 JB 1E 104K-T | B | 62.5/37.8 |
| C648 | 4030017800 | S.CER C1608 CH 1H 561J-T | B | 64.3/34.5 |
| C649 | 4030010760 | S.CER C1608 CH 1H 331J-T | B | 73.4/52.4 |
| C650 | 4030007150 | S.CER C1608 CH 1H 151J-T | B | 75.2/52.4 |
| C651 | 4030011600 | S.CER C1608 JB 1E 104K-T | B | 73.4/49.1 |
| C652 | 4030007150 | S.CER C1608 CH 1H 151J-T | B | 70.5/49.8 |
| C653 | 4030007060 | S.CER C1608 CH 1H 270J-T | B | 70.5/48 |
| C654 | 4030007060 | S.CER C1608 CH 1H 270J-T | B | 66.2/45.5 |
| C655 | 4030007140 | S.CER C1608 CH 1H 121J-T | B | 68/45.5 |
| C656 | 4030007010 | S.CER C1608 CH 1H 100D-T | B | 70.5/46.2 |
| C657 | 4030007150 | S.CER C1608 CH 1H 151J-T | B | 70.5/40.8 |
| C658 | 4030007060 | S.CER C1608 CH 1H 270J-T | B | 68/41.5 |
| C659 | 4030007140 | S.CER C1608 CH 1H 121J-T | B | 66.2/41.5 |
| C660 | 4030007060 | S.CER C1608 CH 1H 270J-T | B | 70.5/37.1 |
| C661 | 4030007150 | S.CER C1608 CH 1H 151J-T | B | 70.5/39 |
| C662 | 4030007150 | S.CER C1608 CH 1H 151J-T | B | 73.3/34.5 |
| C663 | 4030011600 | S.CER C1608 JB 1E 104K-T | B | 73.3/37.8 |
| C664 | 4030010760 | S.CER C1608 CH 1H 331J-T | B | 75.2/34.5 |
| C665 | 4030007170 | S.CER C1608 CH 1H 221J-T | B | 84.2/52.4 |
| C666 | 4030007170 | S.CER C1608 CH 1H 221J-T | B | 86/52.4 |
| C667 | 4030011600 | S.CER C1608 JB 1E 104K-T | B | 84.2/49.1 |
| C668 | 4030007130 | S.CER C1608 CH 1H 101J-T | B | 81.4/49.8 |
| C669 | 4030007050 | S.CER C1608 CH 1H 220J-T | B | 81.4/48 |
| C670 | 4030007080 | S.CER C1608 CH 1H 390J-T | B | 77.1/45.5 |
| C671 | 4030007070 | S.CER C1608 CH 1H 330J-T | B | 78.9/45.5 |
| C672 | 4030007050 | S.CER C1608 CH 1H 220J-T | B | 81.4/40.8 |
| C673 | 4030007120 | S.CER C1608 CH 1H 820J-T | B | 81.4/46.2 |
| C674 | 4030007080 | S.CER C1608 CH 1H 390J-T | B | 78.9/41.5 |
| C675 | 4030007070 | S.CER C1608 CH 1H 330J-T | B | 77.1/41.5 |
| C676 | 4030007050 | S.CER C1608 CH 1H 220J-T | B | 81.4/37.1 |
| C677 | 4030007130 | S.CER C1608 CH 1H 101J-T | B | 81.4/39 |
| C678 | 4030007170 | S.CER C1608 CH 1H 221J-T | B | 84.2/34.5 |
| C679 | 4030011600 | S.CER C1608 JB 1E 104K-T | B | 84.2/37.8 |
| C680 | 4030007170 | S.CER C1608 CH 1H 221J-T | B | 86/34.5 |
| C681 | 4030007170 | S.CER C1608 CH 1H 221J-T | T | 34.3/50.7 |
| C682 | 4030007110 | S.CER C1608 CH 1H 680J-T | T | 35.6/50.7 |
| C683 | 4030011600 | S.CER C1608 JB 1E 104K-T | T | 35.6/47.9 |
| C684 | 4030007090 | S.CER C1608 CH 1H 470J-T | T | 38.3/47.1 |
| C685 | 4030007090 | S.CER C1608 CH 1H 470J-T | T | 38.3/45.8 |
| C686 | 4030007070 | S.CER C1608 CH 1H 330J-T | T | 40.4/46.4 |
| C687 | 4030007070 | S.CER C1608 CH 1H 330J-T | T | 41.7/46.4 |
| C688 | 4030007010 | S.CER C1608 CH 1H 100D-T | T | 36.1/43.5 |
| C689 | 4030007120 | S.CER C1608 CH 1H 820J-T | T | 37.4/43.5 |
| C690 | 4030007070 | S.CER C1608 CH 1H 330J-T | T | 41.7/40.5 |
| C691 | 4030007070 | S.CER C1608 CH 1H 330J-T | T | 40.4/40.5 |
| C692 | 4030007090 | S.CER C1608 CH 1H 470J-T | T | 37.8/41 |
| C693 | 4030007090 | S.CER C1608 CH 1H 470J-T | T | 37.8/39.7 |
| C694 | 4030007110 | S.CER C1608 CH 1H 680J-T | T | 34.3/36.2 |
| C695 | 4030011600 | S.CER C1608 JB 1E 104K-T | T | 35.6/39 |
| C696 | 4030007050 | S.CER C1608 CH 1H 220J-T | T | 35.6/36.2 |
| C697 | 4030007160 | S.CER C1608 CH 1H 181J-T | T | 44/51.4 |
| C698 | 4030007090 | S.CER C1608 CH 1H 470J-T | T | 44/50.1 |
| C699 | 4030011600 | S.CER C1608 JB 1E 104K-T | T | 44.6/47.9 |
| C700 | 4030007090 | S.CER C1608 CH 1H 470J-T | T | 46.8/47.1 |
| C701 | 4030007040 | S.CER C1608 CH 1H 180J-T | T | 46.8/45.8 |
| C702 | 4030007030 | S.CER C1608 CH 1H 150J-T | T | 49.3/46.4 |
| C703 | 4030007050 | S.CER C1608 CH 1H 220J-T | T | 50.7/46.4 |
| C704 | 4030006990 | S.CER C1608 CH 1H 080D-T | T | 46.4/43.5 |
| C705 | 4030007090 | S.CER C1608 CH 1H 470J-T | T | 45.1/43.5 |
| C706 | 4030007030 | S.CER C1608 CH 1H 150J-T | T | 49.3/40.5 |
| C707 | 4030007050 | S.CER C1608 CH 1H 220J-T | T | 50.7/40.5 |
| C708 | 4030007040 | S.CER C1608 CH 1H 180J-T | T | 46.8/41 |
| C709 | 4030007090 | S.CER C1608 CH 1H 470J-T | T | 46.8/39.7 |
| C710 | 4030007090 | S.CER C1608 CH 1H 470J-T | T | 43.3/36.2 |
| C711 | 4030011600 | S.CER C1608 JB 1E 104K-T | T | 44.6/39 |
| C712 | 4030007160 | S.CER C1608 CH 1H 181J-T | T | 44.6/36.2 |
| C713 | 4030007140 | S.CER C1608 CH 1H 121J-T | T | 53.6/50.7 |
| C714 | 4030007040 | S.CER C1608 CH 1H 180J-T | T | 52.3/50.7 |
| C715 | 4030011600 | S.CER C1608 JB 1E 104K-T | T | 53.6/47.9 |
| C716 | 4030007070 | S.CER C1608 CH 1H 330J-T | T | 55.8/47.1 |
| C717 | 4030007040 | S.CER C1608 CH 1H 180J-T | T | 55.8/45.8 |
| C718 | 4030007010 | S.CER C1608 CH 1H 100D-T | T | 58.4/46.4 |
| C719 | 4030007070 | S.CER C1608 CH 1H 330J-T | T | 59.7/46.4 |
| C720 | 4030007010 | S.CER C1608 CH 1H 100D-T | T | 54.1/43.5 |
| C721 | 4030007090 | S.CER C1608 CH 1H 470J-T | T | 55.4/43.5 |
| C722 | 4030007010 | S.CER C1608 CH 1H 100D-T | T | 58.4/40.5 |
| C723 | 4030007070 | S.CER C1608 CH 1H 330J-T | T | 59.7/40.5 |
| C724 | 4030007040 | S.CER C1608 CH 1H 180J-T | T | 55.8/41 |
| C725 | 4030007070 | S.CER C1608 CH 1H 330J-T | T | 55.8/39.7 |
| C726 | 4030007040 | S.CER C1608 CH 1H 180J-T | T | 52.3/36.2 |
| C727 | 4030011600 | S.CER C1608 JB 1E 104K-T | T | 53.6/39 |
| C728 | 4030007140 | S.CER C1608 CH 1H 121J-T | T | 53.6/36.2 |
| C729 | 4030007130 | S.CER C1608 CH 1H 101J-T | T | 62.6/50.7 |
| C730 | 4030007030 | S.CER C1608 CH 1H 150J-T | T | 61.3/50.7 |
| C731 | 4030011600 | S.CER C1608 JB 1E 104K-T | T | 62.6/47.9 |
| C732 | 4030007050 | S.CER C1608 CH 1H 220J-T | T | 64.8/47.1 |
| C733 | 4030007020 | S.CER C1608 CH 1H 120J-T | T | 64.8/45.8 |
| C734 | 4030009500 | S.CER C1608 CH 1H 0R5B-T | T | 67.4/46.4 |
| C735 | 4030007050 | S.CER C1608 CH 1H 220J-T | T | 68.7/46.4 |
| C736 | 4030006980 | S.CER C1608 CH 1H 070D-T | T | 63.1/43.5 |
| C737 | 4030007050 | S.CER C1608 CH 1H 220J-T | T | 64.4/43.5 |
| C738 | 4030009500 | S.CER C1608 CH 1H 0R5B-T | T | 67.4/40.5 |

## [MAIN UNIT]

| REF NO. | ORDER NO. | DESCRIPTION | M. | H/V LOCATION |
|---|---|---|---|---|
| C739 | 4030007050 | S.CER C1608 CH 1H 220J-T | T | 68.7/40.5 |
| C740 | 4030007020 | S.CER C1608 CH 1H 120J-T | T | 64.8/41 |
| C741 | 4030007050 | S.CER C1608 CH 1H 220J-T | T | 64.8/39.7 |
| C742 | 4030007030 | S.CER C1608 CH 1H 150J-T | T | 61.3/36.2 |
| C743 | 4030011600 | S.CER C1608 JB 1E 104K-T | T | 62.6/39 |
| C744 | 4030007130 | S.CER C1608 CH 1H 101J-T | T | 62.6/36.2 |
| C745 | 4030007140 | S.CER C1608 CH 1H 121J-T | T | 73.5/49.6 |
| C747 | 4030011600 | S.CER C1608 JB 1E 104K-T | T | 71.5/48.8 |
| C749 | 4030009550 | S.CER C1608 CH 1H 2R5B-T | T | 75.9/46.2 |
| C750 | 4030011770 | S.CER C1608 CH 1H 060B-T | T | 73.8/46.9 |
| C751 | 4030007010 | S.CER C1608 CH 1H 100D-T | T | 73.8/45.5 |
| C755 | 4030009550 | S.CER C1608 CH 1H 2R5B-T | T | 75.9/41 |
| C756 | 4030011770 | S.CER C1608 CH 1H 060B-T | T | 73.8/40.2 |
| C758 | 4030011600 | S.CER C1608 JB 1E 104K-T | T | 71.5/38.1 |
| C759 | 4030007140 | S.CER C1608 CH 1H 121J-T | T | 73.5/37.3 |
| C760 | 4030011770 | S.CER C1608 CH 1H 060B-T | T | 73.8/48.2 |
| C761 | 4030011770 | S.CER C1608 CH 1H 060B-T | T | 73.8/41.8 |
| C801 | 4030006880 | S.CER C1608 JB 1H 472K-T | T | 37.2/20.6 |
| C802 | 4030011600 | S.CER C1608 JB 1E 104K-T | T | 37.2/27.5 |
| C803 | 4030011600 | S.CER C1608 JB 1E 104K-T | B | 37.2/20.5 |
| C804 | 4030011600 | S.CER C1608 JB 1E 104K-T | T | 46.9/19.9 |
| C805 | 4030011600 | S.CER C1608 JB 1E 104K-T | B | 52/24.6 |
| C806 | 4030006900 | S.CER C1608 JB 1H 103K-T | B | 48.5/23.7 |
| C807 | 4030011600 | S.CER C1608 JB 1E 104K-T | T | 48.5/23.9 |
| C812 | 4030006900 | S.CER C1608 JB 1H 103K-T | B | 86.2/84.7 |
| C813 | 4030006880 | S.CER C1608 JB 1H 472K-T | T | 31.2/27.5 |
| C814 | 4030012600 | S.CER C2012 JB 1A 105M-T | T | 27.7/25.5 |
| C815 | 4030006990 | S.CER C1608 CH 1H 080D-T | B | 44.3/21 |
| C816 | 4030012600 | S.CER C2012 JB 1A 105M-T | T | 30.9/29 |
| C817 | 4030011330 | S.CER C1608 CH 1H 391J-T | T | 85.2/55.1 |
| C818 | 4030017810 | S.CER C1608 CH 1H 102J-T | T | 83.2/53.2 |
| C819 | 4030009920 | S.CER C1608 CH 1H 050B-T | T | 83.2/55.8 |
| C820 | 4030006900 | S.CER C1608 JB 1H 103K-T | T | 74.6/62.1 |
| C821 | 4030011600 | S.CER C1608 JB 1E 104K-T | T | 87.4/62.8 |
| C822 | 4030011600 | S.CER C1608 JB 1E 104K-T | T | 78.3/58.6 |
| C823 | 4030012600 | S.CER C2012 JB 1A 105M-T | T | 86.2/51.5 |
| C824 | 4030006900 | S.CER C1608 JB 1H 103K-T | T | 83.6/49.8 |
| C825 | 4030008880 | S.CER C1608 JB 1H 223K-T | T | 84.4/47.8 |
| C826 | 4030008850 | S.CER C1608 JB 1H 123K-T | T | 82.3/46.8 |
| C827 | 4030008850 | S.CER C1608 JB 1H 123K-T | T | 82.3/45.5 |
| C828 | 4030006900 | S.CER C1608 JB 1H 103K-T | T | 85.7/42.7 |
| C829 | 4030008860 | S.CER C1608 JB 1H 153K-T | T | 82.3/42.7 |
| C830 | 4030008860 | S.CER C1608 JB 1H 153K-T | T | 82.3/41.4 |
| C831 | 4030008650 | S.CER C1608 JB 1H 332K-T | T | 84.4/39.8 |
| C832 | 4030006900 | S.CER C1608 JB 1H 103K-T | T | 82.3/39.6 |
| C833 | 4030006900 | S.CER C1608 JB 1H 103K-T | T | 82.3/38.3 |
| C834 | 4030012600 | S.CER C2012 JB 1A 105M-T | T | 82.1/35.4 |
| C835 | 4030011600 | S.CER C1608 JB 1E 104K-T | T | 82.3/37 |
| C836 | 4030009920 | S.CER C1608 CH 1H 050B-T | T | 89.5/57.9 |
| C837 | 4550006470 | S.TAN TEESVB2 1D 106M8R | T | 72.9/58.7 |
| C838 | 4550006470 | S.TAN TEESVB2 1D 106M8R | T | 91.8/61.6 |
| C839 | 4030006880 | S.CER C1608 JB 1H 472K-T | B | 85.3/74.2 |
| C840 | 4030011600 | S.CER C1608 JB 1E 104K-T | B | 86/81.4 |
| C841 | 4030006880 | S.CER C1608 JB 1H 472K-T | B | 81.2/78.3 |
| C845 | 4030011600 | S.CER C1608 JB 1E 104K-T | T | 35.3/69.8 |
| C846 | 4030011600 | S.CER C1608 JB 1E 104K-T | T | 38.1/74.7 |
| C847 | 4510008540 | S.ELE EEE1CA100SR | T | 37.1/77.8 |
| C901 | 4030006880 | S.CER C1608 JB 1H 472K-T | B | 125.2/1.8 |
| C902 | 4030006880 | S.CER C1608 JB 1H 472K-T | T | 124.2/1.8 |
| C903 | 4030006880 | S.CER C1608 JB 1H 472K-T | B | 123.2/1.8 |
| C904 | 4030006880 | S.CER C1608 JB 1H 472K-T | T | 122.2/1.8 |
| C905 | 4030006880 | S.CER C1608 JB 1H 472K-T | B | 121.2/1.8 |
| C906 | 4030006880 | S.CER C1608 JB 1H 472K-T | T | 120.2/1.8 |
| C907 | 4030006880 | S.CER C1608 JB 1H 472K-T | B | 119.2/1.8 |
| C908 | 4030006880 | S.CER C1608 JB 1H 472K-T | T | 118.2/1.8 |
| C909 | 4030006880 | S.CER C1608 JB 1H 472K-T | B | 117.2/1.8 |
| C922 | 4030006880 | S.CER C1608 JB 1H 472K-T | T | 123.7/18.9 |
| C923 | 4030006880 | S.CER C1608 JB 1H 472K-T | B | 122.7/19.4 |
| C924 | 4030006880 | S.CER C1608 JB 1H 472K-T | T | 121.7/18.9 |
| C925 | 4030006880 | S.CER C1608 JB 1H 472K-T | B | 120.7/19.4 |
| C926 | 4030006880 | S.CER C1608 JB 1H 472K-T | T | 119.7/18.9 |
| C927 | 4030006880 | S.CER C1608 JB 1H 472K-T | B | 118.7/19.4 |
| C928 | 4030006880 | S.CER C1608 JB 1H 472K-T | T | 117.7/18.9 |
| C929 | 4030006880 | S.CER C1608 JB 1H 472K-T | B | 116.7/19.4 |
| C930 | 4030006880 | S.CER C1608 JB 1H 472K-T | T | 115.7/18.9 |
| C932 | 4030006880 | S.CER C1608 JB 1H 472K-T | T | 113.7/18.9 |
| C933 | 4030006880 | S.CER C1608 JB 1H 472K-T | B | 112.7/19.4 |
| C934 | 4030006880 | S.CER C1608 JB 1H 472K-T | T | 111.7/18.9 |
| C936 | 4030006880 | S.CER C1608 JB 1H 472K-T | T | 109.7/18.9 |
| C937 | 4030006880 | S.CER C1608 JB 1H 472K-T | B | 108.7/19.4 |
| C945 | 4030006880 | S.CER C1608 JB 1H 472K-T | B | 89.3/1.8 |
| C946 | 4030006880 | S.CER C1608 JB 1H 472K-T | T | 88.3/1.8 |
| C947 | 4030006880 | S.CER C1608 JB 1H 472K-T | B | 87.3/1.8 |
| C948 | 4030006880 | S.CER C1608 JB 1H 472K-T | T | 86.3/1.8 |
| C952 | 4030006880 | S.CER C1608 JB 1H 472K-T | T | 82.3/1.8 |
| C953 | 4030006880 | S.CER C1608 JB 1H 472K-T | B | 81.3/1.8 |
| C954 | 4030006880 | S.CER C1608 JB 1H 472K-T | T | 80.3/1.8 |
| C955 | 4030006880 | S.CER C1608 JB 1H 472K-T | B | 79.3/1.8 |
| C957 | 4030006880 | S.CER C1608 JB 1H 472K-T | B | 77.3/1.8 |
| C958 | 4030006880 | S.CER C1608 JB 1H 472K-T | T | 76.3/1.9 |
| C974 | 4030006880 | S.CER C1608 JB 1H 472K-T | T | 79.8/19.4 |
| C975 | 4030006880 | S.CER C1608 JB 1H 472K-T | B | 78.8/19.3 |
| C976 | 4030006880 | S.CER C1608 JB 1H 472K-T | T | 77.8/19.4 |
| C977 | 4030006880 | S.CER C1608 JB 1H 472K-T | B | 76.8/19.3 |
| C978 | 4030006880 | S.CER C1608 JB 1H 472K-T | T | 75.8/19.4 |
| C979 | 4030006880 | S.CER C1608 JB 1H 472K-T | B | 74.8/19.3 |
| C980 | 4030006880 | S.CER C1608 JB 1H 472K-T | T | 12.8/30 |
| C981 | 4030006880 | S.CER C1608 JB 1H 472K-T | T | 126.2/1.8 |
| RL50 | 6330000540 | RLY 2-1419131-2 (OMR-109F) | | |
| RL140 | 6330001430 | RLY NA-12W-K | | |
| RL141 | 6330001430 | RLY NA-12W-K | | |

M.=Mounted side (T: Mounted on the Top side, B: Mounted on the Bottom side)
S.=Surface mount

## [MAIN UNIT]

| REF NO. | ORDER NO. | DESCRIPTION | | M. | H/V LOCATION |
|---|---|---|---|---|---|
| CP81 | 6910009670 | S.CHK | HK3-S-T | T | 129.3/16.1 |
| CP82 | 6910009670 | S.CHK | HK3-S-T | T | 116.4/75.1 |
| CP495 | 6910009670 | S.CHK | HK3-S-T | T | 129.1/5.8 |
| CP496 | 6910009670 | S.CHK | HK3-S-T | T | 107.1/5.8 |
| J1 | 6510023671 | CNR | TCS4480-0141577 | | |
| J2 | 6510023661 | CNR | TCS4470-0141577 | | |
| J3 | 6510023671 | CNR | TCS4480-0141577 | | |
| J4 | 6510023661 | CNR | TCS4470-0141577 | | |
| J5 | 6450001130 | CNR | JPJ2042-01-110 | | |
| J6 | 6510023730 | CNR | LGY6502-0600C | | |
| J7 | 6510023730 | CNR | LGY6502-0600C | | |
| J8 | 6510023740 | CNR | LGR4609-7000 | | |
| J9 | 6510024940 | CNR | HEC2305-016250 | | |
| J140 | 6510023720 | CNR | LGY6501-0600C | | |
| J141 | 6510023720 | CNR | LGY6501-0600C | | |
| J142 | 6510018961 | S.CNR | B2B-PH-SM4-TB (LF) (SN) | T | 256.2/96.5 |
| J340 | 6510022811 | CNR | IMSA-9180B-22B-PT1 | | |
| J341 | 6510021651 | CNR | IMSA-9180B-30B-PT1 | | |
| J360 | 6510022811 | CNR | IMSA-9180B-22B-PT1 | | |
| J361 | 6510021651 | CNR | IMSA-9180B-30B-PT1 | | |
| J380 | 6510022811 | CNR | IMSA-9180B-22B-PT1 | | |
| J381 | 6510021651 | CNR | IMSA-9180B-30B-PT1 | | |
| J399 | 6510007020 | CNR | TMP-J01X-V6 | | |
| J400 | 6510019981 | S.CNR | 52808-1671 (1690) | T | 232.7/5 |
| J401 | 6510022191 | S.CNR | B3B-PH-SM4-TB (LF) (SN) | T | 232.7/98.9 |
| J403 | 6510019981 | S.CNR | 52808-1671 (1690) | T | 32.5/5 |
| J404 | 6510022191 | S.CNR | B3B-PH-SM4-TB (LF) (SN) | T | 143.8/115.4 |
| J410 | 6510020001 | S.CNR | 52808-3071 (3090) | T | 5.5/42.5 |
| J411 | 6510019971 | S.CNR | 52808-1071 | T | 5.6/98.7 |
| J430 | 6510022311 | S.CNR | B5B-PH-SM4-TB (LF) (SN) | T | 5/72.9 |
| J440 | 6510018921 | S.CNR | B8B-PH-SM4-TB (LF) (SN) | T | 154.5/5 |
| J450 | 6510003471 | CNR | B11B-EH-S (LF) (SN) | | |
| J451 | 6510018941 | S.CNR | B13B-PH-SM4-TB (LF) (SN) | T | 184.2/5 |
| J490 | 6510023750 | CNR | 01K1971-10 | | |
| J491 | 6510007020 | CNR | TMP-J01X-V6 | | |
| J492 | 6510014961 | S.CNR | B2B-ZR-SM4-TF (LF) (SN) | T | 202.6/11.5 |
| J495 | 6510023701 | CNR | TORX178S (F) | | |
| J496 | 6510023711 | CNR | TOTX178S (F) | | |
| J501 | 6510007020 | CNR | TMP-J01X-V6 | | |
| J502 | 6510007020 | CNR | TMP-J01X-V6 | | |
| J503 | 6510007020 | CNR | TMP-J01X-V6 | | |
| J801 | 6510007020 | CNR | TMP-J01X-V6 | | |
| J802 | 6510007020 | CNR | TMP-J01X-V6 | | |
| J808 | 6510007020 | CNR | TMP-J01X-V6 | | |
| J900 | 6510022471 | S.CNR | 40FLT-SM2-TB (LF) (SN) | T | 116.5/10.6 |
| J901 | 6510015541 | S.CNR | B4B-ZR-SM4-TF (LF) (SN) | T | 9.2/113 |
| J940 | 6510022471 | S.CNR | 40FLT-SM2-TB (LF) (SN) | T | 84.6/10.6 |
| F1 | 5220000230 | HOL | S-N5054 #01 | | |
| F2 | 5220000230 | HOL | S-N5054 #01 | | |
| F3 | 5210000041 | FUS | FGB 2A PBF (FGB0 125V) | | |
| W1 | 9024801019 | JMP | 74/98/020/X98/X98 | | |
| EP50 | 6910012350 | S.BEA | MMZ1608Y 102BT | B | 78.1/126.8 |
| EP51 | 6910012350 | S.BEA | MMZ1608Y 102BT | B | 95.6/118.7 |
| EP52 | 6910012350 | S.BEA | MMZ1608Y 102BT | B | 90.1/126.1 |
| EP403 | 6910012350 | S.BEA | MMZ1608Y 102BT | T | 233.2/10.4 |
| EP404 | 6910012350 | S.BEA | MMZ1608Y 102BT | T | 231.9/10.4 |
| EP408 | 6910012350 | S.BEA | MMZ1608Y 102BT | T | 32.1/10 |
| EP409 | 6910012350 | S.BEA | MMZ1608Y 102BT | T | 30.8/10 |
| EP414 | 6910012350 | S.BEA | MMZ1608Y 102BT | T | 9.9/34 |
| EP415 | 6910012350 | S.BEA | MMZ1608Y 102BT | B | 9.9/31 |
| EP416 | 6910012350 | S.BEA | MMZ1608Y 102BT | B | 10.2/95 |
| EP417 | 6910012350 | S.BEA | MMZ1608Y 102BT | T | 10.2/96.2 |
| EP420 | 6910012350 | S.BEA | MMZ1608Y 102BT | B | 10.1/101.2 |
| EP421 | 6910012350 | S.BEA | MMZ1608Y 102BT | T | 10.1/102.2 |
| EP430 | 6910012350 | S.BEA | MMZ1608Y 102BT | B | 5.8/68.9 |
| EP431 | 6910012350 | S.BEA | MMZ1608Y 102BT | B | 5.8/70.9 |
| EP432 | 6910012350 | S.BEA | MMZ1608Y 102BT | B | 5.8/72.9 |
| EP501 | 9088000010 | TUB | IRRAX 1.5 (d) L=12 mm | | |
| EP905 | 6910012350 | S.BEA | MMZ1608Y 102BT | B | 121.2/5.8 |
| EP907 | 6910012350 | S.BEA | MMZ1608Y 102BT | B | 119.2/5.8 |

## [DSP-A UNIT]

| REF NO. | ORDER NO. | DESCRIPTION | | M. | H/V LOCATION |
|---|---|---|---|---|---|
| IC1 | 1140012211 | S.IC | TMS320C6713BZDP225 | T | 28.1/20.4 |
| IC151 | 1130008361 | S.IC | TC7SHU04FU (TE85L,JF) | B | 45.5/8.1 |
| IC171 | 1130008041 | S.IC | TC7SH04FU (TE85L,JF) | T | 41.3/4.6 |
| IC181 | 1130011150 | S.IC | SN74AHC2G08HDCTR | T | 30.2/1.9 |
| IC191 | 1130011150 | S.IC | SN74AHC2G08HDCTR | T | 24/3.5 |
| IC201 | 1130013492 | S.IC | AT29LV040A-15TU | B | 29/42 |
| IC203 | 1110006411 | S.IC | R3111N111A-TR-F | T | 30/36.5 |
| IC301 | 1110006100 | S.IC | NJM5534MD-TE1 | T | 72.3/44.7 |
| IC331 | 1130009981 | S.IC | TC7W53FK (TE85L,F) | T | 76.9/34.1 |
| IC341 | 1110006100 | S.IC | NJM5534MD-TE1 | T | 70.3/35.5 |
| IC371 | 1110006100 | S.IC | NJM5534MD-TE1 | T | 59.4/44.3 |
| IC401 | 1110006111 | S.IC | AK5394AVSP/P | T | 54.2/31 |
| IC451 | 1130006891 | S.IC | TC7S04FU (TE85R,F) | T | 43.5/41 |
| IC452 | 1130012160 | S.IC | SN74LVC1GU04DCKR | T | 42.8/38.5 |
| IC501 | 1110001901 | S.IC | uPC4570G2-E1-A | T | 71.6/27.4 |
| IC551 | 1130013090 | S.IC | AK4396VFP-E2/P | T | 54.6/7.3 |
| IC601 | 1110006100 | S.IC | NJM5534MD-TE1 | T | 63.6/17.3 |
| IC651 | 1110006100 | S.IC | NJM5534MD-TE1 | T | 66.8/7.2 |
| IC701 | 1110006100 | S.IC | NJM5534MD-TE1 | T | 74.1/17.5 |
| IC771 | 1110004770 | S.IC | BU9480F-E2 | T | 51.7/18.4 |
| Q1 | 1590000680 | S.TR | DTC114EUA T106 | T | 45.7/16.5 |
| D501 | 1730002320 | S.ZEN | MA8051-M (TX) | B | 76.5/29.5 |
| FI101 | 2040000790 | S.LC | EXCCET103U | T | 36.5/2.8 |
| X151 | 6050011660 | S.XTL | CR-754 (30.000 MHz) | B | 40.5/2.9 |
| L1 | 6200003950 | S.COL | HF50ACC 322513-T | B | 43.2/34.8 |
| L2 | 6180003501 | S.COL | SLF6028T-100M1R3-PF | B | 13.6/35.7 |
| L3 | 6200003640 | S.COL | MLF1608E 100K-T | B | 12.2/8.2 |
| L401 | 6200003950 | S.COL | HF50ACC 322513-T | T | 49.3/42.9 |
| L921 | 6200003950 | S.COL | HF50ACC 322513-T | T | 73.7/4.4 |
| L922 | 6200003950 | S.COL | HF50ACC 322513-T | T | 77.9/9.5 |
| L924 | 6200003950 | S.COL | HF50ACC 322513-T | T | 74.1/9.5 |
| L925 | 6200003950 | S.COL | HF50ACC 322513-T | T | 77.5/4.4 |
| L961 | 6200003950 | S.COL | HF50ACC 322513-T | B | 11.3/12.2 |
| L962 | 6200003950 | S.COL | HF50ACC 322513-T | B | 12.8/24.6 |
| R1 | 7030003560 | S.RES | ERJ3GEYJ 103 V (10 k) | B | 42.5/22.3 |
| R2 | 7030003560 | S.RES | ERJ3GEYJ 103 V (10 k) | B | 41.8/24.2 |
| R3 | 7030003560 | S.RES | ERJ3GEYJ 103 V (10 k) | B | 42.5/21 |
| R4 | 7030003560 | S.RES | ERJ3GEYJ 103 V (10 k) | B | 41.8/13.7 |
| R5 | 7030003440 | S.RES | ERJ3GEYJ 102 V (1 k) | B | 23.2/6 |
| R6 | 7030003440 | S.RES | ERJ3GEYJ 102 V (1 k) | B | 21.9/6 |
| R7 | 7030003640 | S.RES | ERJ3GEYJ 473 V (47 k) | B | 20/6.7 |
| R8 | 7030003440 | S.RES | ERJ3GEYJ 102 V (1 k) | B | 14.1/8.2 |
| R9 | 7030003640 | S.RES | ERJ3GEYJ 473 V (47 k) | B | 14.5/11.6 |
| R10 | 7030003640 | S.RES | ERJ3GEYJ 473 V (47 k) | T | 43.8/13.1 |
| R11 | 7030003460 | S.RES | ERJ3GEYJ 152 V (1.5 k) | B | 48.2/9.7 |
| R12 | 7030003560 | S.RES | ERJ3GEYJ 103 V (10 k) | B | 26.8/13.3 |
| R151 | 7030003320 | S.RES | ERJ3GEYJ 101 V (100) | T | 44.3/5.3 |
| R152 | 7030003800 | S.RES | ERJ3GEYJ 105 V (1 M) | B | 43.5/6.2 |
| R171 | 7030003320 | S.RES | ERJ3GEYJ 101 V (100) | T | 41.3/1.4 |
| R181 | 7030003560 | S.RES | ERJ3GEYJ 103 V (10 k) | T | 9.1/7 |
| R182 | 7030003560 | S.RES | ERJ3GEYJ 103 V (10 k) | T | 6.3/7 |
| R183 | 7030003560 | S.RES | ERJ3GEYJ 103 V (10 k) | T | 11.9/8.3 |
| R184 | 7030003560 | S.RES | ERJ3GEYJ 103 V (10 k) | T | 11.9/7 |
| R201 | 7030003860 | S.RES | ERJ3GE JPW V | T | 30.8/39.2 |
| R301 | 7030003860 | S.RES | ERJ3GE JPW V | T | 79.5/38.4 |
| R302 | 7030009591 | S.RES | ERA3YED 472V (4.7 k) | T | 77.6/46.9 |
| R303 | 7030009591 | S.RES | ERA3YED 472V (4.7 k) | T | 75.7/46.1 |
| R304 | 7030003320 | S.RES | ERJ3GEYJ 101 V (100) | T | 78.1/40.7 |
| R305 | 7030003860 | S.RES | ERJ3GE JPW V | T | 75.7/43.5 |
| R306 | 7030003320 | S.RES | ERJ3GEYJ 101 V (100) | T | 68.9/46.1 |
| R331 | 7030003500 | S.RES | ERJ3GEYJ 332 V (3.3 k) | T | 64.4/39.9 |
| R332 | 7030003480 | S.RES | ERJ3GEYJ 222 V (2.2 k) | T | 65.7/39.9 |
| R333 | 7030003640 | S.RES | ERJ3GEYJ 473 V (47 k) | T | 75/33.2 |
| R341 | 7030003320 | S.RES | ERJ3GEYJ 101 V (100) | T | 73.7/34.8 |
| R342 | 7030003320 | S.RES | ERJ3GEYJ 101 V (100) | T | 66.9/37.3 |
| R343 | 7030006601 | S.RES | ERA3YED 272V (2.7 k) | T | 73.7/37.4 |
| R344 | 7030010390 | S.RES | ERA3YED 821V (820) | T | 65.6/33.6 |
| R345 | 7030009691 | S.RES | ERA3YED 101V (100) | T | 66.2/31.7 |
| R371 | 7030003320 | S.RES | ERJ3GEYJ 101 V (100) | T | 63.4/43.8 |
| R372 | 7030003320 | S.RES | ERJ3GEYJ 101 V (100) | T | 55.3/46.3 |
| R373 | 7030006601 | S.RES | ERA3YED 272V (2.7 k) | T | 63.4/45.6 |
| R374 | 7030010390 | S.RES | ERA3YED 821V (820) | T | 54.7/41.8 |
| R375 | 7030009691 | S.RES | ERA3YED 101V (100) | T | 56/40.5 |
| R401 | 7030009591 | S.RES | ERA3YED 472V (4.7 k) | T | 53.1/42.5 |
| R402 | 7030009591 | S.RES | ERA3YED 472V (4.7 k) | T | 51.8/44 |
| R403 | 7030003640 | S.RES | ERJ3GEYJ 473 V (47 k) | T | 54.1/38.7 |
| R404 | 7030003200 | S.RES | ERJ3GEYJ 100 V (10) | T | 50/40 |
| R405 | 7030003320 | S.RES | ERJ3GEYJ 101 V (100) | T | 51.1/38.1 |
| R406 | 7030003640 | S.RES | ERJ3GEYJ 473 V (47 k) | T | 49.8/38.1 |
| R407 | 7030003460 | S.RES | ERJ3GEYJ 152 V (1.5 k) | B | 46.8/36 |
| R409 | 7030003640 | S.RES | ERJ3GEYJ 473 V (47 k) | T | 52.3/23.8 |
| R410 | 7030003640 | S.RES | ERJ3GEYJ 473 V (47 k) | T | 47.2/23.8 |
| R411 | 7030003640 | S.RES | ERJ3GEYJ 473 V (47 k) | T | 49.8/23.8 |
| R412 | 7030003520 | S.RES | ERJ3GEYJ 472 V (4.7 k) | T | 56/22.3 |
| R413 | 7030003520 | S.RES | ERJ3GEYJ 472 V (4.7 k) | T | 54.1/21.9 |
| R451 | 7030003800 | S.RES | ERJ3GEYJ 105 V (1 M) | T | 42.6/36.6 |
| R501 | 7030006521 | S.RES | ERA3YED 561V (560) | T | 76.1/29.9 |
| R502 | 7030003360 | S.RES | ERJ3GEYJ 221 V (220) | T | 70.3/23.4 |
| R503 | 7030003380 | S.RES | ERJ3GEYJ 331 V (330) | T | 65.3/28.9 |
| R504 | 7030003680 | S.RES | ERJ3GEYJ 104 V (100 k) | T | 65.3/27.6 |
| R551 | 7030003320 | S.RES | ERJ3GEYJ 101 V (100) | T | 49.5/8.6 |
| R559 | 7030003640 | S.RES | ERJ3GEYJ 473 V (47 k) | T | 59.8/10.5 |

M.=Mounted side (T: Mounted on the Top side, B: Mounted on the Bottom side)
S.=Surface mount

## [DSP-A BOARD]

| REF NO. | ORDER NO. | DESCRIPTION | M. | H/V LOCATION |
|---|---|---|---|---|
| R601 | 7030006521 | S.RES ERA3YED 561V (560) | T | 63.1/20.7 |
| R602 | 7030007661 | S.RES ERA3YED 331V (330) | T | 64/22 |
| R603 | 7030007661 | S.RES ERA3YED 331V (330) | T | 59/19.8 |
| R604 | 7030009961 | S.RES ERA3YED 221V (220) | T | 68.7/21 |
| R605 | 7030007661 | S.RES ERA3YED 331V (330) | T | 65.7/20.7 |
| R606 | 7030003320 | S.RES ERJ3GEYJ 101 V (100) | T | 67.1/13.9 |
| R607 | 7030003320 | S.RES ERJ3GEYJ 101 V (100) | T | 61.9/13.9 |
| R651 | 7030006521 | S.RES ERA3YED 561V (560) | T | 64.3/10.6 |
| R652 | 7030007661 | S.RES ERA3YED 331V (330) | T | 65.3/11.9 |
| R653 | 7030007661 | S.RES ERA3YED 331V (330) | T | 62.1/10.1 |
| R654 | 7030009961 | S.RES ERA3YED 221V (220) | T | 69.5/10.6 |
| R655 | 7030007661 | S.RES ERA3YED 331V (330) | T | 66.9/10.6 |
| R658 | 7030003320 | S.RES ERJ3GEYJ 101 V (100) | T | 67.7/3.8 |
| R659 | 7030003320 | S.RES ERJ3GEYJ 101 V (100) | T | 64/3.8 |
| R701 | 7030010770 | S.RES ERA3YED 681V (680) | T | 71.3/21 |
| R702 | 7030009861 | S.RES ERA3YED 471V (470) | T | 74.8/22.7 |
| R703 | 7030010770 | S.RES ERA3YED 681V (680) | T | 70.5/13.5 |
| R704 | 7030009861 | S.RES ERA3YED 471V (470) | T | 77.2/13.3 |
| R705 | 7030009691 | S.RES ERA3YED 101V (100) | T | 77.4/22.2 |
| R706 | 7030003320 | S.RES ERJ3GEYJ 101 V (100) | T | 77.3/20.9 |
| R707 | 7030003320 | S.RES ERJ3GEYJ 101 V (100) | T | 74.1/14.1 |
| R801 | 7030003650 | S.RES ERJ3GEYJ 563 V (56 k) | T | 78/27.2 |
| R802 | 7030003680 | S.RES ERJ3GEYJ 104 V (100 k) | T | 78/25.9 |
| R803 | 7030003480 | S.RES ERJ3GEYJ 222 V (2.2 k) | T | 78.7/24 |
| R804 | 7030003490 | S.RES ERJ3GEYJ 272 V (2.7 k) | T | 78/29.8 |
| R805 | 7030003340 | S.RES ERJ3GEYJ 151 V (150) | T | 78/28.5 |
| R901 | 7030003860 | S.RES ERJ3GE JPW V | T | 46.6/21 |
| R962 | 7030003320 | S.RES ERJ3GEYJ 101 V (100) | T | 12.1/16.8 |
| R963 | 7030003320 | S.RES ERJ3GEYJ 101 V (100) | T | 11.9/15.5 |
| R964 | 7030003320 | S.RES ERJ3GEYJ 101 V (100) | T | 11.9/14.2 |
| R965 | 7030003320 | S.RES ERJ3GEYJ 101 V (100) | T | 11.9/12.9 |
| R967 | 7030003320 | S.RES ERJ3GEYJ 101 V (100) | T | 13.6/37.8 |
| R968 | 7030003320 | S.RES ERJ3GEYJ 101 V (100) | T | 11.9/11.6 |
| R969 | 7030003320 | S.RES ERJ3GEYJ 101 V (100) | T | 13.6/48.2 |
| R970 | 7030003320 | S.RES ERJ3GEYJ 101 V (100) | T | 13.6/46.9 |
| R971 | 7030003320 | S.RES ERJ3GEYJ 101 V (100) | T | 13.6/45.6 |
| R972 | 7030003320 | S.RES ERJ3GEYJ 101 V (100) | T | 13.6/44.3 |
| R973 | 7030003320 | S.RES ERJ3GEYJ 101 V (100) | T | 13.6/43 |
| R974 | 7030003320 | S.RES ERJ3GEYJ 101 V (100) | T | 13.6/41.7 |
| R975 | 7030003320 | S.RES ERJ3GEYJ 101 V (100) | T | 13.6/40.4 |
| R976 | 7030003320 | S.RES ERJ3GEYJ 101 V (100) | T | 13.6/39.1 |
| | | | | |
| C1 | 4030011600 | S.CER C1608 JB 1E 104K-T | B | 15.2/30.5 |
| C2 | 4030011600 | S.CER C1608 JB 1E 104K-T | B | 41.8/30.7 |
| C3 | 4030011600 | S.CER C1608 JB 1E 104K-T | B | 18/32.9 |
| C4 | 4030011600 | S.CER C1608 JB 1E 104K-T | B | 39.4/32.9 |
| C5 | 4030011600 | S.CER C1608 JB 1E 104K-T | B | 23/26.3 |
| C6 | 4030011600 | S.CER C1608 JB 1E 104K-T | B | 24.3/26.3 |
| C7 | 4030011600 | S.CER C1608 JB 1E 104K-T | B | 28.6/26.3 |
| C8 | 4030011600 | S.CER C1608 JB 1E 104K-T | B | 29.9/26.3 |
| C9 | 4030011600 | S.CER C1608 JB 1E 104K-T | B | 33.8/26.3 |
| C10 | 4030011600 | S.CER C1608 JB 1E 104K-T | B | 21.5/23.3 |
| C11 | 4030011600 | S.CER C1608 JB 1E 104K-T | B | 36/23.7 |
| C12 | 4030011600 | S.CER C1608 JB 1E 104K-T | T | 13.7/21 |
| C13 | 4030011600 | S.CER C1608 JB 1E 104K-T | B | 22.2/20.2 |
| C14 | 4030011600 | S.CER C1608 JB 1E 104K-T | B | 36/21.1 |
| C15 | 4030011600 | S.CER C1608 JB 1E 104K-T | B | 22.2/18.9 |
| C16 | 4030011600 | S.CER C1608 JB 1E 104K-T | B | 36/18.5 |
| C17 | 4030011600 | S.CER C1608 JB 1E 104K-T | T | 43.5/20 |
| C18 | 4030011600 | S.CER C1608 JB 1E 104K-T | B | 22.2/15.2 |
| C19 | 4030011600 | S.CER C1608 JB 1E 104K-T | B | 34.7/14.4 |
| C20 | 4030011600 | S.CER C1608 JB 1E 104K-T | B | 23.1/13.3 |
| C21 | 4030011600 | S.CER C1608 JB 1E 104K-T | B | 24.4/13.3 |
| C22 | 4030011600 | S.CER C1608 JB 1E 104K-T | B | 28.1/13.3 |
| C23 | 4030011600 | S.CER C1608 JB 1E 104K-T | B | 32.6/12.6 |
| C24 | 4030011600 | S.CER C1608 JB 1E 104K-T | B | 35.2/12.6 |
| C25 | 4030011600 | S.CER C1608 JB 1E 104K-T | B | 17.3/6.7 |
| C26 | 4030011600 | S.CER C1608 JB 1E 104K-T | B | 33.1/6.8 |
| C27 | 4030011600 | S.CER C1608 JB 1E 104K-T | B | 41.8/11.1 |
| C28 | 4030011600 | S.CER C1608 JB 1E 104K-T | B | 15.4/8.2 |
| C29 | 4030011600 | S.CER C1608 JB 1E 104K-T | B | 40.9/6.8 |
| C30 | 4030011600 | S.CER C1608 JB 1E 104K-T | T | 35.2/5 |
| C31 | 4030011600 | S.CER C1608 JB 1E 104K-T | T | 28.5/5.2 |
| C32 | 4030011600 | S.CER C1608 JB 1E 104K-T | T | 37.8/5 |
| C33 | 4030011600 | S.CER C1608 JB 1E 104K-T | T | 18.5/35.2 |
| C34 | 4030011600 | S.CER C1608 JB 1E 104K-T | T | 36.4/35 |
| C35 | 4030011600 | S.CER C1608 JB 1E 104K-T | B | 26/32.9 |
| C36 | 4030011600 | S.CER C1608 JB 1E 104K-T | B | 29.3/32.9 |
| C37 | 4030011600 | S.CER C1608 JB 1E 104K-T | B | 36.8/32.9 |
| C38 | 4030011600 | S.CER C1608 JB 1E 104K-T | B | 15.2/27.9 |
| C39 | 4030011600 | S.CER C1608 JB 1E 104K-T | B | 22.4/32.9 |
| C40 | 4030011600 | S.CER C1608 JB 1E 104K-T | B | 26/26.3 |
| C41 | 4030011600 | S.CER C1608 JB 1E 104K-T | B | 21.7/26.3 |
| C42 | 4030011600 | S.CER C1608 JB 1E 104K-T | B | 27.3/26.3 |
| C43 | 4030011600 | S.CER C1608 JB 1E 104K-T | B | 32.5/26.3 |
| C44 | 4030011600 | S.CER C1608 JB 1E 104K-T | B | 35.1/26.3 |
| C45 | 4030011600 | S.CER C1608 JB 1E 104K-T | B | 41.8/26.8 |
| C46 | 4030011600 | S.CER C1608 JB 1E 104K-T | B | 15.3/24.9 |
| C47 | 4030011600 | S.CER C1608 JB 1E 104K-T | T | 43.5/29 |
| C48 | 4030011600 | S.CER C1608 JB 1E 104K-T | B | 22.2/21.5 |
| C49 | 4030011600 | S.CER C1608 JB 1E 104K-T | B | 41.8/17.9 |
| C50 | 4030011600 | S.CER C1608 JB 1E 104K-T | B | 22.2/17.6 |
| C51 | 4030011600 | S.CER C1608 JB 1E 104K-T | B | 36/15.9 |
| C52 | 4030011600 | S.CER C1608 JB 1E 104K-T | B | 15.8/11.6 |
| C53 | 4030011600 | S.CER C1608 JB 1E 104K-T | B | 21.8/13.3 |
| C54 | 4030011600 | S.CER C1608 JB 1E 104K-T | T | 42.9/9.9 |
| C55 | 4030011600 | S.CER C1608 JB 1E 104K-T | B | 29.4/13.3 |
| C56 | 4030011600 | S.CER C1608 JB 1E 104K-T | B | 25/6.7 |
| C57 | 4030011600 | S.CER C1608 JB 1E 104K-T | B | 29.8/6.8 |
| C58 | 4030011600 | S.CER C1608 JB 1E 104K-T | B | 38.3/6.8 |
| C59 | 4030011600 | S.CER C1608 JB 1E 104K-T | T | 20.3/5.3 |
| C60 | 4510007130 | S.ELE EEFCD 0J 470R | T | 19.6/44 |
| C61 | 4550007480 | S.TAN F930J106MAABMA | B | 44.8/29.7 |

## [DSP-A BOARD]

| REF NO. | ORDER NO. | DESCRIPTION | M. | H/V LOCATION |
|---|---|---|---|---|
| C62 | 4510007130 | S.ELE EEFCD 0J 470R | T | 25.7/43.9 |
| C101 | 4030011600 | S.CER C1608 JB 1E 104K-T | B | 35.7/6.8 |
| C151 | 4030011600 | S.CER C1608 JB 1E 104K-T | B | 45.6/10 |
| C152 | 4030007030 | S.CER C1608 CH 1H 150J-T | B | 46.1/6.2 |
| C153 | 4030007030 | S.CER C1608 CH 1H 150J-T | B | 43.1/8 |
| C171 | 4030011600 | S.CER C1608 JB 1E 104K-T | T | 41.3/2.7 |
| C181 | 4030011600 | S.CER C1608 JB 1E 104K-T | T | 31/4.3 |
| C191 | 4030011600 | S.CER C1608 JB 1E 104K-T | T | 22.6/1.2 |
| C201 | 4030011600 | S.CER C1608 JB 1E 104K-T | B | 41.4/43.3 |
| C301 | 4340000250 | S.MLR ECHU 1C 104JX5 | T | 77.9/44 |
| C302 | 4550007500 | S.TAN F931D106MBABMA | B | 76.5/43.7 |
| C303 | 4030011600 | S.CER C1608 JB 1E 104K-T | T | 75.6/40.9 |
| C304 | 4550007500 | S.TAN F931D106MBABMA | B | 71.7/43.7 |
| C305 | 4030011600 | S.CER C1608 JB 1E 104K-T | T | 67.6/46.1 |
| C306 | 4030007050 | S.CER C1608 CH 1H 220J-T | T | 72.4/40.1 |
| C331 | 4030011600 | S.CER C1608 JB 1E 104K-T | T | 78.8/32.8 |
| C332 | 4550007520 | S.TAN F931A106MAABMA | B | 67.9/35.2 |
| C333 | 4030011600 | S.CER C1608 JB 1E 104K-T | T | 79.5/35.8 |
| C341 | 4550007500 | S.TAN F931D106MBABMA | B | 73.1/32.4 |
| C342 | 4030011600 | S.CER C1608 JB 1E 104K-T | T | 73.7/31.6 |
| C343 | 4550007500 | S.TAN F931D106MBABMA | B | 73.2/38.1 |
| C344 | 4030011600 | S.CER C1608 JB 1E 104K-T | T | 65.6/37.3 |
| C345 | 4340000250 | S.MLR ECHU 1C 104JX5 | T | 76.7/38.1 |
| C346 | 4030018580 | S.CER C1608 CH 1H 821J-T | T | 66.9/33.6 |
| C347 | 4030011600 | S.CER C1608 JB 1E 104K-T | T | 66.1/35.5 |
| C348 | 4030007050 | S.CER C1608 CH 1H 220J-T | T | 70.9/30.9 |
| C371 | 4550007500 | S.TAN F931D106MBABMA | B | 59.8/43.8 |
| C372 | 4030011600 | S.CER C1608 JB 1E 104K-T | T | 63.4/42.5 |
| C373 | 4550007500 | S.TAN F931D106MBABMA | B | 50.1/43.9 |
| C374 | 4030011600 | S.CER C1608 JB 1E 104K-T | T | 53.4/45.5 |
| C375 | 4340000250 | S.MLR ECHU 1C 104JX5 | T | 68.1/42.6 |
| C376 | 4030018580 | S.CER C1608 CH 1H 821J-T | T | 56/43.1 |
| C377 | 4030011600 | S.CER C1608 JB 1E 104K-T | T | 55.3/45 |
| C378 | 4030007050 | S.CER C1608 CH 1H 220J-T | T | 59.4/39.5 |
| C401 | 4550007520 | S.TAN F931A106MAABMA | B | 54.9/43.8 |
| C402 | 4030017840 | S.CER C2012 CH 1H 222J-T | T | 58.1/37.6 |
| C403 | 4550007480 | S.TAN F930J106MAABMA | B | 63.1/35.2 |
| C404 | 4030011810 | S.CER C1608 JB 1A 224K-T | T | 61.5/37.4 |
| C405 | 4550007480 | S.TAN F930J106MAABMA | B | 58.3/35.2 |
| C406 | 4030011810 | S.CER C1608 JB 1A 224K-T | T | 63.5/36.7 |
| C407 | 4550007480 | S.TAN F930J106MAABMA | B | 50.4/36.1 |
| C408 | 4030011600 | S.CER C1608 JB 1E 104K-T | T | 54.1/37.4 |
| C409 | 4030011600 | S.CER C1608 JB 1E 104K-T | T | 54.1/23.2 |
| C410 | 4030009000 | S.CER C2012 JB 1C 224K-T | T | 62.1/24.2 |
| C411 | 4550007480 | S.TAN F930J106MAABMA | B | 63.1/28.4 |
| C412 | 4550007480 | S.TAN F930J106MAABMA | B | 58.3/29.1 |
| C413 | 4030009000 | S.CER C2012 JB 1C 224K-T | T | 59/22.5 |
| C414 | 4030011600 | S.CER C1608 JB 1E 104K-T | T | 54.1/24.5 |
| C415 | 4550007520 | S.TAN F931A106MAABMA | B | 53/26.5 |
| C416 | 4550007520 | S.TAN F931A106MAABMA | B | 53/31.3 |
| C417 | 4030017840 | S.CER C2012 CH 1H 222J-T | T | 58/24.2 |
| C450 | 4030011600 | S.CER C1608 JB 1E 104K-T | T | 43.1/35.3 |
| C451 | 4030011600 | S.CER C1608 JB 1E 104K-T | T | 43.6/42.9 |
| C452 | 4030006860 | S.CER C1608 JB 1H 102K-T | T | 40.8/39.6 |
| C501 | 4030011600 | S.CER C1608 JB 1E 104K-T | T | 74.8/24 |
| C502 | 4550007500 | S.TAN F931D106MBABMA | B | 77.5/33.1 |
| C503 | 4030011600 | S.CER C1608 JB 1E 104K-T | T | 71.6/23.4 |
| C504 | 4550007500 | S.TAN F931D106MBABMA | B | 67.9/29.1 |
| C506 | 4030007090 | S.CER C1608 CH 1H 470J-T | T | 67.1/28.4 |
| C507 | 4030007090 | S.CER C1608 CH 1H 470J-T | T | 76.1/27.3 |
| C551 | 4550007520 | S.TAN F931A106MAABMA | B | 50.3/8.7 |
| C552 | 4030011600 | S.CER C1608 JB 1E 104K-T | T | 49.5/5.5 |
| C553 | 4550007520 | S.TAN F931A106MAABMA | B | 55/13.3 |
| C554 | 4030011600 | S.CER C1608 JB 1E 104K-T | T | 60/7.6 |
| C555 | 4030011600 | S.CER C1608 JB 1E 104K-T | T | 59.8/4.6 |
| C556 | 4550007480 | S.TAN F930J106MAABMA | B | 53.6/7.1 |
| C557 | 4030011600 | S.CER C1608 JB 1E 104K-T | T | 60.7/2.8 |
| C558 | 4550007520 | S.TAN F931A106MAABMA | B | 53.6/4.3 |
| C601 | 4550007480 | S.TAN F930J106MAABMA | B | 61.3/17.2 |
| C602 | 4030018510 | S.CER C2012 CH 1H 682J-T | T | 58.8/16.5 |
| C603 | 4550007500 | S.TAN F931D106MBABMA | B | 68.2/15 |
| C604 | 4030011600 | S.CER C1608 JB 1E 104K-T | T | 58.2/14.2 |
| C605 | 4030011600 | S.CER C1608 JB 1E 104K-T | T | 64.5/13.9 |
| C606 | 4550007500 | S.TAN F931D106MBABMA | B | 69.2/19.2 |
| C607 | 4030018510 | S.CER C2012 CH 1H 682J-T | T | 67/22.5 |
| C608 | 4030007050 | S.CER C1608 CH 1H 220J-T | T | 68.3/16.7 |
| C651 | 4550007480 | S.TAN F930J106MAABMA | B | 60.1/9.2 |
| C652 | 4030018510 | S.CER C2012 CH 1H 682J-T | T | 61.9/6.6 |
| C653 | 4550007500 | S.TAN F931D106MBABMA | B | 59.9/2.6 |
| C654 | 4030011600 | S.CER C1608 JB 1E 104K-T | T | 64/2.5 |
| C655 | 4030011600 | S.CER C1608 JB 1E 104K-T | T | 67.7/2.5 |
| C656 | 4550007500 | S.TAN F931D106MBABMA | B | 59.9/6 |
| C657 | 4030018510 | S.CER C2012 CH 1H 682J-T | T | 68.3/12.2 |
| C658 | 4030007050 | S.CER C1608 CH 1H 220J-T | T | 71.4/6.9 |
| C701 | 4030017840 | S.CER C2012 CH 1H 222J-T | T | 74.3/21.1 |
| C702 | 4030017840 | S.CER C2012 CH 1H 222J-T | T | 78.9/13.4 |
| C703 | 4550007500 | S.TAN F931D106MBABMA | B | 75.3/15.7 |
| C704 | 4030011600 | S.CER C1608 JB 1E 104K-T | T | 75.9/12.8 |
| C705 | 4030011600 | S.CER C1608 JB 1E 104K-T | T | 79.4/20.6 |
| C706 | 4550007500 | S.TAN F931D106MBABMA | B | 75.6/21.1 |
| C707 | 4030007050 | S.CER C1608 CH 1H 220J-T | T | 78.7/18 |
| C771 | 4550007480 | S.TAN F930J106MAABMA | B | 49.8/14.1 |
| C772 | 4030011600 | S.CER C1608 JB 1E 104K-T | T | 49.5/15 |
| C773 | 4550007480 | S.TAN F930J106MAABMA | B | 55/18.1 |
| C801 | 4030011600 | S.CER C1608 JB 1E 104K-T | T | 77.4/24 |
| C921 | 4550007510 | S.TAN F931C106MBABMA | B | 66.5/2.6 |
| C922 | 4030011600 | S.CER C1608 JB 1E 104K-T | T | 71/3.6 |
| C923 | 4550002830 | S.TAN TEESVD2 1V 685M12R | B | 78.3/6.5 |
| C924 | 4030011600 | S.CER C1608 JB 1E 104K-T | T | 80.1/8.6 |
| C925 | 4550007510 | S.TAN F931C106MBABMA | B | 67.1/10.5 |
| C926 | 4030011600 | S.CER C1608 JB 1E 104K-T | T | 71.8/12.7 |
| C927 | 4550002830 | S.TAN TEESVD2 1V 685M12R | B | 72.6/6.5 |
| C928 | 4030011600 | S.CER C1608 JB 1E 104K-T | T | 79.6/5.2 |
| C961 | 4030011600 | S.CER C1608 JB 1E 104K-T | B | 11.2/15.7 |
| C962 | 4550007520 | S.TAN F931A106MAABMA | B | 12/18.8 |

M.=Mounted side (T: Mounted on the Top side, B: Mounted on the Bottom side)

S.=Surface mount

## [DSP-A BOARD]

| REF NO. | ORDER NO. | DESCRIPTION | | M. | H/V LOCATION |
|---|---|---|---|---|---|
| C963 | 4030011600 | S.CER | C1608 JB 1E 104K-T | B | 10.7/25.4 |
| C964 | 4550007520 | S.TAN | F931A106MAABMA | B | 11.4/29.4 |
| J921 | 6910013900 | CNR | IMSA-9180S-22A | | |
| J961 | 6910012460 | CNR | IMSA-9180S-30A | | |

## [DSP-B BOARD]

| REF NO. | ORDER NO. | DESCRIPTION | | M. | H/V LOCATION |
|---|---|---|---|---|---|
| IC1 | 1140012211 | S.IC | TMS320C6713BZDP225 | T | 28.1/20.4 |
| IC151 | 1130008361 | S.IC | TC7SHU04FU (TE85L,JF) | B | 45.5/8.1 |
| IC171 | 1130008041 | S.IC | TC7SH04FU (TE85L,JF) | T | 41.3/4.6 |
| IC181 | 1130011150 | S.IC | SN74AHC2G08HDCTR | T | 30.2/1.9 |
| IC191 | 1130011150 | S.IC | SN74AHC2G08HDCTR | T | 24/3.5 |
| IC201 | 1130013492 | S.IC | AT29LV040A-15TU | B | 29/42 |
| IC203 | 1110006411 | S.IC | R3111N111A-TR-F | T | 30/36.5 |
| IC301 | 1110006100 | S.IC | NJM5534MD-TE1 | T | 72.3/44.7 |
| IC331 | 1130009981 | S.IC | TC7W53FK (TE85L,F) | T | 76.9/34.1 |
| IC341 | 1110006100 | S.IC | NJM5534MD-TE1 | T | 70.3/35.5 |
| IC371 | 1110006100 | S.IC | NJM5534MD-TE1 | T | 59.4/44.3 |
| IC401 | 1110006111 | S.IC | AK5394AVSP/P | T | 54.2/31 |
| IC451 | 1130006891 | S.IC | TC7S04FU (TE85R,F) | T | 43.5/41 |
| IC452 | 1130012160 | S.IC | SN74LVC1GU04DCKR | T | 42.8/38.5 |
| IC501 | 1110001901 | S.IC | uPC4570G2-E1-A | T | 71.6/27.4 |
| IC551 | 1130013090 | S.IC | AK4396VFP-E2/P | T | 54.6/7.3 |
| IC601 | 1110006100 | S.IC | NJM5534MD-TE1 | T | 63.6/17.3 |
| IC651 | 1110006100 | S.IC | NJM5534MD-TE1 | T | 66.8/7.2 |
| IC701 | 1110006100 | S.IC | NJM5534MD-TE1 | T | 74.1/17.5 |
| IC771 | 1110004770 | S.IC | BU9480F-E2 | T | 51.7/18.4 |
| Q1 | 1590000680 | S.TR | DTC114EUA T106 | T | 45.7/16.5 |
| D501 | 1730002320 | S.ZEN | MA8051-M (TX) | B | 76.5/29.5 |
| FI101 | 2040000790 | S.LC | EXCCET103U | T | 36.5/2.8 |
| X151 | 6050011660 | S.XTL | CR-754 (30.000 MHz) | B | 40.5/2.9 |
| L1 | 6200003950 | S.COL | HF50ACC 322513-T | B | 43.2/34.8 |
| L2 | 6180003501 | S.COL | SLF6028T-100M1R3-PF | B | 13.6/35.7 |
| L3 | 6200003640 | S.COL | MLF1608E 100K-T | B | 12.2/8.2 |
| L401 | 6200003950 | S.COL | HF50ACC 322513-T | T | 49.3/42.9 |
| L921 | 6200003950 | S.COL | HF50ACC 322513-T | T | 73.7/4.4 |
| L922 | 6200003950 | S.COL | HF50ACC 322513-T | T | 77.9/9.5 |
| L924 | 6200003950 | S.COL | HF50ACC 322513-T | T | 74.1/9.5 |
| L925 | 6200003950 | S.COL | HF50ACC 322513-T | T | 77.5/4.4 |
| L961 | 6200003950 | S.COL | HF50ACC 322513-T | B | 11.3/12.2 |
| L962 | 6200003950 | S.COL | HF50ACC 322513-T | B | 12.8/24.6 |
| R1 | 7030003560 | S.RES | ERJ3GEYJ 103 V (10 k) | B | 42.5/22.3 |
| R2 | 7030003560 | S.RES | ERJ3GEYJ 103 V (10 k) | B | 41.8/24.2 |
| R3 | 7030003560 | S.RES | ERJ3GEYJ 103 V (10 k) | B | 42.5/21 |
| R4 | 7030003560 | S.RES | ERJ3GEYJ 103 V (10 k) | B | 41.8/13.7 |
| R5 | 7030003440 | S.RES | ERJ3GEYJ 102 V (1 k) | B | 23.2/6 |
| R6 | 7030003440 | S.RES | ERJ3GEYJ 102 V (1 k) | B | 21.9/6 |
| R7 | 7030003640 | S.RES | ERJ3GEYJ 473 V (47 k) | B | 20/6.7 |
| R8 | 7030003440 | S.RES | ERJ3GEYJ 102 V (1 k) | B | 14.1/8.2 |
| R9 | 7030003640 | S.RES | ERJ3GEYJ 473 V (47 k) | B | 14.5/11.6 |
| R10 | 7030003640 | S.RES | ERJ3GEYJ 473 V (47 k) | T | 43.8/13.1 |
| R11 | 7030003460 | S.RES | ERJ3GEYJ 152 V (1.5 k) | B | 48.2/9.7 |
| R12 | 7030003560 | S.RES | ERJ3GEYJ 103 V (10 k) | B | 26.8/13.3 |
| R151 | 7030003320 | S.RES | ERJ3GEYJ 101 V (100) | T | 44.3/5.3 |
| R152 | 7030003800 | S.RES | ERJ3GEYJ 105 V (1 M) | B | 43.5/6.2 |
| R171 | 7030003320 | S.RES | ERJ3GEYJ 101 V (100) | T | 41.3/1.4 |
| R181 | 7030003560 | S.RES | ERJ3GEYJ 103 V (10 k) | T | 9.1/7 |
| R182 | 7030003560 | S.RES | ERJ3GEYJ 103 V (10 k) | T | 6.3/7 |
| R183 | 7030003560 | S.RES | ERJ3GEYJ 103 V (10 k) | T | 11.9/8.3 |
| R184 | 7030003560 | S.RES | ERJ3GEYJ 103 V (10 k) | T | 11.9/7 |
| R201 | 7030003860 | S.RES | ERJ3GE JPW V | T | 30.8/39.2 |
| R301 | 7030003860 | S.RES | ERJ3GE JPW V | T | 79.5/38.4 |
| R302 | 7030009591 | S.RES | ERA3YED 472V (4.7 k) | T | 77.6/46.9 |
| R303 | 7030009591 | S.RES | ERA3YED 472V (4.7 k) | T | 75.7/46.1 |
| R304 | 7030003320 | S.RES | ERJ3GEYJ 101 V (100) | T | 78.1/40.7 |
| R305 | 7030003860 | S.RES | ERJ3GE JPW V | T | 75.7/43.5 |
| R306 | 7030003320 | S.RES | ERJ3GEYJ 101 V (100) | T | 68.9/46.1 |
| R331 | 7030003500 | S.RES | ERJ3GEYJ 332 V (3.3 k) | T | 64.4/39.9 |
| R332 | 7030003480 | S.RES | ERJ3GEYJ 222 V (2.2 k) | T | 65.7/39.9 |
| R333 | 7030003640 | S.RES | ERJ3GEYJ 473 V (47 k) | T | 75/33.2 |
| R341 | 7030003320 | S.RES | ERJ3GEYJ 101 V (100) | T | 73.7/34.8 |
| R342 | 7030003320 | S.RES | ERJ3GEYJ 101 V (100) | T | 66.9/37.3 |
| R343 | 7030006601 | S.RES | ERA3YED 272V (2.7 k) | T | 73.7/37.4 |
| R344 | 7030010390 | S.RES | ERA3YED 821V (820) | T | 65.6/33.6 |
| R345 | 7030009691 | S.RES | ERA3YED 101V (100) | T | 66.2/31.7 |
| R371 | 7030003320 | S.RES | ERJ3GEYJ 101 V (100) | T | 63.4/43.8 |
| R372 | 7030003320 | S.RES | ERJ3GEYJ 101 V (100) | T | 55.3/46.3 |
| R373 | 7030006601 | S.RES | ERA3YED 272V (2.7 k) | T | 63.4/45.6 |
| R374 | 7030010390 | S.RES | ERA3YED 821V (820) | T | 54.7/41.8 |
| R375 | 7030009691 | S.RES | ERA3YED 101V (100) | T | 56/40.5 |
| R401 | 7030009591 | S.RES | ERA3YED 472V (4.7 k) | T | 53.1/42.5 |
| R402 | 7030009591 | S.RES | ERA3YED 472V (4.7 k) | T | 51.8/44 |
| R403 | 7030003640 | S.RES | ERJ3GEYJ 473 V (47 k) | T | 54.1/38.7 |

## [DSP-B BOARD]

| REF NO. | ORDER NO. | DESCRIPTION | | M. | H/V LOCATION |
|---|---|---|---|---|---|
| R404 | 7030003200 | S.RES | ERJ3GEYJ 100 V (10) | T | 50/40 |
| R405 | 7030003320 | S.RES | ERJ3GEYJ 101 V (100) | T | 51.1/38.1 |
| R406 | 7030003640 | S.RES | ERJ3GEYJ 473 V (47 k) | T | 49.8/38.1 |
| R407 | 7030003460 | S.RES | ERJ3GEYJ 152 V (1.5 k) | B | 46.8/36 |
| R409 | 7030003640 | S.RES | ERJ3GEYJ 473 V (47 k) | T | 52.3/23.8 |
| R410 | 7030003640 | S.RES | ERJ3GEYJ 473 V (47 k) | T | 47.2/23.8 |
| R411 | 7030003640 | S.RES | ERJ3GEYJ 473 V (47 k) | T | 49.8/23.8 |
| R412 | 7030003520 | S.RES | ERJ3GEYJ 472 V (4.7 k) | T | 56/22.3 |
| R413 | 7030003520 | S.RES | ERJ3GEYJ 472 V (4.7 k) | T | 54.1/21.9 |
| R451 | 7030003800 | S.RES | ERJ3GEYJ 105 V (1 M) | T | 42.6/36.6 |
| R501 | 7030006521 | S.RES | ERA3YED 561V (560) | T | 76.1/29.9 |
| R502 | 7030003360 | S.RES | ERJ3GEYJ 221 V (220) | T | 70.3/23.4 |
| R503 | 7030003380 | S.RES | ERJ3GEYJ 331 V (330) | T | 65.3/28.9 |
| R504 | 7030003680 | S.RES | ERJ3GEYJ 104 V (100 k) | T | 65.3/27.6 |
| R551 | 7030003320 | S.RES | ERJ3GEYJ 101 V (100) | T | 49.5/8.6 |
| R559 | 7030003640 | S.RES | ERJ3GEYJ 473 V (47 k) | T | 59.8/10.5 |
| R601 | 7030006521 | S.RES | ERA3YED 561V (560) | T | 63.1/20.7 |
| R602 | 7030007661 | S.RES | ERA3YED 331V (330) | T | 64/22 |
| R603 | 7030007661 | S.RES | ERA3YED 331V (330) | T | 59/19.8 |
| R604 | 7030009961 | S.RES | ERA3YED 221V (220) | T | 68.7/21 |
| R605 | 7030007661 | S.RES | ERA3YED 331V (330) | T | 65.7/20.7 |
| R606 | 7030003320 | S.RES | ERJ3GEYJ 101 V (100) | T | 67.1/13.9 |
| R607 | 7030003320 | S.RES | ERJ3GEYJ 101 V (100) | T | 61.9/13.9 |
| R651 | 7030006521 | S.RES | ERA3YED 561V (560) | T | 64.3/10.6 |
| R652 | 7030007661 | S.RES | ERA3YED 331V (330) | T | 65.3/11.9 |
| R653 | 7030007661 | S.RES | ERA3YED 331V (330) | T | 62.1/10.1 |
| R654 | 7030009961 | S.RES | ERA3YED 221V (220) | T | 69.5/10.6 |
| R655 | 7030007661 | S.RES | ERA3YED 331V (330) | T | 66.9/10.6 |
| R658 | 7030003320 | S.RES | ERJ3GEYJ 101 V (100) | T | 67.7/3.8 |
| R659 | 7030003320 | S.RES | ERJ3GEYJ 101 V (100) | T | 64/3.8 |
| R701 | 7030010770 | S.RES | ERA3YED 681V (680) | T | 71.3/21 |
| R702 | 7030009861 | S.RES | ERA3YED 471V (470) | T | 74.8/22.7 |
| R703 | 7030010770 | S.RES | ERA3YED 681V (680) | T | 70.5/13.5 |
| R704 | 7030009861 | S.RES | ERA3YED 471V (470) | T | 77.2/13.3 |
| R705 | 7030009691 | S.RES | ERA3YED 101V (100) | T | 77.4/22.2 |
| R706 | 7030003320 | S.RES | ERJ3GEYJ 101 V (100) | T | 77.3/20.9 |
| R707 | 7030003320 | S.RES | ERJ3GEYJ 101 V (100) | T | 74.1/14.1 |
| R801 | 7030003650 | S.RES | ERJ3GEYJ 563 V (56 k) | T | 78/27.2 |
| R802 | 7030003680 | S.RES | ERJ3GEYJ 104 V (100 k) | T | 78/25.9 |
| R803 | 7030003480 | S.RES | ERJ3GEYJ 222 V (2.2 k) | T | 78.7/24 |
| R804 | 7030003490 | S.RES | ERJ3GEYJ 272 V (2.7 k) | T | 78/29.8 |
| R805 | 7030003340 | S.RES | ERJ3GEYJ 151 V (150) | T | 78/28.5 |
| R901 | 7030003860 | S.RES | ERJ3GE JPW V | T | 46.6/21 |
| R962 | 7030003320 | S.RES | ERJ3GEYJ 101 V (100) | T | 12.1/16.8 |
| R963 | 7030003320 | S.RES | ERJ3GEYJ 101 V (100) | T | 11.9/15.5 |
| R964 | 7030003320 | S.RES | ERJ3GEYJ 101 V (100) | T | 11.9/14.2 |
| R965 | 7030003320 | S.RES | ERJ3GEYJ 101 V (100) | T | 11.9/12.9 |
| R967 | 7030003320 | S.RES | ERJ3GEYJ 101 V (100) | T | 13.6/37.8 |
| R968 | 7030003320 | S.RES | ERJ3GEYJ 101 V (100) | T | 11.9/11.6 |
| R969 | 7030003320 | S.RES | ERJ3GEYJ 101 V (100) | T | 13.6/48.2 |
| R970 | 7030003320 | S.RES | ERJ3GEYJ 101 V (100) | T | 13.6/46.9 |
| R971 | 7030003320 | S.RES | ERJ3GEYJ 101 V (100) | T | 13.6/45.6 |
| R972 | 7030003320 | S.RES | ERJ3GEYJ 101 V (100) | T | 13.6/44.3 |
| R973 | 7030003320 | S.RES | ERJ3GEYJ 101 V (100) | T | 13.6/43 |
| R974 | 7030003320 | S.RES | ERJ3GEYJ 101 V (100) | T | 13.6/41.7 |
| R975 | 7030003320 | S.RES | ERJ3GEYJ 101 V (100) | T | 13.6/40.4 |
| R976 | 7030003320 | S.RES | ERJ3GEYJ 101 V (100) | T | 13.6/39.1 |
| C1 | 4030011600 | S.CER | C1608 JB 1E 104K-T | B | 15.2/30.5 |
| C2 | 4030011600 | S.CER | C1608 JB 1E 104K-T | B | 41.8/30.7 |
| C3 | 4030011600 | S.CER | C1608 JB 1E 104K-T | B | 18/32.9 |
| C4 | 4030011600 | S.CER | C1608 JB 1E 104K-T | B | 39.4/32.9 |
| C5 | 4030011600 | S.CER | C1608 JB 1E 104K-T | B | 23/26.3 |
| C6 | 4030011600 | S.CER | C1608 JB 1E 104K-T | B | 24.3/26.3 |
| C7 | 4030011600 | S.CER | C1608 JB 1E 104K-T | B | 28.6/26.3 |
| C8 | 4030011600 | S.CER | C1608 JB 1E 104K-T | B | 29.9/26.3 |
| C9 | 4030011600 | S.CER | C1608 JB 1E 104K-T | B | 33.8/26.3 |
| C10 | 4030011600 | S.CER | C1608 JB 1E 104K-T | B | 21.5/23.3 |
| C11 | 4030011600 | S.CER | C1608 JB 1E 104K-T | B | 36/23.7 |
| C12 | 4030011600 | S.CER | C1608 JB 1E 104K-T | T | 13.7/21 |
| C13 | 4030011600 | S.CER | C1608 JB 1E 104K-T | B | 22.2/20.2 |
| C14 | 4030011600 | S.CER | C1608 JB 1E 104K-T | B | 36/21.1 |
| C15 | 4030011600 | S.CER | C1608 JB 1E 104K-T | B | 22.2/18.9 |
| C16 | 4030011600 | S.CER | C1608 JB 1E 104K-T | B | 36/18.5 |
| C17 | 4030011600 | S.CER | C1608 JB 1E 104K-T | T | 43.5/20 |
| C18 | 4030011600 | S.CER | C1608 JB 1E 104K-T | B | 22.2/15.2 |
| C19 | 4030011600 | S.CER | C1608 JB 1E 104K-T | B | 34.7/14.4 |
| C20 | 4030011600 | S.CER | C1608 JB 1E 104K-T | B | 23.1/13.3 |
| C21 | 4030011600 | S.CER | C1608 JB 1E 104K-T | B | 24.4/13.3 |
| C22 | 4030011600 | S.CER | C1608 JB 1E 104K-T | B | 28.1/13.3 |
| C23 | 4030011600 | S.CER | C1608 JB 1E 104K-T | B | 32.6/12.6 |
| C24 | 4030011600 | S.CER | C1608 JB 1E 104K-T | B | 35.2/12.6 |
| C25 | 4030011600 | S.CER | C1608 JB 1E 104K-T | B | 17.3/6.7 |
| C26 | 4030011600 | S.CER | C1608 JB 1E 104K-T | B | 33.1/6.8 |
| C27 | 4030011600 | S.CER | C1608 JB 1E 104K-T | B | 41.8/11.1 |
| C28 | 4030011600 | S.CER | C1608 JB 1E 104K-T | B | 15.4/8.2 |
| C29 | 4030011600 | S.CER | C1608 JB 1E 104K-T | B | 40.9/6.8 |
| C30 | 4030011600 | S.CER | C1608 JB 1E 104K-T | T | 35.2/5 |
| C31 | 4030011600 | S.CER | C1608 JB 1E 104K-T | T | 28.5/5.2 |
| C32 | 4030011600 | S.CER | C1608 JB 1E 104K-T | T | 37.8/5 |
| C33 | 4030011600 | S.CER | C1608 JB 1E 104K-T | T | 18.5/35.2 |
| C34 | 4030011600 | S.CER | C1608 JB 1E 104K-T | T | 36.4/35 |
| C35 | 4030011600 | S.CER | C1608 JB 1E 104K-T | B | 26/32.9 |
| C36 | 4030011600 | S.CER | C1608 JB 1E 104K-T | B | 29.3/32.9 |
| C37 | 4030011600 | S.CER | C1608 JB 1E 104K-T | B | 36.8/32.9 |
| C38 | 4030011600 | S.CER | C1608 JB 1E 104K-T | B | 15.2/27.9 |
| C39 | 4030011600 | S.CER | C1608 JB 1E 104K-T | B | 22.4/32.9 |
| C40 | 4030011600 | S.CER | C1608 JB 1E 104K-T | B | 26/26.3 |
| C41 | 4030011600 | S.CER | C1608 JB 1E 104K-T | B | 21.7/26.3 |
| C42 | 4030011600 | S.CER | C1608 JB 1E 104K-T | B | 27.3/26.3 |
| C43 | 4030011600 | S.CER | C1608 JB 1E 104K-T | B | 32.5/26.3 |
| C44 | 4030011600 | S.CER | C1608 JB 1E 104K-T | B | 35.1/26.3 |
| C45 | 4030011600 | S.CER | C1608 JB 1E 104K-T | B | 41.8/26.8 |

M.=Mounted side (T: Mounted on the Top side, B: Mounted on the Bottom side)
S.=Surface mount

## [DSP-B BOARD]

| REF NO. | ORDER NO. | DESCRIPTION | M. | H/V LOCATION |
|---|---|---|---|---|
| C46 | 4030011600 | S.CER C1608 JB 1E 104K-T | B | 15.3/24.9 |
| C47 | 4030011600 | S.CER C1608 JB 1E 104K-T | T | 43.5/29 |
| C48 | 4030011600 | S.CER C1608 JB 1E 104K-T | B | 22.2/21.5 |
| C49 | 4030011600 | S.CER C1608 JB 1E 104K-T | B | 41.8/17.9 |
| C50 | 4030011600 | S.CER C1608 JB 1E 104K-T | B | 22.2/17.6 |
| C51 | 4030011600 | S.CER C1608 JB 1E 104K-T | B | 36/15.9 |
| C52 | 4030011600 | S.CER C1608 JB 1E 104K-T | B | 15.8/11.6 |
| C53 | 4030011600 | S.CER C1608 JB 1E 104K-T | B | 21.8/13.3 |
| C54 | 4030011600 | S.CER C1608 JB 1E 104K-T | T | 42.9/9.9 |
| C55 | 4030011600 | S.CER C1608 JB 1E 104K-T | B | 29.4/13.3 |
| C56 | 4030011600 | S.CER C1608 JB 1E 104K-T | B | 25/6.7 |
| C57 | 4030011600 | S.CER C1608 JB 1E 104K-T | B | 29.8/6.8 |
| C58 | 4030011600 | S.CER C1608 JB 1E 104K-T | B | 38.3/6.8 |
| C59 | 4030011600 | S.CER C1608 JB 1E 104K-T | T | 20.3/5.3 |
| C60 | 4510007130 | S.ELE EEFCD 0J 470R | T | 19.6/44 |
| C61 | 4550007480 | S.TAN F930J106MAABMA | B | 44.8/29.7 |
| C62 | 4510007130 | S.ELE EEFCD 0J 470R | T | 25.7/43.9 |
| C101 | 4030011600 | S.CER C1608 JB 1E 104K-T | B | 35.7/6.8 |
| C102 | 4550007480 | S.TAN F930J106MAABMA | B | 30.6/2.6 |
| C151 | 4030011600 | S.CER C1608 JB 1E 104K-T | B | 45.6/10 |
| C152 | 4030007030 | S.CER C1608 CH 1H 150J-T | B | 46.1/6.2 |
| C153 | 4030007030 | S.CER C1608 CH 1H 150J-T | B | 43.1/8 |
| C171 | 4030011600 | S.CER C1608 JB 1E 104K-T | T | 41.3/2.7 |
| C181 | 4030011600 | S.CER C1608 JB 1E 104K-T | T | 31/4.3 |
| C191 | 4030011600 | S.CER C1608 JB 1E 104K-T | T | 22.6/1.2 |
| C201 | 4030011600 | S.CER C1608 JB 1E 104K-T | B | 41.4/43.3 |
| C301 | 4340000250 | S.MLR ECHU 1C 104JX5 | T | 77.9/44 |
| C302 | 4550007500 | S.TAN F931D106MBABMA | B | 76.5/43.7 |
| C303 | 4030011600 | S.CER C1608 JB 1E 104K-T | T | 75.6/40.9 |
| C304 | 4550007500 | S.TAN F931D106MBABMA | B | 71.7/43.7 |
| C305 | 4030011600 | S.CER C1608 JB 1E 104K-T | T | 67.6/46.1 |
| C306 | 4030007050 | S.CER C1608 CH 1H 220J-T | T | 72.4/40.1 |
| C331 | 4030011600 | S.CER C1608 JB 1E 104K-T | T | 78.8/32.8 |
| C332 | 4550007520 | S.TAN F931A106MAABMA | B | 67.9/35.2 |
| C333 | 4030011600 | S.CER C1608 JB 1E 104K-T | T | 79.5/35.8 |
| C341 | 4550007500 | S.TAN F931D106MBABMA | B | 73.1/32.4 |
| C342 | 4030011600 | S.CER C1608 JB 1E 104K-T | T | 73.7/31.6 |
| C343 | 4550007500 | S.TAN F931D106MBABMA | B | 73.2/38.1 |
| C344 | 4030011600 | S.CER C1608 JB 1E 104K-T | T | 65.6/37.3 |
| C345 | 4340000250 | S.MLR ECHU 1C 104JX5 | T | 76.7/38.1 |
| C346 | 4030018580 | S.CER C1608 CH 1H 821J-T | T | 66.9/33.6 |
| C347 | 4030011600 | S.CER C1608 JB 1E 104K-T | T | 66.1/35.5 |
| C348 | 4030007050 | S.CER C1608 CH 1H 220J-T | T | 70.9/30.9 |
| C371 | 4550007500 | S.TAN F931D106MBABMA | B | 59.8/43.8 |
| C372 | 4030011600 | S.CER C1608 JB 1E 104K-T | T | 63.4/42.5 |
| C373 | 4550007500 | S.TAN F931D106MBABMA | B | 50.1/43.9 |
| C374 | 4030011600 | S.CER C1608 JB 1E 104K-T | T | 53.4/45.5 |
| C375 | 4340000250 | S.MLR ECHU 1C 104JX5 | T | 68.1/42.6 |
| C376 | 4030018580 | S.CER C1608 CH 1H 821J-T | T | 56/43.1 |
| C377 | 4030011600 | S.CER C1608 JB 1E 104K-T | T | 55.3/45 |
| C378 | 4030007050 | S.CER C1608 CH 1H 220J-T | T | 59.4/39.5 |
| C401 | 4550007520 | S.TAN F931A106MAABMA | B | 54.9/43.8 |
| C402 | 4030017840 | S.CER C2012 CH 1H 222J-T | T | 58.1/37.6 |
| C403 | 4550007480 | S.TAN F930J106MAABMA | B | 63.1/35.2 |
| C404 | 4030011810 | S.CER C1608 JB 1A 224K-T | T | 61.5/37.4 |
| C405 | 4550007480 | S.TAN F930J106MAABMA | B | 58.3/35.2 |
| C406 | 4030011810 | S.CER C1608 JB 1A 224K-T | T | 63.5/36.7 |
| C407 | 4550007480 | S.TAN F930J106MAABMA | B | 50.4/36.1 |
| C408 | 4030011600 | S.CER C1608 JB 1E 104K-T | T | 54.1/37.4 |
| C409 | 4030011600 | S.CER C1608 JB 1E 104K-T | T | 54.1/23.2 |
| C410 | 4030009000 | S.CER C2012 JB 1C 224K-T | T | 62.1/24.2 |
| C411 | 4550007480 | S.TAN F930J106MAABMA | B | 63.1/28.4 |
| C412 | 4550007480 | S.TAN F930J106MAABMA | B | 58.3/29.1 |
| C413 | 4030009000 | S.CER C2012 JB 1C 224K-T | T | 59/22.5 |
| C414 | 4030011600 | S.CER C1608 JB 1E 104K-T | T | 54.1/24.5 |
| C415 | 4550007520 | S.TAN F931A106MAABMA | B | 53/26.5 |
| C416 | 4550007520 | S.TAN F931A106MAABMA | B | 53/31.3 |
| C417 | 4030017840 | S.CER C2012 CH 1H 222J-T | T | 58/24.2 |
| C450 | 4030011600 | S.CER C1608 JB 1E 104K-T | T | 43.1/35.3 |
| C451 | 4030011600 | S.CER C1608 JB 1E 104K-T | T | 43.6/42.9 |
| C452 | 4030006860 | S.CER C1608 JB 1H 102K-T | T | 40.8/39.6 |
| C501 | 4030011600 | S.CER C1608 JB 1E 104K-T | T | 74.8/24 |
| C502 | 4550007500 | S.TAN F931D106MBABMA | B | 77.5/33.1 |
| C503 | 4030011600 | S.CER C1608 JB 1E 104K-T | T | 71.6/23.4 |
| C504 | 4550007500 | S.TAN F931D106MBABMA | B | 67.9/29.1 |
| C506 | 4030007090 | S.CER C1608 CH 1H 470J-T | T | 67.1/28.4 |
| C507 | 4030007090 | S.CER C1608 CH 1H 470J-T | T | 76.1/27.3 |
| C551 | 4550007520 | S.TAN F931A106MAABMA | B | 50.3/8.7 |
| C552 | 4030011600 | S.CER C1608 JB 1E 104K-T | T | 49.5/5.5 |
| C553 | 4550007520 | S.TAN F931A106MAABMA | B | 55/13.3 |
| C554 | 4030011600 | S.CER C1608 JB 1E 104K-T | T | 60/7.6 |
| C555 | 4030011600 | S.CER C1608 JB 1E 104K-T | T | 59.8/4.6 |
| C556 | 4550007480 | S.TAN F930J106MAABMA | B | 53.6/7.1 |
| C557 | 4030011600 | S.CER C1608 JB 1E 104K-T | T | 60.7/2.8 |
| C558 | 4550007520 | S.TAN F931A106MAABMA | B | 53.6/4.3 |
| C601 | 4550007480 | S.TAN F930J106MAABMA | B | 61.3/17.2 |
| C602 | 4030018510 | S.CER C2012 CH 1H 682J-T | T | 58.8/16.5 |
| C603 | 4550007500 | S.TAN F931D106MBABMA | B | 68.2/15 |
| C604 | 4030011600 | S.CER C1608 JB 1E 104K-T | T | 58.2/14.2 |
| C605 | 4030011600 | S.CER C1608 JB 1E 104K-T | T | 64.5/13.9 |
| C606 | 4550007500 | S.TAN F931D106MBABMA | B | 69.2/19.2 |
| C607 | 4030018510 | S.CER C2012 CH 1H 682J-T | T | 67/22.5 |
| C608 | 4030007050 | S.CER C1608 CH 1H 220J-T | T | 68.3/16.7 |
| C651 | 4550007480 | S.TAN F930J106MAABMA | B | 60.1/9.2 |
| C652 | 4030018510 | S.CER C2012 CH 1H 682J-T | T | 61.9/6.6 |
| C653 | 4550007500 | S.TAN F931D106MBABMA | B | 59.9/2.6 |
| C654 | 4030011600 | S.CER C1608 JB 1E 104K-T | T | 64/2.5 |
| C655 | 4030011600 | S.CER C1608 JB 1E 104K-T | T | 67.7/2.5 |
| C656 | 4550007500 | S.TAN F931D106MBABMA | B | 59.9/6 |
| C657 | 4030018510 | S.CER C2012 CH 1H 682J-T | T | 68.3/12.2 |
| C658 | 4030007050 | S.CER C1608 CH 1H 220J-T | T | 71.4/6.9 |
| C701 | 4030017840 | S.CER C2012 CH 1H 222J-T | T | 74.3/21.1 |
| C702 | 4030017840 | S.CER C2012 CH 1H 222J-T | T | 78.9/13.4 |
| C703 | 4550007500 | S.TAN F931D106MBABMA | B | 75.3/15.7 |

## [DSP-B BOARD]

| REF NO. | ORDER NO. | DESCRIPTION | M. | H/V LOCATION |
|---|---|---|---|---|
| C704 | 4030011600 | S.CER C1608 JB 1E 104K-T | T | 75.9/12.8 |
| C705 | 4030011600 | S.CER C1608 JB 1E 104K-T | T | 79.4/20.6 |
| C706 | 4550007500 | S.TAN F931D106MBABMA | B | 75.6/21.1 |
| C707 | 4030007050 | S.CER C1608 CH 1H 220J-T | T | 78.7/18 |
| C771 | 4550007480 | S.TAN F930J106MAABMA | B | 49.8/14.1 |
| C772 | 4030011600 | S.CER C1608 JB 1E 104K-T | T | 49.5/15 |
| C773 | 4550007480 | S.TAN F930J106MAABMA | B | 55/18.1 |
| C801 | 4030011600 | S.CER C1608 JB 1E 104K-T | T | 77.4/24 |
| C921 | 4550007510 | S.TAN F931C106MBABMA | B | 66.5/2.6 |
| C922 | 4030011600 | S.CER C1608 JB 1E 104K-T | T | 71/3.6 |
| C923 | 4550002830 | S.TAN TEESVD2 1V 685M12R | B | 78.3/6.5 |
| C924 | 4030011600 | S.CER C1608 JB 1E 104K-T | T | 80.1/8.6 |
| C925 | 4550007510 | S.TAN F931C106MBABMA | B | 67.1/10.5 |
| C926 | 4030011600 | S.CER C1608 JB 1E 104K-T | T | 71.8/12.7 |
| C927 | 4550002830 | S.TAN TEESVD2 1V 685M12R | B | 72.6/6.5 |
| C928 | 4030011600 | S.CER C1608 JB 1E 104K-T | T | 79.6/5.2 |
| C961 | 4030011600 | S.CER C1608 JB 1E 104K-T | B | 11.2/15.7 |
| C962 | 4550007520 | S.TAN F931A106MAABMA | B | 12/18.8 |
| C963 | 4030011600 | S.CER C1608 JB 1E 104K-T | B | 10.7/25.4 |
| C964 | 4550007520 | S.TAN F931A106MAABMA | B | 11.4/29.4 |
| J921 | 6910013900 | CNR IMSA-9180S-22A | | |
| J961 | 6910012460 | CNR IMSA-9180S-30A | | |

## [DSP-TX BOARD]

| REF NO. | ORDER NO. | DESCRIPTION | M. | H/V LOCATION |
|---|---|---|---|---|
| IC1 | 1140012211 | S.IC TMS320C6713BZDP225 | T | 28.1/20.4 |
| IC151 | 1130008361 | S.IC TC7SHU04FU (TE85L,JF) | B | 45.5/8.1 |
| IC171 | 1130008041 | S.IC TC7SH04FU (TE85L,JF) | T | 41.3/4.6 |
| IC181 | 1130011150 | S.IC SN74AHC2G08HDCTR | T | 30.2/1.9 |
| IC191 | 1130011150 | S.IC SN74AHC2G08HDCTR | T | 24/3.5 |
| IC201 | 1130012205 | S.IC AT29LV040A-15TU (SX-2590F-4) | B | 29.3/42 |
| IC203 | 1110006411 | S.IC R3111N111A-TR-F | T | 30.2/36.6 |
| IC301 | 1110006100 | S.IC NJM5534MD-TE1 | T | 72.3/44.4 |
| IC341 | 1110006100 | S.IC NJM5534MD-TE1 | T | 72.1/35.2 |
| IC371 | 1110006100 | S.IC NJM5534MD-TE1 | T | 59.4/44.4 |
| IC401 | 1110006111 | S.IC AK5394AVSP/P | T | 54.2/31 |
| IC451 | 1130006891 | S.IC TC7S04FU (TE85R,F) | T | 42.8/35.8 |
| IC452 | 1130012160 | S.IC SN74LVC1GU04DCKR | T | 42.3/39.8 |
| IC551 | 1190002090 | S.IC AD1854JRSZRL | T | 53.3/5.8 |
| IC601 | 1110006100 | S.IC NJM5534MD-TE1 | T | 53.1/15.2 |
| IC651 | 1110006100 | S.IC NJM5534MD-TE1 | T | 65.3/5 |
| IC701 | 1110006100 | S.IC NJM5534MD-TE1 | T | 63.2/14.8 |
| IC801 | 1110006100 | S.IC NJM5534MD-TE1 | T | 68.4/25.8 |
| IC831 | 1110006100 | S.IC NJM5534MD-TE1 | T | 73.1/15.8 |
| IC871 | 1110006100 | S.IC NJM5534MD-TE1 | T | 77/26.1 |
| FI101 | 2040000790 | S.LC EXCCET103U | T | 36.5/2.2 |
| X151 | 6050011660 | S.XTL CR-754 (30.000 MHz) | B | 40.5/2.9 |
| L1 | 6200003950 | S.COL HF50ACC 322513-T | B | 45/39.6 |
| L2 | 6180003501 | S.COL SLF6028T-100M1R3-PF | B | 13.6/35.4 |
| L3 | 6200003640 | S.COL MLF1608E 100K-T | B | 10.9/7.7 |
| L401 | 6200003950 | S.COL HF50ACC 322513-T | T | 49.4/43.1 |
| L921 | 6200003950 | S.COL HF50ACC 322513-T | T | 75/3.7 |
| L922 | 6200003950 | S.COL HF50ACC 322513-T | T | 79.7/8.8 |
| L924 | 6200003950 | S.COL HF50ACC 322513-T | T | 75/8.8 |
| L925 | 6200003950 | S.COL HF50ACC 322513-T | T | 79.7/3.7 |
| L961 | 6200003950 | S.COL HF50ACC 322513-T | B | 11.5/11.9 |
| L962 | 6200003950 | S.COL HF50ACC 322513-T | B | 12.6/24 |
| R1 | 7030003560 | S.RES ERJ3GEYJ 103 V (10 k) | B | 43/22.2 |
| R2 | 7030003560 | S.RES ERJ3GEYJ 103 V (10 k) | B | 42.2/24.2 |
| R3 | 7030003560 | S.RES ERJ3GEYJ 103 V (10 k) | B | 43/20.9 |
| R4 | 7030003560 | S.RES ERJ3GEYJ 103 V (10 k) | B | 42.4/13.7 |
| R5 | 7030003440 | S.RES ERJ3GEYJ 102 V (1 k) | B | 23.2/5.5 |
| R6 | 7030003440 | S.RES ERJ3GEYJ 102 V (1 k) | B | 21.9/5.5 |
| R7 | 7030003640 | S.RES ERJ3GEYJ 473 V (47 k) | B | 20.6/5.5 |
| R8 | 7030003440 | S.RES ERJ3GEYJ 102 V (1 k) | B | 13.7/8.1 |
| R9 | 7030003640 | S.RES ERJ3GEYJ 473 V (47 k) | B | 13.7/11.5 |
| R10 | 7030003640 | S.RES ERJ3GEYJ 473 V (47 k) | T | 43.8/13.1 |
| R11 | 7030003460 | S.RES ERJ3GEYJ 152 V (1.5 k) | B | 41.8/8.5 |
| R12 | 7030003560 | S.RES ERJ3GEYJ 103 V (10 k) | B | 26.8/13.8 |
| R151 | 7030003320 | S.RES ERJ3GEYJ 101 V (100) | T | 44.6/5.3 |
| R152 | 7030003800 | S.RES ERJ3GEYJ 105 V (1 M) | B | 43.5/6.2 |
| R171 | 7030003320 | S.RES ERJ3GEYJ 101 V (100) | T | 41.3/1.4 |
| R181 | 7030003560 | S.RES ERJ3GEYJ 103 V (10 k) | T | 6.4/7 |
| R182 | 7030003560 | S.RES ERJ3GEYJ 103 V (10 k) | T | 9.2/7 |
| R183 | 7030003560 | S.RES ERJ3GEYJ 103 V (10 k) | T | 11.8/8.3 |
| R184 | 7030003560 | S.RES ERJ3GEYJ 103 V (10 k) | T | 11.8/7 |
| R201 | 7030003860 | S.RES ERJ3GE JPW V | T | 30.8/39.3 |
| R301 | 7030003440 | S.RES ERJ3GEYJ 102 V (1 k) | T | 79.5/37.7 |
| R302 | 7030009591 | S.RES ERA3YED 472V (4.7 k) | T | 77.6/46.9 |
| R303 | 7030009591 | S.RES ERA3YED 472V (4.7 k) | T | 75.7/46.1 |
| R304 | 7030003320 | S.RES ERJ3GEYJ 101 V (100) | T | 78.1/40.1 |
| R305 | 7030003440 | S.RES ERJ3GEYJ 102 V (1 k) | T | 75.7/43.5 |
| R306 | 7030003320 | S.RES ERJ3GEYJ 101 V (100) | T | 68.9/46.1 |
| R341 | 7030003320 | S.RES ERJ3GEYJ 101 V (100) | T | 76.2/34.6 |
| R342 | 7030003320 | S.RES ERJ3GEYJ 101 V (100) | T | 68.5/38.4 |
| R343 | 7030005321 | S.RES ERA3YED 103V (10 k) | T | 64.5/34.6 |
| R344 | 7030009591 | S.RES ERA3YED 472V (4.7 k) | T | 67/33.9 |
| R345 | 7030009691 | S.RES ERA3YED 101V (100) | T | 67.7/31.9 |
| R371 | 7030003320 | S.RES ERJ3GEYJ 101 V (100) | B | 62.9/42.1 |
| R372 | 7030003320 | S.RES ERJ3GEYJ 101 V (100) | T | 55.3/46.3 |

M.=Mounted side (T: Mounted on the Top side, B: Mounted on the Bottom side)

S.=Surface mount

## [DSP-TX BOARD]

| REF NO. | ORDER NO. | DESCRIPTION | M. | H/V LOCATION |
|---|---|---|---|---|
| R373 | 7030005321 | S.RES ERA3YED 103V (10 k) | T | 63.7/46.2 |
| R374 | 7030009591 | S.RES ERA3YED 472V (4.7 k) | T | 54.7/41.8 |
| R375 | 7030009691 | S.RES ERA3YED 101V (100) | T | 56/40.5 |
| R401 | 7030009591 | S.RES ERA3YED 472V (4.7 k) | T | 53.1/42.5 |
| R402 | 7030009591 | S.RES ERA3YED 472V (4.7 k) | T | 51.6/44 |
| R403 | 7030003640 | S.RES ERJ3GEYJ 473 V (47 k) | T | 54.1/38.7 |
| R404 | 7030003200 | S.RES ERJ3GEYJ 100 V (10) | T | 50/40 |
| R405 | 7030003320 | S.RES ERJ3GEYJ 101 V (100) | T | 51.1/38.1 |
| R406 | 7030003640 | S.RES ERJ3GEYJ 473 V (47 k) | T | 49.8/38.1 |
| R407 | 7030003460 | S.RES ERJ3GEYJ 152 V (1.5 k) | B | 48/35.4 |
| R409 | 7030003640 | S.RES ERJ3GEYJ 473 V (47 k) | T | 51.9/23.8 |
| R410 | 7030003640 | S.RES ERJ3GEYJ 473 V (47 k) | T | 50.6/23.8 |
| R411 | 7030003640 | S.RES ERJ3GEYJ 473 V (47 k) | T | 49/23.8 |
| R412 | 7030003520 | S.RES ERJ3GEYJ 472 V (4.7 k) | T | 57.2/22.2 |
| R413 | 7030003520 | S.RES ERJ3GEYJ 472 V (4.7 k) | T | 57.2/20.9 |
| R414 | 7030003360 | S.RES ERJ3GEYJ 221 V (220) | T | 46/38.2 |
| R451 | 7030003800 | S.RES ERJ3GEYJ 105 V (1 M) | T | 40.4/41.1 |
| R452 | 7030003440 | S.RES ERJ3GEYJ 102 V (1 k) | B | 45.8/35.5 |
| R551 | 7030003360 | S.RES ERJ3GEYJ 221 V (220) | B | 54/9.3 |
| R601 | 7030006521 | S.RES ERA3YED 561V (560) | T | 50.2/18.6 |
| R602 | 7030007661 | S.RES ERA3YED 331V (330) | T | 50.2/19.9 |
| R603 | 7030007661 | S.RES ERA3YED 331V (330) | T | 48.3/17.1 |
| R604 | 7030009961 | S.RES ERA3YED 221V (220) | T | 55.4/18.6 |
| R605 | 7030007661 | S.RES ERA3YED 331V (330) | T | 52.8/18.6 |
| R606 | 7030003320 | S.RES ERJ3GEYJ 101 V (100) | B | 51.4/24.7 |
| R607 | 7030003320 | S.RES ERJ3GEYJ 101 V (100) | B | 52.2/13.1 |
| R651 | 7030006521 | S.RES ERA3YED 561V (560) | T | 62.5/8.4 |
| R652 | 7030007661 | S.RES ERA3YED 331V (330) | T | 63.5/9.7 |
| R653 | 7030007661 | S.RES ERA3YED 331V (330) | T | 60.3/8.2 |
| R654 | 7030009961 | S.RES ERA3YED 221V (220) | T | 67.7/8.4 |
| R655 | 7030007661 | S.RES ERA3YED 331V (330) | T | 65.1/8.4 |
| R656 | 7030003320 | S.RES ERJ3GEYJ 101 V (100) | B | 67.2/8.2 |
| R657 | 7030003320 | S.RES ERJ3GEYJ 101 V (100) | B | 65.1/2.8 |
| R701 | 7030010770 | S.RES ERA3YED 681V (680) | T | 58/18.2 |
| R702 | 7030009861 | S.RES ERA3YED 471V (470) | T | 62.1/20 |
| R703 | 7030010770 | S.RES ERA3YED 681V (680) | T | 70.7/9.3 |
| R704 | 7030009861 | S.RES ERA3YED 471V (470) | T | 55.6/11.8 |
| R705 | 7030009691 | S.RES ERA3YED 101V (100) | T | 69/12 |
| R706 | 7030003320 | S.RES ERJ3GEYJ 101 V (100) | B | 61/23.1 |
| R707 | 7030003320 | S.RES ERJ3GEYJ 101 V (100) | B | 54.7/14.5 |
| R801 | 7030009591 | S.RES ERA3YED 472V (4.7 k) | T | 65/22.8 |
| R802 | 7030003320 | S.RES ERJ3GEYJ 101 V (100) | T | 63.5/22.8 |
| R803 | 7030005321 | S.RES ERA3YED 103V (10 k) | T | 68.6/21.1 |
| R804 | 7030003320 | S.RES ERJ3GEYJ 101 V (100) | B | 69.7/31.7 |
| R805 | 7030003320 | S.RES ERJ3GEYJ 101 V (100) | B | 72.4/21.7 |
| R831 | 7030009591 | S.RES ERA3YED 472V (4.7 k) | T | 68.4/17.9 |
| R832 | 7030003320 | S.RES ERJ3GEYJ 101 V (100) | T | 68.6/19.7 |
| R833 | 7030005321 | S.RES ERA3YED 103V (10 k) | T | 69.7/15.3 |
| R834 | 7030003320 | S.RES ERJ3GEYJ 101 V (100) | B | 64/23.2 |
| R835 | 7030003320 | S.RES ERJ3GEYJ 101 V (100) | B | 73.4/13.3 |
| R871 | 7030003520 | S.RES ERJ3GEYJ 472 V (4.7 k) | T | 77.8/13.7 |
| R872 | 7030003520 | S.RES ERJ3GEYJ 472 V (4.7 k) | T | 79.1/18.7 |
| R874 | 7030003320 | S.RES ERJ3GEYJ 101 V (100) | B | 71.3/31.7 |
| R875 | 7030003320 | S.RES ERJ3GEYJ 101 V (100) | B | 74.4/21.3 |
| R901 | 7030003860 | S.RES ERJ3GE JPW V | T | 52.7/22 |
| R903 | 7030003860 | S.RES ERJ3GE JPW V | B | 47.7/38 |
| R904 | 7030003860 | S.RES ERJ3GE JPW V | T | 47.1/4.2 |
| R905 | 7030003860 | S.RES ERJ3GE JPW V | B | 48.1/10.2 |
| R962 | 7030003320 | S.RES ERJ3GEYJ 101 V (100) | T | 12.1/17.5 |
| R963 | 7030003320 | S.RES ERJ3GEYJ 101 V (100) | T | 11.9/16.2 |
| R964 | 7030003320 | S.RES ERJ3GEYJ 101 V (100) | T | 11.9/14.9 |
| R967 | 7030003320 | S.RES ERJ3GEYJ 101 V (100) | T | 13.6/38.7 |
| R968 | 7030003320 | S.RES ERJ3GEYJ 101 V (100) | T | 11.9/12.3 |
| R969 | 7030003320 | S.RES ERJ3GEYJ 101 V (100) | T | 13.6/47.8 |
| R970 | 7030003320 | S.RES ERJ3GEYJ 101 V (100) | T | 13.6/46.5 |
| R971 | 7030003320 | S.RES ERJ3GEYJ 101 V (100) | T | 13.6/45.2 |
| R972 | 7030003320 | S.RES ERJ3GEYJ 101 V (100) | T | 13.6/43.9 |
| R973 | 7030003320 | S.RES ERJ3GEYJ 101 V (100) | T | 13.6/42.6 |
| R974 | 7030003320 | S.RES ERJ3GEYJ 101 V (100) | T | 13.6/41.3 |
| R975 | 7030003320 | S.RES ERJ3GEYJ 101 V (100) | T | 13.6/40 |
| R976 | 7030003320 | S.RES ERJ3GEYJ 101 V (100) | T | 11.9/13.6 |
| | | | | |
| C1 | 4030011600 | S.CER C1608 JB 1E 104K-T | B | 15.2/30.4 |
| C2 | 4030011600 | S.CER C1608 JB 1E 104K-T | B | 42.2/30.7 |
| C3 | 4030011600 | S.CER C1608 JB 1E 104K-T | B | 18/32.9 |
| C4 | 4030011600 | S.CER C1608 JB 1E 104K-T | B | 39.4/32.9 |
| C5 | 4030011600 | S.CER C1608 JB 1E 104K-T | B | 23.3/25.8 |
| C6 | 4030011600 | S.CER C1608 JB 1E 104K-T | B | 24.6/25.8 |
| C7 | 4030011600 | S.CER C1608 JB 1E 104K-T | B | 28.7/25.8 |
| C8 | 4030011600 | S.CER C1608 JB 1E 104K-T | B | 30/25.8 |
| C9 | 4030011600 | S.CER C1608 JB 1E 104K-T | B | 33.8/25.8 |
| C10 | 4030011600 | S.CER C1608 JB 1E 104K-T | B | 22.7/23.8 |
| C11 | 4030011600 | S.CER C1608 JB 1E 104K-T | B | 35.5/23.2 |
| C12 | 4030011600 | S.CER C1608 JB 1E 104K-T | T | 12.6/20.7 |
| C13 | 4030011600 | S.CER C1608 JB 1E 104K-T | B | 22.7/20.2 |
| C14 | 4030011600 | S.CER C1608 JB 1E 104K-T | B | 35.5/20.6 |
| C15 | 4030011600 | S.CER C1608 JB 1E 104K-T | B | 22.7/18.9 |
| C16 | 4030011600 | S.CER C1608 JB 1E 104K-T | B | 34.2/18.4 |
| C17 | 4030011600 | S.CER C1608 JB 1E 104K-T | T | 43.5/20 |
| C18 | 4030011600 | S.CER C1608 JB 1E 104K-T | B | 22.7/15.7 |
| C19 | 4030011600 | S.CER C1608 JB 1E 104K-T | B | 34.2/14.9 |
| C20 | 4030011600 | S.CER C1608 JB 1E 104K-T | B | 23.3/13.8 |
| C21 | 4030011600 | S.CER C1608 JB 1E 104K-T | B | 24.6/13.8 |
| C22 | 4030011600 | S.CER C1608 JB 1E 104K-T | B | 28.1/13.8 |
| C23 | 4030011600 | S.CER C1608 JB 1E 104K-T | B | 32.6/13.1 |
| C24 | 4030011600 | S.CER C1608 JB 1E 104K-T | B | 35.2/13.1 |
| C25 | 4030011600 | S.CER C1608 JB 1E 104K-T | B | 17.3/6.7 |
| C26 | 4030011600 | S.CER C1608 JB 1E 104K-T | B | 33.1/6.3 |
| C27 | 4030011600 | S.CER C1608 JB 1E 104K-T | B | 42.4/11.1 |
| C28 | 4030011600 | S.CER C1608 JB 1E 104K-T | B | 15/8.1 |
| C29 | 4030011600 | S.CER C1608 JB 1E 104K-T | B | 40.9/6.6 |
| C30 | 4030011600 | S.CER C1608 JB 1E 104K-T | T | 35.2/5 |
| C31 | 4030011600 | S.CER C1608 JB 1E 104K-T | T | 28.5/5.2 |

## [DSP-TX BOARD]

| REF NO. | ORDER NO. | DESCRIPTION | M. | H/V LOCATION |
|---|---|---|---|---|
| C32 | 4030011600 | S.CER C1608 JB 1E 104K-T | T | 37.8/5 |
| C33 | 4030011600 | S.CER C1608 JB 1E 104K-T | T | 18.6/35.5 |
| C34 | 4030011600 | S.CER C1608 JB 1E 104K-T | T | 37.5/35.5 |
| C35 | 4030011600 | S.CER C1608 JB 1E 104K-T | B | 26/32.9 |
| C36 | 4030011600 | S.CER C1608 JB 1E 104K-T | B | 29.3/32.9 |
| C37 | 4030011600 | S.CER C1608 JB 1E 104K-T | B | 36.8/32.9 |
| C38 | 4030011600 | S.CER C1608 JB 1E 104K-T | B | 15.2/27.7 |
| C39 | 4030011600 | S.CER C1608 JB 1E 104K-T | B | 22.4/32.9 |
| C40 | 4030011600 | S.CER C1608 JB 1E 104K-T | B | 26.1/25.8 |
| C41 | 4030011600 | S.CER C1608 JB 1E 104K-T | B | 22/25.8 |
| C42 | 4030011600 | S.CER C1608 JB 1E 104K-T | B | 27.4/25.8 |
| C43 | 4030011600 | S.CER C1608 JB 1E 104K-T | B | 32.5/25.8 |
| C44 | 4030011600 | S.CER C1608 JB 1E 104K-T | B | 35.1/25.8 |
| C45 | 4030011600 | S.CER C1608 JB 1E 104K-T | B | 42.2/26.8 |
| C46 | 4030011600 | S.CER C1608 JB 1E 104K-T | B | 15.3/24.9 |
| C47 | 4030011600 | S.CER C1608 JB 1E 104K-T | T | 43.5/29 |
| C48 | 4030011600 | S.CER C1608 JB 1E 104K-T | B | 22.7/21.5 |
| C49 | 4030011600 | S.CER C1608 JB 1E 104K-T | B | 42.4/17.9 |
| C50 | 4030011600 | S.CER C1608 JB 1E 104K-T | B | 22.7/17.6 |
| C51 | 4030011600 | S.CER C1608 JB 1E 104K-T | B | 35.5/17.5 |
| C52 | 4030011600 | S.CER C1608 JB 1E 104K-T | B | 15/11.5 |
| C53 | 4030011600 | S.CER C1608 JB 1E 104K-T | B | 22/13.8 |
| C54 | 4030011600 | S.CER C1608 JB 1E 104K-T | T | 43.3/9.9 |
| C55 | 4030011600 | S.CER C1608 JB 1E 104K-T | B | 29.4/13.8 |
| C56 | 4030011600 | S.CER C1608 JB 1E 104K-T | B | 25.1/6.6 |
| C57 | 4030011600 | S.CER C1608 JB 1E 104K-T | B | 29.8/6.2 |
| C58 | 4030011600 | S.CER C1608 JB 1E 104K-T | B | 38.3/6.6 |
| C59 | 4030011600 | S.CER C1608 JB 1E 104K-T | T | 20.3/5.3 |
| C60 | 4510007130 | S.ELE EEFCD 0J 470R | T | 25.4/41.7 |
| C61 | 4550007480 | S.TAN F930J106MAABMA | B | 45.2/29.7 |
| C62 | 4510007130 | S.ELE EEFCD 0J 470R | T | 19.5/41.7 |
| C101 | 4030011600 | S.CER C1608 JB 1E 104K-T | B | 35.7/6.5 |
| C102 | 4550007480 | S.TAN F930J106MAABMA | B | 30.6/2.6 |
| C151 | 4030011600 | S.CER C1608 JB 1E 104K-T | B | 45.5/10.2 |
| C152 | 4030007030 | S.CER C1608 CH 1H 150J-T | B | 46.1/6.2 |
| C153 | 4030007030 | S.CER C1608 CH 1H 150J-T | B | 43.1/8 |
| C171 | 4030011600 | S.CER C1608 JB 1E 104K-T | T | 41.3/2.7 |
| C181 | 4030011600 | S.CER C1608 JB 1E 104K-T | T | 31/4.3 |
| C191 | 4030011600 | S.CER C1608 JB 1E 104K-T | T | 22.6/1.2 |
| C201 | 4030011600 | S.CER C1608 JB 1E 104K-T | B | 42.3/44.3 |
| C301 | 4550007660 | S.TAN F931E105MAABMA | B | 80.4/44.1 |
| C302 | 4550007500 | S.TAN F931D106MBABMA | B | 75.6/44.1 |
| C303 | 4030011600 | S.CER C1608 JB 1E 104K-T | T | 75.7/40.7 |
| C304 | 4550007500 | S.TAN F931D106MBABMA | B | 71.5/44.1 |
| C305 | 4030011600 | S.CER C1608 JB 1E 104K-T | T | 67.6/46.1 |
| C306 | 4030007050 | S.CER C1608 CH 1H 220J-T | T | 72.3/39.8 |
| C341 | 4550007500 | S.TAN F931D106MBABMA | B | 74/34.6 |
| C342 | 4030011600 | S.CER C1608 JB 1E 104K-T | T | 75.5/32.8 |
| C343 | 4550007500 | S.TAN F931D106MBABMA | B | 66.9/36.8 |
| C344 | 4030011600 | S.CER C1608 JB 1E 104K-T | T | 67.2/38.4 |
| C345 | 4550007660 | S.TAN F931E105MAABMA | B | 76.8/38.7 |
| C346 | 4030007140 | S.CER C1608 CH 1H 121J-T | T | 68.5/33.9 |
| C347 | 4030011600 | S.CER C1608 JB 1E 104K-T | T | 67.7/35.9 |
| C348 | 4030007050 | S.CER C1608 CH 1H 220J-T | T | 72/30.6 |
| C371 | 4550007500 | S.TAN F931D106MBABMA | B | 59.8/43.8 |
| C372 | 4030011600 | S.CER C1608 JB 1E 104K-T | T | 63.7/42.9 |
| C373 | 4550007500 | S.TAN F931D106MBABMA | B | 50.1/43.9 |
| C374 | 4030011600 | S.CER C1608 JB 1E 104K-T | T | 53.4/45.5 |
| C375 | 4550007660 | S.TAN F931E105MAABMA | B | 66/43.7 |
| C376 | 4030007140 | S.CER C1608 CH 1H 121J-T | T | 56/43.1 |
| C377 | 4030011600 | S.CER C1608 JB 1E 104K-T | T | 55.3/45 |
| C378 | 4030007050 | S.CER C1608 CH 1H 220J-T | T | 59.4/39.8 |
| C401 | 4550007480 | S.TAN F930J106MAABMA | B | 54.9/43.8 |
| C402 | 4030017840 | S.CER C2012 CH 1H 222J-T | T | 58.1/37.6 |
| C403 | 4550007480 | S.TAN F930J106MAABMA | B | 63.1/35.2 |
| C404 | 4030011810 | S.CER C1608 JB 1A 224K-T | T | 61.5/37.4 |
| C405 | 4550007480 | S.TAN F930J106MAABMA | B | 58.3/36 |
| C406 | 4030011810 | S.CER C1608 JB 1A 224K-T | T | 64.5/32 |
| C407 | 4550007480 | S.TAN F930J106MAABMA | B | 51.1/36.1 |
| C408 | 4030011600 | S.CER C1608 JB 1E 104K-T | T | 54.1/37.4 |
| C410 | 4030009000 | S.CER C2012 JB 1C 224K-T | T | 61/24 |
| C411 | 4550007480 | S.TAN F930J106MAABMA | B | 62.5/28.3 |
| C412 | 4550007480 | S.TAN F930J106MAABMA | B | 58.3/29.9 |
| C413 | 4030009000 | S.CER C2012 JB 1C 224K-T | T | 64.7/28.6 |
| C414 | 4030011600 | S.CER C1608 JB 1E 104K-T | T | 54.2/24.5 |
| C415 | 4550007520 | S.TAN F931A106MAABMA | B | 52.6/29.2 |
| C416 | 4550007480 | S.TAN F930J106MAABMA | B | 56.1/24.4 |
| C417 | 4030017840 | S.CER C2012 CH 1H 222J-T | T | 57.4/24 |
| C450 | 4030011600 | S.CER C1608 JB 1E 104K-T | T | 44.2/39.7 |
| C451 | 4030011600 | S.CER C1608 JB 1E 104K-T | T | 42.9/37.8 |
| C452 | 4030006860 | S.CER C1608 JB 1H 102K-T | T | 42.9/41.9 |
| C453 | 4030007050 | S.CER C1608 CH 1H 220J | B | 45.8/36.8 |
| C551 | 4030011600 | S.CER C1608 JB 1E 104K-T | T | 48/1.7 |
| C552 | 4550007520 | S.TAN F931A106MAABMA | B | 49.8/3.3 |
| C553 | 4550007520 | S.TAN F931A106MAABMA | B | 57.2/8.9 |
| C554 | 4550007520 | S.TAN F931A106MAABMA | B | 55/3.3 |
| C555 | 4030011600 | S.CER C1608 JB 1E 104K-T | T | 58.6/2.5 |
| C556 | 4030011600 | S.CER C1608 JB 1E 104K-T | T | 58.6/5.8 |
| C557 | 4030011600 | S.CER C1608 JB 1E 104K-T | B | 57.7/4.1 |
| C601 | 4550007660 | S.TAN F931E105MAABMA | B | 50.5/9.4 |
| C602 | 4030018510 | S.CER C2012 CH 1H 682J-T | T | 48.3/14.2 |
| C603 | 4550007500 | S.TAN F931D106MBABMA | B | 50.4/15.8 |
| C604 | 4030011600 | S.CER C1608 JB 1E 104K-T | T | 49.6/11.8 |
| C605 | 4030011600 | S.CER C1608 JB 1E 104K-T | T | 52.7/11.8 |
| C606 | 4550007500 | S.TAN F931D106MBABMA | B | 51/20.8 |
| C607 | 4030018510 | S.CER C2012 CH 1H 682J-T | T | 53.2/20.1 |
| C608 | 4030007050 | S.CER C1608 CH 1H 220J-T | T | 57.6/14.5 |
| C651 | 4550007660 | S.TAN F931E105MAABMA | B | 60/8.9 |
| C652 | 4030018510 | S.CER C2012 CH 1H 682J-T | T | 60.1/5.3 |
| C653 | 4550007500 | S.TAN F931D106MBABMA | B | 62.5/3.3 |
| C654 | 4030011600 | S.CER C1608 JB 1E 104K-T | T | 62.5/1.6 |
| C655 | 4030011600 | S.CER C1608 JB 1E 104K-T | T | 69.8/1.6 |
| C656 | 4550007500 | S.TAN F931D106MBABMA | B | 63.6/9.2 |
| C657 | 4030018510 | S.CER C2012 CH 1H 682J-T | T | 66.4/10 |

M.=Mounted side (T: Mounted on the Top side, B: Mounted on the Bottom side)
S.=Surface mount

## [DSP-TX BOARD]

| REF NO. | ORDER NO. | DESCRIPTION | | M. | H/V LOCATION |
|---|---|---|---|---|---|
| C658 | 4030007050 | S.CER | C1608 CH 1H 220J-T | T | 69.9/4.4 |
| C701 | 4030017840 | S.CER | C2012 CH 1H 222J-T | T | 62.1/18.5 |
| C702 | 4030017840 | S.CER | C2012 CH 1H 222J-T | T | 59.2/11.1 |
| C703 | 4550007500 | S.TAN | F931D106MBABMA | B | 58.7/15.3 |
| C704 | 4030011600 | S.CER | C1608 JB 1E 104K-T | T | 62.4/11.3 |
| C705 | 4030011600 | S.CER | C1608 JB 1E 104K-T | T | 65.5/18.2 |
| C706 | 4550007500 | S.TAN | F931D106MBABMA | B | 57.7/19.3 |
| C707 | 4030007050 | S.CER | C1608 CH 1H 220J-T | T | 67.8/14.1 |
| C801 | 4030006860 | S.CER | C1608 JB 1H 102K-T | T | 64.2/24.6 |
| C802 | 4030011600 | S.CER | C1608 JB 1E 104K-T | T | 73.3/25 |
| C803 | 4550007480 | S.TAN | F930J106MAABMA | B | 76.7/16.6 |
| C804 | 4030011600 | S.CER | C1608 JB 1E 104K-T | T | 72/27.9 |
| C805 | 4550007520 | S.TAN | F931A106MAABMA | B | 67.2/28.6 |
| C806 | 4030011600 | S.CER | C1608 JB 1E 104K-T | T | 72.5/23.1 |
| C807 | 4550007500 | S.TAN | F931D106MBABMA | B | 68.4/23.6 |
| C808 | 4030007050 | S.CER | C1608 CH 1H 220J-T | T | 69/30.4 |
| C831 | 4030006860 | S.CER | C1608 JB 1H 102K-T | T | 69.7/17.9 |
| C832 | 4030011600 | S.CER | C1608 JB 1E 104K-T | T | 76.5/16.3 |
| C833 | 4550007480 | S.TAN | F930J106MAABMA | B | 69.7/16.8 |
| C834 | 4030011600 | S.CER | C1608 JB 1E 104K-T | T | 77.8/17.2 |
| C835 | 4550007520 | S.TAN | F931A106MAABMA | B | 64/19.7 |
| C836 | 4030011600 | S.CER | C1608 JB 1E 104K-T | T | 76.5/13.7 |
| C837 | 4550007500 | S.TAN | F931D106MBABMA | B | 64.7/15.3 |
| C838 | 4030007050 | S.CER | C1608 CH 1H 220J-T | T | 73.6/20.5 |
| C871 | 4550007520 | S.TAN | F931A106MAABMA | B | 75.5/29.4 |
| C872 | 4030011600 | S.CER | C1608 JB 1E 104K-T | T | 73.5/27.9 |
| C873 | 4550007500 | S.TAN | F931D106MBABMA | B | 75.6/24.3 |
| C874 | 4030011600 | S.CER | C1608 JB 1E 104K-T | T | 78.2/21.5 |
| C875 | 4030007050 | S.CER | C1608 CH 1H 220J-T | T | 77.2/30.9 |
| C921 | 4550007510 | S.TAN | F931C106MBABMA | B | 69.3/3.8 |
| C922 | 4030011600 | S.CER | C1608 JB 1E 104K-T | T | 72.8/3.5 |
| C923 | 4550002830 | S.TAN | TEESVD2 1V 685M12R | B | 75.4/6 |
| C924 | 4030011600 | S.CER | C1608 JB 1E 104K-T | T | 81.8/8 |
| C925 | 4550007510 | S.TAN | F931C106MBABMA | B | 71.1/9.3 |
| C926 | 4030011600 | S.CER | C1608 JB 1E 104K-T | T | 72.8/9 |
| C927 | 4550002830 | S.TAN | TEESVD2 1V 685M12R | B | 80.7/6 |
| C928 | 4030011600 | S.CER | C1608 JB 1E 104K-T | T | 81.8/4.6 |
| C961 | 4030011600 | S.CER | C1608 JB 1E 104K-T | B | 11.4/14.9 |
| C962 | 4550007520 | S.TAN | F931A106MAABMA | B | 12.2/18.6 |
| C963 | 4030011600 | S.CER | C1608 JB 1E 104K-T | B | 10.4/24.8 |
| C964 | 4550007520 | S.TAN | F931A106MAABMA | B | 11.4/28.9 |
| J921 | 6910013900 | CNR | IMSA-9180S-22A | | |
| J961 | 6910012460 | CNR | IMSA-9180S-30A | | |

## [SCOPE BOARD]

| REF NO. | ORDER NO. | DESCRIPTION | | M. | H/V LOCATION |
|---|---|---|---|---|---|
| IC1 | 1110006180 | S.IC | UPG2009TB-E3 | T | 85.1/9.6 |
| IC2 | 1180001771 | S.IC | TA79L05F (TE12L,F) | T | 24.5/95.6 |
| IC31 | 1110006180 | S.IC | UPG2009TB-E3 | T | 86.5/14.1 |
| IC201 | 1180002650 | S.REG | SI-3012KS-TL | T | 116.4/64.6 |
| IC401 | 1110006131 | S.IC | uPC4094G2-E1-A | T | 15.6/88.6 |
| IC403 | 1110006131 | S.IC | uPC4094G2-E1-A | T | 26.9/88.6 |
| IC404 | 1110006131 | S.IC | uPC4094G2-E1-A | T | 44/87.6 |
| IC405 | 1110002700 | S.IC | NJM2904M-TE1-#FMZB | T | 39.2/70.4 |
| IC501 | 1190002031 | S.IC | AD7650ASTZ | T | 55.5/79.2 |
| IC502 | 1130006891 | S.IC | TC7S04FU (TE85R,F) | T | 57.7/88 |
| IC505 | 1180002631 | S.REG | AD1582BRTZ-REEL7 | T | 55.4/94.6 |
| IC601 | 1140012221 | S.IC | TMS320C6711DZDP200 | T | 88.4/81.4 |
| IC602 | 1130011930 | S.IC | SN74LVC1G04DCKR | T | 68.2/67.4 |
| IC603 | 1130011930 | S.IC | SN74LVC1G04DCKR | T | 70.7/70.3 |
| IC604 | 1130008041 | S.IC | TC7SH04FU (TE85L,JF) | B | 67.4/74.6 |
| IC607 | 1110006411 | S.IC | R3111N111A-TR-F | B | 104.1/81.1 |
| IC671 | 1130012394 | S.IC | AT49BV001AN-55TU | T | 112.8/82.9 |
| IC801 | 1130009230 | S.IC | LMX2306TMX/NOPB | T | 65.6/36.5 |
| IC803 | 1130009691 | S.IC | TC74HCT7007AF (F) | B | 68/29 |
| IC820 | 1190001961 | S.IC | AD9857ASTZ | T | 93.7/35.6 |
| IC903 | 1120002921 | S.IC | ADM202EARNZ | T | 96.9/109.1 |
| IC904 | 1130005721 | S.IC | TC7W04F (TE12L,F) | T | 107.5/113 |
| IC905 | 1130005252 | S.IC | TC74HC08AF (EL,F) | B | 97/109.6 |
| IC906 | 1130009831 | S.IC | TC74VHCT04AF (F) | B | 108.4/109.6 |
| Q1 | 1530002060 | S.TR | 2SC4081 T106 R | T | 67.4/6.3 |
| Q2 | 1530003851 | S.TR | 2SC5551A-F-E | T | 45.7/7.4 |
| Q11 | 1590000680 | S.TR | DTC114EUA T106 | T | 78.2/7.4 |
| Q12 | 1590000680 | S.TR | DTC114EUA T106 | T | 92.1/6.5 |
| Q31 | 1590000680 | S.TR | DTC114EUA T106 | T | 78.4/3.5 |
| Q32 | 1590000680 | S.TR | DTC114EUA T106 | T | 92.7/3.5 |
| Q33 | 1590000680 | S.TR | DTC114EUA T106 | T | 93/15.3 |
| Q101 | 1530003151 | S.TR | 2SC4673D-TD-E | T | 28.8/18.2 |
| Q201 | 1560000561 | S.FET | 2SK882-GR (TE85L,F) | T | 11.4/40.4 |
| Q202 | 1560000561 | S.FET | 2SK882-GR (TE85L,F) | T | 10.1/45.2 |
| Q301 | 1530003151 | S.TR | 2SC4673D-TD-E | T | 21.4/67.9 |
| Q701 | 1530003221 | S.TR | 2SC4406-4-TL-E | T | 75.3/54.2 |
| Q720 | 1530003221 | S.TR | 2SC4406-4-TL-E | T | 101.9/45.5 |
| Q810 | 1530003221 | S.TR | 2SC4406-4-TL-E | T | 73.1/37.7 |
| Q821 | 1560000331 | S.FET | 2SK210-GR (TE85R,F) | T | 43.3/45.7 |
| Q841 | 1530002060 | S.TR | 2SC4081 T106 R | T | 41.5/37.2 |
| Q842 | 1530003432 | S.TR | 2SC5226A-4-TL-E | T | 27.4/31.6 |
| Q843 | 1530003432 | S.TR | 2SC5226A-4-TL-E | T | 25/39.9 |
| Q872 | 1590000680 | S.TR | DTC114EUA T106 | T | 30.2/32.6 |
| Q903 | 1530002280 | S.TR | 2SC4081 T106 S | B | 130.2/111.8 |
| Q904 | 1510000510 | S.TR | 2SA1576A T106R | B | 126.1/105.7 |
| Q921 | 1590001330 | S.TR | DTA114EUA T106 | T | 54.5/112.7 |
| Q922 | 1590000680 | S.TR | DTC114EUA T106 | T | 50.7/112.7 |
| Q923 | 1590001330 | S.TR | DTA114EUA T106 | T | 42.9/113.5 |
| Q924 | 1590000680 | S.TR | DTC114EUA T106 | T | 40.3/113.5 |
| D1 | 1750000971 | S.DIO | CPH5513-TL-E | T | 79.7/14.9 |
| D2 | 1750000971 | S.DIO | CPH5513-TL-E | T | 72.5/15.9 |
| D3 | 1750000441 | S.DIO | 1SV263-TL-E | T | 72.1/12.8 |
| D4 | 1750000431 | S.DIO | HSB88WSTR-E | T | 10.3/68.3 |
| D11 | 1790000620 | S.DIO | MA77 (TX) | T | 83.2/4.5 |
| D12 | 1790000620 | S.DIO | MA77 (TX) | T | 87.2/4.5 |
| D101 | 1750000431 | S.DIO | HSB88WSTR-E | T | 25.7/8.2 |
| D201 | 1710000840 | S.DIO | 1SR154-400 TE25 | B | 120.3/65 |
| D401 | 1790001250 | S.DIO | MA2S1110G-(TX) | T | 41.2/77.1 |
| D402 | 1790001250 | S.DIO | MA2S1110G-(TX) | T | 39.9/75.2 |
| D403 | 1790001250 | S.DIO | MA2S1110G-(TX) | T | 33.4/69.5 |
| D821 | 1750000681 | S.VCP | 1SV232 (TPH2,F) | T | 57.9/43.2 |
| D822 | 1750000681 | S.VCP | 1SV232 (TPH2,F) | T | 57.9/44.9 |
| D902 | 1750000550 | S.DIO | 1SS355 TE-17 | B | 129.7/109.5 |
| FI201 | 2030000290 | S.MLH | FL-357 (45 MHz) | T | 9.3/29.6 |
| FI501 | 2040000790 | S.LC | EXCCET103U | T | 71.2/76 |
| L1 | 6200001831 | S.COL | NLV32T-100J | T | 76.3/12.8 |
| L2 | 6200001831 | S.COL | NLV32T-100J | T | 75.1/19.1 |
| L3 | 6200001831 | S.COL | NLV32T-100J | B | 70.7/15.1 |
| L4 | 6200001831 | S.COL | NLV32T-100J | T | 67.3/12.1 |
| L5 | 6150004280 | COL | LS-484B (C-14927) | | |
| L6 | 6150004280 | COL | LS-484B (C-14927) | | |
| L7 | 6200003261 | S.COL | NLV32T-101J | T | 52/16.6 |
| L8 | 6140003790 | COL | LR-442 | | |
| L9 | 6200001831 | S.COL | NLV32T-100J | T | 41.2/7.5 |
| L10 | 6200001831 | S.COL | NLV32T-100J | T | 41.2/3.2 |
| L11 | 6200001831 | S.COL | NLV32T-100J | T | 57.3/3.5 |
| L12 | 6200010450 | S.COL | C2520C-R82G-A (0.82U) | T | 57.6/15.5 |
| L13 | 6200010940 | S.COL | C2520C-39NG-A | T | 68.3/20 |
| L14 | 6200010860 | S.COL | C2520C-R10G-A (0.1U) | T | 64.1/19.2 |
| L31 | 6200001831 | S.COL | NLV32T-100J | B | 82.6/1.8 |
| L32 | 6200001831 | S.COL | NLV32T-100J | B | 78.8/5.2 |
| L33 | 6200001831 | S.COL | NLV32T-100J | B | 86.6/6 |
| L34 | 6200001831 | S.COL | NLV32T-100J | B | 90.7/3.6 |
| L51 | 6200001831 | S.COL | NLV32T-100J | B | 120.5/26 |
| L52 | 6200001831 | S.COL | NLV32T-100J | B | 126.5/39.4 |
| L53 | 6200001831 | S.COL | NLV32T-100J | T | 47.7/64.3 |
| L54 | 6200001831 | S.COL | NLV32T-100J | T | 50.7/64.3 |
| L55 | 6200003950 | S.COL | HF50ACC 322513-T | B | 119.3/33.5 |
| L56 | 6200003950 | S.COL | HF50ACC 322513-T | T | 116.1/44.6 |
| L57 | 6200003950 | S.COL | HF50ACC 322513-T | T | 121.2/27.1 |
| L58 | 6200003950 | S.COL | HF50ACC 322513-T | B | 119.3/39.1 |
| L59 | 6200003950 | S.COL | HF50ACC 322513-T | T | 119.6/34.4 |
| L60 | 6200003950 | S.COL | HF50ACC 322513-T | T | 119.6/37.6 |
| L101 | 6140003530 | COL | LR-395 | | |
| L102 | 6140003530 | COL | LR-395 | | |
| L103 | 6200003021 | S.COL | NLV32T-R33J | T | 22.3/19.7 |

M.=Mounted side (T: Mounted on the Top side, B: Mounted on the Bottom side)
S.=Surface mount

## [SCOPE UNIT]

| REF NO. | ORDER NO. | DESCRIPTION | | M. | H/V LOCATION |
|---|---|---|---|---|---|
| L104 | 6200001920 | S.COL | ELJNC R15K-F | B | 22.7/16.4 |
| L201 | 6150004250 | COL | LS-471A (C-14922) | | |
| L202 | 6150004280 | COL | LS-484B (C-14927) | | |
| L203 | 6150004280 | COL | LS-484B (C-14927) | | |
| L204 | 6200001831 | S.COL | NLV32T-100J | B | 3.3/46.6 |
| L205 | 6200002431 | S.COL | NLV25T-082J | B | 10.4/17.6 |
| L301 | 6140003530 | COL | LR-395 | | |
| L302 | 6140003530 | COL | LR-395 | | |
| L303 | 6200003041 | S.COL | NLV32T-R68J | T | 21/74.1 |
| L304 | 6200001831 | S.COL | NLV32T-100J | B | 23.2/72.6 |
| L401 | 6200003171 | S.COL | NLV32T-330J | T | 10.4/83.2 |
| L501 | 6200001831 | S.COL | NLV32T-100J | T | 53.8/64.3 |
| L502 | 6200001831 | S.COL | NLV32T-100J | B | 57.6/69.6 |
| L551 | 6180003501 | S.COL | SLF6028T-100M1R3-PF | T | 105.8/64.4 |
| L552 | 6200001831 | S.COL | NLV32T-100J | T | 106.3/69.9 |
| L671 | 6200001831 | S.COL | NLV32T-100J | T | 110.9/69.9 |
| L701 | 6200005491 | S.COL | NLV32T-331J | T | 76/51.4 |
| L720 | 6200001831 | S.COL | NLV32T-100J | T | 82/34.6 |
| L721 | 6200001831 | S.COL | NLV32T-100J | T | 109.4/41 |
| L722 | 6200001831 | S.COL | NLV32T-100J | T | 110.8/45.2 |
| L761 | 6200003011 | S.COL | NLV32T-R27J | T | 106.3/22.3 |
| L762 | 6200003021 | S.COL | NLV32T-R33J | T | 102.7/23 |
| L763 | 6200003251 | S.COL | NLV32T-R39J | T | 97.9/22.4 |
| L764 | 6200003251 | S.COL | NLV32T-R39J | T | 93.6/23.4 |
| L801 | 6200005491 | S.COL | NLV32T-331J | T | 69.7/40.9 |
| L802 | 6200005491 | S.COL | NLV32T-331J | T | 70.3/26.7 |
| L821 | 6200001831 | S.COL | NLV32T-100J | T | 61.7/45.7 |
| L822 | 6190001441 | COL | #E526GN-110504 | | |
| L823 | 6200001851 | S.COL | NLV32T-5R6J | T | 40.7/42.2 |
| L825 | 6200003261 | S.COL | NLV32T-101J | T | 51.7/52.2 |
| L841 | 6200003261 | S.COL | NLV32T-101J | | B26.8/33 |
| L842 | 6200003031 | S.COL | NLV32T-R47J | T | 26.8/34.5 |
| L851 | 6200003431 | S.COL | NLV32T-R10J | T | 27.4/45 |
| L852 | 6200001471 | S.COL | NLV32T-R12J | T | 27/48.9 |
| L902 | 6200003241 | S.COL | NLV32T-221J | T | 128.1/107.7 |
| R1 | 7030003360 | S.RES | ERJ3GEYJ 221 V (220) | T | 79.6/12.5 |
| R2 | 7030003480 | S.RES | ERJ3GEYJ 222 V (2.2 k) | T | 70.7/10.8 |
| R3 | 7030003440 | S.RES | ERJ3GEYJ 102 V (1 k) | T | 70.7/9.5 |
| R4 | 7030003460 | S.RES | ERJ3GEYJ 152 V (1.5 k) | T | 67.8/8.2 |
| R5 | 7030003520 | S.RES | ERJ3GEYJ 472 V (4.7 k) | T | 66.6/4.4 |
| R6 | 7030003440 | S.RES | ERJ3GEYJ 102 V (1 k) | T | 69.4/5 |
| R7 | 7030003290 | S.RES | ERJ3GEYJ 560 V (56) | T | 49.8/17.3 |
| R8 | 7030003440 | S.RES | ERJ3GEYJ 102 V (1 k) | T | 48.4/3.5 |
| R9 | 7030003500 | S.RES | ERJ3GEYJ 332 V (3.3 k) | T | 46/4.2 |
| R11 | 7310005550 | S.TRI | TMC3ADCJ4X 22K | T | 61.7/3.8 |
| R12 | 7030003320 | S.RES | ERJ3GEYJ 101 V (100) | T | 46.7/10.6 |
| R14 | 7030003340 | S.RES | ERJ3GEYJ 151 V (150) | T | 82.3/2.4 |
| R16 | 7030003440 | S.RES | ERJ3GEYJ 102 V (1 k) | T | 80.2/6.7 |
| R17 | 7030003440 | S.RES | ERJ3GEYJ 102 V (1 k) | T | 81.5/6.7 |
| R18 | 7030003340 | S.RES | ERJ3GEYJ 151 V (150) | T | 87.4/2.4 |
| R20 | 7030003440 | S.RES | ERJ3GEYJ 102 V (1 k) | T | 90.2/6.7 |
| R21 | 7030003440 | S.RES | ERJ3GEYJ 102 V (1 k) | T | 88.9/6.7 |
| R34 | 7030003440 | S.RES | ERJ3GEYJ 102 V (1 k) | T | 78.4/5.5 |
| R35 | 7030003440 | S.RES | ERJ3GEYJ 102 V (1 k) | T | 89.4/3.5 |
| R36 | 7030003520 | S.RES | ERJ3GEYJ 472 V (4.7 k) | T | 91/14.7 |
| R37 | 7030003500 | S.RES | ERJ3GEYJ 332 V (3.3 k) | T | 89.7/14.7 |
| R38 | 7030003520 | S.RES | ERJ3GEYJ 472 V (4.7 k) | T | 82/13.9 |
| R39 | 7030003500 | S.RES | ERJ3GEYJ 332 V (3.3 k) | T | 83.3/13.9 |
| R51 | 7030003520 | S.RES | ERJ3GEYJ 472 V (4.7 k) | T | 80.6/9.8 |
| R52 | 7030003520 | S.RES | ERJ3GEYJ 472 V (4.7 k) | T | 90.3/9.9 |
| R53 | 7030003320 | S.RES | ERJ3GEYJ 101 V (100) | B | 126/32.3 |
| R54 | 7030003500 | S.RES | ERJ3GEYJ 332 V (3.3 k) | T | 81.9/9.8 |
| R55 | 7030003500 | S.RES | ERJ3GEYJ 332 V (3.3 k) | T | 88.4/9.8 |
| R61 | 7030003320 | S.RES | ERJ3GEYJ 101 V (100) | B | 128.7/49 |
| R62 | 7030003320 | S.RES | ERJ3GEYJ 101 V (100) | T | 122.3/50.4 |
| R63 | 7030003320 | S.RES | ERJ3GEYJ 101 V (100) | B | 128.7/51 |
| R64 | 7030003320 | S.RES | ERJ3GEYJ 101 V (100) | T | 122.3/53.3 |
| R65 | 7030003320 | S.RES | ERJ3GEYJ 101 V (100) | B | 128.7/53 |
| R66 | 7030003320 | S.RES | ERJ3GEYJ 101 V (100) | T | 123.6/56.7 |
| R71 | 7030003320 | S.RES | ERJ3GEYJ 101 V (100) | B | 128.7/55 |
| R72 | 7030003320 | S.RES | ERJ3GEYJ 101 V (100) | T | 121.7/47.4 |
| R73 | 7030003320 | S.RES | ERJ3GEYJ 101 V (100) | T | 121.7/43.3 |
| R74 | 7030003320 | S.RES | ERJ3GEYJ 101 V (100) | B | 128.7/43.4 |
| R75 | 7030003320 | S.RES | ERJ3GEYJ 101 V (100) | T | 121.7/44.7 |
| R76 | 7030003320 | S.RES | ERJ3GEYJ 101 V (100) | B | 128.7/45.4 |
| R77 | 7030003320 | S.RES | ERJ3GEYJ 101 V (100) | T | 121.7/46 |
| R81 | 7030010520 | S.RES | ERJ1TYJ 101U (100) | B | 122.9/46.2 |
| R103 | 7030003480 | S.RES | ERJ3GEYJ 222 V (2.2 k) | T | 33.8/18 |
| R104 | 7030003320 | S.RES | ERJ3GEYJ 101 V (100) | T | 25.9/21.9 |
| R105 | 7030003370 | S.RES | ERJ3GEYJ 271 V (270) | B | 18.3/14.3 |
| R106 | 7030003230 | S.RES | ERJ3GEYJ 180 V (18) | B | 19.1/11.9 |
| R107 | 7030003370 | S.RES | ERJ3GEYJ 271 V (270) | B | 18.3/8.4 |
| R108 | 7030003370 | S.RES | ERJ3GEYJ 271 V (270) | B | 14.6/8.4 |
| R109 | 7030003230 | S.RES | ERJ3GEYJ 180 V (18) | B | 11.2/9.7 |
| R110 | 7030003370 | S.RES | ERJ3GEYJ 271 V (270) | B | 11.2/12 |
| R111 | 7030003550 | S.RES | ERJ3GEYJ 822 V (8.2 k) | T | 29.8/14.9 |
| R112 | 7030003320 | S.RES | ERJ3GEYJ 101 V (100) | T | 33.8/19.3 |
| R113 | 7030003860 | S.RES | ERJ3GE JPW V | B | 19.5/18 |
| R201 | 7030003430 | S.RES | ERJ3GEYJ 821 V (820) | T | 11.3/37.1 |
| R202 | 7030003430 | S.RES | ERJ3GEYJ 821 V (820) | T | 11.3/35.8 |
| R203 | 7030003280 | S.RES | ERJ3GEYJ 470 V (47) | B | 3.1/39.8 |
| R204 | 7030003560 | S.RES | ERJ3GEYJ 103 V (10 k) | T | 12/45 |
| R205 | 7030003280 | S.RES | ERJ3GEYJ 470 V (47) | B | 6.3/46.6 |
| R206 | 7030003380 | S.RES | ERJ3GEYJ 331 V (330) | B | 11.4/54.9 |
| R207 | 7030003220 | S.RES | ERJ3GEYJ 150 V (15) | B | 9.3/55.7 |
| R208 | 7030003380 | S.RES | ERJ3GEYJ 331 V (330) | B | 10.1/57.7 |
| R209 | 7030003640 | S.RES | ERJ3GEYJ 473 V (47 k) | B | 9.9/46.6 |
| R210 | 7030003600 | S.RES | ERJ3GEYJ 223 V (22 k) | T | 112.9/63.4 |
| R301 | 7030003320 | S.RES | ERJ3GEYJ 101 V (100) | T | 9.8/86.7 |
| R302 | 7030003370 | S.RES | ERJ3GEYJ 271 V (270) | B | 10.3/75.4 |
| R303 | 7030003230 | S.RES | ERJ3GEYJ 180 V (18) | B | 15.2/74.6 |
| R304 | 7030003370 | S.RES | ERJ3GEYJ 271 V (270) | B | 19.1/75.4 |

## [SCOPE UNIT]

| REF NO. | ORDER NO. | DESCRIPTION | | M. | H/V LOCATION |
|---|---|---|---|---|---|
| R305 | 7030003320 | S.RES | ERJ3GEYJ 101 V (100) | T | 23.7/73.9 |
| R306 | 7030003480 | S.RES | ERJ3GEYJ 222 V (2.2 k) | T | 21.4/63.4 |
| R307 | 7030003550 | S.RES | ERJ3GEYJ 822 V (8.2 k) | T | 18.3/66.9 |
| R308 | 7030003340 | S.RES | ERJ3GEYJ 151 V (150) | T | 24.4/63.4 |
| R402 | 7030003440 | S.RES | ERJ3GEYJ 102 V (1 k) | B | 13.4/89.7 |
| R403 | 7030003440 | S.RES | ERJ3GEYJ 102 V (1 k) | B | 16.3/90.4 |
| R404 | 7030003440 | S.RES | ERJ3GEYJ 102 V (1 k) | B | 19/86.7 |
| R405 | 7030003440 | S.RES | ERJ3GEYJ 102 V (1 k) | B | 22.4/90.5 |
| R410 | 7030003560 | S.RES | ERJ3GEYJ 103 V (10 k) | T | 21.3/85.8 |
| R411 | 7030003560 | S.RES | ERJ3GEYJ 103 V (10 k) | T | 9.2/91.1 |
| R412 | 7030003560 | S.RES | ERJ3GEYJ 103 V (10 k) | T | 13.4/92.1 |
| R413 | 7030003730 | S.RES | ERJ3GEYJ 274 V (270 k) | T | 9.8/89.3 |
| R414 | 7030003560 | S.RES | ERJ3GEYJ 103 V (10 k) | B | 26.9/88 |
| R415 | 7030003560 | S.RES | ERJ3GEYJ 103 V (10 k) | T | 31.6/90 |
| R416 | 7310005510 | S.TRI | TMC3ADCS5X 470K | T | 34.5/87 |
| R417 | 7030003630 | S.RES | ERJ3GEYJ 393 V (39 k) | T | 43.1/95.4 |
| R418 | 7030003570 | S.RES | ERJ3GEYJ 123 V (12 k) | T | 45.4/92.2 |
| R419 | 7030003220 | S.RES | ERJ3GEYJ 150 V (15) | T | 47.9/92.3 |
| R420 | 7030003580 | S.RES | ERJ3GEYJ 153 V (15 k) | T | 40.9/81.7 |
| R421 | 7030003560 | S.RES | ERJ3GEYJ 103 V (10 k) | T | 40.5/85.5 |
| R422 | 7030003560 | S.RES | ERJ3GEYJ 103 V (10 k) | T | 42.6/92.2 |
| R423 | 7030003540 | S.RES | ERJ3GEYJ 682 V (6.8 k) | T | 43.1/94.1 |
| R425 | 7310005540 | S.TRI | TMC3ADC14X 10K | T | 45.3/81.2 |
| R426 | 7030003560 | S.RES | ERJ3GEYJ 103 V (10 k) | T | 48.7/76.5 |
| R427 | 7030003560 | S.RES | ERJ3GEYJ 103 V (10 k) | T | 39.9/77.2 |
| R428 | 7030003680 | S.RES | ERJ3GEYJ 104 V (100 k) | T | 37/75.7 |
| R429 | 7030003650 | S.RES | ERJ3GEYJ 563 V (56 k) | T | 34.7/67.7 |
| R430 | 7030003740 | S.RES | ERJ3GEYJ 334 V (330 k) | T | 38.8/73.9 |
| R431 | 7030003740 | S.RES | ERJ3GEYJ 334 V (330 k) | T | 36.2/73.9 |
| R432 | 7030003640 | S.RES | ERJ3GEYJ 473 V (47 k) | T | 39.6/81.7 |
| R433 | 7030003680 | S.RES | ERJ3GEYJ 104 V (100 k) | T | 38.8/66.4 |
| R434 | 7030003320 | S.RES | ERJ3GEYJ 101 V (100) | T | 33.4/66.9 |
| R435 | 7030003680 | S.RES | ERJ3GEYJ 104 V (100 k) | T | 40.1/66.4 |
| R436 | 7030003680 | S.RES | ERJ3GEYJ 104 V (100 k) | T | 36.9/67 |
| R437 | 7030003680 | S.RES | ERJ3GEYJ 104 V (100 k) | T | 43.8/67.7 |
| R438 | 7030003680 | S.RES | ERJ3GEYJ 104 V (100 k) | T | 43.8/70.4 |
| R500 | 7030003860 | S.RES | ERJ3GE JPW V | T | 53.2/71.7 |
| R501 | 7030003320 | S.RES | ERJ3GEYJ 101 V (100) | T | 55.1/73 |
| R502 | 7030003560 | S.RES | ERJ3GEYJ 103 V (10 k) | B | 56.3/74.6 |
| R503 | 7030003560 | S.RES | ERJ3GEYJ 103 V (10 k) | B | 59.2/75.4 |
| R504 | 7030003560 | S.RES | ERJ3GEYJ 103 V (10 k) | T | 60.8/74.2 |
| R505 | 7030003560 | S.RES | ERJ3GEYJ 103 V (10 k) | T | 61.6/76 |
| R506 | 7030003560 | S.RES | ERJ3GEYJ 103 V (10 k) | B | 57.3/78.2 |
| R507 | 7030003320 | S.RES | ERJ3GEYJ 101 V (100) | T | 61.5/87.1 |
| R509 | 7030003640 | S.RES | ERJ3GEYJ 473 V (47 k) | T | 60.5/89.8 |
| R602 | 7030003560 | S.RES | ERJ3GEYJ 103 V (10 k) | B | 101.3/75.6 |
| R603 | 7030003440 | S.RES | ERJ3GEYJ 102 V (1 k) | B | 83.7/77.3 |
| R604 | 7030003560 | S.RES | ERJ3GEYJ 103 V (10 k) | B | 92.1/67.4 |
| R605 | 7030003560 | S.RES | ERJ3GEYJ 103 V (10 k) | B | 89.8/65.8 |
| R606 | 7030003440 | S.RES | ERJ3GEYJ 102 V (1 k) | T | 79.6/95.8 |
| R607 | 7030003440 | S.RES | ERJ3GEYJ 102 V (1 k) | B | 77.6/95.9 |
| R608 | 7030003440 | S.RES | ERJ3GEYJ 102 V (1 k) | B | 71.8/88.2 |
| R609 | 7030003560 | S.RES | ERJ3GEYJ 103 V (10 k) | T | 83.5/65.8 |
| R610 | 7030003800 | S.RES | ERJ3GEYJ 105 V (1 M) | T | 70.5/67.6 |
| R611 | 7030004040 | S.RES | ERJ3GEYJ 4R7 V (4.7) | T | 66.2/70.3 |
| R612 | 7030004040 | S.RES | ERJ3GEYJ 4R7 V (4.7) | T | 67.5/70.3 |
| R615 | 7030003320 | S.RES | ERJ3GEYJ 101 V (100) | T | 72.9/65.7 |
| R616 | 7030003520 | S.RES | ERJ3GEYJ 472 V (4.7 k) | T | 73.7/93.5 |
| R617 | 7030003520 | S.RES | ERJ3GEYJ 472 V (4.7 k) | T | 72.4/93.5 |
| R618 | 7030003560 | S.RES | ERJ3GEYJ 103 V (10 k) | B | 81.8/66.8 |
| R619 | 7030003560 | S.RES | ERJ3GEYJ 103 V (10 k) | B | 88/66.8 |
| R620 | 7030003440 | S.RES | ERJ3GEYJ 102 V (1 k) | B | 73.2/88.9 |
| R621 | 7030003440 | S.RES | ERJ3GEYJ 102 V (1 k) | B | 72.6/84.7 |
| R622 | 7030003860 | S.RES | ERJ3GE JPW V | B | 111.9/79.5 |
| R623 | 7030003860 | S.RES | ERJ3GE JPW V | B | 106.1/78.5 |
| R633 | 7030003560 | S.RES | ERJ3GEYJ 103 V (10 k) | B | 74.7/74.4 |
| R634 | 7030003860 | S.RES | ERJ3GE JPW V | T | 74/70.4 |
| R635 | 7030003280 | S.RES | ERJ3GEYJ 470 V (47) | T | 73.4/68.4 |
| R636 | 7030003280 | S.RES | ERJ3GEYJ 470 V (47) | T | 72.7/70.4 |
| R701 | 7030003240 | S.RES | ERJ3GEYJ 220 V (22) | T | 73/51.7 |
| R702 | 7030003560 | S.RES | ERJ3GEYJ 103 V (10 k) | T | 77.3/54.4 |
| R703 | 7030003320 | S.RES | ERJ3GEYJ 101 V (100) | T | 72.7/55.1 |
| R704 | 7030003280 | S.RES | ERJ3GEYJ 470 V (47) | T | 73.3/57 |
| R705 | 7030003340 | S.RES | ERJ3GEYJ 151 V (150) | T | 77.4/57 |
| R720 | 7030003370 | S.RES | ERJ3GEYJ 271 V (270) | T | 107/43.2 |
| R721 | 7030003560 | S.RES | ERJ3GEYJ 103 V (10 k) | T | 104/45.3 |
| R722 | 7030003340 | S.RES | ERJ3GEYJ 151 V (150) | T | 107.2/45.9 |
| R723 | 7030003440 | S.RES | ERJ3GEYJ 102 V (1 k) | B | 91.7/28.7 |
| R724 | 7030003440 | S.RES | ERJ3GEYJ 102 V (1 k) | B | 91.1/30.6 |
| R725 | 7030003440 | S.RES | ERJ3GEYJ 102 V (1 k) | B | 87.6/28.5 |
| R726 | 7030003440 | S.RES | ERJ3GEYJ 102 V (1 k) | B | 91.2/26.8 |
| R727 | 7030003440 | S.RES | ERJ3GEYJ 102 V (1 k) | B | 94.8/43 |
| R729 | 7030003280 | S.RES | ERJ3GEYJ 470 V (47) | T | 98.7/45.6 |
| R730 | 7030003560 | S.RES | ERJ3GEYJ 103 V (10 k) | B | 96.4/40.1 |
| R731 | 7030003460 | S.RES | ERJ3GEYJ 152 V (1.5 k) | T | 105.1/38.6 |
| R732 | 7030003510 | S.RES | ERJ3GEYJ 392 V (3.9 k) | T | 106.5/34.2 |
| R734 | 7030003510 | S.RES | ERJ3GEYJ 392 V (3.9 k) | T | 102.5/42.7 |
| R735 | 7030003280 | S.RES | ERJ3GEYJ 470 V (47) | T | 106.5/30.9 |
| R736 | 7030003280 | S.RES | ERJ3GEYJ 470 V (47) | T | 106.5/32.2 |
| R737 | 7030003440 | S.RES | ERJ3GEYJ 102 V (1 k) | T | 88.4/24 |
| R738 | 7030003640 | S.RES | ERJ3GEYJ 473 V (47 k) | T | 88.1/46.1 |
| R739 | 7030003510 | S.RES | ERJ3GEYJ 392 V (3.9 k) | T | 106.5/35.5 |
| R741 | 7030003860 | S.RES | ERJ3GE JPW V | B | 109.8/26.2 |
| R742 | 7030003860 | S.RES | ERJ3GE JPW V | T | 86.8/46 |
| R744 | 7030003860 | S.RES | ERJ3GE JPW V | T | 87.7/26.2 |
| R745 | 7030003860 | S.RES | ERJ3GE JPW V | T | 85/27.5 |
| R748 | 7030003860 | S.RES | ERJ3GE JPW V | T | 89.7/24 |
| R764 | 7030003370 | S.RES | ERJ3GEYJ 271 V (270) | T | 48/21.5 |
| R765 | 7030003230 | S.RES | ERJ3GEYJ 180 V (18) | T | 45.6/20.8 |
| R766 | 7030003370 | S.RES | ERJ3GEYJ 271 V (270) | T | 43.4/21.5 |
| R767 | 7030003860 | S.RES | ERJ3GE JPW V | T | 95.7/21.5 |
| R771 | 7030003860 | S.RES | ERJ3GE JPW V | T | 41/20.8 |
| R801 | 7030003440 | S.RES | ERJ3GEYJ 102 V (1 k) | B | 68.1/38 |
| R802 | 7030003440 | S.RES | ERJ3GEYJ 102 V (1 k) | B | 71.2/35.6 |

M.=Mounted side (T: Mounted on the Top side, B: Mounted on the Bottom side)
S.=Surface mount

## [SCOPE UNIT]

| REF NO. | ORDER NO. | DESCRIPTION | M. | H/V LOCATION |
|---|---|---|---|---|
| R803 | 7030003440 | S.RES ERJ3GEYJ 102 V (1 k) | B | 68.1/35.7 |
| R806 | 7030003520 | S.RES ERJ3GEYJ 472 V (4.7 k) | T | 62.4/40.1 |
| R808 | 7030003600 | S.RES ERJ3GEYJ 223 V (22 k) | T | 61.7/42.6 |
| R809 | 7030003840 | S.RES ERJ3GEYJ 225 V (2.2 M) | T | 63.9/41.6 |
| R810 | 7030003370 | S.RES ERJ3GEYJ 271 V (270) | T | 74.1/35.2 |
| R811 | 7030003560 | S.RES ERJ3GEYJ 103 V (10 k) | T | 73.8/40.2 |
| R812 | 7030003280 | S.RES ERJ3GEYJ 470 V (47) | T | 71/31.6 |
| R813 | 7030003340 | S.RES ERJ3GEYJ 151 V (150) | T | 73.8/45.4 |
| R814 | 7030003500 | S.RES ERJ3GEYJ 332 V (3.3 k) | T | 60.3/41.1 |
| R821 | 7030003680 | S.RES ERJ3GEYJ 104 V (100 k) | T | 39.3/45.9 |
| R822 | 7030003680 | S.RES ERJ3GEYJ 104 V (100 k) | T | 46.8/44.6 |
| R823 | 7030003370 | S.RES ERJ3GEYJ 271 V (270) | T | 43.5/41.7 |
| R841 | 7030003200 | S.RES ERJ3GEYJ 100 V (10) | T | 37.9/39.9 |
| R842 | 7030003360 | S.RES ERJ3GEYJ 221 V (220) | T | 42.2/35 |
| R843 | 7030003500 | S.RES ERJ3GEYJ 332 V (3.3 k) | T | 40.1/39.1 |
| R844 | 7030003540 | S.RES ERJ3GEYJ 682 V (6.8 k) | T | 38.6/37.8 |
| R845 | 7030003360 | S.RES ERJ3GEYJ 221 V (220) | T | 38.6/36.5 |
| R846 | 7030003380 | S.RES ERJ3GEYJ 331 V (330) | T | 40.4/32 |
| R847 | 7030003370 | S.RES ERJ3GEYJ 271 V (270) | T | 30.5/30 |
| R848 | 7030003540 | S.RES ERJ3GEYJ 682 V (6.8 k) | T | 28.4/37.3 |
| R849 | 7030003500 | S.RES ERJ3GEYJ 332 V (3.3 k) | T | 30.3/34.8 |
| R850 | 7030003390 | S.RES ERJ3GEYJ 391 V (390) | T | 26.5/37.9 |
| R851 | 7030003360 | S.RES ERJ3GEYJ 221 V (220) | T | 24.4/37.1 |
| R852 | 7030003490 | S.RES ERJ3GEYJ 272 V (2.7 k) | T | 28.4/40 |
| R853 | 7030003510 | S.RES ERJ3GEYJ 392 V (3.9 k) | T | 30.3/41 |
| R854 | 7030003360 | S.RES ERJ3GEYJ 221 V (220) | T | 30.1/42.4 |
| R855 | 7030008180 | S.RES ERJ12YJ331U (330) | T | 42.5/52.9 |
| R856 | 7030003370 | S.RES ERJ3GEYJ 271 V (270) | T | 22.9/60.3 |
| R857 | 7030003230 | S.RES ERJ3GEYJ 180 V (18) | T | 20.7/59.6 |
| R858 | 7030003320 | S.RES ERJ3GEYJ 101 V (100) | T | 20.7/61.1 |
| R859 | 7030003260 | S.RES ERJ3GEYJ 330 V (33) | T | 24.4/44.2 |
| R860 | 7030003400 | S.RES ERJ3GEYJ 471 V (470) | T | 42.4/32 |
| R861 | 7030003860 | S.RES ERJ3GE JPW V | T | 24.4/60.3 |
| R905 | 7030003620 | S.RES ERJ3GEYJ 333 V (33 k) | B | 127/108.8 |
| R906 | 7030003540 | S.RES ERJ3GEYJ 682 V (6.8 k) | B | 128.6/105.8 |
| R907 | 7030003580 | S.RES ERJ3GEYJ 153 V (15 k) | B | 127.2/111.2 |
| R908 | 7030003640 | S.RES ERJ3GEYJ 473 V (47 k) | B | 124.9/108.8 |
| R913 | 7030003370 | S.RES ERJ3GEYJ 271 V (270) | T | 57.4/112.7 |
| R914 | 7030003370 | S.RES ERJ3GEYJ 271 V (270) | T | 45.9/113.5 |
| R951 | 7030003860 | S.RES ERJ3GE JPW V | B | 120.4/122.7 |
| R952 | 7030003860 | S.RES ERJ3GE JPW V | B | 97.5/126.3 |
| R953 | 7030003860 | S.RES ERJ3GE JPW V | B | 97.5/124.7 |
| R954 | 7030003860 | S.RES ERJ3GE JPW V | B | 114.7/103.6 |
| R955 | 7030003860 | S.RES ERJ3GE JPW V | T | 48.6/112.9 |
| R956 | 7030003860 | S.RES ERJ3GE JPW V | T | 39.7/110.6 |
| | | | | |
| C1 | 4030006880 | S.CER C1608 JB 1H 472K-T | T | 84.1/6.7 |
| C2 | 4030006880 | S.CER C1608 JB 1H 472K-T | T | 86.1/6.7 |
| C3 | 4030006880 | S.CER C1608 JB 1H 472K-T | T | 82.8/15.8 |
| C4 | 4030011340 | S.CER C1608 CH 1H 471J-T | T | 76.6/16.1 |
| C5 | 4030011340 | S.CER C1608 CH 1H 471J-T | T | 74.1/12.9 |
| C6 | 4030006880 | S.CER C1608 JB 1H 472K-T | T | 74.9/16.1 |
| C7 | 4030006880 | S.CER C1608 JB 1H 472K-T | T | 70.1/12.8 |
| C8 | 4030006880 | S.CER C1608 JB 1H 472K-T | T | 71.3/20 |
| C9 | 4030006880 | S.CER C1608 JB 1H 472K-T | T | 70/15.7 |
| C10 | 4030011600 | S.CER C1608 JB 1E 104K-T | T | 67.8/9.5 |
| C11 | 4030009510 | S.CER C1608 CH 1H 010B-T | B | 58.9/16.3 |
| C12 | 4030007040 | S.CER C1608 CH 1H 180J-T | B | 61.9/10 |
| C13 | 4030007040 | S.CER C1608 CH 1H 180J-T | B | 53.2/10 |
| C14 | 4030011340 | S.CER C1608 CH 1H 471J-T | B | 47.6/15 |
| C15 | 4030006880 | S.CER C1608 JB 1H 472K-T | T | 40.2/16 |
| C16 | 4030006880 | S.CER C1608 JB 1H 472K-T | T | 49.9/3.5 |
| C17 | 4030006880 | S.CER C1608 JB 1H 472K-T | B | 38.6/10 |
| C18 | 4030006960 | S.CER C1608 CH 1H 050C-T | T | 44/10.6 |
| C21 | 4030006880 | S.CER C1608 JB 1H 472K-T | T | 78.8/57 |
| C22 | 4030006880 | S.CER C1608 JB 1H 472K-T | B | 93.1/11.6 |
| C23 | 4030011600 | S.CER C1608 JB 1E 104K-T | T | 90.5/12.8 |
| C24 | 4030006880 | S.CER C1608 JB 1H 472K-T | T | 85.4/11.8 |
| C31 | 4030006880 | S.CER C1608 JB 1H 472K-T | T | 78.3/9.4 |
| C32 | 4030006880 | S.CER C1608 JB 1H 472K-T | T | 82.8/6.7 |
| C33 | 4030006880 | S.CER C1608 JB 1H 472K-T | T | 90.3/8.6 |
| C34 | 4030006880 | S.CER C1608 JB 1H 472K-T | T | 87.6/6.7 |
| C35 | 4030006900 | S.CER C1608 JB 1H 103K-T | T | 83.6/2.4 |
| C36 | 4030006900 | S.CER C1608 JB 1H 103K-T | T | 80.3/3.3 |
| C37 | 4030006900 | S.CER C1608 JB 1H 103K-T | T | 86.1/2.4 |
| C38 | 4030006900 | S.CER C1608 JB 1H 103K-T | T | 90.7/3.5 |
| C39 | 4030006860 | S.CER C1608 JB 1H 102K-T | T | 88.4/14.7 |
| C40 | 4030006860 | S.CER C1608 JB 1H 102K-T | T | 84.6/13.9 |
| C41 | 4610001830 | S.TRI TZB4S100AB10R00 | T | 57.5/19.3 |
| C42 | 4030007030 | S.CER C1608 CH 1H 150J-T | T | 68.7/15.7 |
| C43 | 4030007120 | S.CER C1608 CH 1H 820J-T | T | 67.9/17.7 |
| C44 | 4030007100 | S.CER C1608 CH 1H 560J-T | T | 67/15.7 |
| C45 | 4030007040 | S.CER C1608 CH 1H 180J-T | T | 64.9/16.4 |
| C46 | 4030008750 | S.CER C1608 CH 1H 360J-T | T | 64.9/14.9 |
| C51 | 4030006860 | S.CER C1608 JB 1H 102K-T | T | 83.2/9.8 |
| C52 | 4030006860 | S.CER C1608 JB 1H 102K-T | T | 87.1/9.8 |
| C53 | 4510008540 | S.ELE EEE1CA100SR | T | 31.7/95.8 |
| C54 | 4510008540 | S.ELE EEE1CA100SR | T | 46.9/69.3 |
| C55 | 4030011600 | S.CER C1608 JB 1E 104K-T | T | 20.4/94.8 |
| C56 | 4510008540 | S.ELE EEE1CA100SR | T | 16.6/95.8 |
| C57 | 4030011600 | S.CER C1608 JB 1E 104K-T | T | 27.9/95.9 |
| C101 | 4030006880 | S.CER C1608 JB 1H 472K-T | T | 33.8/16.7 |
| C102 | 4030007150 | S.CER C1608 CH 1H 151J-T | T | 24.6/19 |
| C103 | 4030011600 | S.CER C1608 JB 1E 104K-T | T | 24.6/21.9 |
| C106 | 4030006880 | S.CER C1608 JB 1H 472K-T | T | 33.8/20.6 |
| C107 | 4030007100 | S.CER C1608 CH 1H 560J-T | T | 23.1/16.4 |
| C108 | 4030007110 | S.CER C1608 CH 1H 680J-T | B | 23.7/21.2 |
| C109 | 4030007140 | S.CER C1608 CH 1H 121J-T | B | 22.4/18.7 |
| C110 | 4030007110 | S.CER C1608 CH 1H 680J-T | B | 21.6/21.2 |
| C201 | 4030007040 | S.CER C1608 CH 1H 180J-T | T | 10.8/24.5 |
| C202 | 4030007040 | S.CER C1608 CH 1H 180J-T | T | 4.7/30.3 |
| C204 | 4030006880 | S.CER C1608 JB 1H 472K-T | T | 11.3/34.5 |
| C205 | 4030007070 | S.CER C1608 CH 1H 330J-T | B | 5.8/39.8 |

## [SCOPE UNIT]

| REF NO. | ORDER NO. | DESCRIPTION | M. | H/V LOCATION |
|---|---|---|---|---|
| C206 | 4030006880 | S.CER C1608 JB 1H 472K-T | T | 11.3/38.5 |
| C207 | 4030006960 | S.CER C1608 CH 1H 050C-T | T | 11.2/42.3 |
| C208 | 4030007070 | S.CER C1608 CH 1H 330J-T | B | 8.4/51 |
| C209 | 4030006880 | S.CER C1608 JB 1H 472K-T | T | 7.6/46.1 |
| C210 | 4030011600 | S.CER C1608 JB 1E 104K-T | B | 2.1/50.2 |
| C211 | 4030009550 | S.CER C1608 CH 1H 2R5B-T | T | 10.8/23.2 |
| C212 | 4030006940 | S.CER C1608 CH 1H 030C-T | T | 4.7/28.9 |
| C213 | 4550007320 | S.TAN F930J226MAABMA | T | 111.2/63.3 |
| C214 | 4550007320 | S.TAN F930J226MAABMA | B | 117.7/65.4 |
| C215 | 4030011600 | S.CER C1608 JB 1E 104K-T | T | 119.9/66.4 |
| C216 | 4030017490 | S.CER C1608 JB 1A 105K-T | T | 112.9/66.4 |
| C301 | 4030007040 | S.CER C1608 CH 1H 180J-T | T | 18.8/70.5 |
| C302 | 4030006880 | S.CER C1608 JB 1H 472K-T | T | 23.7/71.1 |
| C303 | 4030006880 | S.CER C1608 JB 1H 472K-T | T | 19.9/63.4 |
| C304 | 4030006880 | S.CER C1608 JB 1H 472K-T | T | 22.9/63.4 |
| C401 | 4030008850 | S.CER C1608 JB 1H 123K-T | T | 11.1/86.7 |
| C403 | 4030018610 | S.CER C1608 CH 1H 182J-T | B | 15.6/87.5 |
| C404 | 4030018580 | S.CER C1608 CH 1H 821J-T | T | 20.9/89.2 |
| C405 | 4030007140 | S.CER C1608 CH 1H 121J-T | T | 20.9/87.9 |
| C406 | 4030017840 | S.CER C2012 CH 1H 222J-T | B | 22.6/86.7 |
| C407 | 4030017840 | S.CER C2012 CH 1H 222J-T | B | 22.6/88.7 |
| C408 | 4030007010 | S.CER C1608 CH 1H 100D-T | T | 21.6/90.5 |
| C409 | 4030007140 | S.CER C1608 CH 1H 121J-T | T | 21.6/91.8 |
| C410 | 4030011600 | S.CER C1608 JB 1E 104K-T | T | 17.7/92.1 |
| C411 | 4030011600 | S.CER C1608 JB 1E 104K-T | T | 13.4/85.2 |
| C420 | 4030011600 | S.CER C1608 JB 1E 104K-T | T | 8.5/89.3 |
| C421 | 4030006920 | S.CER C1608 CH 1H 010C-T | T | 11.1/89.3 |
| C422 | 4030006920 | S.CER C1608 CH 1H 010C-T | T | 31.6/87.2 |
| C423 | 4030011600 | S.CER C1608 JB 1E 104K-T | T | 29/92.1 |
| C424 | 4030011600 | S.CER C1608 JB 1E 104K-T | T | 24.7/85.2 |
| C425 | 4030011600 | S.CER C1608 JB 1E 104K-T | T | 40.2/95.4 |
| C426 | 4030006900 | S.CER C1608 JB 1H 103K-T | T | 47.4/89.7 |
| C427 | 4030011600 | S.CER C1608 JB 1E 104K-T | T | 35.9/81 |
| C428 | 4510008550 | S.ELE EEE1HA010SR | T | 38/92.2 |
| C429 | 4030011600 | S.CER C1608 JB 1E 104K-T | T | 47.4/85.4 |
| C431 | 4030006900 | S.CER C1608 JB 1H 103K-T | T | 38.5/77.2 |
| C432 | 4030011600 | S.CER C1608 JB 1E 104K-T | T | 41.4/73.9 |
| C433 | 4510008540 | S.ELE EEE1CA100SR | T | 31.4/73.2 |
| C434 | 4030011600 | S.CER C1608 JB 1E 104K-T | T | 40.5/88.5 |
| C501 | 4030011600 | S.CER C1608 JB 1E 104K-T | T | 52.5/73 |
| C502 | 4510008540 | S.ELE EEE1CA100SR | T | 52.2/68.5 |
| C503 | 4510008540 | S.ELE EEE1CA100SR | T | 59.3/70.5 |
| C504 | 4030011600 | S.CER C1608 JB 1E 104K-T | T | 62/78.6 |
| C505 | 4510008540 | S.ELE EEE1CA100SR | T | 59.5/64.5 |
| C506 | 4030011600 | S.CER C1608 JB 1E 104K-T | T | 61.6/81.8 |
| C507 | 4510008580 | S.ELE EEE0JA470SR | T | 51/87.4 |
| C508 | 4030017490 | S.CER C1608 JB 1A 105K-T | T | 49.3/82.9 |
| C509 | 4030011600 | S.CER C1608 JB 1E 104K-T | T | 59.6/87.9 |
| C521 | 4510009280 | S.ELE EEE1EA4R7SR | T | 59.6/93.9 |
| C522 | 4030011600 | S.CER C1608 JB 1E 104K-T | T | 55.5/92.2 |
| C523 | 4510008550 | S.ELE EEE1HA010SR | T | 51.1/93.9 |
| C524 | 4030011600 | S.CER C1608 JB 1E 104K-T | T | 55.2/97 |
| C551 | 4550006960 | S.TAN TEESVB2 0G 107M8R | T | 99.1/64.3 |
| C601 | 4030011600 | S.CER C1608 JB 1E 104K-T | B | 99.4/93.9 |
| C602 | 4030011600 | S.CER C1608 JB 1E 104K-T | B | 98.6/67.3 |
| C603 | 4030011600 | S.CER C1608 JB 1E 104K-T | B | 100.9/91.6 |
| C604 | 4030011600 | S.CER C1608 JB 1E 104K-T | B | 101.5/68.5 |
| C605 | 4030011600 | S.CER C1608 JB 1E 104K-T | B | 93.2/85.9 |
| C606 | 4030011600 | S.CER C1608 JB 1E 104K-T | B | 93.8/84.5 |
| C607 | 4030011600 | S.CER C1608 JB 1E 104K-T | B | 93/80.1 |
| C608 | 4030011600 | S.CER C1608 JB 1E 104K-T | B | 93.8/78.8 |
| C609 | 4030011600 | S.CER C1608 JB 1E 104K-T | B | 93.7/75.8 |
| C610 | 4030011600 | S.CER C1608 JB 1E 104K-T | B | 91.3/86.8 |
| C611 | 4030011600 | S.CER C1608 JB 1E 104K-T | B | 90.3/75.9 |
| C612 | 4030011600 | S.CER C1608 JB 1E 104K-T | B | 87.8/93.9 |
| C613 | 4030011600 | S.CER C1608 JB 1E 104K-T | B | 88.4/86.8 |
| C614 | 4030011600 | S.CER C1608 JB 1E 104K-T | B | 88.5/74 |
| C615 | 4030011600 | S.CER C1608 JB 1E 104K-T | B | 86.9/86 |
| C616 | 4030011600 | S.CER C1608 JB 1E 104K-T | B | 87.1/75.9 |
| C617 | 4030011600 | S.CER C1608 JB 1E 104K-T | T | 87.9/67 |
| C618 | 4030011600 | S.CER C1608 JB 1E 104K-T | B | 83.9/86 |
| C619 | 4030011600 | S.CER C1608 JB 1E 104K-T | B | 83.5/75.7 |
| C620 | 4030011600 | S.CER C1608 JB 1E 104K-T | B | 81.1/86 |
| C621 | 4030011600 | S.CER C1608 JB 1E 104K-T | B | 81.9/83.6 |
| C622 | 4030011600 | S.CER C1608 JB 1E 104K-T | B | 81.9/81.9 |
| C623 | 4030011600 | S.CER C1608 JB 1E 104K-T | B | 81/77.2 |
| C624 | 4030011600 | S.CER C1608 JB 1E 104K-T | B | 81/74.5 |
| C625 | 4030011600 | S.CER C1608 JB 1E 104K-T | B | 74.5/91.6 |
| C626 | 4030011600 | S.CER C1608 JB 1E 104K-T | B | 74.5/77.2 |
| C627 | 4030011600 | S.CER C1608 JB 1E 104K-T | B | 78.3/67.4 |
| C628 | 4030011600 | S.CER C1608 JB 1E 104K-T | B | 75.5/93.8 |
| C629 | 4030011600 | S.CER C1608 JB 1E 104K-T | B | 73.8/69.4 |
| C630 | 4030011600 | S.CER C1608 JB 1E 104K-T | T | 74/76.5 |
| C631 | 4030011600 | S.CER C1608 JB 1E 104K-T | T | 74/80.8 |
| C632 | 4030011600 | S.CER C1608 JB 1E 104K-T | T | 73.9/73.2 |
| C633 | 4030011600 | S.CER C1608 JB 1E 104K-T | T | 102.8/90.4 |
| C634 | 4030011600 | S.CER C1608 JB 1E 104K-T | T | 102.9/76.2 |
| C635 | 4030011600 | S.CER C1608 JB 1E 104K-T | B | 101.2/83.5 |
| C636 | 4030011600 | S.CER C1608 JB 1E 104K-T | B | 101.2/80.3 |
| C637 | 4030011600 | S.CER C1608 JB 1E 104K-T | B | 101.4/72 |
| C638 | 4030011600 | S.CER C1608 JB 1E 104K-T | B | 96/93.9 |
| C639 | 4030011600 | S.CER C1608 JB 1E 104K-T | T | 104/87.3 |
| C640 | 4030011600 | S.CER C1608 JB 1E 104K-T | B | 93/82.8 |
| C641 | 4030011600 | S.CER C1608 JB 1E 104K-T | B | 93.8/87.5 |
| C642 | 4030011600 | S.CER C1608 JB 1E 104K-T | B | 93.8/81.4 |
| C643 | 4030011600 | S.CER C1608 JB 1E 104K-T | B | 93/77.2 |
| C644 | 4030011600 | S.CER C1608 JB 1E 104K-T | B | 93/74.5 |
| C645 | 4030011600 | S.CER C1608 JB 1E 104K-T | B | 94.8/67.4 |
| C646 | 4030011600 | S.CER C1608 JB 1E 104K-T | B | 92.8/93.9 |
| C647 | 4030011600 | S.CER C1608 JB 1E 104K-T | T | 94.3/67 |
| C648 | 4030011600 | S.CER C1608 JB 1E 104K-T | B | 89.7/86 |
| C649 | 4030011600 | S.CER C1608 JB 1E 104K-T | B | 85.4/67.5 |
| C650 | 4030011600 | S.CER C1608 JB 1E 104K-T | B | 85.5/86.7 |
| C651 | 4030011600 | S.CER C1608 JB 1E 104K-T | B | 85.4/74 |

M.=Mounted side (T: Mounted on the Top side, B: Mounted on the Bottom side)
S.=Surface mount

## [SCOPE UNIT]

| REF NO. | ORDER NO. | DESCRIPTION | M. | H/V LOCATION |
|---|---|---|---|---|
| C652 | 4030011600 | S.CER C1608 JB 1E 104K-T | B | 79.4/93.8 |
| C653 | 4030011600 | S.CER C1608 JB 1E 104K-T | B | 82.5/86.8 |
| C654 | 4030011600 | S.CER C1608 JB 1E 104K-T | T | 78.7/66.9 |
| C655 | 4030011600 | S.CER C1608 JB 1E 104K-T | B | 81.9/79.9 |
| C656 | 4030011600 | S.CER C1608 JB 1E 104K-T | B | 74.5/84.6 |
| C657 | 4030011600 | S.CER C1608 JB 1E 104K-T | B | 74.5/80.3 |
| C658 | 4030011600 | S.CER C1608 JB 1E 104K-T | B | 74.6/71.4 |
| C659 | 4030011600 | S.CER C1608 JB 1E 104K-T | B | 74.5/88.1 |
| C660 | 4510008540 | S.ELE EEE1CA100SR | T | 67.6/75 |
| C661 | 4030011600 | S.CER C1608 JB 1E 104K-T | B | 72.8/74.7 |
| C662 | 4030011600 | S.CER C1608 JB 1E 104K-T | T | 88.3/95.9 |
| C663 | 4030011600 | S.CER C1608 JB 1E 104K-T | T | 68.8/70.3 |
| C664 | 4030011600 | S.CER C1608 JB 1E 104K-T | T | 66.2/67.6 |
| C665 | 4030011600 | S.CER C1608 JB 1E 104K-T | B | 67.5/76.8 |
| C666 | 4550007310 | S.TAN F930J227MNMBMA | B | 108.6/73.9 |
| C667 | 4550007310 | S.TAN F930J227MNMBMA | B | 108.6/68.6 |
| C671 | 4030011600 | S.CER C1608 JB 1E 104K-T | T | 114.2/70.1 |
| C672 | 4030006880 | S.CER C1608 JB 1H 472K-T | T | 72.9/64.4 |
| C701 | 4030011600 | S.CER C1608 JB 1E 104K-T | T | 76/57 |
| C702 | 4030011600 | S.CER C1608 JB 1E 104K-T | T | 72.7/53.6 |
| C703 | 4030011600 | S.CER C1608 JB 1E 104K-T | T | 74.6/57 |
| C720 | 4030006880 | S.CER C1608 JB 1H 472K-T | T | 82.9/38.1 |
| C721 | 4030011600 | S.CER C1608 JB 1E 104K-T | T | 83.2/40.2 |
| C722 | 4510008540 | S.ELE EEE1CA100SR | T | 82.6/44.1 |
| C723 | 4030006880 | S.CER C1608 JB 1H 472K-T | T | 109.9/37.4 |
| C724 | 4030011600 | S.CER C1608 JB 1E 104K-T | T | 109.9/38.9 |
| C725 | 4510008540 | S.ELE EEE1CA100SR | T | 110.1/33.2 |
| C726 | 4030006880 | S.CER C1608 JB 1H 472K-T | T | 108.6/45.9 |
| C727 | 4030006880 | S.CER C1608 JB 1H 472K-T | T | 105.6/45.3 |
| C730 | 4030011600 | S.CER C1608 JB 1E 104K-T | T | 84.2/35.3 |
| C731 | 4030011600 | S.CER C1608 JB 1E 104K-T | T | 84.2/38.1 |
| C733 | 4030011600 | S.CER C1608 JB 1E 104K-T | T | 93.4/26.3 |
| C734 | 4030011600 | S.CER C1608 JB 1E 104K-T | T | 103.1/29.9 |
| C736 | 4030011600 | S.CER C1608 JB 1E 104K-T | T | 96.8/44.8 |
| C737 | 4030011600 | S.CER C1608 JB 1E 104K-T | T | 103/40.9 |
| C738 | 4030011600 | S.CER C1608 JB 1E 104K-T | T | 96.5/26.3 |
| C739 | 4030011600 | S.CER C1608 JB 1E 104K-T | T | 99.6/26.3 |
| C740 | 4030011600 | S.CER C1608 JB 1E 104K-T | T | 103.1/37.4 |
| C741 | 4030011600 | S.CER C1608 JB 1E 104K-T | T | 92.6/45.1 |
| C742 | 4030011600 | S.CER C1608 JB 1E 104K-T | T | 90/45.1 |
| C750 | 4030006900 | S.CER C1608 JB 1H 103K-T | T | 103.2/34.5 |
| C751 | 4030006900 | S.CER C1608 JB 1H 103K-T | T | 105.1/37.3 |
| C760 | 4030006880 | S.CER C1608 JB 1H 472K-T | T | 110.9/20.8 |
| C761 | 4030007150 | S.CER C1608 CH 1H 151J-T | T | 110.1/22.8 |
| C762 | 4030007110 | S.CER C1608 CH 1H 680J-T | T | 108.4/21.6 |
| C763 | 4030011280 | S.CER C1608 CH 1H 271J-T | T | 106/25.1 |
| C764 | 4030007080 | S.CER C1608 CH 1H 390J-T | T | 103.4/20.8 |
| C765 | 4030011830 | S.CER C1608 CH 1H 301J-T | T | 100/24.3 |
| C766 | 4030007020 | S.CER C1608 CH 1H 120J-T | T | 100/21.7 |
| C767 | 4030007170 | S.CER C1608 CH 1H 221J-T | T | 95.7/24.3 |
| C768 | 4030011280 | S.CER C1608 CH 1H 271J-T | T | 93.5/20.4 |
| C769 | 4030006860 | S.CER C1608 JB 1H 102K-T | T | 91.4/21.3 |
| C770 | 4030011280 | S.CER C1608 CH 1H 271J-T | T | 89.3/20.5 |
| C801 | 4030006880 | S.CER C1608 JB 1H 472K-T | T | 66.2/40 |
| C802 | 4510008540 | S.ELE EEE1CA100SR | T | 69/44.8 |
| C803 | 4030006900 | S.CER C1608 JB 1H 103K-T | T | 60.4/37.1 |
| C805 | 4550007660 | S.TAN F931E105MAABMA | T | 58.5/38.7 |
| C806 | 4340000240 | S.MLR ECHU 1C 682JX5 | T | 64.2/43.3 |
| C807 | 4030006880 | S.CER C1608 JB 1H 472K-T | T | 69.6/33.3 |
| C808 | 4030006880 | S.CER C1608 JB 1H 472K-T | B | 62.7/32 |
| C809 | 4510008540 | S.ELE EEE1CA100SR | T | 64.9/25.7 |
| C810 | 4030006880 | S.CER C1608 JB 1H 472K-T | T | 73.8/42.8 |
| C811 | 4030006880 | S.CER C1608 JB 1H 472K-T | T | 73.3/32.9 |
| C812 | 4030006880 | S.CER C1608 JB 1H 472K-T | T | 73.8/30.9 |
| C813 | 4030011600 | S.CER C1608 JB 1E 104K-T | T | 65.9/31.8 |
| C821 | 4030007060 | S.CER C1608 CH 1H 270J-T | T | 57.8/46.5 |
| C822 | 4030007100 | S.CER C1608 CH 1H 560J-T | T | 54.4/45.7 |
| C823 | 4030006960 | S.CER C1608 CH 1H 050C-T | T | 55.7/45.7 |
| C824 | 4610001850 | S.TRI TZB4R200AB10R00 | T | 50.6/44.7 |
| C825 | 4030007130 | S.CER C1608 CH 1H 101J-T | T | 46.9/46.8 |
| C826 | 4030007060 | S.CER C1608 CH 1H 270J-T | T | 40.9/45.9 |
| C827 | 4030007020 | S.CER C1608 CH 1H 120J-T | T | 45.5/44.6 |
| C828 | 4030006880 | S.CER C1608 JB 1H 472K-T | T | 43.5/43.1 |
| C829 | 4030009500 | S.CER C1608 CH 1H 0R5B-T | T | 37.9/42.9 |
| C830 | 4030006860 | S.CER C1608 JB 1H 102K-T | T | 47.9/52.8 |
| C831 | 4030006880 | S.CER C1608 JB 1H 472K-T | T | 46.4/52.8 |
| C832 | 4510008500 | S.ELE EEE1CA101WP | T | 49.3/57.6 |
| C833 | 4510008540 | S.ELE EEE1CA100SR | T | 40.3/58 |
| C842 | 4030006880 | S.CER C1608 JB 1H 472K-T | T | 39.4/35 |
| C843 | 4030006860 | S.CER C1608 JB 1H 102K-T | T | 23.8/34.3 |
| C844 | 4030006880 | S.CER C1608 JB 1H 472K-T | T | 24.5/32.4 |
| C845 | 4510008520 | S.ELE EEE1CA470SP | T | 17.7/35.3 |
| C846 | 4030006880 | S.CER C1608 JB 1H 472K-T | T | 38.4/31.3 |
| C847 | 4030006880 | S.CER C1608 JB 1H 472K-T | T | 30.3/36.1 |
| C848 | 4030006880 | S.CER C1608 JB 1H 472K-T | T | 30.3/38.3 |
| C849 | 4030006880 | S.CER C1608 JB 1H 472K-T | T | 27/40 |
| C850 | 4030006880 | S.CER C1608 JB 1H 472K-T | T | 30.3/39.7 |
| C851 | 4030006880 | S.CER C1608 JB 1H 472K-T | T | 25.1/42.3 |
| C852 | 4030007120 | S.CER C1608 CH 1H 820J-T | T | 30/44.2 |
| C853 | 4030007070 | S.CER C1608 CH 1H 330J-T | T | 24.4/46.8 |
| C854 | 4030007140 | S.CER C1608 CH 1H 121J-T | T | 30/45.8 |
| C855 | 4030007020 | S.CER C1608 CH 1H 120J-T | T | 30.1/48.1 |
| C856 | 4030007090 | S.CER C1608 CH 1H 470J-T | T | 30.2/50.4 |
| C862 | 4030006880 | S.CER C1608 JB 1H 472K-T | T | 60.4/34.5 |
| C911 | 4030008680 | S.CER C2012 JF 1C 105Z-T | T | 92.4/112.7 |
| C912 | 4030008680 | S.CER C2012 JF 1C 105Z-T | T | 92.4/109 |
| C913 | 4030008680 | S.CER C2012 JF 1C 105Z-T | T | 92.4/105.5 |
| C914 | 4030008680 | S.CER C2012 JF 1C 105Z-T | T | 96.8/115.2 |
| C915 | 4030008680 | S.CER C2012 JF 1C 105Z-T | T | 101.5/114.1 |
| C916 | 4030011600 | S.CER C1608 JB 1E 104K-T | T | 108.7/116.4 |
| C917 | 4030011600 | S.CER C1608 JB 1E 104K-T | B | 108.2/115.9 |
| C918 | 4030011600 | S.CER C1608 JB 1E 104K-T | B | 91.3/112.6 |

## [SCOPE UNIT]

| REF NO. | ORDER NO. | DESCRIPTION | M. | H/V LOCATION |
|---|---|---|---|---|
| J1 | 6510007020 | CNR TMP-J01X-V6 | | |
| J2 | 6510007020 | CNR TMP-J01X-V6 | | |
| J3 | 6510007020 | CNR TMP-J01X-V6 | | |
| J4 | 6510020001 | S.CNR 52808-3071 (3090) | T | 127.9/41.5 |
| J11 | 6510007020 | CNR TMP-J01X-V6 | | |
| J901 | 6510023720 | CNR LGY6501-0600C | | |
| J902 | 6510023120 | CNR CD6109SA1J0 <CVI> | | |
| J903 | 6510024040 | CNR TM11R-5M2-88-LP | | |
| J904 | 6510024032 | CNR UBA-4R-D10T-4D (LF) (SN) | | |
| J905 | 6450001941 | CNR KEY-15S-2A3A (LF) (SN) | | |
| J906 | 6510019971 | S.CNR 52808-1071 | T | 129/97.7 |
| J907 | 6510020251 | S.CNR B9B-PH-SM4-TB (LF) (SN) | T | 50.7/105.2 |
| J908 | 6510022311 | S.CNR B5B-PH-SM4-TB (LF) (SN) | T | 88.7/110.1 |
| J909 | 6510003471 | CNR B11B-EH-S (LF) (SN) | | |
| J910 | 6510019421 | S.CNR B8B-ZR-SM4-TF (LF) (SN) | T | 109.6/104.7 |
| DS901 | 5040002930 | S.LED SML-512MW T86 | T | 57.1/115.2 |
| DS902 | 5040002930 | S.LED SML-512MW T86 | T | 46/115.1 |
| EP901 | 6910012350 | S.BEA MMZ1608Y 102BT | B | 131.1/119.6 |
| EP902 | 6910012350 | S.BEA MMZ1608Y 102BT | B | 122.5/122.7 |
| EP903 | 6910012350 | S.BEA MMZ1608Y 102BT | T | 81.3/114.1 |
| EP904 | 6910012350 | S.BEA MMZ1608Y 102BT | T | 82.6/114.1 |
| EP905 | 6910012350 | S.BEA MMZ1608Y 102BT | B | 79.7/113.7 |
| EP906 | 6910012350 | S.BEA MMZ1608Y 102BT | T | 81.9/110.1 |
| EP907 | 6910012350 | S.BEA MMZ1608Y 102BT | B | 83.8/111.5 |
| EP908 | 6910012350 | S.BEA MMZ1608Y 102BT | B | 85.1/111.5 |

M.=Mounted side (T: Mounted on the Top side, B: Mounted on the Bottom side)
S.=Surface mount

## [LOGIC UNIT]

| REF NO. | ORDER NO. | DESCRIPTION | | M. | H/V LOCATION |
|---|---|---|---|---|---|
| IC1 | 1130014630 | S.IC | MT48LC16M16A2P IT | B | 59.3/91.9 |
| IC2 | 1130014630 | S.IC | MT48LC16M16A2P IT | T | 59.3/99 |
| IC51 | 1130011591 | S.IC | IDT70V24L15PFG | B | 95.5/56 |
| IC52 | 1140009781 | S.IC | XC9572XL-10TQG100C | B | 116.5/56 |
| IC53 | 1110005821 | S.IC | R3112N281A-TR-F | T | 142.2/100.9 |
| IC54 | 1130007431 | S.IC | TC7S14FU (TE85R,F) | T | 146.5/100.6 |
| IC55 | 1130008041 | S.IC | TC7SH04FU (TE85L,JF) | T | 97.9/34.4 |
| IC56 | 1130010111 | S.IC | TC7WH04FU (TE12L,F) | B | 35/25.1 |
| IC101 | 1130011010 | S.IC | SN74CBTLV3257PWR <ACE> | T | 25.2/75.3 |
| IC102 | 1130006441 | S.IC | TC7S08F (TE85R,F) | T | 62/39 |
| IC103 | 1140011561 | S.IC | HD6417751RBP200V | T | 53.5/64.9 |
| IC104 | 1130008361 | S.IC | TC7SHU04FU (TE85L,JF) | T | 8.1/60.8 |
| IC105 | 1130012241 | S.IC | CY2292FXC (SX-2590J) | T | 12.6/69 |
| IC106 | 1130011110 | S.IC | TC74VCX04FT (EL) | T | 10/77.1 |
| IC201 | 1130014630 | S.IC | MT48LC16M16A2P IT | B | 128/77.3 |
| IC202 | 1130014630 | S.IC | MT48LC16M16A2P IT | B | 128.1/95.5 |
| IC203 | 1140011571 | S.IC | HD64404BTDV | T | 97.4/78.4 |
| IC204 | 1140011581 | S.IC | ADV7123KSTZ50 | T | 207.1/29.6 |
| IC205 | 1130011941 | S.IC | TC7SZ04F (TE85L,F) | T | 195.9/26.4 |
| IC206 | 1130012150 | S.IC | SN74ACT04PWR | T | 196/19.9 |
| IC207 | 1130005721 | S.IC | TC7W04F (TE12L,F) | B | 212.2/38.2 |
| IC208 | 1130014080 | S.IC | BD6517F-E2 | B | 219.1/39.2 |
| IC209 | 1190001920 | S.IC | AK5355-VT-E2 | B | 109.8/22.9 |
| IC210 | 1190001920 | S.IC | AK5355-VT-E2 | B | 120.7/22.9 |
| IC211 | 1190001910 | S.IC | AK4384-VT-E2 | B | 131.3/32.6 |
| IC212 | 1190001910 | S.IC | AK4384-VT-E2 | B | 119.1/33.4 |
| IC401 | 1130010970 | S.IC | PCI1410APGE | B | 23.5/48.5 |
| IC402 | 1130011960 | S.IC | TPS2211AIDBR | B | 21.8/31.2 |
| IC403 | 1130009570 | S.IC | BR93LC46F-WE2 | T | 24.2/67.3 |
| IC404 | 1130010990 | S.IC | RTL8139C | B | 23/76.5 |
| IC601 | 1130008041 | S.IC | TC7SH04FU (TE85L,JF) | B | 169.3/55.8 |
| IC602 | 1130008711 | S.IC | TC7SET04FU (T5L,JF) | B | 169.3/53.3 |
| IC603 | 1110004770 | S.IC | BU9480F-E2 | T | 176/57 |
| IC604 | 1140011590 | S.IC | HD64F2377VFQ33V | B | 87/30.5 |
| IC605 | 1140009781 | S.IC | XC9572XL-10TQG100C | B | 141/57 |
| IC607 | 1130006441 | S.IC | TC7S08F (TE85R,F) | B | 59.6/22.6 |
| IC608 | 1130006441 | S.IC | TC7S08F (TE85R,F) | B | 63.3/22.6 |
| IC609 | 1130005252 | S.IC | TC74HC08AF (EL,F) | B | 60/29.8 |
| IC610 | 1140008650 | S.IC | HN58X2464TI | B | 54/37.4 |
| IC801 | 1180002020 | S.REG | BA033FP-E2 | B | 144.2/112.5 |
| IC802 | 1180001541 | S.IC | TA78L08F (TE12L,F) | T | 131.1/111.6 |
| IC821 | 1110002700 | S.IC | NJM2904M-TE1-#FMZB | B | 16.9/105 |
| IC851 | 1110003870 | S.IC | NJM2058M-TE1 | B | 186.3/56.1 |
| IC852 | 1110003870 | S.IC | NJM2058M-TE1 | B | 135.5/12.6 |
| IC853 | 1110003870 | S.IC | NJM2058M-TE1 | B | 114.5/10.1 |
| IC854 | 1130005721 | S.IC | TC7W04F (TE12L,F) | B | 161.4/40.6 |
| | | | | | |
| Q601 | 1530002060 | S.TR | 2SC4081 T106 R | B | 173.3/53.3 |
| Q602 | 1510000510 | S.TR | 2SA1576A T106R | B | 173.2/57.2 |
| Q802 | 1530002060 | S.TR | 2SC4081 T106 R | T | 159.1/70.3 |
| Q803 | 1540000441 | S.TR | 2SD1619T-TD-E | B | 160.1/70.9 |
| Q804 | 1540000441 | S.TR | 2SD1619T-TD-E | B | 166.7/70.8 |
| Q805 | 1530002060 | S.TR | 2SC4081 T106 R | T | 165.7/70.3 |
| Q806 | 1540000441 | S.TR | 2SD1619T-TD-E | B | 173.3/70.8 |
| Q807 | 1530002060 | S.TR | 2SC4081 T106 R | T | 172.3/70.3 |
| Q808 | 1590001330 | S.TR | DTA114EUA T106 | B | 157.7/30.1 |
| Q809 | 1590001330 | S.TR | DTA114EUA T106 | B | 157.7/27.5 |
| Q810 | 1540000550 | S.TR | 2SD1664 T100Q | T | 160.2/78 |
| Q821 | 1520000651 | S.TR | 2SB1201S-TL-E | B | 28.9/108.4 |
| Q822 | 1530002060 | S.TR | 2SC4081 T106 R | B | 25.5/103.6 |
| Q901 | 1590001960 | S.TR | XP4311 (TX) | B | 187.9/88.3 |
| Q902 | 1590001960 | S.TR | XP4311 (TX) | B | 188.9/79.7 |
| Q903 | 1590001960 | S.TR | XP4311 (TX) | B | 193.9/88.3 |
| Q904 | 1590001960 | S.TR | XP4311 (TX) | B | 192.9/79.7 |
| | | | | | |
| D51 | 1750000550 | S.DIO | 1SS355 TE-17 | T | 126.1/48.7 |
| D52 | 1750000550 | S.DIO | 1SS355 TE-17 | T | 126.1/50.5 |
| D53 | 1750000550 | S.DIO | 1SS355 TE-17 | T | 126.1/52.3 |
| D54 | 1750000550 | S.DIO | 1SS355 TE-17 | T | 126.1/54.1 |
| D55 | 1750000550 | S.DIO | 1SS355 TE-17 | T | 124.7/55.9 |
| D56 | 1750000550 | S.DIO | 1SS355 TE-17 | T | 124.7/57.7 |
| D57 | 1750000550 | S.DIO | 1SS355 TE-17 | T | 124.7/59.5 |
| D58 | 1750000550 | S.DIO | 1SS355 TE-17 | T | 124.7/61.3 |
| D59 | 1750000550 | S.DIO | 1SS355 TE-17 | T | 124.7/63.1 |
| D60 | 1750000550 | S.DIO | 1SS355 TE-17 | T | 130.1/48.7 |
| D61 | 1750000550 | S.DIO | 1SS355 TE-17 | T | 130.1/50.5 |
| D62 | 1750000550 | S.DIO | 1SS355 TE-17 | T | 130.1/52.3 |
| D65 | 1750000550 | S.DIO | 1SS355 TE-17 | T | 128.9/57.7 |
| D66 | 1750000550 | S.DIO | 1SS355 TE-17 | T | 128.9/59.5 |
| D67 | 1750000550 | S.DIO | 1SS355 TE-17 | T | 128.9/61.3 |
| D68 | 1750000550 | S.DIO | 1SS355 TE-17 | T | 128.9/63.1 |
| D201 | 1790000980 | S.DIO | MA3J7420GL (TX) | B | 214.6/32.4 |
| D202 | 1790000980 | S.DIO | MA3J7420GL (TX) | B | 214.6/29.4 |
| D203 | 1790000980 | S.DIO | MA3J7420GL (TX) | B | 214.6/26.4 |
| D204 | 1790000980 | S.DIO | MA3J7420GL (TX) | T | 201.5/16.9 |
| D205 | 1790000980 | S.DIO | MA3J7420GL (TX) | T | 201.5/19.8 |
| D206 | 1790000980 | S.DIO | MA3J7420GL (TX) | B | 218/7.4 |
| D207 | 1790000980 | S.DIO | MA3J7420GL (TX) | B | 220.9/7.4 |
| D208 | 1790000980 | S.DIO | MA3J7420GL (TX) | B | 228/7.4 |
| D209 | 1790000980 | S.DIO | MA3J7420GL (TX) | B | 230.8/7.4 |
| D601 | 1750000550 | S.DIO | 1SS355 TE-17 | B | 175.5/52.5 |
| D801 | 1750000370 | S.DIO | DA221 TL | B | 159.1/66.5 |
| D802 | 1750000370 | S.DIO | DA221 TL | B | 165.7/66.5 |
| D803 | 1750000370 | S.DIO | DA221 TL | B | 172.3/66.5 |
| D804 | 1750000271 | S.DIO | 1SS301 (TE85L,F) | B | 170/64.1 |
| D805 | 1790001611 | S.DIO | 1SS385 (TE85L,F) | B | 157.3/38.2 |
| D806 | 1790001611 | S.DIO | 1SS385 (TE85L,F) | B | 157.3/40.3 |
| D821 | 1730002340 | S.ZEN | MA8047-M (TX) | B | 22.4/104.6 |
| D851 | 1750000550 | S.DIO | 1SS355 TE-17 | B | 180.9/50.2 |
| D852 | 1750000550 | S.DIO | 1SS355 TE-17 | B | 191.8/50 |
| D853 | 1790000980 | S.DIO | MA3J7420GL (TX) | B | 122/18.5 |
| D854 | 1790000980 | S.DIO | MA3J7420GL (TX) | B | 119.5/18.5 |

## [LOGIC UNIT]

| REF NO. | ORDER NO. | DESCRIPTION | | M. | H/V LOCATION |
|---|---|---|---|---|---|
| D855 | 1790000980 | S.DIO | MA3J7420GL (TX) | B | 107/18.4 |
| D856 | 1790000980 | S.DIO | MA3J7420GL (TX) | B | 104.5/18.4 |
| D857 | 1750000550 | S.DIO | 1SS355 TE-17 | B | 189.9/61.9 |
| D858 | 1750000550 | S.DIO | 1SS355 TE-17 | B | 182.2/61.9 |
| D860 | 1790000980 | S.DIO | MA3J7420GL (TX) | T | 97.5/26.3 |
| D861 | 1790000980 | S.DIO | MA3J7420GL (TX) | T | 97.5/31.3 |
| D862 | 1790000980 | S.DIO | MA3J7420GL (TX) | T | 97.9/23.7 |
| D863 | 1790000980 | S.DIO | MA3J7420GL (TX) | T | 97.5/28.8 |
| D864 | 1790000980 | S.DIO | MA3J7420GL (TX) | T | 100.4/23.7 |
| D865 | 1790000980 | S.DIO | MA3J7420GL (TX) | T | 94.3/24.7 |
| D866 | 1790000980 | S.DIO | MA3J7420GL (TX) | T | 94.3/27.2 |
| D867 | 1790000980 | S.DIO | MA3J7420GL (TX) | T | 102.9/23.7 |
| D901 | 1790000980 | S.DIO | MA3J7420GL (TX) | T | 188/31.2 |
| | | | | | |
| X101 | 6050011610 | S.XTL | CR-751 (25.000 MHz) | T | 2.9/63.1 |
| X201 | 6050010680 | S.XTL | CR-628 (24.576 MHz) | T | 103.9/94.6 |
| X202 | 6050011910 | S.XTL | CR-780 (48 MHz) | T | 100.2/60.6 |
| X601 | 6050011810 | S.XTL | CR-755 (15.9744 MHz) | T | 81.9/13.6 |
| | | | | | |
| L203 | 6200002631 | S.COL | NLV25T-R10J | B | 222.2/32.6 |
| L204 | 6200002631 | S.COL | NLV25T-R10J | B | 222.2/29.6 |
| L205 | 6200002631 | S.COL | NLV25T-R10J | B | 222.2/26.6 |
| L801 | 6200003261 | S.COL | NLV32T-101J | B | 66.9/123.5 |
| L803 | 6180003321 | S.COL | SLF6028T-150M1R0-PF | B | 88.7/112.9 |
| L804 | 6180003321 | S.COL | SLF6028T-150M1R0-PF | B | 102.5/112.9 |
| L805 | 6180003321 | S.COL | SLF6028T-150M1R0-PF | B | 95.8/112.9 |
| L806 | 6180003321 | S.COL | SLF6028T-150M1R0-PF | B | 109/112.9 |
| L807 | 6180003321 | S.COL | SLF6028T-150M1R0-PF | B | 115.7/112.9 |
| L808 | 6200003590 | S.COL | EXCCL3225U1 | T | 92.1/115.8 |
| L809 | 6200003590 | S.COL | EXCCL3225U1 | B | 93.1/123.1 |
| L810 | 6200003590 | S.COL | EXCCL3225U1 | B | 87.7/123.2 |
| L811 | 6200001831 | S.COL | NLV32T-100J | B | 127.9/22.6 |
| L821 | 6200003590 | S.COL | EXCCL3225U1 | B | 121.2/112.7 |
| L822 | 6200003590 | S.COL | EXCCL3225U1 | T | 125/115.8 |
| L823 | 6200009790 | S.COL | BLM31PG121SN1 | T | 18.2/25.6 |
| L824 | 6200003590 | S.COL | EXCCL3225U1 | B | 130.1/115.5 |
| L825 | 6200003590 | S.COL | EXCCL3225U1 | B | 133.6/116.1 |
| L826 | 6180003321 | S.COL | SLF6028T-150M1R0-PF | B | 179.9/15.5 |
| L827 | 6200003590 | S.COL | EXCCL3225U1 | T | 120.4/115.8 |
| L832 | 6200003590 | S.COL | EXCCL3225U1 | B | 80.1/122.1 |
| L833 | 6200003590 | S.COL | EXCCL3225U1 | B | 75.6/122.1 |
| L834 | 6200003590 | S.COL | EXCCL3225U1 | B | 125.6/112.2 |
| L835 | 6200003590 | S.COL | EXCCL3225U1 | B | 125.6/115.3 |
| L901 | 6200003590 | S.COL | EXCCL3225U1 | B | 214.4/74.4 |
| L902 | 6200003590 | S.COL | EXCCL3225U1 | B | 214.4/78.2 |
| L903 | 6200003590 | S.COL | EXCCL3225U1 | B | 206.5/80 |
| L904 | 6200003590 | S.COL | EXCCL3225U1 | B | 214.4/81.2 |
| L905 | 6200003590 | S.COL | EXCCL3225U1 | B | 21/114.8 |
| L906 | 6200003590 | S.COL | EXCCL3225U1 | B | 24/114.8 |
| L907 | 6200003590 | S.COL | EXCCL3225U1 | B | 27/114.8 |
| L908 | 6200003590 | S.COL | EXCCL3225U1 | B | 30/114.8 |
| L909 | 6200003261 | S.COL | NLV32T-101J | B | 181.3/82.6 |
| L910 | 6200003590 | S.COL | EXCCL3225U1 | B | 195.7/82.4 |
| L911 | 6200003590 | S.COL | EXCCL3225U1 | B | 221.8/76.5 |
| L912 | 6200003590 | S.COL | EXCCL3225U1 | B | 230.4/76.8 |
| L913 | 6200003590 | S.COL | EXCCL3225U1 | B | 230.4/63 |
| L914 | 6200003590 | S.COL | EXCCL3225U1 | B | 221.8/64 |
| L915 | 6200003590 | S.COL | EXCCL3225U1 | B | 230.4/66 |
| L916 | 6200003590 | S.COL | EXCCL3225U1 | B | 221.8/67 |
| L917 | 6200003590 | S.COL | EXCCL3225U1 | T | 162.2/21.7 |
| L918 | 6200003590 | S.COL | EXCCL3225U1 | T | 186.4/18.7 |
| L919 | 6200003590 | S.COL | EXCCL3225U1 | T | 186.4/22.4 |
| L920 | 6200003590 | S.COL | EXCCL3225U1 | T | 162.3/24.7 |
| L1101 | 6200003590 | S.COL | EXCCL3225U1 | T | 40.5/25.8 |
| | | | | | |
| R1 | 7030003520 | S.RES | ERJ3GEYJ 472 V (4.7 k) | T | 91.5/101.3 |
| R51 | 7030003520 | S.RES | ERJ3GEYJ 472 V (4.7 k) | T | 143/76.8 |
| R52 | 7030003560 | S.RES | ERJ3GEYJ 103 V (10 k) | T | 138.6/100.6 |
| R55 | 7030003440 | S.RES | ERJ3GEYJ 102 V (1 k) | B | 126.4/51.5 |
| R56 | 7030003440 | S.RES | ERJ3GEYJ 102 V (1 k) | B | 123.5/46.1 |
| R57 | 7030003680 | S.RES | ERJ3GEYJ 104 V (100 k) | B | 31.3/25 |
| R58 | 7030003680 | S.RES | ERJ3GEYJ 104 V (100 k) | B | 30/25 |
| R101 | 7030003680 | S.RES | ERJ3GEYJ 104 V (100 k) | T | 19.3/74.8 |
| R102 | 7030003520 | S.RES | ERJ3GEYJ 472 V (4.7 k) | T | 31/73.7 |
| R103 | 7030003520 | S.RES | ERJ3GEYJ 472 V (4.7 k) | T | 31/75.7 |
| R104 | 7030003520 | S.RES | ERJ3GEYJ 472 V (4.7 k) | T | 19.3/73.5 |
| R105 | 7030003520 | S.RES | ERJ3GEYJ 472 V (4.7 k) | T | 19.3/76.1 |
| R106 | 7030003560 | S.RES | ERJ3GEYJ 103 V (10 k) | B | 54.6/60.1 |
| R107 | 7030003560 | S.RES | ERJ3GEYJ 103 V (10 k) | B | 49.4/60.1 |
| R108 | 7030003560 | S.RES | ERJ3GEYJ 103 V (10 k) | B | 48.4/49.5 |
| R109 | 7030003560 | S.RES | ERJ3GEYJ 103 V (10 k) | B | 52/60.1 |
| R110 | 7030003560 | S.RES | ERJ3GEYJ 103 V (10 k) | T | 54.9/49.3 |
| R111 | 7030003560 | S.RES | ERJ3GEYJ 103 V (10 k) | B | 54.6/58.8 |
| R112 | 7030003560 | S.RES | ERJ3GEYJ 103 V (10 k) | T | 53.6/49.3 |
| R113 | 7030003560 | S.RES | ERJ3GEYJ 103 V (10 k) | B | 49.4/58.8 |
| R114 | 7030003560 | S.RES | ERJ3GEYJ 103 V (10 k) | B | 45.8/49.5 |
| R115 | 7030003560 | S.RES | ERJ3GEYJ 103 V (10 k) | B | 49.4/62.7 |
| R116 | 7030003560 | S.RES | ERJ3GEYJ 103 V (10 k) | B | 49.4/61.4 |
| R117 | 7030003260 | S.RES | ERJ3GEYJ 330 V (33) | B | 43.2/49.5 |
| R118 | 7030003560 | S.RES | ERJ3GEYJ 103 V (10 k) | B | 49.4/64 |
| R119 | 7030003560 | S.RES | ERJ3GEYJ 103 V (10 k) | B | 41.4/50 |
| R120 | 7030003560 | S.RES | ERJ3GEYJ 103 V (10 k) | B | 49.4/65.3 |
| R121 | 7030003560 | S.RES | ERJ3GEYJ 103 V (10 k) | B | 43.2/46.9 |
| R122 | 7030003560 | S.RES | ERJ3GEYJ 103 V (10 k) | B | 39.3/56 |
| R123 | 7030003560 | S.RES | ERJ3GEYJ 103 V (10 k) | B | 43.2/45.6 |
| R124 | 7030003680 | S.RES | ERJ3GEYJ 104 V (100 k) | T | 51/49.3 |
| R125 | 7030003520 | S.RES | ERJ3GEYJ 472 V (4.7 k) | T | 52.3/49.3 |
| R126 | 7030003560 | S.RES | ERJ3GEYJ 103 V (10 k) | B | 52/61.4 |
| R127 | 7030003560 | S.RES | ERJ3GEYJ 103 V (10 k) | B | 52/58.8 |
| R128 | 7030003560 | S.RES | ERJ3GEYJ 103 V (10 k) | T | 53.6/45.7 |
| R129 | 7030003560 | S.RES | ERJ3GEYJ 103 V (10 k) | T | 54.9/46.7 |

M.=Mounted side (T: Mounted on the Top side, B: Mounted on the Bottom side)
S.=Surface mount

## [LOGIC UNIT]

| REF NO. | ORDER NO. | DESCRIPTION | M. | H/V LOCATION |
|---|---|---|---|---|
| R130 | 7030003560 | S.RES ERJ3GEYJ 103 V (10 k) | B | 56.4/50.5 |
| R131 | 7030003560 | S.RES ERJ3GEYJ 103 V (10 k) | B | 54.6/61.4 |
| R132 | 7030003560 | S.RES ERJ3GEYJ 103 V (10 k) | T | 56.2/49.3 |
| R133 | 7030003560 | S.RES ERJ3GEYJ 103 V (10 k) | T | 56.2/46.7 |
| R134 | 7030003200 | S.RES ERJ3GEYJ 100 V (10) | B | 57.2/58.8 |
| R135 | 7030003200 | S.RES ERJ3GEYJ 100 V (10) | B | 57.2/60.1 |
| R136 | 7030003200 | S.RES ERJ3GEYJ 100 V (10) | B | 70.1/50.5 |
| R137 | 7030004050 | S.RES ERJ3GEYJ 1R0 V (1) | B | 49.4/68 |
| R138 | 7030003560 | S.RES ERJ3GEYJ 103 V (10 k) | B | 49.4/69.3 |
| R139 | 7030003560 | S.RES ERJ3GEYJ 103 V (10 k) | B | 49.7/78 |
| R140 | 7410000990 | S.ARY EXB-V8V 470JV (47) | T | 47/82.7 |
| R141 | 7410000990 | S.ARY EXB-V8V 470JV (47) | T | 43.3/82.7 |
| R142 | 7410000990 | S.ARY EXB-V8V 470JV (47) | T | 54.4/82.7 |
| R143 | 7410000990 | S.ARY EXB-V8V 470JV (47) | T | 61.8/82.7 |
| R144 | 7410000990 | S.ARY EXB-V8V 470JV (47) | T | 50.7/82.7 |
| R145 | 7410000990 | S.ARY EXB-V8V 470JV (47) | T | 58.1/82.7 |
| R146 | 7030003280 | S.RES ERJ3GEYJ 470 V (47) | T | 70/81.8 |
| R147 | 7030003280 | S.RES ERJ3GEYJ 470 V (47) | T | 70/80.5 |
| R148 | 7410000990 | S.ARY EXB-V8V 470JV (47) | T | 65.5/82.7 |
| R149 | 7410000990 | S.ARY EXB-V8V 470JV (47) | T | 70/54.9 |
| R150 | 7410000990 | S.ARY EXB-V8V 470JV (47) | T | 70/58.6 |
| R151 | 7410000990 | S.ARY EXB-V8V 470JV (47) | T | 70/62.3 |
| R152 | 7410000990 | S.ARY EXB-V8V 470JV (47) | T | 70/66 |
| R153 | 7030003200 | S.RES ERJ3GEYJ 100 V (10) | T | 70/83.1 |
| R154 | 7410000990 | S.ARY EXB-V8V 470JV (47) | T | 70/69.7 |
| R155 | 7410000990 | S.ARY EXB-V8V 470JV (47) | T | 70/73.4 |
| R156 | 7410000990 | S.ARY EXB-V8V 470JV (47) | T | 70/78 |
| R157 | 7410000800 | S.ARY EXB-V8V 103JV (10 k) | T | 77.4/38.7 |
| R158 | 7030003560 | S.RES ERJ3GEYJ 103 V (10 k) | T | 77.4/36.2 |
| R159 | 7030003560 | S.RES ERJ3GEYJ 103 V (10 k) | T | 64.3/41.3 |
| R161 | 7030003250 | S.RES ERJ3GEYJ 270 V (27) | T | 9.1/64.6 |
| R162 | 7030003800 | S.RES ERJ3GEYJ 105 V (1 M) | T | 6.2/59.5 |
| R163 | 7030003320 | S.RES ERJ3GEYJ 101 V (100) | T | 12.5/73.7 |
| R164 | 7030003250 | S.RES ERJ3GEYJ 270 V (27) | B | 10.8/68.3 |
| R165 | 7030003860 | S.RES ERJ3GE JPW V | T | 4.3/76.8 |
| R166 | 7030003860 | S.RES ERJ3GE JPW V | T | 8.5/81.2 |
| R167 | 7030003860 | S.RES ERJ3GE JPW V | T | 14.9/78.1 |
| R170 | 7030003600 | S.RES ERJ3GEYJ 223 V (22 k) | B | 38.5/38.6 |
| R171 | 7030003600 | S.RES ERJ3GEYJ 223 V (22 k) | B | 35.3/75.2 |
| R172 | 7030003600 | S.RES ERJ3GEYJ 223 V (22 k) | B | 35.3/76.5 |
| R173 | 7030003600 | S.RES ERJ3GEYJ 223 V (22 k) | B | 39.4/78.2 |
| R174 | 7030003600 | S.RES ERJ3GEYJ 223 V (22 k) | B | 37.4/79 |
| R175 | 7030003600 | S.RES ERJ3GEYJ 223 V (22 k) | B | 37.4/80.3 |
| R176 | 7030003600 | S.RES ERJ3GEYJ 223 V (22 k) | B | 35.3/73.9 |
| R201 | 7030003560 | S.RES ERJ3GEYJ 103 V (10 k) | T | 114.5/85.1 |
| R202 | 7030003560 | S.RES ERJ3GEYJ 103 V (10 k) | T | 111.3/85.1 |
| R203 | 7030003560 | S.RES ERJ3GEYJ 103 V (10 k) | T | 118.4/86.4 |
| R204 | 7030003560 | S.RES ERJ3GEYJ 103 V (10 k) | T | 118.4/85.1 |
| R205 | 7030003560 | S.RES ERJ3GEYJ 103 V (10 k) | T | 114.5/82.5 |
| R206 | 7030003560 | S.RES ERJ3GEYJ 103 V (10 k) | T | 111.3/83.8 |
| R207 | 7030003560 | S.RES ERJ3GEYJ 103 V (10 k) | T | 118.4/83.8 |
| R208 | 7030003560 | S.RES ERJ3GEYJ 103 V (10 k) | T | 118.4/82.5 |
| R209 | 7030003560 | S.RES ERJ3GEYJ 103 V (10 k) | T | 114.5/83.8 |
| R212 | 7030003640 | S.RES ERJ3GEYJ 473 V (47 k) | T | 83.7/82 |
| R213 | 7030003640 | S.RES ERJ3GEYJ 473 V (47 k) | T | 83.7/83.3 |
| R218 | 7030003520 | S.RES ERJ3GEYJ 472 V (4.7 k) | T | 116.9/49 |
| R219 | 7030003520 | S.RES ERJ3GEYJ 472 V (4.7 k) | T | 83.7/79.4 |
| R220 | 7030003520 | S.RES ERJ3GEYJ 472 V (4.7 k) | B | 94.1/74.4 |
| R221 | 7030003560 | S.RES ERJ3GEYJ 103 V (10 k) | T | 83.7/73.7 |
| R225 | 7030003560 | S.RES ERJ3GEYJ 103 V (10 k) | B | 94.1/79.6 |
| R226 | 7030003560 | S.RES ERJ3GEYJ 103 V (10 k) | B | 94.1/80.9 |
| R227 | 7030003560 | S.RES ERJ3GEYJ 103 V (10 k) | T | 92/98.2 |
| R228 | 7030003560 | S.RES ERJ3GEYJ 103 V (10 k) | T | 92/95.1 |
| R229 | 7030003560 | S.RES ERJ3GEYJ 103 V (10 k) | T | 91.2/92 |
| R230 | 7030003560 | S.RES ERJ3GEYJ 103 V (10 k) | T | 93.3/95.1 |
| R231 | 7030003560 | S.RES ERJ3GEYJ 103 V (10 k) | T | 92.5/92.2 |
| R232 | 7030003560 | S.RES ERJ3GEYJ 103 V (10 k) | B | 93.4/83.2 |
| R233 | 7030003560 | S.RES ERJ3GEYJ 103 V (10 k) | T | 93.3/98.2 |
| R234 | 7030003560 | S.RES ERJ3GEYJ 103 V (10 k) | T | 93.8/92.2 |
| R235 | 7030003560 | S.RES ERJ3GEYJ 103 V (10 k) | T | 94.6/95.1 |
| R236 | 7030003560 | S.RES ERJ3GEYJ 103 V (10 k) | T | 94.6/98.2 |
| R237 | 7030003560 | S.RES ERJ3GEYJ 103 V (10 k) | B | 94.7/83.2 |
| R238 | 7030003560 | S.RES ERJ3GEYJ 103 V (10 k) | T | 95.1/92.2 |
| R239 | 7030003560 | S.RES ERJ3GEYJ 103 V (10 k) | T | 95.9/95.1 |
| R240 | 7030003560 | S.RES ERJ3GEYJ 103 V (10 k) | T | 95.9/98.2 |
| R241 | 7030003560 | S.RES ERJ3GEYJ 103 V (10 k) | B | 97/89.4 |
| R242 | 7030003560 | S.RES ERJ3GEYJ 103 V (10 k) | T | 96.6/92 |
| R243 | 7030003560 | S.RES ERJ3GEYJ 103 V (10 k) | B | 96/83.2 |
| R244 | 7030003560 | S.RES ERJ3GEYJ 103 V (10 k) | T | 96.6/64.7 |
| R245 | 7030003560 | S.RES ERJ3GEYJ 103 V (10 k) | T | 90.1/64.7 |
| R246 | 7030003560 | S.RES ERJ3GEYJ 103 V (10 k) | T | 88.8/61.6 |
| R247 | 7030003560 | S.RES ERJ3GEYJ 103 V (10 k) | B | 96.7/74.4 |
| R248 | 7030003560 | S.RES ERJ3GEYJ 103 V (10 k) | T | 91.4/64.7 |
| R249 | 7030003560 | S.RES ERJ3GEYJ 103 V (10 k) | T | 86.2/64.7 |
| R250 | 7030003560 | S.RES ERJ3GEYJ 103 V (10 k) | T | 87.5/64.7 |
| R251 | 7030003560 | S.RES ERJ3GEYJ 103 V (10 k) | T | 90.1/61.6 |
| R252 | 7030003560 | S.RES ERJ3GEYJ 103 V (10 k) | T | 87.5/61.6 |
| R253 | 7030003560 | S.RES ERJ3GEYJ 103 V (10 k) | T | 83.7/75 |
| R254 | 7030003560 | S.RES ERJ3GEYJ 103 V (10 k) | T | 88.8/64.7 |
| R255 | 7030003560 | S.RES ERJ3GEYJ 103 V (10 k) | T | 86.2/61.6 |
| R256 | 7030003560 | S.RES ERJ3GEYJ 103 V (10 k) | B | 96.7/77 |
| R257 | 7030003560 | S.RES ERJ3GEYJ 103 V (10 k) | T | 92.7/64.7 |
| R258 | 7030003560 | S.RES ERJ3GEYJ 103 V (10 k) | B | 96.7/78.3 |
| R259 | 7030003560 | S.RES ERJ3GEYJ 103 V (10 k) | T | 92.7/61.6 |
| R260 | 7030003560 | S.RES ERJ3GEYJ 103 V (10 k) | B | 96.7/79.6 |
| R261 | 7030003560 | S.RES ERJ3GEYJ 103 V (10 k) | T | 94/61.6 |
| R262 | 7030003560 | S.RES ERJ3GEYJ 103 V (10 k) | B | 96.7/80.9 |
| R263 | 7030003560 | S.RES ERJ3GEYJ 103 V (10 k) | B | 94/66.6 |
| R264 | 7030003560 | S.RES ERJ3GEYJ 103 V (10 k) | B | 98/72.6 |
| R265 | 7030003560 | S.RES ERJ3GEYJ 103 V (10 k) | T | 92.7/59 |
| R266 | 7030003560 | S.RES ERJ3GEYJ 103 V (10 k) | T | 94/59 |
| R267 | 7030003560 | S.RES ERJ3GEYJ 103 V (10 k) | T | 95.3/64.7 |
| R268 | 7030003560 | S.RES ERJ3GEYJ 103 V (10 k) | B | 91.4/66.6 |
| R269 | 7030003560 | S.RES ERJ3GEYJ 103 V (10 k) | T | 94/64.7 |

## [LOGIC UNIT]

| REF NO. | ORDER NO. | DESCRIPTION | M. | H/V LOCATION |
|---|---|---|---|---|
| R270 | 7030003560 | S.RES ERJ3GEYJ 103 V (10 k) | T | 91.4/61.6 |
| R271 | 7030003560 | S.RES ERJ3GEYJ 103 V (10 k) | T | 91.4/59 |
| R272 | 7030003560 | S.RES ERJ3GEYJ 103 V (10 k) | B | 114.7/71.1 |
| R273 | 7030003560 | S.RES ERJ3GEYJ 103 V (10 k) | T | 114/68.2 |
| R274 | 7030003560 | S.RES ERJ3GEYJ 103 V (10 k) | B | 99.9/79.7 |
| R275 | 7030003560 | S.RES ERJ3GEYJ 103 V (10 k) | T | 111/69.5 |
| R276 | 7030003560 | S.RES ERJ3GEYJ 103 V (10 k) | T | 108.7/64.8 |
| R277 | 7030003560 | S.RES ERJ3GEYJ 103 V (10 k) | T | 114/66.9 |
| R278 | 7030003560 | S.RES ERJ3GEYJ 103 V (10 k) | T | 114/65.6 |
| R279 | 7030003560 | S.RES ERJ3GEYJ 103 V (10 k) | B | 99.9/81 |
| R280 | 7030003560 | S.RES ERJ3GEYJ 103 V (10 k) | T | 114/69.5 |
| R281 | 7030003560 | S.RES ERJ3GEYJ 103 V (10 k) | B | 100.6/75.2 |
| R282 | 7030003560 | S.RES ERJ3GEYJ 103 V (10 k) | B | 99.3/75.2 |
| R283 | 7030003560 | S.RES ERJ3GEYJ 103 V (10 k) | B | 105.6/65.2 |
| R284 | 7030003560 | S.RES ERJ3GEYJ 103 V (10 k) | B | 105.6/66.5 |
| R285 | 7030003560 | S.RES ERJ3GEYJ 103 V (10 k) | B | 99.9/78.4 |
| R286 | 7030003560 | S.RES ERJ3GEYJ 103 V (10 k) | T | 114/64.3 |
| R287 | 7030003560 | S.RES ERJ3GEYJ 103 V (10 k) | T | 103.5/65.6 |
| R288 | 7030003560 | S.RES ERJ3GEYJ 103 V (10 k) | T | 108.7/63.4 |
| R289 | 7030003560 | S.RES ERJ3GEYJ 103 V (10 k) | T | 100.9/65.5 |
| R290 | 7030003560 | S.RES ERJ3GEYJ 103 V (10 k) | B | 99.9/77 |
| R291 | 7030003560 | S.RES ERJ3GEYJ 103 V (10 k) | T | 106.1/65.5 |
| R292 | 7030003560 | S.RES ERJ3GEYJ 103 V (10 k) | B | 94.1/75.7 |
| R293 | 7030003560 | S.RES ERJ3GEYJ 103 V (10 k) | B | 94.1/77 |
| R294 | 7030003560 | S.RES ERJ3GEYJ 103 V (10 k) | B | 94.1/78.3 |
| R295 | 7030003640 | S.RES ERJ3GEYJ 473 V (47 k) | B | 96.7/75.7 |
| R296 | 7030003560 | S.RES ERJ3GEYJ 103 V (10 k) | T | 111.3/87.7 |
| R297 | 7030003560 | S.RES ERJ3GEYJ 103 V (10 k) | T | 111.3/91.6 |
| R298 | 7030003560 | S.RES ERJ3GEYJ 103 V (10 k) | T | 118.4/91.6 |
| R299 | 7030003560 | S.RES ERJ3GEYJ 103 V (10 k) | T | 111.3/90.3 |
| R300 | 7030003560 | S.RES ERJ3GEYJ 103 V (10 k) | T | 114.5/90.3 |
| R301 | 7030003560 | S.RES ERJ3GEYJ 103 V (10 k) | T | 118.4/90.3 |
| R302 | 7030003560 | S.RES ERJ3GEYJ 103 V (10 k) | T | 114.5/91.6 |
| R303 | 7030003560 | S.RES ERJ3GEYJ 103 V (10 k) | T | 118.4/89 |
| R304 | 7030003560 | S.RES ERJ3GEYJ 103 V (10 k) | T | 114.5/89 |
| R305 | 7030003560 | S.RES ERJ3GEYJ 103 V (10 k) | T | 111.3/89 |
| R306 | 7030003560 | S.RES ERJ3GEYJ 103 V (10 k) | T | 111.3/86.4 |
| R307 | 7030003560 | S.RES ERJ3GEYJ 103 V (10 k) | T | 114.5/86.4 |
| R308 | 7030003560 | S.RES ERJ3GEYJ 103 V (10 k) | T | 118.4/87.7 |
| R309 | 7030003560 | S.RES ERJ3GEYJ 103 V (10 k) | T | 114.5/87.7 |
| R310 | 7030003560 | S.RES ERJ3GEYJ 103 V (10 k) | T | 111/68.2 |
| R311 | 7030003560 | S.RES ERJ3GEYJ 103 V (10 k) | B | 116.1/71.1 |
| R313 | 7030003410 | S.RES ERJ3GEYJ 561 V (560) | T | 209.8/36.7 |
| R314 | 7030003340 | S.RES ERJ3GEYJ 151 V (150) | B | 216.8/32.5 |
| R315 | 7030003340 | S.RES ERJ3GEYJ 151 V (150) | B | 218.1/32.5 |
| R316 | 7030003340 | S.RES ERJ3GEYJ 151 V (150) | B | 216.8/29.5 |
| R317 | 7030003340 | S.RES ERJ3GEYJ 151 V (150) | B | 218.1/29.5 |
| R318 | 7030003340 | S.RES ERJ3GEYJ 151 V (150) | B | 216.8/26.5 |
| R319 | 7030003340 | S.RES ERJ3GEYJ 151 V (150) | B | 218.1/26.5 |
| R320 | 7030003240 | S.RES ERJ3GEYJ 220 V (22) | T | 203.9/17.8 |
| R321 | 7030003240 | S.RES ERJ3GEYJ 220 V (22) | T | 203.9/20.7 |
| R322 | 7030003250 | S.RES ERJ3GEYJ 270 V (27) | B | 213.9/7.4 |
| R323 | 7030003250 | S.RES ERJ3GEYJ 270 V (27) | B | 215.9/3.3 |
| R324 | 7030003580 | S.RES ERJ3GEYJ 153 V (15 k) | B | 213.9/6.1 |
| R325 | 7030003580 | S.RES ERJ3GEYJ 153 V (15 k) | B | 215.9/4.6 |
| R326 | 7030003250 | S.RES ERJ3GEYJ 270 V (27) | B | 227.4/4.9 |
| R327 | 7030003250 | S.RES ERJ3GEYJ 270 V (27) | B | 230/4.9 |
| R328 | 7030003580 | S.RES ERJ3GEYJ 153 V (15 k) | B | 228.1/3.1 |
| R329 | 7030003580 | S.RES ERJ3GEYJ 153 V (15 k) | B | 230.7/3.1 |
| R330 | 7030003560 | S.RES ERJ3GEYJ 103 V (10 k) | B | 222.6/38.8 |
| R331 | 7030003560 | S.RES ERJ3GEYJ 103 V (10 k) | B | 223.9/38.8 |
| R332 | 7030003640 | S.RES ERJ3GEYJ 473 V (47 k) | B | 104.6/25.8 |
| R333 | 7030003640 | S.RES ERJ3GEYJ 473 V (47 k) | B | 113.9/19.1 |
| R334 | 7030003640 | S.RES ERJ3GEYJ 473 V (47 k) | B | 110.7/19.5 |
| R335 | 7030003280 | S.RES ERJ3GEYJ 470 V (47) | B | 109.8/26.4 |
| R336 | 7030003640 | S.RES ERJ3GEYJ 473 V (47 k) | B | 115.5/25.8 |
| R337 | 7030003640 | S.RES ERJ3GEYJ 473 V (47 k) | B | 125.1/23.6 |
| R338 | 7030003640 | S.RES ERJ3GEYJ 473 V (47 k) | B | 125.2/20.6 |
| R339 | 7030003280 | S.RES ERJ3GEYJ 470 V (47) | B | 120.1/27.7 |
| R340 | 7030003280 | S.RES ERJ3GEYJ 470 V (47) | B | 130.8/38.1 |
| R341 | 7030003640 | S.RES ERJ3GEYJ 473 V (47 k) | B | 135.7/33.5 |
| R342 | 7030003280 | S.RES ERJ3GEYJ 470 V (47) | B | 121.7/36.9 |
| R343 | 7030003640 | S.RES ERJ3GEYJ 473 V (47 k) | B | 119.5/30 |
| R344 | 7030003520 | S.RES ERJ3GEYJ 472 V (4.7 k) | B | 129.1/29.1 |
| R345 | 7030003520 | S.RES ERJ3GEYJ 472 V (4.7 k) | B | 116.9/30 |
| R350 | 7030003860 | S.RES ERJ3GE JPW V | T | 119.5/49 |
| R351 | 7030003860 | S.RES ERJ3GE JPW V | B | 100.6/83.2 |
| R353 | 7030003860 | S.RES ERJ3GE JPW V | B | 187.5/12.3 |
| R355 | 7030003860 | S.RES ERJ3GE JPW V | B | 187.5/13.6 |
| R356 | 7030003860 | S.RES ERJ3GE JPW V | B | 185.3/9.9 |
| R361 | 7030003320 | S.RES ERJ3GEYJ 101 V (100) | T | 193.5/25.6 |
| R401 | 7030003320 | S.RES ERJ3GEYJ 101 V (100) | B | 39.9/44.9 |
| R403 | 7030003560 | S.RES ERJ3GEYJ 103 V (10 k) | B | 16.5/35.6 |
| R404 | 7030003560 | S.RES ERJ3GEYJ 103 V (10 k) | B | 22.8/35.6 |
| R405 | 7030003560 | S.RES ERJ3GEYJ 103 V (10 k) | B | 7.9/40.8 |
| R406 | 7030003560 | S.RES ERJ3GEYJ 103 V (10 k) | T | 24.3/46.5 |
| R407 | 7030003560 | S.RES ERJ3GEYJ 103 V (10 k) | T | 22.5/47.2 |
| R408 | 7030003560 | S.RES ERJ3GEYJ 103 V (10 k) | T | 28.1/51.8 |
| R409 | 7030003560 | S.RES ERJ3GEYJ 103 V (10 k) | T | 22.9/57 |
| R410 | 7030003560 | S.RES ERJ3GEYJ 103 V (10 k) | T | 20.3/57 |
| R411 | 7030003560 | S.RES ERJ3GEYJ 103 V (10 k) | T | 24.2/57 |
| R412 | 7030003560 | S.RES ERJ3GEYJ 103 V (10 k) | T | 25.5/57 |
| R413 | 7030003560 | S.RES ERJ3GEYJ 103 V (10 k) | T | 26.8/57 |
| R414 | 7030003560 | S.RES ERJ3GEYJ 103 V (10 k) | T | 21.6/57 |
| R415 | 7030003560 | S.RES ERJ3GEYJ 103 V (10 k) | B | 25.6/26.2 |
| R416 | 7030003560 | S.RES ERJ3GEYJ 103 V (10 k) | B | 24.3/26.2 |
| R417 | 7030003560 | S.RES ERJ3GEYJ 103 V (10 k) | B | 23/26.2 |
| R418 | 7030003320 | S.RES ERJ3GEYJ 101 V (100) | B | 36.1/82.5 |
| R419 | 7030003440 | S.RES ERJ3GEYJ 102 V (1 k) | B | 10.4/83.3 |
| R420 | 7030003580 | S.RES ERJ3GEYJ 153 V (15 k) | B | 11/81.5 |
| R421 | 7030003470 | S.RES ERJ3GEYJ 182 V (1.8 k) | B | 12.3/76.4 |
| R422 | 7030003250 | S.RES ERJ3GEYJ 270 V (27) | B | 11.5/74.2 |
| R423 | 7030003560 | S.RES ERJ3GEYJ 103 V (10 k) | B | 14.6/90.2 |
| R424 | 7030003560 | S.RES ERJ3GEYJ 103 V (10 k) | B | 11.5/85.7 |

M.=Mounted side (T: Mounted on the Top side, B: Mounted on the Bottom side)
S.=Surface mount

## [LOGIC UNIT]

| REF NO. | ORDER NO. | DESCRIPTION | M. | H/V LOCATION |
|---|---|---|---|---|
| R425 | 7030003380 | S.RES ERJ3GEYJ 331 V (330) | T | 9.3/96.4 |
| R426 | 7030003380 | S.RES ERJ3GEYJ 331 V (330) | T | 9.3/94.9 |
| R427 | 7030003380 | S.RES ERJ3GEYJ 331 V (330) | T | 9.3/93.1 |
| R428 | 7030003320 | S.RES ERJ3GEYJ 101 V (100) | B | 147.4/21.2 |
| R429 | 7030003320 | S.RES ERJ3GEYJ 101 V (100) | B | 148.7/21.2 |
| R430 | 7030003320 | S.RES ERJ3GEYJ 101 V (100) | B | 151.3/21.2 |
| R431 | 7030003320 | S.RES ERJ3GEYJ 101 V (100) | B | 150/21.2 |
| R432 | 7030003320 | S.RES ERJ3GEYJ 101 V (100) | B | 154.3/15.2 |
| R433 | 7030003320 | S.RES ERJ3GEYJ 101 V (100) | B | 155.6/15.2 |
| R434 | 7030003320 | S.RES ERJ3GEYJ 101 V (100) | B | 155.6/18.4 |
| R435 | 7030003320 | S.RES ERJ3GEYJ 101 V (100) | B | 154.3/18.4 |
| R436 | 7030003340 | S.RES ERJ3GEYJ 151 V (150) | B | 156.5/6.7 |
| R437 | 7030003340 | S.RES ERJ3GEYJ 151 V (150) | B | 158.5/6.7 |
| R438 | 7030003340 | S.RES ERJ3GEYJ 151 V (150) | B | 162.5/6.7 |
| R439 | 7030003340 | S.RES ERJ3GEYJ 151 V (150) | B | 164.5/6.7 |
| R440 | 7030003340 | S.RES ERJ3GEYJ 151 V (150) | B | 156.5/4.1 |
| R441 | 7030003340 | S.RES ERJ3GEYJ 151 V (150) | B | 158.5/4.1 |
| R442 | 7030003340 | S.RES ERJ3GEYJ 151 V (150) | B | 164.5/4.1 |
| R443 | 7030003340 | S.RES ERJ3GEYJ 151 V (150) | B | 162.5/4.1 |
| R450 | 7030003860 | S.RES ERJ3GE JPW V | T | 36.8/35.4 |
| R601 | 7030003620 | S.RES ERJ3GEYJ 333 V (33 k) | B | 175/55.4 |
| R602 | 7030003590 | S.RES ERJ3GEYJ 183 V (18 k) | B | 171.3/53.1 |
| R603 | 7030003540 | S.RES ERJ3GEYJ 682 V (6.8 k) | B | 173.1/55.2 |
| R604 | 7030003640 | S.RES ERJ3GEYJ 473 V (47 k) | B | 171.3/55.7 |
| R605 | 7030003680 | S.RES ERJ3GEYJ 104 V (100 k) | B | 167.3/55 |
| R606 | 7030003680 | S.RES ERJ3GEYJ 104 V (100 k) | B | 102.8/31.6 |
| R607 | 7030003350 | S.RES ERJ3GEYJ 181 V (180) | B | 87.7/14.2 |
| R608 | 7030003520 | S.RES ERJ3GEYJ 472 V (4.7 k) | B | 90.5/14.2 |
| R609 | 7030003440 | S.RES ERJ3GEYJ 102 V (1 k) | T | 80.8/23.6 |
| R610 | 7030003440 | S.RES ERJ3GEYJ 102 V (1 k) | T | 80.8/24.9 |
| R611 | 7030003440 | S.RES ERJ3GEYJ 102 V (1 k) | T | 80.8/26.2 |
| R612 | 7030003440 | S.RES ERJ3GEYJ 102 V (1 k) | T | 80.1/27.5 |
| R613 | 7030003440 | S.RES ERJ3GEYJ 102 V (1 k) | T | 83.4/27.9 |
| R614 | 7030003440 | S.RES ERJ3GEYJ 102 V (1 k) | T | 83.4/29.2 |
| R615 | 7030003440 | S.RES ERJ3GEYJ 102 V (1 k) | T | 83.4/30.5 |
| R616 | 7030003440 | S.RES ERJ3GEYJ 102 V (1 k) | T | 83.4/31.8 |
| R617 | 7030003800 | S.RES ERJ3GEYJ 105 V (1 M) | T | 86.5/31.8 |
| R618 | 7030003800 | S.RES ERJ3GEYJ 105 V (1 M) | T | 86.5/30.5 |
| R619 | 7030003800 | S.RES ERJ3GEYJ 105 V (1 M) | T | 86.5/29.2 |
| R620 | 7030003800 | S.RES ERJ3GEYJ 105 V (1 M) | T | 86.5/27.9 |
| R621 | 7030003800 | S.RES ERJ3GEYJ 105 V (1 M) | T | 84.1/26.6 |
| R622 | 7030003800 | S.RES ERJ3GEYJ 105 V (1 M) | T | 84.1/25.3 |
| R623 | 7030003800 | S.RES ERJ3GEYJ 105 V (1 M) | T | 84.3/23.6 |
| R624 | 7030003800 | S.RES ERJ3GEYJ 105 V (1 M) | T | 84.3/22.3 |
| R625 | 7030003640 | S.RES ERJ3GEYJ 473 V (47 k) | B | 68.6/27.3 |
| R626 | 7030003600 | S.RES ERJ3GEYJ 223 V (22 k) | B | 68.6/28.6 |
| R627 | 7030003640 | S.RES ERJ3GEYJ 473 V (47 k) | B | 66.3/36.4 |
| R628 | 7030003640 | S.RES ERJ3GEYJ 473 V (47 k) | B | 66.3/35.1 |
| R629 | 7030003640 | S.RES ERJ3GEYJ 473 V (47 k) | B | 71.2/34.9 |
| R630 | 7030003520 | S.RES ERJ3GEYJ 472 V (4.7 k) | B | 68.6/32.5 |
| R631 | 7030003520 | S.RES ERJ3GEYJ 472 V (4.7 k) | T | 67.4/27 |
| R632 | 7030003520 | S.RES ERJ3GEYJ 472 V (4.7 k) | T | 67.4/30.9 |
| R633 | 7030003520 | S.RES ERJ3GEYJ 472 V (4.7 k) | T | 67.4/28.3 |
| R634 | 7030003520 | S.RES ERJ3GEYJ 472 V (4.7 k) | B | 66.3/33.8 |
| R635 | 7030003520 | S.RES ERJ3GEYJ 472 V (4.7 k) | T | 67.4/29.6 |
| R636 | 7030003640 | S.RES ERJ3GEYJ 473 V (47 k) | B | 58.1/19.5 |
| R637 | 7030003640 | S.RES ERJ3GEYJ 473 V (47 k) | B | 61.8/19.5 |
| R639 | 7030003640 | S.RES ERJ3GEYJ 473 V (47 k) | T | 99.1/19 |
| R640 | 7030003640 | S.RES ERJ3GEYJ 473 V (47 k) | T | 97.8/19 |
| R641 | 7030003640 | S.RES ERJ3GEYJ 473 V (47 k) | T | 96.5/19 |
| R642 | 7030003640 | S.RES ERJ3GEYJ 473 V (47 k) | T | 95.2/19 |
| R643 | 7030003600 | S.RES ERJ3GEYJ 223 V (22 k) | B | 80.9/46.3 |
| R644 | 7030003560 | S.RES ERJ3GEYJ 103 V (10 k) | B | 82.2/46.3 |
| R645 | 7030003520 | S.RES ERJ3GEYJ 472 V (4.7 k) | T | 93.1/40.9 |
| R646 | 7030003720 | S.RES ERJ3GEYJ 224 V (220 k) | B | 101.8/41.5 |
| R647 | 7030003720 | S.RES ERJ3GEYJ 224 V (220 k) | B | 102.8/44.1 |
| R648 | 7030003720 | S.RES ERJ3GEYJ 224 V (220 k) | B | 103.8/41.5 |
| R649 | 7030003720 | S.RES ERJ3GEYJ 224 V (220 k) | B | 104.8/44.1 |
| R650 | 7030003720 | S.RES ERJ3GEYJ 224 V (220 k) | B | 105.8/41.5 |
| R651 | 7030003720 | S.RES ERJ3GEYJ 224 V (220 k) | B | 106.8/44.1 |
| R652 | 7030003720 | S.RES ERJ3GEYJ 224 V (220 k) | B | 107.8/41.5 |
| R653 | 7030003720 | S.RES ERJ3GEYJ 224 V (220 k) | B | 108.7/44.1 |
| R654 | 7030003520 | S.RES ERJ3GEYJ 472 V (4.7 k) | B | 102.8/39.2 |
| R655 | 7030003520 | S.RES ERJ3GEYJ 472 V (4.7 k) | B | 102.8/37.7 |
| R656 | 7030003520 | S.RES ERJ3GEYJ 472 V (4.7 k) | T | 144.4/59.9 |
| R657 | 7030003720 | S.RES ERJ3GEYJ 224 V (220 k) | B | 68.6/26 |
| R658 | 7030003640 | S.RES ERJ3GEYJ 473 V (47 k) | B | 84.2/44.2 |
| R659 | 7030003640 | S.RES ERJ3GEYJ 473 V (47 k) | B | 84.2/45.5 |
| R660 | 7030003640 | S.RES ERJ3GEYJ 473 V (47 k) | B | 102.8/29.5 |
| R661 | 7030003640 | S.RES ERJ3GEYJ 473 V (47 k) | B | 69.4/16.4 |
| R662 | 7030003640 | S.RES ERJ3GEYJ 473 V (47 k) | B | 89.2/14.2 |
| R663 | 7030003640 | S.RES ERJ3GEYJ 473 V (47 k) | B | 71.2/15.9 |
| R664 | 7030003640 | S.RES ERJ3GEYJ 473 V (47 k) | B | 71.2/17.2 |
| R665 | 7030003560 | S.RES ERJ3GEYJ 103 V (10 k) | B | 93.1/14.2 |
| R666 | 7030003560 | S.RES ERJ3GEYJ 103 V (10 k) | B | 78.3/16.5 |
| R667 | 7030003560 | S.RES ERJ3GEYJ 103 V (10 k) | B | 77/16 |
| R668 | 7030003640 | S.RES ERJ3GEYJ 473 V (47 k) | B | 84.9/16.8 |
| R669 | 7030003640 | S.RES ERJ3GEYJ 473 V (47 k) | B | 71.2/14.6 |
| R670 | 7030003640 | S.RES ERJ3GEYJ 473 V (47 k) | T | 94.4/43.5 |
| R671 | 7030003640 | S.RES ERJ3GEYJ 473 V (47 k) | T | 95.7/43.5 |
| R672 | 7030003640 | S.RES ERJ3GEYJ 473 V (47 k) | B | 75.7/16.8 |
| R673 | 7030003640 | S.RES ERJ3GEYJ 473 V (47 k) | B | 74.4/16.8 |
| R674 | 7030003640 | S.RES ERJ3GEYJ 473 V (47 k) | T | 91.3/36.8 |
| R675 | 7030003640 | S.RES ERJ3GEYJ 473 V (47 k) | T | 89.1/31.8 |
| R676 | 7030003640 | S.RES ERJ3GEYJ 473 V (47 k) | B | 94.4/14.2 |
| R677 | 7030003520 | S.RES ERJ3GEYJ 472 V (4.7 k) | T | 146.1/65.1 |
| R678 | 7030003720 | S.RES ERJ3GEYJ 224 V (220 k) | B | 68.6/22.1 |
| R679 | 7030003640 | S.RES ERJ3GEYJ 473 V (47 k) | B | 91.8/14.2 |
| R680 | 7030003520 | S.RES ERJ3GEYJ 472 V (4.7 k) | T | 144.6/65.1 |
| R681 | 7030003520 | S.RES ERJ3GEYJ 472 V (4.7 k) | T | 147.5/65.1 |
| R682 | 7030003520 | S.RES ERJ3GEYJ 472 V (4.7 k) | B | 152.7/60.8 |
| R683 | 7030003720 | S.RES ERJ3GEYJ 224 V (220 k) | B | 68.6/23.4 |
| R684 | 7030003640 | S.RES ERJ3GEYJ 473 V (47 k) | B | 80.2/16.2 |
| R685 | 7030003520 | S.RES ERJ3GEYJ 472 V (4.7 k) | B | 152.7/62.1 |

## [LOGIC UNIT]

| REF NO. | ORDER NO. | DESCRIPTION | M. | H/V LOCATION |
|---|---|---|---|---|
| R686 | 7030003520 | S.RES ERJ3GEYJ 472 V (4.7 k) | B | 152.7/59.5 |
| R687 | 7030003520 | S.RES ERJ3GEYJ 472 V (4.7 k) | B | 152.1/53.6 |
| R688 | 7030003720 | S.RES ERJ3GEYJ 224 V (220 k) | B | 68.6/24.7 |
| R689 | 7030003520 | S.RES ERJ3GEYJ 472 V (4.7 k) | B | 153/56.2 |
| R690 | 7030003520 | S.RES ERJ3GEYJ 472 V (4.7 k) | B | 153/54.9 |
| R691 | 7030003640 | S.RES ERJ3GEYJ 473 V (47 k) | B | 66/31.9 |
| R701 | 7030003860 | S.RES ERJ3GE JPW V | T | 93.1/43.5 |
| R801 | 7030003560 | S.RES ERJ3GEYJ 103 V (10 k) | T | 158.2/72.8 |
| R802 | 7030006210 | S.RES ERJ12YJ4R7U (4.7) | T | 162.3/71.2 |
| R803 | 7030003440 | S.RES ERJ3GEYJ 102 V (1 k) | T | 159.5/72.8 |
| R804 | 7030006210 | S.RES ERJ12YJ4R7U (4.7) | T | 168.9/71.2 |
| R805 | 7030003440 | S.RES ERJ3GEYJ 102 V (1 k) | T | 166.1/72.8 |
| R806 | 7030003560 | S.RES ERJ3GEYJ 103 V (10 k) | T | 164.8/72.8 |
| R807 | 7030006210 | S.RES ERJ12YJ4R7U (4.7) | T | 175.5/71.2 |
| R808 | 7030003440 | S.RES ERJ3GEYJ 102 V (1 k) | T | 173/72.8 |
| R809 | 7030003560 | S.RES ERJ3GEYJ 103 V (10 k) | T | 171.6/72.8 |
| R810 | 7030003320 | S.RES ERJ3GEYJ 101 V (100) | B | 154.9/29.9 |
| R811 | 7030003320 | S.RES ERJ3GEYJ 101 V (100) | B | 154.9/27.5 |
| R812 | 7030010440 | S.RES ERJ1TYJ 680U (68) | B | 133/111.2 |
| R813 | 7030003560 | S.RES ERJ3GEYJ 103 V (10 k) | B | 192.6/10 |
| R814 | 7030003440 | S.RES ERJ3GEYJ 102 V (1 k) | T | 105.6/116.6 |
| R816 | 7030003560 | S.RES ERJ3GEYJ 103 V (10 k) | T | 158.9/74.7 |
| R817 | 7030003560 | S.RES ERJ3GEYJ 103 V (10 k) | T | 161.5/74.7 |
| R818 | 7030000140 | S.RES MCR10EZHJ 10 (100) | T | 155.6/78.2 |
| R819 | 7030007190 | S.RES ERJ12YJ220U (22) | T | 135.4/111 |
| R821 | 7030003370 | S.RES ERJ3GEYJ 271 V (270) | B | 15.3/100 |
| R822 | 7030009720 | S.RES ERJ12YJ102U (1 k) | T | 19.9/103.2 |
| R823 | 7030003810 | S.RES ERJ3GEYJ 125 V (1.2 M) | B | 16.8/109.5 |
| R824 | 7030003810 | S.RES ERJ3GEYJ 125 V (1.2 M) | B | 13.5/107.1 |
| R825 | 7030008170 | S.RES ERJ12YJ1R0U (1) | B | 37/112.2 |
| R826 | 7030003610 | S.RES ERJ3GEYJ 273 V (27 k) | B | 16.8/110.8 |
| R827 | 7030003610 | S.RES ERJ3GEYJ 273 V (27 k) | B | 13.5/109.9 |
| R828 | 7030003560 | S.RES ERJ3GEYJ 103 V (10 k) | B | 25.4/101.5 |
| R829 | 7030000340 | S.RES MCR10EZHJ 470 (471) | B | 20.6/104.5 |
| R830 | 7030003600 | S.RES ERJ3GEYJ 223 V (22 k) | B | 18.5/100 |
| R832 | 7030003600 | S.RES ERJ3GEYJ 223 V (22 k) | B | 18.5/98.7 |
| R833 | 7030003560 | S.RES ERJ3GEYJ 103 V (10 k) | B | 18.5/97.4 |
| R850 | 7030003860 | S.RES ERJ3GE JPW V | B | 182.4/50.2 |
| R851 | 7030003680 | S.RES ERJ3GEYJ 104 V (100 k) | B | 187.1/61.9 |
| R852 | 7030003680 | S.RES ERJ3GEYJ 104 V (100 k) | B | 185/61.9 |
| R853 | 7030003770 | S.RES ERJ3GEYJ 564 V (560 k) | B | 183.7/61.9 |
| R854 | 7030003770 | S.RES ERJ3GEYJ 564 V (560 k) | B | 188.4/61.9 |
| R855 | 7030003520 | S.RES ERJ3GEYJ 472 V (4.7 k) | B | 191.5/61.9 |
| R856 | 7030003520 | S.RES ERJ3GEYJ 472 V (4.7 k) | B | 180.6/61.9 |
| R857 | 7030003560 | S.RES ERJ3GEYJ 103 V (10 k) | B | 144.7/14.2 |
| R858 | 7030003460 | S.RES ERJ3GEYJ 152 V (1.5 k) | B | 144.7/12.9 |
| R859 | 7030003470 | S.RES ERJ3GEYJ 182 V (1.8 k) | B | 142.1/12.9 |
| R860 | 7030003500 | S.RES ERJ3GEYJ 332 V (3.3 k) | B | 144.7/15.5 |
| R861 | 7030003480 | S.RES ERJ3GEYJ 222 V (2.2 k) | B | 141.4/14.9 |
| R862 | 7030003380 | S.RES ERJ3GEYJ 331 V (330) | B | 147.7/3.8 |
| R863 | 7030003560 | S.RES ERJ3GEYJ 103 V (10 k) | B | 134.5/21.1 |
| R864 | 7030003460 | S.RES ERJ3GEYJ 152 V (1.5 k) | B | 134.5/19.8 |
| R865 | 7030003470 | S.RES ERJ3GEYJ 182 V (1.8 k) | B | 134.5/18.5 |
| R866 | 7030003500 | S.RES ERJ3GEYJ 332 V (3.3 k) | B | 131.7/17.2 |
| R867 | 7030003480 | S.RES ERJ3GEYJ 222 V (2.2 k) | B | 131.7/18.5 |
| R868 | 7030003380 | S.RES ERJ3GEYJ 331 V (330) | B | 134.1/3.8 |
| R869 | 7030003560 | S.RES ERJ3GEYJ 103 V (10 k) | B | 114.1/30 |
| R870 | 7030003560 | S.RES ERJ3GEYJ 103 V (10 k) | B | 144.7/7.2 |
| R871 | 7030003460 | S.RES ERJ3GEYJ 152 V (1.5 k) | B | 143.4/7.2 |
| R872 | 7030003470 | S.RES ERJ3GEYJ 182 V (1.8 k) | B | 142.1/7.2 |
| R873 | 7030003500 | S.RES ERJ3GEYJ 332 V (3.3 k) | B | 138.2/7.2 |
| R874 | 7030003480 | S.RES ERJ3GEYJ 222 V (2.2 k) | B | 139.5/7.2 |
| R875 | 7030003380 | S.RES ERJ3GEYJ 331 V (330) | B | 140.9/3.8 |
| R876 | 7030003410 | S.RES ERJ3GEYJ 561 V (560) | B | 120.5/14.9 |
| R877 | 7030003700 | S.RES ERJ3GEYJ 154 V (150 k) | B | 120.5/13.6 |
| R878 | 7030003520 | S.RES ERJ3GEYJ 472 V (4.7 k) | B | 120.5/12.3 |
| R879 | 7030003550 | S.RES ERJ3GEYJ 822 V (8.2 k) | B | 117.9/4.2 |
| R880 | 7030003690 | S.RES ERJ3GEYJ 124 V (120 k) | B | 119.7/5 |
| R881 | 7030003520 | S.RES ERJ3GEYJ 472 V (4.7 k) | B | 122.3/5 |
| R882 | 7030003410 | S.RES ERJ3GEYJ 561 V (560) | B | 108.9/15.9 |
| R883 | 7030003550 | S.RES ERJ3GEYJ 822 V (8.2 k) | B | 108.9/14.6 |
| R884 | 7030003520 | S.RES ERJ3GEYJ 472 V (4.7 k) | B | 108.9/13.3 |
| R885 | 7030003410 | S.RES ERJ3GEYJ 561 V (560) | B | 108.9/4.1 |
| R886 | 7030003550 | S.RES ERJ3GEYJ 822 V (8.2 k) | B | 109.7/6.2 |
| R887 | 7030003520 | S.RES ERJ3GEYJ 472 V (4.7 k) | B | 108.4/6.2 |
| R888 | 7030003360 | S.RES ERJ3GEYJ 221 V (220) | B | 181.6/48 |
| R889 | 7030003640 | S.RES ERJ3GEYJ 473 V (47 k) | B | 184.5/48.3 |
| R890 | 7030003360 | S.RES ERJ3GEYJ 221 V (220) | B | 191/47.8 |
| R891 | 7030003560 | S.RES ERJ3GEYJ 103 V (10 k) | B | 188.2/48.3 |
| R892 | 7030003730 | S.RES ERJ3GEYJ 274 V (270 k) | B | 190.2/50.2 |
| R893 | 7030003680 | S.RES ERJ3GEYJ 104 V (100 k) | B | 183.7/50.2 |
| R894 | 7030003200 | S.RES ERJ3GEYJ 100 V (10) | B | 193.2/55.7 |
| R895 | 7030003680 | S.RES ERJ3GEYJ 104 V (100 k) | B | 188.9/50.2 |
| R896 | 7030003200 | S.RES ERJ3GEYJ 100 V (10) | B | 192.9/52.8 |
| R901 | 7030003200 | S.RES ERJ3GEYJ 100 V (10) | T | 165.7/37.7 |
| R902 | 7030003200 | S.RES ERJ3GEYJ 100 V (10) | T | 166.1/30.8 |
| R903 | 7030003200 | S.RES ERJ3GEYJ 100 V (10) | T | 166.6/40.3 |
| R904 | 7030003200 | S.RES ERJ3GEYJ 100 V (10) | T | 167.1/28.2 |
| R905 | 7030003200 | S.RES ERJ3GEYJ 100 V (10) | T | 167.6/37.7 |
| R906 | 7030003200 | S.RES ERJ3GEYJ 100 V (10) | T | 168.1/30.8 |
| R907 | 7030003200 | S.RES ERJ3GEYJ 100 V (10) | T | 168.6/40.3 |
| R908 | 7030003200 | S.RES ERJ3GEYJ 100 V (10) | T | 169.1/28.2 |
| R909 | 7030003200 | S.RES ERJ3GEYJ 100 V (10) | T | 169.6/37.7 |
| R910 | 7030003200 | S.RES ERJ3GEYJ 100 V (10) | T | 170.1/30.8 |
| R911 | 7030003200 | S.RES ERJ3GEYJ 100 V (10) | T | 170.6/40.3 |
| R912 | 7030003200 | S.RES ERJ3GEYJ 100 V (10) | T | 171.6/37.7 |
| R913 | 7030003200 | S.RES ERJ3GEYJ 100 V (10) | T | 172.1/30.8 |
| R914 | 7030003200 | S.RES ERJ3GEYJ 100 V (10) | T | 172.6/40.3 |
| R915 | 7030003200 | S.RES ERJ3GEYJ 100 V (10) | T | 173.1/28.2 |
| R916 | 7030003200 | S.RES ERJ3GEYJ 100 V (10) | T | 173.6/37.7 |
| R917 | 7030003200 | S.RES ERJ3GEYJ 100 V (10) | T | 174.1/30.8 |
| R918 | 7030003200 | S.RES ERJ3GEYJ 100 V (10) | T | 174.6/40.3 |
| R919 | 7030003200 | S.RES ERJ3GEYJ 100 V (10) | T | 175.1/28.2 |
| R920 | 7030003200 | S.RES ERJ3GEYJ 100 V (10) | T | 175.6/37.7 |

M.=Mounted side (T: Mounted on the Top side, B: Mounted on the Bottom side)
S.=Surface mount

## [LOGIC UNIT]

| REF NO. | ORDER NO. | DESCRIPTION | M. | H/V LOCATION |
|---|---|---|---|---|
| R921 | 7030003200 | S.RES ERJ3GEYJ 100 V (10) | T | 176.1/30.8 |
| R922 | 7030003200 | S.RES ERJ3GEYJ 100 V (10) | T | 176.6/40.3 |
| R923 | 7030003200 | S.RES ERJ3GEYJ 100 V (10) | T | 177.1/28.2 |
| R924 | 7030003200 | S.RES ERJ3GEYJ 100 V (10) | T | 177.6/37.7 |
| R925 | 7030003200 | S.RES ERJ3GEYJ 100 V (10) | T | 178.1/30.8 |
| R926 | 7030003200 | S.RES ERJ3GEYJ 100 V (10) | T | 178.6/40.3 |
| R927 | 7030003200 | S.RES ERJ3GEYJ 100 V (10) | T | 179.1/28.2 |
| R928 | 7030003200 | S.RES ERJ3GEYJ 100 V (10) | T | 179.6/37.7 |
| R929 | 7030003200 | S.RES ERJ3GEYJ 100 V (10) | T | 180.1/30.8 |
| R930 | 7030003200 | S.RES ERJ3GEYJ 100 V (10) | T | 180.6/40.3 |
| R931 | 7030003200 | S.RES ERJ3GEYJ 100 V (10) | T | 181.1/28.2 |
| R932 | 7030003200 | S.RES ERJ3GEYJ 100 V (10) | T | 182.1/30.8 |
| R933 | 7030003200 | S.RES ERJ3GEYJ 100 V (10) | T | 182.6/40.3 |
| R934 | 7030003200 | S.RES ERJ3GEYJ 100 V (10) | T | 183.1/28.2 |
| R935 | 7030003200 | S.RES ERJ3GEYJ 100 V (10) | T | 183.6/37.7 |
| R936 | 7030003200 | S.RES ERJ3GEYJ 100 V (10) | T | 184.1/30.8 |
| R937 | 7030003200 | S.RES ERJ3GEYJ 100 V (10) | T | 185.1/28.2 |
| R938 | 7030003200 | S.RES ERJ3GEYJ 100 V (10) | T | 133/37.7 |
| R939 | 7030003200 | S.RES ERJ3GEYJ 100 V (10) | T | 134.2/30.8 |
| R940 | 7030003200 | S.RES ERJ3GEYJ 100 V (10) | T | 134.4/37.8 |
| R941 | 7030003200 | S.RES ERJ3GEYJ 100 V (10) | T | 135.2/28.3 |
| R942 | 7030003200 | S.RES ERJ3GEYJ 100 V (10) | T | 135.7/37.7 |
| R943 | 7030003200 | S.RES ERJ3GEYJ 100 V (10) | T | 136.2/30.8 |
| R944 | 7030003200 | S.RES ERJ3GEYJ 100 V (10) | T | 136.7/40.3 |
| R945 | 7030003200 | S.RES ERJ3GEYJ 100 V (10) | T | 137.2/28.3 |
| R946 | 7030003200 | S.RES ERJ3GEYJ 100 V (10) | T | 137.7/37.7 |
| R947 | 7030003200 | S.RES ERJ3GEYJ 100 V (10) | T | 138.2/30.8 |
| R949 | 7030003200 | S.RES ERJ3GEYJ 100 V (10) | T | 139.2/28.3 |
| R950 | 7030003200 | S.RES ERJ3GEYJ 100 V (10) | T | 139.7/37.7 |
| R951 | 7030003200 | S.RES ERJ3GEYJ 100 V (10) | T | 140.2/30.8 |
| R952 | 7030003200 | S.RES ERJ3GEYJ 100 V (10) | T | 140.7/40.3 |
| R953 | 7030003200 | S.RES ERJ3GEYJ 100 V (10) | T | 141.2/28.3 |
| R954 | 7030003200 | S.RES ERJ3GEYJ 100 V (10) | T | 141.7/37.7 |
| R955 | 7030003200 | S.RES ERJ3GEYJ 100 V (10) | T | 142.2/30.8 |
| R956 | 7030003200 | S.RES ERJ3GEYJ 100 V (10) | T | 142.7/40.3 |
| R957 | 7030003200 | S.RES ERJ3GEYJ 100 V (10) | T | 143.2/28.3 |
| R958 | 7030003200 | S.RES ERJ3GEYJ 100 V (10) | T | 143.7/37.7 |
| R959 | 7030003200 | S.RES ERJ3GEYJ 100 V (10) | T | 144.2/30.8 |
| R960 | 7030003200 | S.RES ERJ3GEYJ 100 V (10) | T | 144.7/40.3 |
| R961 | 7030003200 | S.RES ERJ3GEYJ 100 V (10) | T | 145.7/37.7 |
| R962 | 7030003200 | S.RES ERJ3GEYJ 100 V (10) | T | 146.2/30.8 |
| R963 | 7030003200 | S.RES ERJ3GEYJ 100 V (10) | T | 146.7/40.3 |
| R964 | 7030003200 | S.RES ERJ3GEYJ 100 V (10) | T | 147.2/28.3 |
| R965 | 7030003200 | S.RES ERJ3GEYJ 100 V (10) | T | 147.7/37.7 |
| R966 | 7030003200 | S.RES ERJ3GEYJ 100 V (10) | T | 148.2/30.8 |
| R967 | 7030003200 | S.RES ERJ3GEYJ 100 V (10) | T | 148.7/40.3 |
| R968 | 7030003200 | S.RES ERJ3GEYJ 100 V (10) | T | 149.7/37.7 |
| R969 | 7030003200 | S.RES ERJ3GEYJ 100 V (10) | T | 150.2/28.3 |
| R970 | 7030003200 | S.RES ERJ3GEYJ 100 V (10) | T | 150.7/40.3 |
| R971 | 7030003200 | S.RES ERJ3GEYJ 100 V (10) | T | 151.2/30.8 |
| R974 | 7030003200 | S.RES ERJ3GEYJ 100 V (10) | T | 153.2/30.8 |
| R975 | 7030003200 | S.RES ERJ3GEYJ 100 V (10) | B | 214.5/83.4 |
| R976 | 7030003200 | S.RES ERJ3GEYJ 100 V (10) | B | 220.6/83 |
| R977 | 7030003200 | S.RES ERJ3GEYJ 100 V (10) | B | 214.5/86 |
| R978 | 7030003200 | S.RES ERJ3GEYJ 100 V (10) | B | 220.6/87 |
| R979 | 7030003200 | S.RES ERJ3GEYJ 100 V (10) | B | 214.5/88 |
| R980 | 7030003200 | S.RES ERJ3GEYJ 100 V (10) | B | 220.6/89 |
| R981 | 7030003200 | S.RES ERJ3GEYJ 100 V (10) | B | 220.6/91 |
| R982 | 7030003200 | S.RES ERJ3GEYJ 100 V (10) | B | 220.6/93 |
| R983 | 7030003200 | S.RES ERJ3GEYJ 100 V (10) | B | 214.5/94 |
| R984 | 7030003200 | S.RES ERJ3GEYJ 100 V (10) | B | 12.2/115.7 |
| R985 | 7030003200 | S.RES ERJ3GEYJ 100 V (10) | B | 13.6/115.7 |
| R986 | 7030003200 | S.RES ERJ3GEYJ 100 V (10) | B | 14.9/115.7 |
| R987 | 7030003200 | S.RES ERJ3GEYJ 100 V (10) | B | 16.2/115.7 |
| R988 | 7030003200 | S.RES ERJ3GEYJ 100 V (10) | B | 17.5/115.7 |
| R989 | 7030003200 | S.RES ERJ3GEYJ 100 V (10) | T | 181.6/37.7 |
| R990 | 7030003440 | S.RES ERJ3GEYJ 102 V (1 k) | B | 182.5/92.1 |
| R991 | 7030003440 | S.RES ERJ3GEYJ 102 V (1 k) | B | 183.5/83.5 |
| R992 | 7030003440 | S.RES ERJ3GEYJ 102 V (1 k) | B | 184.5/92.1 |
| R993 | 7030003440 | S.RES ERJ3GEYJ 102 V (1 k) | B | 185.5/83.5 |
| R994 | 7030003440 | S.RES ERJ3GEYJ 102 V (1 k) | B | 186.5/92.1 |
| R995 | 7030003440 | S.RES ERJ3GEYJ 102 V (1 k) | B | 187.5/83.5 |
| R996 | 7030003200 | S.RES ERJ3GEYJ 100 V (10) | B | 220.6/95.6 |
| R998 | 7030003440 | S.RES ERJ3GEYJ 102 V (1 k) | B | 190.5/92.1 |
| R999 | 7030003440 | S.RES ERJ3GEYJ 102 V (1 k) | B | 191.5/83.5 |
| R1000 | 7030003440 | S.RES ERJ3GEYJ 102 V (1 k) | B | 192.5/92.1 |
| R1003 | 7030003200 | S.RES ERJ3GEYJ 100 V (10) | B | 231.3/83 |
| R1004 | 7030003200 | S.RES ERJ3GEYJ 100 V (10) | B | 225.9/82.7 |
| R1005 | 7030003200 | S.RES ERJ3GEYJ 100 V (10) | B | 231.3/81 |
| R1006 | 7030003200 | S.RES ERJ3GEYJ 100 V (10) | B | 222.7/80 |
| R1007 | 7030003200 | S.RES ERJ3GEYJ 100 V (10) | B | 231.3/79 |
| R1008 | 7030003200 | S.RES ERJ3GEYJ 100 V (10) | B | 222.7/48.5 |
| R1009 | 7030003200 | S.RES ERJ3GEYJ 100 V (10) | B | 231.3/49.5 |
| R1010 | 7030003200 | S.RES ERJ3GEYJ 100 V (10) | B | 222.7/52.5 |
| R1011 | 7030003200 | S.RES ERJ3GEYJ 100 V (10) | B | 231.3/53.5 |
| R1012 | 7030003200 | S.RES ERJ3GEYJ 100 V (10) | B | 222.7/56.5 |
| R1013 | 7030003200 | S.RES ERJ3GEYJ 100 V (10) | B | 231.3/57.5 |
| R1014 | 7030003200 | S.RES ERJ3GEYJ 100 V (10) | B | 222.7/58.5 |
| R1015 | 7030003200 | S.RES ERJ3GEYJ 100 V (10) | B | 231.3/59.5 |
| R1016 | 7030003200 | S.RES ERJ3GEYJ 100 V (10) | T | 181/22.1 |
| R1017 | 7030003200 | S.RES ERJ3GEYJ 100 V (10) | T | 179.7/22.1 |
| R1018 | 7030003200 | S.RES ERJ3GEYJ 100 V (10) | T | 176.7/22.1 |
| R1019 | 7030003200 | S.RES ERJ3GEYJ 100 V (10) | T | 174.7/22.2 |
| R1020 | 7030003200 | S.RES ERJ3GEYJ 100 V (10) | T | 173.4/22.2 |
| R1021 | 7030003200 | S.RES ERJ3GEYJ 100 V (10) | T | 172.1/22.2 |
| R1022 | 7030003200 | S.RES ERJ3GEYJ 100 V (10) | T | 170.8/22.2 |
| R1023 | 7030003200 | S.RES ERJ3GEYJ 100 V (10) | T | 169.5/22.2 |
| R1024 | 7030003200 | S.RES ERJ3GEYJ 100 V (10) | B | 220.7/85 |
| R1025 | 7030003320 | S.RES ERJ3GEYJ 101 V (100) | B | 120.5/9.7 |
| R1026 | 7030003320 | S.RES ERJ3GEYJ 101 V (100) | B | 108.9/8.1 |
| R1027 | 7030003320 | S.RES ERJ3GEYJ 101 V (100) | B | 137.3/17.2 |
| R1028 | 7030003320 | S.RES ERJ3GEYJ 101 V (100) | B | 135.6/7.2 |
| R1029 | 7030003520 | S.RES ERJ3GEYJ 472 V (4.7 k) | B | 120.5/11 |
| R1030 | 7030003520 | S.RES ERJ3GEYJ 472 V (4.7 k) | B | 120.5/7.1 |

## [LOGIC UNIT]

| REF NO. | ORDER NO. | DESCRIPTION | M. | H/V LOCATION |
|---|---|---|---|---|
| R1031 | 7030003520 | S.RES ERJ3GEYJ 472 V (4.7 k) | B | 108.9/12 |
| R1032 | 7030003520 | S.RES ERJ3GEYJ 472 V (4.7 k) | B | 108.9/9.4 |
| R1033 | 7030003860 | S.RES ERJ3GE JPW V | T | 188.9/62.5 |
| R1035 | 7030003540 | S.RES ERJ3GEYJ 682 V (6.8 k) | B | 192.2/60.1 |
| R1036 | 7030003540 | S.RES ERJ3GEYJ 682 V (6.8 k) | B | 184.5/64.7 |
| R1041 | 7030003520 | S.RES ERJ3GEYJ 472 V (4.7 k) | B | 173.8/28.2 |
| R1042 | 7030003550 | S.RES ERJ3GEYJ 822 V (8.2 k) | T | 115.2/16.6 |
| R1052 | 7030008240 | S.RES ERJ12Y0R00U | T | 86.1/114.3 |
| R1053 | 7030008240 | S.RES ERJ12Y0R00U | T | 67.5/114.4 |
| R1054 | 7030008240 | S.RES ERJ12Y0R00U | T | 9.4/116.7 |
| R1056 | 7030003860 | S.RES ERJ3GE JPW V | T | 138.7/40.3 |
| R1057 | 7030003860 | S.RES ERJ3GE JPW V | B | 123.1/7.1 |
| R1101 | 7030003280 | S.RES ERJ3GEYJ 470 V (47) | T | 18.7/30.5 |
| R1102 | 7030003280 | S.RES ERJ3GEYJ 470 V (47) | T | 18.7/33.1 |
| R1103 | 7030003280 | S.RES ERJ3GEYJ 470 V (47) | T | 18.7/35.7 |
| R1104 | 7030003280 | S.RES ERJ3GEYJ 470 V (47) | T | 20.5/30.5 |
| R1105 | 7030003280 | S.RES ERJ3GEYJ 470 V (47) | T | 20.5/33.1 |
| R1106 | 7030003280 | S.RES ERJ3GEYJ 470 V (47) | T | 20.5/35.7 |
| R1107 | 7030003280 | S.RES ERJ3GEYJ 470 V (47) | T | 22.3/30.5 |
| R1108 | 7030003280 | S.RES ERJ3GEYJ 470 V (47) | T | 22.3/33.1 |
| R1109 | 7030003280 | S.RES ERJ3GEYJ 470 V (47) | T | 22.3/35.7 |
| R1110 | 7030003280 | S.RES ERJ3GEYJ 470 V (47) | T | 24.1/27.9 |
| R1111 | 7030003280 | S.RES ERJ3GEYJ 470 V (47) | T | 24.1/30.5 |
| R1112 | 7030003280 | S.RES ERJ3GEYJ 470 V (47) | T | 24.1/33.1 |
| R1113 | 7030003280 | S.RES ERJ3GEYJ 470 V (47) | T | 25.9/27.9 |
| R1114 | 7030003280 | S.RES ERJ3GEYJ 470 V (47) | T | 25.9/30.5 |
| R1115 | 7030003280 | S.RES ERJ3GEYJ 470 V (47) | T | 25.9/33.1 |
| R1116 | 7030003280 | S.RES ERJ3GEYJ 470 V (47) | T | 27.3/30.5 |
| R1117 | 7030003280 | S.RES ERJ3GEYJ 470 V (47) | T | 28.6/30.5 |
| R1118 | 7030003280 | S.RES ERJ3GEYJ 470 V (47) | T | 29.9/30.5 |
| R1119 | 7030003280 | S.RES ERJ3GEYJ 470 V (47) | T | 31.2/30.5 |
| R1120 | 7030003280 | S.RES ERJ3GEYJ 470 V (47) | T | 32.5/30.5 |
| R1121 | 7030003280 | S.RES ERJ3GEYJ 470 V (47) | T | 33.8/30.5 |
| R1122 | 7030003280 | S.RES ERJ3GEYJ 470 V (47) | T | 35.1/30.5 |
| R1123 | 7030003280 | S.RES ERJ3GEYJ 470 V (47) | T | 40.5/29.6 |
| R1124 | 7030003280 | S.RES ERJ3GEYJ 470 V (47) | T | 42.8/34.8 |
| R1125 | 7030003280 | S.RES ERJ3GEYJ 470 V (47) | T | 43.5/32.2 |
| R1126 | 7030003280 | S.RES ERJ3GEYJ 470 V (47) | T | 44.2/34.8 |
| R1127 | 7030003280 | S.RES ERJ3GEYJ 470 V (47) | T | 44.9/32.2 |
| R1128 | 7030003280 | S.RES ERJ3GEYJ 470 V (47) | T | 45.6/34.8 |
| R1129 | 7030003280 | S.RES ERJ3GEYJ 470 V (47) | T | 46.3/32.2 |
| R1130 | 7030003280 | S.RES ERJ3GEYJ 470 V (47) | T | 47/34.8 |
| R1131 | 7030003280 | S.RES ERJ3GEYJ 470 V (47) | T | 47.7/32.2 |
| R1132 | 7030003280 | S.RES ERJ3GEYJ 470 V (47) | T | 48.4/34.8 |
| R1133 | 7030003280 | S.RES ERJ3GEYJ 470 V (47) | T | 49.1/32.2 |
| R1134 | 7030003280 | S.RES ERJ3GEYJ 470 V (47) | T | 49.8/34.8 |
| R1135 | 7030003280 | S.RES ERJ3GEYJ 470 V (47) | T | 50.5/32.2 |
| R1136 | 7030003280 | S.RES ERJ3GEYJ 470 V (47) | T | 51.2/34.8 |
| R1137 | 7030003280 | S.RES ERJ3GEYJ 470 V (47) | T | 51.9/32.2 |
| R1138 | 7030003280 | S.RES ERJ3GEYJ 470 V (47) | T | 52.6/34.8 |
| R1139 | 7030003280 | S.RES ERJ3GEYJ 470 V (47) | T | 53.3/32.2 |
| R1140 | 7030003280 | S.RES ERJ3GEYJ 470 V (47) | T | 54/34.8 |
| R1141 | 7030003280 | S.RES ERJ3GEYJ 470 V (47) | T | 54.7/32.2 |
| R1142 | 7030003280 | S.RES ERJ3GEYJ 470 V (47) | T | 55.4/34.8 |
| R1143 | 7030003280 | S.RES ERJ3GEYJ 470 V (47) | T | 56.1/32.2 |
| R1144 | 7030003280 | S.RES ERJ3GEYJ 470 V (47) | T | 56.8/34.8 |
| R1145 | 7030003280 | S.RES ERJ3GEYJ 470 V (47) | T | 57.5/32.2 |
| R1146 | 7030003280 | S.RES ERJ3GEYJ 470 V (47) | T | 58.2/34.8 |
| R1151 | 7030003290 | S.RES ERJ3GEYJ 560 V (56) | T | 205.2/11.7 |
| R1152 | 7030003320 | S.RES ERJ3GEYJ 101 V (100) | T | 203.6/11.7 |
| R1153 | 7030003320 | S.RES ERJ3GEYJ 101 V (100) | T | 200.8/13.2 |
| R1154 | 7030003320 | S.RES ERJ3GEYJ 101 V (100) | T | 199.5/13.2 |
| R1155 | 7030003320 | S.RES ERJ3GEYJ 101 V (100) | B | 201.4/10.8 |
| R1156 | 7030003320 | S.RES ERJ3GEYJ 101 V (100) | T | 198.2/13.2 |
| R1157 | 7030003320 | S.RES ERJ3GEYJ 101 V (100) | B | 200.1/10.8 |
| R1158 | 7030003320 | S.RES ERJ3GEYJ 101 V (100) | T | 196.9/13.2 |
| R1159 | 7030003320 | S.RES ERJ3GEYJ 101 V (100) | B | 198.8/10.8 |
| R1160 | 7030003320 | S.RES ERJ3GEYJ 101 V (100) | T | 195.6/13.2 |
| R1161 | 7030003320 | S.RES ERJ3GEYJ 101 V (100) | B | 197.5/10.8 |
| R1162 | 7030003320 | S.RES ERJ3GEYJ 101 V (100) | B | 196.2/10.8 |
| R1163 | 7030003320 | S.RES ERJ3GEYJ 101 V (100) | T | 194.3/13.2 |
| R1164 | 7030003320 | S.RES ERJ3GEYJ 101 V (100) | T | 193/13.2 |
| R1165 | 7030003320 | S.RES ERJ3GEYJ 101 V (100) | T | 191.1/14.9 |
| R1166 | 7030003320 | S.RES ERJ3GEYJ 101 V (100) | T | 189.8/14.9 |
| R1167 | 7030003320 | S.RES ERJ3GEYJ 101 V (100) | T | 188.5/14.9 |
| R1168 | 7030003320 | S.RES ERJ3GEYJ 101 V (100) | T | 187.2/14.9 |
| R1169 | 7030003320 | S.RES ERJ3GEYJ 101 V (100) | T | 185.9/14.9 |
| R1170 | 7030003320 | S.RES ERJ3GEYJ 101 V (100) | T | 181.4/9.5 |
| | | | | |
| C1 | 4030011600 | S.CER C1608 JB 1E 104K-T | B | 69.7/83.3 |
| C2 | 4030011600 | S.CER C1608 JB 1E 104K-T | B | 68.1/83.3 |
| C3 | 4030011600 | S.CER C1608 JB 1E 104K-T | B | 63.3/83.3 |
| C4 | 4030011600 | S.CER C1608 JB 1E 104K-T | B | 59.3/83.3 |
| C5 | 4030011600 | S.CER C1608 JB 1E 104K-T | B | 48.9/83.3 |
| C6 | 4030011600 | S.CER C1608 JB 1E 104K-T | B | 66.9/100.4 |
| C7 | 4030011600 | S.CER C1608 JB 1E 104K-T | B | 62.1/100.4 |
| C8 | 4030011600 | S.CER C1608 JB 1E 104K-T | T | 69.7/107.5 |
| C9 | 4030011600 | S.CER C1608 JB 1E 104K-T | T | 68.1/107.5 |
| C10 | 4030011600 | S.CER C1608 JB 1E 104K-T | T | 63.3/107.5 |
| C11 | 4030011600 | S.CER C1608 JB 1E 104K-T | T | 59.3/107.5 |
| C12 | 4030011600 | S.CER C1608 JB 1E 104K-T | T | 48.9/107.5 |
| C13 | 4030011600 | S.CER C1608 JB 1E 104K-T | T | 66.6/90.9 |
| C14 | 4030011600 | S.CER C1608 JB 1E 104K-T | T | 61.9/90.9 |
| C51 | 4030011600 | S.CER C1608 JB 1E 104K-T | B | 105.5/54.7 |
| C52 | 4030011600 | S.CER C1608 JB 1E 104K-T | B | 97.1/46.1 |
| C53 | 4030011600 | S.CER C1608 JB 1E 104K-T | B | 94.4/46.1 |
| C54 | 4030011600 | S.CER C1608 JB 1E 104K-T | B | 106.6/51 |
| C55 | 4030011600 | S.CER C1608 JB 1E 104K-T | B | 109/65.9 |
| C56 | 4030011600 | S.CER C1608 JB 1E 104K-T | B | 114/65.9 |
| C57 | 4030011600 | S.CER C1608 JB 1E 104K-T | B | 127.6/63.1 |
| C58 | 4030011600 | S.CER C1608 JB 1E 104K-T | B | 127.7/55.9 |
| C59 | 4030011600 | S.CER C1608 JB 1E 104K-T | B | 117.5/46.1 |
| C60 | 4030011600 | S.CER C1608 JB 1E 104K-T | B | 111.5/46.1 |

M.=Mounted side (T: Mounted on the Top side, B: Mounted on the Bottom side)
S.=Surface mount

## [LOGIC UNIT]

| REF NO. | ORDER NO. | DESCRIPTION | M. | H/V LOCATION |
|---|---|---|---|---|
| C61 | 4030009990 | S.CER C1608 CH 1H 200J-T | T | 143/78.1 |
| C62 | 4030011600 | S.CER C1608 JB 1E 104K-T | T | 139.9/100.6 |
| C63 | 4030008890 | S.CER C1608 JB 1H 273K-T | T | 144.5/100.6 |
| C64 | 4030011600 | S.CER C1608 JB 1E 104K-T | T | 146.7/102.5 |
| C65 | 4030011600 | S.CER C1608 JB 1E 104K-T | T | 96/34.2 |
| C66 | 4030011600 | S.CER C1608 JB 1E 104K-T | B | 34.1/27.4 |
| C101 | 4030011600 | S.CER C1608 JB 1E 104K-T | T | 23.3/71.9 |
| C102 | 4030011600 | S.CER C1608 JB 1E 104K-T | B | 43.2/48.2 |
| C103 | 4030011600 | S.CER C1608 JB 1E 104K-T | B | 47.1/78 |
| C104 | 4030011600 | S.CER C1608 JB 1E 104K-T | B | 46.8/58.8 |
| C105 | 4030011600 | S.CER C1608 JB 1E 104K-T | B | 49.5/71 |
| C106 | 4030011600 | S.CER C1608 JB 1E 104K-T | B | 46.8/57.5 |
| C107 | 4030011600 | S.CER C1608 JB 1E 104K-T | B | 52/57.5 |
| C108 | 4030011600 | S.CER C1608 JB 1E 104K-T | B | 57.7/57.5 |
| C109 | 4030011600 | S.CER C1608 JB 1E 104K-T | B | 59.6/60.8 |
| C110 | 4030011600 | S.CER C1608 JB 1E 104K-T | B | 46.8/68 |
| C111 | 4550007520 | S.TAN F931A106MAABMA | B | 57.7/48.8 |
| C112 | 4030011600 | S.CER C1608 JB 1E 104K-T | B | 59/50.5 |
| C113 | 4550007520 | S.TAN F931A106MAABMA | B | 63.6/48.8 |
| C114 | 4030011600 | S.CER C1608 JB 1E 104K-T | B | 62/50.5 |
| C115 | 4550007520 | S.TAN F931A106MAABMA | B | 68.8/48.8 |
| C116 | 4030011600 | S.CER C1608 JB 1E 104K-T | B | 64.9/50.5 |
| C117 | 4030011600 | S.CER C1608 JB 1E 104K-T | B | 46.9/71 |
| C118 | 4030011600 | S.CER C1608 JB 1E 104K-T | B | 46.8/61.4 |
| C119 | 4030011600 | S.CER C1608 JB 1E 104K-T | B | 46.8/69.3 |
| C120 | 4030011600 | S.CER C1608 JB 1E 104K-T | B | 59.6/69.4 |
| C121 | 4030011600 | S.CER C1608 JB 1E 104K-T | B | 57.8/70.2 |
| C122 | 4030011600 | S.CER C1608 JB 1E 104K-T | B | 56.5/70.2 |
| C123 | 4030006860 | S.CER C1608 JB 1H 102K-T | B | 57.3/78 |
| C124 | 4030011600 | S.CER C1608 JB 1E 104K-T | B | 52.1/71 |
| C125 | 4030011600 | S.CER C1608 JB 1E 104K-T | B | 54.7/71 |
| C126 | 4030011600 | S.CER C1608 JB 1E 104K-T | B | 46.8/66.7 |
| C127 | 4030011600 | S.CER C1608 JB 1E 104K-T | B | 43.2/50.8 |
| C128 | 4030011600 | S.CER C1608 JB 1E 104K-T | B | 52.2/50.8 |
| C129 | 4030011600 | S.CER C1608 JB 1E 104K-T | B | 46.1/64.8 |
| C130 | 4030011600 | S.CER C1608 JB 1E 104K-T | B | 59.6/66.8 |
| C131 | 4030011600 | S.CER C1608 JB 1E 104K-T | B | 66.4/68.7 |
| C132 | 4030011600 | S.CER C1608 JB 1E 104K-T | B | 59.6/63.6 |
| C133 | 4030011600 | S.CER C1608 JB 1E 104K-T | B | 47.1/50.9 |
| C134 | 4030011600 | S.CER C1608 JB 1E 104K-T | B | 39.3/58.6 |
| C135 | 4030011600 | S.CER C1608 JB 1E 104K-T | B | 46.8/60.1 |
| C136 | 4030011600 | S.CER C1608 JB 1E 104K-T | B | 54.6/57.5 |
| C137 | 4030011600 | S.CER C1608 JB 1E 104K-T | B | 49.4/57.5 |
| C138 | 4030011600 | S.CER C1608 JB 1E 104K-T | B | 54.7/69.3 |
| C139 | 4030011600 | S.CER C1608 JB 1E 104K-T | B | 59.6/58.2 |
| C140 | 4030006900 | S.CER C1608 JB 1H 103K-T | B | 66.4/58.5 |
| C141 | 4030011600 | S.CER C1608 JB 1E 104K-T | T | 64.3/38.6 |
| C142 | 4030011600 | S.CER C1608 JB 1E 104K-T | T | 76.8/32.5 |
| C144 | 4030011600 | S.CER C1608 JB 1E 104K-T | T | 7.9/62.8 |
| C145 | 4030011600 | S.CER C1608 JB 1E 104K-T | T | 10/62.1 |
| C146 | 4030007020 | S.CER C1608 CH 1H 120J-T | T | 8.1/58.8 |
| C147 | 4030007020 | S.CER C1608 CH 1H 120J-T | T | 10/59.5 |
| C148 | 4030011600 | S.CER C1608 JB 1E 104K-T | T | 6.7/70.5 |
| C149 | 4030011600 | S.CER C1608 JB 1E 104K-T | T | 7.4/73.7 |
| C201 | 4030011600 | S.CER C1608 JB 1E 104K-T | B | 118.1/103.3 |
| C202 | 4030011600 | S.CER C1608 JB 1E 104K-T | B | 120.7/103.3 |
| C203 | 4030011600 | S.CER C1608 JB 1E 104K-T | B | 124.2/103.3 |
| C204 | 4030011600 | S.CER C1608 JB 1E 104K-T | B | 127.3/103.3 |
| C205 | 4030011600 | S.CER C1608 JB 1E 104K-T | B | 137.4/103.5 |
| C206 | 4030011600 | S.CER C1608 JB 1E 104K-T | B | 120.7/87.6 |
| C207 | 4030011600 | S.CER C1608 JB 1E 104K-T | B | 125.5/87.7 |
| C208 | 4030011600 | S.CER C1608 JB 1E 104K-T | B | 117.7/85.8 |
| C209 | 4030011600 | S.CER C1608 JB 1E 104K-T | B | 119.2/85.8 |
| C210 | 4030011600 | S.CER C1608 JB 1E 104K-T | B | 124/85.8 |
| C211 | 4030011600 | S.CER C1608 JB 1E 104K-T | B | 128/85.8 |
| C212 | 4030011600 | S.CER C1608 JB 1E 104K-T | B | 138.4/85.8 |
| C213 | 4030011600 | S.CER C1608 JB 1E 104K-T | B | 120.7/70 |
| C214 | 4030011600 | S.CER C1608 JB 1E 104K-T | B | 124.1/70 |
| C215 | 4030011600 | S.CER C1608 JB 1E 104K-T | B | 89.4/90.4 |
| C216 | 4030011600 | S.CER C1608 JB 1E 104K-T | B | 85.6/71.6 |
| C217 | 4030011600 | S.CER C1608 JB 1E 104K-T | B | 91.5/79.6 |
| C218 | 4030011600 | S.CER C1608 JB 1E 104K-T | B | 92.1/72.6 |
| C219 | 4030011600 | S.CER C1608 JB 1E 104K-T | B | 94.7/72.6 |
| C220 | 4030011600 | S.CER C1608 JB 1E 104K-T | B | 90.8/72.6 |
| C221 | 4030011600 | S.CER C1608 JB 1E 104K-T | B | 96.6/66.6 |
| C222 | 4030011600 | S.CER C1608 JB 1E 104K-T | B | 94.4/89.4 |
| C223 | 4030011600 | S.CER C1608 JB 1E 104K-T | B | 90.8/83.4 |
| C224 | 4030011600 | S.CER C1608 JB 1E 104K-T | B | 85.6/83.7 |
| C225 | 4030011600 | S.CER C1608 JB 1E 104K-T | B | 91.5/77 |
| C226 | 4030011600 | S.CER C1608 JB 1E 104K-T | B | 91.5/75.7 |
| C227 | 4030011600 | S.CER C1608 JB 1E 104K-T | B | 96.7/72.6 |
| C228 | 4030011600 | S.CER C1608 JB 1E 104K-T | B | 91.5/74.4 |
| C229 | 4030011600 | S.CER C1608 JB 1E 104K-T | B | 100.6/89.4 |
| C230 | 4030011600 | S.CER C1608 JB 1E 104K-T | B | 97.3/83.2 |
| C231 | 4030011600 | S.CER C1608 JB 1E 104K-T | B | 102.5/83.6 |
| C232 | 4030011600 | S.CER C1608 JB 1E 104K-T | B | 91.5/80.9 |
| C233 | 4030011600 | S.CER C1608 JB 1E 104K-T | B | 102.5/77.1 |
| C234 | 4030011600 | S.CER C1608 JB 1E 104K-T | B | 99.3/72.6 |
| C235 | 4030011600 | S.CER C1608 JB 1E 104K-T | B | 102.2/66.4 |
| C236 | 4030011600 | S.CER C1608 JB 1E 104K-T | B | 102.5/82.3 |
| C237 | 4030011600 | S.CER C1608 JB 1E 104K-T | B | 102.5/81 |
| C238 | 4030011600 | S.CER C1608 JB 1E 104K-T | B | 102.5/79.7 |
| C239 | 4030011600 | S.CER C1608 JB 1E 104K-T | B | 85.6/81.1 |
| C240 | 4030011600 | S.CER C1608 JB 1E 104K-T | B | 102.5/75.8 |
| C241 | 4030011600 | S.CER C1608 JB 1E 104K-T | B | 102.5/74.5 |
| C242 | 4030011600 | S.CER C1608 JB 1E 104K-T | B | 103.2/72.6 |
| C243 | 4030011600 | S.CER C1608 JB 1E 104K-T | B | 101.9/72.6 |
| C244 | 4030011600 | S.CER C1608 JB 1E 104K-T | B | 91.5/78.3 |
| C245 | 4030011600 | S.CER C1608 JB 1E 104K-T | B | 92.1/83.2 |
| C246 | 4030011600 | S.CER C1608 JB 1E 104K-T | B | 102.5/78.4 |
| C247 | 4030011600 | S.CER C1608 JB 1E 104K-T | B | 99.3/83.2 |
| C248 | 4030011600 | S.CER C1608 JB 1E 104K-T | B | 100.6/72.6 |
| C249 | 4030011600 | S.CER C1608 JB 1E 104K-T | B | 93.4/72.6 |
| C250 | 4030007050 | S.CER C1608 CH 1H 220J-T | T | 101/91.3 |

## [LOGIC UNIT]

| REF NO. | ORDER NO. | DESCRIPTION | M. | H/V LOCATION |
|---|---|---|---|---|
| C251 | 4030007050 | S.CER C1608 CH 1H 220J-T | T | 98.4/91.3 |
| C252 | 4030006990 | S.CER C1608 CH 1H 080D-T | T | 98.9/63.9 |
| C253 | 4030006990 | S.CER C1608 CH 1H 080D-T | T | 101.5/63.9 |
| C254 | 4030006900 | S.CER C1608 JB 1H 103K-T | T | 83.7/84.6 |
| C255 | 4510008520 | S.ELE EEE1CA470SP | T | 101.3/100.8 |
| C256 | 4030006900 | S.CER C1608 JB 1H 103K-T | T | 83/64.1 |
| C257 | 4510007130 | S.ELE EEFCD 0J 470R | T | 78.5/66.3 |
| C258 | 4030011600 | S.CER C1608 JB 1E 104K-T | T | 84.9/61 |
| C259 | 4030011600 | S.CER C1608 JB 1E 104K-T | B | 85.6/76.9 |
| C260 | 4030011600 | S.CER C1608 JB 1E 104K-T | T | 214.2/33 |
| C261 | 4030011600 | S.CER C1608 JB 1E 104K-T | T | 214.2/31.7 |
| C262 | 4030011600 | S.CER C1608 JB 1E 104K-T | T | 214.2/29.7 |
| C263 | 4030011600 | S.CER C1608 JB 1E 104K-T | T | 214.2/28.4 |
| C264 | 4030011600 | S.CER C1608 JB 1E 104K-T | T | 205.4/23.2 |
| C265 | 4510008540 | S.ELE EEE1CA100SR | T | 214.2/36.7 |
| C266 | 4030011600 | S.CER C1608 JB 1E 104K-T | T | 196.3/28.7 |
| C267 | 4030007100 | S.CER C1608 CH 1H 560J-T | B | 219.4/32.5 |
| C268 | 4030007100 | S.CER C1608 CH 1H 560J-T | B | 219.4/29.5 |
| C269 | 4030007100 | S.CER C1608 CH 1H 560J-T | B | 219.4/26.5 |
| C270 | 4030007050 | S.CER C1608 CH 1H 220J-T | B | 225/32.5 |
| C271 | 4030007050 | S.CER C1608 CH 1H 220J-T | B | 225/29.5 |
| C272 | 4030007050 | S.CER C1608 CH 1H 220J-T | B | 225/26.5 |
| C273 | 4030011600 | S.CER C1608 JB 1E 104K-T | T | 194.2/16.5 |
| C274 | 4030007170 | S.CER C1608 CH 1H 221J-T | T | 203.9/16.5 |
| C275 | 4030007170 | S.CER C1608 CH 1H 221J-T | T | 203.9/19.4 |
| C276 | 4030007050 | S.CER C1608 CH 1H 220J-T | B | 217.8/9.3 |
| C277 | 4030007050 | S.CER C1608 CH 1H 220J-T | B | 220.7/9.3 |
| C278 | 4510008500 | S.ELE EEE1CA101WP | T | 223.4/38.4 |
| C279 | 4030007050 | S.CER C1608 CH 1H 220J-T | B | 227.8/9.3 |
| C280 | 4030007050 | S.CER C1608 CH 1H 220J-T | B | 230.7/9.3 |
| C281 | 4510008500 | S.ELE EEE1CA101WP | T | 223.4/30.6 |
| C282 | 4030011600 | S.CER C1608 JB 1E 104K-T | B | 215.6/39.1 |
| C283 | 4510008550 | S.ELE EEE1HA010SR | T | 217.2/42 |
| C284 | 4030011600 | S.CER C1608 JB 1E 104K-T | B | 104.6/21.2 |
| C285 | 4510008540 | S.ELE EEE1CA100SR | T | 105.6/37.4 |
| C286 | 4510008540 | S.ELE EEE1CA100SR | T | 105.6/32.6 |
| C287 | 4030011600 | S.CER C1608 JB 1E 104K-T | B | 104.6/23.2 |
| C288 | 4510008540 | S.ELE EEE1CA100SR | T | 105.6/27.8 |
| C289 | 4030011600 | S.CER C1608 JB 1E 104K-T | B | 104.6/24.5 |
| C290 | 4030011600 | S.CER C1608 JB 1E 104K-T | B | 115.5/21.2 |
| C291 | 4510008540 | S.ELE EEE1CA100SR | T | 111.7/37.4 |
| C292 | 4510008540 | S.ELE EEE1CA100SR | T | 111.7/32.6 |
| C293 | 4030011600 | S.CER C1608 JB 1E 104K-T | B | 115.5/23.2 |
| C294 | 4510008540 | S.ELE EEE1CA100SR | T | 111.7/27.8 |
| C295 | 4030011600 | S.CER C1608 JB 1E 104K-T | B | 115.5/24.5 |
| C296 | 4030011600 | S.CER C1608 JB 1E 104K-T | B | 126.3/33.9 |
| C297 | 4510008540 | S.ELE EEE1CA100SR | T | 123.9/39.8 |
| C298 | 4030011600 | S.CER C1608 JB 1E 104K-T | B | 126.3/31.3 |
| C299 | 4510008540 | S.ELE EEE1CA100SR | T | 123.9/35 |
| C300 | 4030011600 | S.CER C1608 JB 1E 104K-T | B | 114/34.6 |
| C301 | 4510008540 | S.ELE EEE1CA100SR | T | 117.8/39.8 |
| C302 | 4030011600 | S.CER C1608 JB 1E 104K-T | B | 113.3/32.5 |
| C303 | 4510008540 | S.ELE EEE1CA100SR | T | 117.8/35 |
| C401 | 4030011600 | S.CER C1608 JB 1E 104K-T | B | 28.2/61.5 |
| C402 | 4030011600 | S.CER C1608 JB 1E 104K-T | B | 22.3/61.5 |
| C403 | 4030011600 | S.CER C1608 JB 1E 104K-T | B | 8.7/53.3 |
| C404 | 4030011600 | S.CER C1608 JB 1E 104K-T | B | 8.7/45.6 |
| C405 | 4030011600 | S.CER C1608 JB 1E 104K-T | B | 20.2/35.6 |
| C406 | 4030011600 | S.CER C1608 JB 1E 104K-T | B | 25.4/35.6 |
| C407 | 4030011600 | S.CER C1608 JB 1E 104K-T | B | 29.7/35.6 |
| C408 | 4030011600 | S.CER C1608 JB 1E 104K-T | B | 38.5/42.3 |
| C409 | 4030011600 | S.CER C1608 JB 1E 104K-T | B | 38.7/47.5 |
| C410 | 4030011600 | S.CER C1608 JB 1E 104K-T | B | 38.7/51 |
| C411 | 4030011600 | S.CER C1608 JB 1E 104K-T | B | 40.9/36.2 |
| C412 | 4030006860 | S.CER C1608 JB 1H 102K-T | T | 29.3/44.7 |
| C413 | 4030006900 | S.CER C1608 JB 1H 103K-T | T | 26.7/44.7 |
| C414 | 4030007150 | S.CER C1608 CH 1H 151J-T | T | 28/44.7 |
| C415 | 4030011600 | S.CER C1608 JB 1E 104K-T | B | 15.2/30.5 |
| C416 | 4510008540 | S.ELE EEE1CA100SR | T | 13.7/28.8 |
| C417 | 4030011600 | S.CER C1608 JB 1E 104K-T | B | 15.2/31.8 |
| C418 | 4510008540 | S.ELE EEE1CA100SR | T | 13.7/33.6 |
| C419 | 4030006900 | S.CER C1608 JB 1H 103K-T | T | 36.9/26.6 |
| C420 | 4030007150 | S.CER C1608 CH 1H 151J-T | T | 36.9/25.3 |
| C421 | 4550007520 | S.TAN F931A106MAABMA | B | 19.7/26.8 |
| C422 | 4030011600 | S.CER C1608 JB 1E 104K-T | T | 20.8/66.3 |
| C423 | 4030011600 | S.CER C1608 JB 1E 104K-T | B | 35.3/85.1 |
| C424 | 4030011600 | S.CER C1608 JB 1E 104K-T | B | 38.1/77.1 |
| C425 | 4030011600 | S.CER C1608 JB 1E 104K-T | B | 34.6/71.4 |
| C426 | 4030011600 | S.CER C1608 JB 1E 104K-T | B | 34.8/67.7 |
| C427 | 4030011600 | S.CER C1608 JB 1E 104K-T | B | 26.8/62.8 |
| C428 | 4030011600 | S.CER C1608 JB 1E 104K-T | B | 20.8/62.8 |
| C429 | 4030011600 | S.CER C1608 JB 1E 104K-T | B | 18.2/62.8 |
| C430 | 4030011600 | S.CER C1608 JB 1E 104K-T | B | 9.7/81.5 |
| C431 | 4030011600 | S.CER C1608 JB 1E 104K-T | B | 12.3/72.4 |
| C432 | 4030011600 | S.CER C1608 JB 1E 104K-T | B | 12.3/79 |
| C433 | 4030011600 | S.CER C1608 JB 1E 104K-T | B | 12.3/82.2 |
| C434 | 4030011600 | S.CER C1608 JB 1E 104K-T | B | 17.2/90.2 |
| C435 | 4030011600 | S.CER C1608 JB 1E 104K-T | B | 20.8/90.2 |
| C436 | 4030011600 | S.CER C1608 JB 1E 104K-T | B | 25.7/90.2 |
| C437 | 4030011600 | S.CER C1608 JB 1E 104K-T | B | 146.1/21.2 |
| C438 | 4030011600 | S.CER C1608 JB 1E 104K-T | B | 152.6/21.2 |
| C439 | 4030011600 | S.CER C1608 JB 1E 104K-T | B | 153/18.4 |
| C440 | 4010008500 | CER DEBB33D102KA2B | | |
| C601 | 4030011600 | S.CER C1608 JB 1E 104K-T | B | 169.4/51.4 |
| C602 | 4030011600 | S.CER C1608 JB 1E 104K-T | B | 169.1/57.7 |
| C603 | 4030011600 | S.CER C1608 JB 1E 104K-T | B | 79.6/44.7 |
| C604 | 4030011600 | S.CER C1608 JB 1E 104K-T | B | 99.9/36.7 |
| C605 | 4030011600 | S.CER C1608 JB 1E 104K-T | B | 102/21.3 |
| C606 | 4030011600 | S.CER C1608 JB 1E 104K-T | B | 83.2/16.8 |
| C607 | 4030011600 | S.CER C1608 JB 1E 104K-T | B | 81.5/16.8 |
| C608 | 4510008540 | S.ELE EEE1CA100SR | T | 67/16.3 |
| C609 | 4510008540 | S.ELE EEE1CA100SR | T | 62.4/34 |
| C610 | 4030006900 | S.CER C1608 JB 1H 103K-T | B | 71.2/19.5 |
| C611 | 4030006900 | S.CER C1608 JB 1H 103K-T | B | 71.2/20.8 |

M.=Mounted side (T: Mounted on the Top side, B: Mounted on the Bottom side)
S.=Surface mount

## [LOGIC UNIT]

| REF NO. | ORDER NO. | DESCRIPTION | M. | H/V LOCATION |
|---|---|---|---|---|
| C612 | 4030007010 | S.CER C1608 CH 1H 100D-T | T | 80.9/16.9 |
| C613 | 4030007010 | S.CER C1608 CH 1H 100D-T | T | 83.5/16.9 |
| C614 | 4030011600 | S.CER C1608 JB 1E 104K-T | B | 86.2/14.2 |
| C615 | 4030006880 | S.CER C1608 JB 1H 472K-T | B | 71.2/31.2 |
| C616 | 4030006880 | S.CER C1608 JB 1H 472K-T | B | 71.2/29.9 |
| C617 | 4030006880 | S.CER C1608 JB 1H 472K-T | B | 71.2/28.6 |
| C618 | 4030006880 | S.CER C1608 JB 1H 472K-T | B | 71.2/27.3 |
| C619 | 4030006880 | S.CER C1608 JB 1H 472K-T | B | 71.2/26 |
| C620 | 4030006880 | S.CER C1608 JB 1H 472K-T | B | 71.2/24.7 |
| C621 | 4030006880 | S.CER C1608 JB 1H 472K-T | B | 71.2/23.4 |
| C622 | 4030006880 | S.CER C1608 JB 1H 472K-T | B | 71.2/22.1 |
| C623 | 4510008540 | S.ELE EEE1CA100SR | T | 178.6/62.5 |
| C624 | 4030011600 | S.CER C1608 JB 1E 104K-T | T | 174.9/60.6 |
| C625 | 4510008540 | S.ELE EEE1CA100SR | T | 184.7/62.5 |
| C626 | 4030011600 | S.CER C1608 JB 1E 104K-T | B | 63.7/20.3 |
| C627 | 4030011600 | S.CER C1608 JB 1E 104K-T | B | 60/20.3 |
| C628 | 4030011600 | S.CER C1608 JB 1E 104K-T | B | 73.6/39 |
| C629 | 4030011600 | S.CER C1608 JB 1E 104K-T | B | 57.2/39.8 |
| C630 | 4030011600 | S.CER C1608 JB 1E 104K-T | B | 150.9/51.7 |
| C631 | 4030011600 | S.CER C1608 JB 1E 104K-T | B | 148.9/48.1 |
| C632 | 4030011600 | S.CER C1608 JB 1E 104K-T | B | 131.8/66 |
| C633 | 4030011600 | S.CER C1608 JB 1E 104K-T | B | 138.2/66.7 |
| C634 | 4030011600 | S.CER C1608 JB 1E 104K-T | B | 150.9/58 |
| C635 | 4030011600 | S.CER C1608 JB 1E 104K-T | B | 131.1/58.5 |
| C636 | 4030011600 | S.CER C1608 JB 1E 104K-T | B | 131.1/52.1 |
| C801 | 4510008540 | S.ELE EEE1CA100SR | T | 141/114.6 |
| C802 | 4030011600 | S.CER C1608 JB 1E 104K-T | B | 138.5/110.6 |
| C803 | 4030011600 | S.CER C1608 JB 1E 104K-T | B | 138.5/113.3 |
| C804 | 4510008520 | S.ELE EEE1CA470SP | T | 147.2/113.8 |
| C805 | 4510008870 | S.ELE EEE1AA471UP | T | 100.2/110.4 |
| C806 | 4510008870 | S.ELE EEE1AA471UP | T | 109.5/110.4 |
| C807 | 4510008870 | S.ELE EEE1AA471UP | T | 119.4/100.6 |
| C808 | 4510008870 | S.ELE EEE1AA471UP | T | 119.9/109.6 |
| C809 | 4510008560 | S.ELE EEE1HAR47SR | T | 160/65.3 |
| C810 | 4510008560 | S.ELE EEE1HAR47SR | T | 166.6/65.3 |
| C811 | 4510008560 | S.ELE EEE1HAR47SR | T | 173.2/65.3 |
| C812 | 4030006860 | S.CER C1608 JB 1H 102K-T | B | 66.8/117.7 |
| C813 | 4030006860 | S.CER C1608 JB 1H 102K-T | B | 84.9/122.3 |
| C814 | 4030006860 | S.CER C1608 JB 1H 102K-T | B | 83.6/116.9 |
| C815 | 4030006860 | S.CER C1608 JB 1H 102K-T | T | 88.8/115.9 |
| C816 | 4030006860 | S.CER C1608 JB 1H 102K-T | B | 97.3/121.4 |
| C817 | 4030006860 | S.CER C1608 JB 1H 102K-T | B | 100.6/122.1 |
| C818 | 4030006860 | S.CER C1608 JB 1H 102K-T | B | 103.1/122.1 |
| C819 | 4030006860 | S.CER C1608 JB 1H 102K-T | B | 105.6/122.1 |
| C820 | 4030006860 | S.CER C1608 JB 1H 102K-T | B | 108.8/121.4 |
| C821 | 4510008520 | S.ELE EEE1CA470SP | T | 211/16 |
| C822 | 4510008500 | S.ELE EEE1CA101WP | T | 14.3/109.4 |
| C823 | 4030006880 | S.CER C1608 JB 1H 472K-T | B | 33.9/114.5 |
| C824 | 4030006860 | S.CER C1608 JB 1H 102K-T | T | 20/24.5 |
| C825 | 4030011600 | S.CER C1608 JB 1E 104K-T | B | 20.4/107.6 |
| C826 | 4030006860 | S.CER C1608 JB 1H 102K-T | T | 122.2/118.1 |
| C827 | 4030006860 | S.CER C1608 JB 1H 102K-T | T | 117.6/118.7 |
| C828 | 4030007130 | S.CER C1608 CH 1H 101J-T | T | 118.9/118.7 |
| C829 | 4030006860 | S.CER C1608 JB 1H 102K-T | T | 127.2/116 |
| C830 | 4030007130 | S.CER C1608 CH 1H 101J-T | T | 128.5/116 |
| C831 | 4030006860 | S.CER C1608 JB 1H 102K-T | T | 130.5/115.5 |
| C832 | 4030007130 | S.CER C1608 CH 1H 101J-T | T | 130.5/116.8 |
| C833 | 4030006860 | S.CER C1608 JB 1H 102K-T | T | 133.9/116 |
| C834 | 4030007130 | S.CER C1608 CH 1H 101J-T | T | 132.6/116 |
| C835 | 4030011600 | S.CER C1608 JB 1E 104K-T | T | 127.8/110.6 |
| C836 | 4510008540 | S.ELE EEE1CA100SR | T | 127.8/106 |
| C837 | 4030011600 | S.CER C1608 JB 1E 104K-T | T | 135.7/106.8 |
| C838 | 4510008540 | S.ELE EEE1CA100SR | T | 132.6/106 |
| C850 | 4030011600 | S.CER C1608 JB 1E 104K-T | B | 165/40.9 |
| C851 | 4510008540 | S.ELE EEE1CA100SR | T | 128/31.2 |
| C852 | 4030009490 | S.CER C1608 JB 1H 821K-T | B | 142.1/11.6 |
| C853 | 4030009490 | S.CER C1608 JB 1H 821K-T | B | 142.7/14.9 |
| C855 | 4510008540 | S.ELE EEE1CA100SR | T | 117.7/29.1 |
| C856 | 4030009490 | S.CER C1608 JB 1H 821K-T | B | 134.5/17.2 |
| C857 | 4030009490 | S.CER C1608 JB 1H 821K-T | B | 131.7/19.8 |
| C859 | 4510008540 | S.ELE EEE1CA100SR | T | 123.2/29.1 |
| C860 | 4030009490 | S.CER C1608 JB 1H 821K-T | B | 136.9/7.2 |
| C861 | 4030009490 | S.CER C1608 JB 1H 821K-T | B | 140.8/7.2 |
| C865 | 4510008540 | S.ELE EEE1CA100SR | T | 119.4/22.2 |
| C866 | 4030007160 | S.CER C1608 CH 1H 181J-T | B | 121/5 |
| C867 | 4030009880 | S.CER C1608 JB 1H 682K-T | T | 115.2/17.9 |
| C868 | 4030008880 | S.CER C1608 JB 1H 223K-T | T | 115.2/15.3 |
| C869 | 4510008540 | S.ELE EEE1CA100SR | T | 109.4/16.3 |
| C871 | 4510008540 | S.ELE EEE1CA100SR | T | 104.6/16.2 |
| C873 | 4030011600 | S.CER C1608 JB 1E 104K-T | B | 120.5/8.4 |
| C874 | 4030011600 | S.CER C1608 JB 1E 104K-T | B | 108.9/10.7 |
| C875 | 4510008540 | S.ELE EEE1CA100SR | T | 114.6/22.2 |
| C876 | 4510008540 | S.ELE EEE1CA100SR | T | 119/16.3 |
| C877 | 4030011600 | S.CER C1608 JB 1E 104K-T | B | 137.3/18.5 |
| C878 | 4030011600 | S.CER C1608 JB 1E 104K-T | B | 134.3/7.2 |
| C879 | 4510008540 | S.ELE EEE1CA100SR | T | 124.2/22.2 |
| C880 | 4510008540 | S.ELE EEE1CA100SR | T | 124.2/16.3 |
| C883 | 4510008560 | S.ELE EEE1HAR47SR | T | 184.7/67.3 |
| C884 | 4510008560 | S.ELE EEE1HAR47SR | T | 180.1/71.1 |
| C901 | 4510008540 | S.ELE EEE1CA100SR | T | 183.7/50.9 |
| C902 | 4510008540 | S.ELE EEE1CA100SR | T | 188.9/50.9 |
| C903 | 4030011600 | S.CER C1608 JB 1E 104K-T | B | 186.3/50.2 |
| C904 | 4030011600 | S.CER C1608 JB 1E 104K-T | B | 193.7/57.5 |
| C905 | 4510008540 | S.ELE EEE1CA100SR | T | 188.9/57 |
| C906 | 4510008540 | S.ELE EEE1CA100SR | T | 183.7/57 |
| C907 | 4030006860 | S.CER C1608 JB 1H 102K-T | B | 170.6/40.3 |
| C908 | 4030006860 | S.CER C1608 JB 1H 102K-T | B | 171.6/37.7 |
| C909 | 4030006860 | S.CER C1608 JB 1H 102K-T | B | 173.6/37.7 |
| C910 | 4030006860 | S.CER C1608 JB 1H 102K-T | B | 175.1/28.2 |
| C911 | 4030006860 | S.CER C1608 JB 1H 102K-T | B | 176.1/30.8 |
| C912 | 4030006860 | S.CER C1608 JB 1H 102K-T | B | 177.6/37.7 |
| C913 | 4030006860 | S.CER C1608 JB 1H 102K-T | B | 178.6/40.3 |
| C914 | 4030006860 | S.CER C1608 JB 1H 102K-T | B | 179.6/37.7 |
| C915 | 4030006860 | S.CER C1608 JB 1H 102K-T | B | 180.1/30.8 |

## [LOGIC UNIT]

| REF NO. | ORDER NO. | DESCRIPTION | M. | H/V LOCATION |
|---|---|---|---|---|
| C916 | 4030006860 | S.CER C1608 JB 1H 102K-T | B | 180.6/40.3 |
| C917 | 4030006860 | S.CER C1608 JB 1H 102K-T | B | 181.1/28.2 |
| C918 | 4030006860 | S.CER C1608 JB 1H 102K-T | B | 182.1/30.8 |
| C919 | 4030006860 | S.CER C1608 JB 1H 102K-T | B | 182.6/40.3 |
| C920 | 4030006860 | S.CER C1608 JB 1H 102K-T | B | 183.1/28.2 |
| C921 | 4030006860 | S.CER C1608 JB 1H 102K-T | B | 183.6/37.7 |
| C922 | 4030006860 | S.CER C1608 JB 1H 102K-T | B | 184.1/30.8 |
| C923 | 4030006860 | S.CER C1608 JB 1H 102K-T | B | 133.7/37.7 |
| C924 | 4030006860 | S.CER C1608 JB 1H 102K-T | B | 134.7/40.3 |
| C925 | 4030006860 | S.CER C1608 JB 1H 102K-T | B | 135.7/37.7 |
| C926 | 4030006860 | S.CER C1608 JB 1H 102K-T | B | 136.2/30.8 |
| C927 | 4030006860 | S.CER C1608 JB 1H 102K-T | B | 136.7/40.3 |
| C928 | 4030006860 | S.CER C1608 JB 1H 102K-T | B | 137.2/25.5 |
| C929 | 4030006860 | S.CER C1608 JB 1H 102K-T | B | 137.7/37.7 |
| C930 | 4030006860 | S.CER C1608 JB 1H 102K-T | B | 138.2/28.1 |
| C931 | 4030006860 | S.CER C1608 JB 1H 102K-T | B | 138.7/40.3 |
| C932 | 4030006860 | S.CER C1608 JB 1H 102K-T | B | 139.2/25.5 |
| C933 | 4030006860 | S.CER C1608 JB 1H 102K-T | B | 139.7/37.7 |
| C934 | 4030006860 | S.CER C1608 JB 1H 102K-T | B | 140.2/28.1 |
| C935 | 4030006860 | S.CER C1608 JB 1H 102K-T | B | 140.7/40.3 |
| C936 | 4030006860 | S.CER C1608 JB 1H 102K-T | B | 141.2/25.5 |
| C937 | 4030006860 | S.CER C1608 JB 1H 102K-T | B | 141.7/37.7 |
| C938 | 4030006860 | S.CER C1608 JB 1H 102K-T | B | 142.2/22.9 |
| C939 | 4030006860 | S.CER C1608 JB 1H 102K-T | B | 142.7/40.3 |
| C940 | 4030006860 | S.CER C1608 JB 1H 102K-T | B | 143.2/25.5 |
| C941 | 4030006860 | S.CER C1608 JB 1H 102K-T | B | 144.2/22.9 |
| C942 | 4030006860 | S.CER C1608 JB 1H 102K-T | B | 146.2/30.8 |
| C943 | 4030006860 | S.CER C1608 JB 1H 102K-T | B | 147.2/28.3 |
| C944 | 4030006860 | S.CER C1608 JB 1H 102K-T | B | 148.2/30.9 |
| C945 | 4030006860 | S.CER C1608 JB 1H 102K-T | B | 150.2/28.3 |
| C946 | 4030006860 | S.CER C1608 JB 1H 102K-T | B | 151.2/30.9 |
| C947 | 4030006860 | S.CER C1608 JB 1H 102K-T | B | 214.5/84.7 |
| C948 | 4030006860 | S.CER C1608 JB 1H 102K-T | B | 220.6/81.7 |
| C949 | 4030006860 | S.CER C1608 JB 1H 102K-T | B | 223/91.7 |
| C950 | 4030006860 | S.CER C1608 JB 1H 102K-T | B | 220.6/94.3 |
| C951 | 4030006860 | S.CER C1608 JB 1H 102K-T | B | 214.5/92.7 |
| C952 | 4030006860 | S.CER C1608 JB 1H 102K-T | B | 213.6/72.3 |
| C953 | 4030006860 | S.CER C1608 JB 1H 102K-T | B | 211.5/76.1 |
| C954 | 4030006860 | S.CER C1608 JB 1H 102K-T | B | 205.7/77.8 |
| C955 | 4030006860 | S.CER C1608 JB 1H 102K-T | B | 211.5/79.5 |
| C956 | 4030006860 | S.CER C1608 JB 1H 102K-T | T | 21/113.9 |
| C957 | 4030006860 | S.CER C1608 JB 1H 102K-T | T | 24/113.9 |
| C958 | 4030006860 | S.CER C1608 JB 1H 102K-T | T | 27/113.9 |
| C959 | 4030006860 | S.CER C1608 JB 1H 102K-T | T | 30/113.8 |
| C960 | 4030006860 | S.CER C1608 JB 1H 102K-T | B | 180.6/79.6 |
| C961 | 4030006860 | S.CER C1608 JB 1H 102K-T | B | 183.2/90.3 |
| C962 | 4030006860 | S.CER C1608 JB 1H 102K-T | B | 187.7/90.3 |
| C963 | 4030006860 | S.CER C1608 JB 1H 102K-T | B | 188.7/81.7 |
| C964 | 4030006860 | S.CER C1608 JB 1H 102K-T | B | 193/81.7 |
| C965 | 4030006860 | S.CER C1608 JB 1H 102K-T | B | 193.7/90.3 |
| C966 | 4030006860 | S.CER C1608 JB 1H 102K-T | B | 194.9/78.8 |
| C967 | 4030006860 | S.CER C1608 JB 1H 102K-T | B | 222.7/78.7 |
| C968 | 4030006860 | S.CER C1608 JB 1H 102K-T | B | 228.7/79 |
| C969 | 4030006860 | S.CER C1608 JB 1H 102K-T | B | 222/74.4 |
| C970 | 4030006860 | S.CER C1608 JB 1H 102K-T | B | 229.9/74.4 |
| C971 | 4030006860 | S.CER C1608 JB 1H 102K-T | B | 220.9/49.2 |
| C972 | 4030006860 | S.CER C1608 JB 1H 102K-T | B | 229.5/50.2 |
| C973 | 4030006860 | S.CER C1608 JB 1H 102K-T | B | 227.1/62.2 |
| C974 | 4030006860 | S.CER C1608 JB 1H 102K-T | B | 218.4/63.2 |
| C975 | 4030006860 | S.CER C1608 JB 1H 102K-T | B | 227.1/66.7 |
| C976 | 4030006860 | S.CER C1608 JB 1H 102K-T | B | 218.4/68.1 |
| C977 | 4030006860 | S.CER C1608 JB 1H 102K-T | T | 181.7/23.9 |
| C978 | 4030006860 | S.CER C1608 JB 1H 102K-T | T | 159.4/23.6 |
| C979 | 4030006860 | S.CER C1608 JB 1H 102K-T | T | 190.4/18.9 |
| C980 | 4030006860 | S.CER C1608 JB 1H 102K-T | T | 188.7/24.5 |
| C981 | 4030006860 | S.CER C1608 JB 1H 102K-T | T | 166.1/22.6 |
| C982 | 4030006860 | S.CER C1608 JB 1H 102K-T | T | 173.3/42.7 |
| C983 | 4030011600 | S.CER C1608 JB 1E 104K-T | T | 180.7/84.3 |
| C984 | 4030010210 | S.CER C3216 JB 1C 105M-T | B | 198.6/85.6 |
| C985 | 4030011600 | S.CER C1608 JB 1E 104K-T | T | 195.5/83.6 |
| C991 | 4030006880 | S.CER C1608 JB 1H 472K-T | T | 208.4/92 |
| C992 | 4030006880 | S.CER C1608 JB 1H 472K-T | T | 208.4/94 |
| C993 | 4030006880 | S.CER C1608 JB 1H 472K-T | T | 220.2/93 |
| C994 | 4030006880 | S.CER C1608 JB 1H 472K-T | T | 220.2/81.4 |
| C995 | 4030006880 | S.CER C1608 JB 1H 472K-T | T | 208.3/80 |
| C996 | 4030006880 | S.CER C1608 JB 1H 472K-T | T | 220.2/78.6 |
| C997 | 4030006880 | S.CER C1608 JB 1H 472K-T | T | 218.4/73.2 |
| | | | | |
| J1 | 6510022490 | S.CNR AXK5S30045P | T | 40/98 |
| J2 | 6510019870 | S.CNR AXK5S40045P | T | 85/98 |
| J51 | 6910014251 | CNR IMSA-9202B-2-06Z041-PT1 | | |
| J102 | 6510019981 | S.CNR 52808-1671 (1690) | T | 72.5/40 |
| J602 | 6510019971 | S.CNR 52808-1071 | T | 95.5/14.5 |
| J604 | 6510019971 | S.CNR 52808-1071 | T | 72.5/23 |
| J802 | 6510024261 | S.CNR S9B-PH-SM4-TB (LF) (SN) | T | 158.5/5 |
| J803 | 6510024401 | CNR S11B-EH (LF) (SN) | | |
| J804 | 6510024251 | S.CNR S5B-PH-SM4-TB (LF) (SN) | T | 213.2/5 |
| J805 | 6510024111 | S.CNR 52793-2070 (2090) | T | 129.5/123.9 |
| J806 | 6510024131 | S.CNR IMSA-9637S-40Y905 | T | 193/4.7 |
| J807 | 6510024151 | S.CNR 50FY-BMT-TB (LF) (SN) | T | 53.6/22 |
| J808 | 6510022471 | S.CNR 40FLT-SM2-TB (LF) (SN) | T | 175.3/34.3 |
| J809 | 6510022471 | S.CNR 40FLT-SM2-TB (LF) (SN) | T | 143.4/34.3 |
| J810 | 6510022731 | S.CNR S13B-PH-SM4-TB (LF) (SN) | T | 120/7 |
| J811 | 6510021561 | S.CNR 52808-2470 (2490) | T | 214.3/84.5 |
| J812 | 6510020701 | S.CNR 52793-1270 (1290) | T | 19.5/123.9 |
| J813 | 6510020081 | S.CNR 52808-2071 (2090) | T | 189/89.8 |
| J814 | 6510019971 | S.CNR 52808-1071 | T | 229/79.5 |
| J815 | 6510019991 | S.CNR 52808-2271 (2291) | T | 229/58 |
| J816 | 6510019991 | S.CNR 52808-2271 (2291) | T | 171.2/17.5 |
| J820 | 6510003581 | CNR S10B-EH-S (LF) (SN) | | |
| J821 | 6510003551 | CNR S07B-EH-S (LF) (SN) | | |
| J822 | 6510021601 | S.CNR S2B-PH-SM4-TB (LF) (SN) | T | 15.5/18 |
| J823 | 6510021601 | S.CNR S2B-PH-SM4-TB (LF) (SN) | T | 53.8/122.6 |

M.=Mounted side (T: Mounted on the Top side, B: Mounted on the Bottom side)
S.=Surface mount

## [LOGIC UNIT]

| REF NO. | ORDER NO. | DESCRIPTION | | M. | H/V LOCATION |
|---|---|---|---|---|---|
| J824 | 6510024100 | CNR | SC25-02WL | | |
| J825 | 6510019421 | S.CNR | B8B-ZR-SM4-TF (LF) (SN) | T | 29.4/20.8 |
| J826 | 6510023801 | S.CNR | S4B-ZR-SM4A-TF (LF) (SN) | T | 141.3/4.5 |
| DS401 | 5040002930 | S.LED | SML-512MW T86 | T | 11.9/96.4 |
| DS402 | 5040002930 | S.LED | SML-512MW T86 | T | 11.9/94.9 |
| DS403 | 5040002930 | S.LED | SML-512MW T86 | T | 11.9/93.1 |
| S51 | 2260001890 | S.SW | SKQDPA | T | 142.6/106.8 |
| T401 | 5920000841 | S.TSM | H1102NL | T | 150/20 |
| EP101 | 6910013310 | S.BEA | MMZ1608D121B | T | 3.6/74.9 |
| EP102 | 6910013310 | S.BEA | MMZ1608D121B | T | 10.3/80.5 |
| EP103 | 6910013310 | S.BEA | MMZ1608D121B | T | 14.9/80.7 |
| EP201 | 6910012350 | S.BEA | MMZ1608Y 102BT | T | 201.5/22.1 |
| EP202 | 6910012350 | S.BEA | MMZ1608Y 102BT | T | 198.3/28 |
| EP203 | 6910012350 | S.BEA | MMZ1608Y 102BT | T | 83.7/86.4 |
| EP204 | 6910012350 | S.BEA | MMZ1608Y 102BT | T | 79.6/72.4 |
| EP401 | 6910013310 | S.BEA | MMZ1608D121B | T | 19.4/79.6 |
| EP402 | 6910013310 | S.BEA | MMZ1608D121B | T | 17.3/75.6 |
| EP403 | 6910013310 | S.BEA | MMZ1608D121B | T | 19.4/82.5 |
| EP801 | 6910013310 | S.BEA | MMZ1608D121B | T | 204.4/9.8 |
| EP802 | 6910013310 | S.BEA | MMZ1608D121B | T | 202.1/10.6 |
| EP803 | 6910013310 | S.BEA | MMZ1608D121B | T | 200.8/10.6 |
| EP804 | 6910013310 | S.BEA | MMZ1608D121B | T | 199.5/10.6 |
| EP805 | 6910013310 | S.BEA | MMZ1608D121B | B | 201.4/8.2 |
| EP806 | 6910013310 | S.BEA | MMZ1608D121B | T | 198.2/10.6 |
| EP807 | 6910013310 | S.BEA | MMZ1608D121B | B | 200.1/8.2 |
| EP808 | 6910013310 | S.BEA | MMZ1608D121B | T | 196.9/10.6 |
| EP809 | 6910013310 | S.BEA | MMZ1608D121B | B | 198.8/8.2 |
| EP810 | 6910013310 | S.BEA | MMZ1608D121B | T | 195.6/10.6 |
| EP811 | 6910013310 | S.BEA | MMZ1608D121B | B | 197.5/8.2 |
| EP812 | 6910013310 | S.BEA | MMZ1608D121B | B | 196.2/8.2 |
| EP813 | 6910013310 | S.BEA | MMZ1608D121B | T | 194.3/10.6 |
| EP814 | 6910013310 | S.BEA | MMZ1608D121B | T | 193/10.6 |
| EP815 | 6910013310 | S.BEA | MMZ1608D121B | T | 191.7/10.9 |
| EP816 | 6910013310 | S.BEA | MMZ1608D121B | T | 190.4/11.6 |
| EP817 | 6910013310 | S.BEA | MMZ1608D121B | T | 189.1/12.3 |
| EP818 | 6910013310 | S.BEA | MMZ1608D121B | T | 187.8/12 |
| EP819 | 6910013310 | S.BEA | MMZ1608D121B | T | 186.5/11.6 |
| EP820 | 6910013310 | S.BEA | MMZ1608D121B | T | 183.5/10 |
| EP821 | 6910015980 | S.BEA | MMZ1608S 181CT-AS | T | 71.1/116.5 |
| EP822 | 6910015980 | S.BEA | MMZ1608S 181CT-AS | T | 72.5/116.5 |
| EP826 | 6910012350 | S.BEA | MMZ1608Y 102BT | T | 133.2/118.1 |
| EP827 | 6910012350 | S.BEA | MMZ1608Y 102BT | B | 137.3/124.5 |
| EP828 | 6910012350 | S.BEA | MMZ1608Y 102BT | B | 137.3/123.1 |
| EP829 | 6910012350 | S.BEA | MMZ1608Y 102BT | T | 135.2/117.3 |
| EP972 | 6910015970 | S.BEA | MMZ1608B 301CT-AS | T | 139/11.1 |
| EP973 | 6910015970 | S.BEA | MMZ1608B 301CT-AS | T | 142/11.1 |
| EP996 | 6910015970 | S.BEA | MMZ1608B 301CT-AS | B | 188.5/92.1 |
| EP997 | 6910015970 | S.BEA | MMZ1608B 301CT-AS | B | 189.5/83.5 |
| EP1001 | 6910015970 | S.BEA | MMZ1608B 301CT-AS | B | 193.5/83.5 |
| EP1002 | 6910015970 | S.BEA | MMZ1608B 301CT-AS | B | 194.5/92.1 |
| EP1101 | 6910013310 | S.BEA | MMZ1608D121B | T | 39.4/13.9 |
| EP1102 | 6910013310 | S.BEA | MMZ1608D121B | T | 40.1/16.6 |
| EP1103 | 6910013310 | S.BEA | MMZ1608D121B | T | 40.8/13.9 |
| EP1104 | 6910013310 | S.BEA | MMZ1608D121B | T | 41.5/16.6 |
| EP1105 | 6910013310 | S.BEA | MMZ1608D121B | T | 42.2/13.9 |
| EP1106 | 6910013310 | S.BEA | MMZ1608D121B | T | 42.9/16.6 |
| EP1107 | 6910013310 | S.BEA | MMZ1608D121B | T | 43.6/13.9 |
| EP1108 | 6910013310 | S.BEA | MMZ1608D121B | T | 44.3/16.6 |
| EP1109 | 6910013310 | S.BEA | MMZ1608D121B | T | 45/13.9 |
| EP1110 | 6910013310 | S.BEA | MMZ1608D121B | T | 45.7/16.6 |
| EP1111 | 6910013310 | S.BEA | MMZ1608D121B | T | 46.4/13.9 |
| EP1112 | 6910013310 | S.BEA | MMZ1608D121B | T | 47.1/16.6 |
| EP1113 | 6910013310 | S.BEA | MMZ1608D121B | T | 47.8/13.9 |
| EP1114 | 6910013310 | S.BEA | MMZ1608D121B | T | 48.5/16.6 |
| EP1115 | 6910013310 | S.BEA | MMZ1608D121B | T | 49.2/13.9 |
| EP1116 | 6910013310 | S.BEA | MMZ1608D121B | T | 49.9/16.6 |
| EP1117 | 6910013310 | S.BEA | MMZ1608D121B | T | 50.6/13.9 |
| EP1118 | 6910013310 | S.BEA | MMZ1608D121B | T | 51.3/16.6 |
| EP1119 | 6910013310 | S.BEA | MMZ1608D121B | T | 52/13.9 |
| EP1120 | 6910013310 | S.BEA | MMZ1608D121B | T | 52.7/16.6 |
| EP1121 | 6910013310 | S.BEA | MMZ1608D121B | T | 53.4/13.9 |
| EP1122 | 6910013310 | S.BEA | MMZ1608D121B | T | 54.1/16.6 |
| EP1123 | 6910013310 | S.BEA | MMZ1608D121B | T | 54.8/13.9 |
| EP1124 | 6910013310 | S.BEA | MMZ1608D121B | T | 42.8/29.6 |
| EP1125 | 6910013310 | S.BEA | MMZ1608D121B | T | 43.5/27 |
| EP1126 | 6910013310 | S.BEA | MMZ1608D121B | T | 44.2/29.6 |
| EP1127 | 6910013310 | S.BEA | MMZ1608D121B | T | 44.9/27 |
| EP1128 | 6910013310 | S.BEA | MMZ1608D121B | T | 45.6/29.6 |
| EP1129 | 6910013310 | S.BEA | MMZ1608D121B | T | 46.3/27 |
| EP1130 | 6910013310 | S.BEA | MMZ1608D121B | T | 47/29.6 |
| EP1131 | 6910013310 | S.BEA | MMZ1608D121B | T | 47.7/27 |
| EP1132 | 6910013310 | S.BEA | MMZ1608D121B | T | 48.4/29.6 |
| EP1133 | 6910013310 | S.BEA | MMZ1608D121B | T | 49.1/27 |
| EP1134 | 6910013310 | S.BEA | MMZ1608D121B | T | 49.8/29.6 |
| EP1135 | 6910013310 | S.BEA | MMZ1608D121B | T | 50.5/27 |
| EP1136 | 6910013310 | S.BEA | MMZ1608D121B | T | 51.2/29.6 |
| EP1137 | 6910013310 | S.BEA | MMZ1608D121B | T | 51.9/27 |
| EP1138 | 6910013310 | S.BEA | MMZ1608D121B | T | 52.6/29.6 |
| EP1139 | 6910013310 | S.BEA | MMZ1608D121B | T | 53.3/27 |
| EP1140 | 6910013310 | S.BEA | MMZ1608D121B | T | 54/29.6 |
| EP1141 | 6910013310 | S.BEA | MMZ1608D121B | T | 54.7/27 |
| EP1142 | 6910013310 | S.BEA | MMZ1608D121B | T | 55.4/29.6 |
| EP1143 | 6910013310 | S.BEA | MMZ1608D121B | T | 56.1/27 |
| EP1144 | 6910013310 | S.BEA | MMZ1608D121B | T | 56.8/29.6 |
| EP1145 | 6910013310 | S.BEA | MMZ1608D121B | T | 57.5/27 |
| EP1146 | 6910013310 | S.BEA | MMZ1608D121B | T | 58.2/29.6 |

## [PA UNIT]

| REF NO. | ORDER NO. | DESCRIPTION | | M. | H/V LOCATION |
|---|---|---|---|---|---|
| MF1 | 2710000770 | FAN | FCB34AC12A | | |
| W1 | 8900012790 | CBL | OPC-1299 | | |

## [PA200W BOARD]

| REF NO. | ORDER NO. | DESCRIPTION | | M. | H/V LOCATION |
|---|---|---|---|---|---|
| IC2 | 1180001541 | S.IC | TA78L08F (TE12L,F) | T | 58.8/15.1 |
| Q1 | 1520000531 | S.TR | 2SB1119S-TD-E | T | 42.8/19.2 |
| Q2 | 1590000680 | S.TR | DTC114EUA T106 | T | 45.8/13.5 |
| Q101 | 1560001241 | S.FET | RD01MUS1-T113 | T | 5.9/66.4 |
| Q201 | 1590003051 | S.FET | PD55003-E | T | 20.5/53.1 |
| Q301 | 1590003350 | S.FET | SD2918 | T | 64/45.8 |
| Q401 | 1590003361 | FET | SD2931-12 | | |
| Q402 | 1590003361 | FET | SD2931-12 | | |
| D1 | 1730000561 | S.ZEN | RD2.7M-T2B-A B1 | T | 100.6/22.8 |
| D401 | 1750000271 | S.DIO | 1SS301 (TE85L,F) | T | 116.8/99.1 |
| D402 | 1750000271 | S.DIO | 1SS301 (TE85L,F) | T | 118.3/35.9 |
| D403 | 1750000271 | S.DIO | 1SS301 (TE85L,F) | T | 104/98.3 |
| D404 | 1750000271 | S.DIO | 1SS301 (TE85L,F) | T | 104/35.7 |
| L1 | 6200005011 | S.COL | NLV25T-100J | T | 14.7/18 |
| L2 | 6200005011 | S.COL | NLV25T-100J | T | 14.7/20.5 |
| L3 | 6200005011 | S.COL | NLV25T-100J | T | 14.7/23 |
| L6 | 6200005011 | S.COL | NLV25T-100J | T | 14.7/25.5 |
| L7 | 6200010881 | S.COL | CDRH124NP-330MC | T | 77.3/11 |
| L101 | 6200005131 | S.COL | NLC453232T-101K-PF | T | 5.6/59.6 |
| L102 | 6200007220 | S.COL | EXCCL4532U1 | T | 6/38.4 |
| L201 | 6180001240 | COL | LAL 04NA 820K | | |
| L202 | 6140004350 | COL | LR-475 | | |
| L301 | 6200003261 | S.COL | NLV32T-101J | T | 46.1/36.4 |
| L303 | 6200001831 | S.COL | NLV32T-100J | T | 86.9/26.2 |
| L304 | 2040000490 | COL | EXC-ELDR25C | | |
| L305 | 2040000490 | COL | EXC-ELDR25C | | |
| L306 | 6140004340 | COL | LR-474 | | |
| L307 | 6200001831 | S.COL | NLV32T-100J | T | 75.7/100.2 |
| L401 | 6200003261 | S.COL | NLV32T-101J | T | 100.4/98.3 |
| L402 | 6200003261 | S.COL | NLV32T-101J | T | 100.1/35.8 |
| L403 | 6140002590 | COL | LR-296 (TR18X8X8 D12A) | | |
| L404 | 6140000720 | S.COL | LR-95 | T | 166.4/67 |
| L501 | 6140002030 | COL | LR-230 (SK-10M-15Y 120) | | |
| R1 | 7030003440 | S.RES | ERJ3GEYJ 102 V (1 k) | T | 42.8/12.8 |
| R2 | 7030003560 | S.RES | ERJ3GEYJ 103 V (10 k) | T | 42.8/14.2 |
| R3 | 7510001740 | TMR | DTN-C103F3H-STS-40 | | |
| R4 | 7030000380 | S.RES | MCR10EZHJ 1 k | T | 39.7/22.5 |
| R5 | 7030008061 | S.RES | ERA3YED 222V (2.2 k) | T | 104.3/23.1 |
| R6 | 7030007210 | S.RES | ERA3YEB 102V (1 k) | T | 103.6/16.5 |
| R7 | 7030007210 | S.RES | ERA3YEB 102V (1 k) | T | 103.6/17.8 |
| R101 | 7030003370 | S.RES | ERJ3GEYJ 271 V (270) | T | 6/87.2 |
| R102 | 7030003220 | S.RES | ERJ3GEYJ 150 V (15) | T | 3.9/86.1 |
| R103 | 7030003370 | S.RES | ERJ3GEYJ 271 V (270) | T | 6/85 |
| R104 | 7030003360 | S.RES | ERJ3GEYJ 221 V (220) | T | 4.8/71.3 |
| R105 | 7030003430 | S.RES | ERJ3GEYJ 821 V (820) | T | 6/73.3 |
| R106 | 7030003480 | S.RES | ERJ3GEYJ 222 V (2.2 k) | T | 9.2/73.8 |
| R107 | 7030003440 | S.RES | ERJ3GEYJ 102 V (1 k) | T | 2.2/64.7 |
| R108 | 7030003200 | S.RES | ERJ3GEYJ 100 V (10) | T | 9.2/68.3 |
| R110 | 7030000230 | S.RES | MCR10EZHJ 56 (560) | T | 11.3/56.6 |
| R111 | 7030003420 | S.RES | ERJ3GEYJ 681 V (680) | T | 13.3/58.6 |
| R112 | 7030003510 | S.RES | ERJ3GEYJ 392 V (3.9 k) | T | 12.6/60.6 |
| R113 | 7030003500 | S.RES | ERJ3GEYJ 332 V (3.3 k) | T | 6.8/75.2 |
| R115 | 7030003520 | S.RES | ERJ3GEYJ 472 V (4.7 k) | T | 13.1/40.8 |
| R117 | 7030003530 | S.RES | ERJ3GEYJ 562 V (5.6 k) | T | 7.7/76.5 |
| R118 | 7030003550 | S.RES | ERJ3GEYJ 822 V (8.2 k) | T | 11.7/40.8 |
| R119 | 7030008240 | S.RES | ERJ12Y0R00U | T | 5/49.6 |
| R201 | 7030004050 | S.RES | ERJ3GEYJ 1R0 V (1) | T | 13.8/48.6 |
| R202 | 7030003410 | S.RES | ERJ3GEYJ 561 V (560) | T | 23.1/43.1 |
| R203 | 7030010800 | S.RES | ERJ1TYJ 2R7U (2.7) | T | 18.4/65.5 |
| R205 | 7030006260 | S.RES | ERJ12YJ471U (470) | T | 30.3/55.7 |
| R301 | 7310005210 | TRI | VM5CK-PVB 20 k | | |
| R302 | 7030008180 | S.RES | ERJ12YJ331U (330) | T | 48.3/40.6 |
| R305 | 7030003530 | S.RES | ERJ3GEYJ 562 V (5.6 k) | T | 49.6/43.5 |
| R307 | 7070000830 | RES | ERG3SJ 101 (100) | | |
| R309 | 7030010570 | S.RES | ERJ1TYJ 4R7U (4.7) | T | 80/45.8 |
| R310 | 7310005200 | TRI | VM5CK-PVB 2 k | | |
| R312 | 7070000830 | RES | ERG3SJ 101 (100) | | |
| R401 | 7030010960 | S.RES | ERJ1TYJ 120U (12) | T | 89.8/90.7 |
| R402 | 7030010960 | S.RES | ERJ1TYJ 120U (12) | T | 93.5/90.7 |
| R403 | 7030010960 | S.RES | ERJ1TYJ 120U (12) | T | 97.2/90.7 |
| R404 | 7030010960 | S.RES | ERJ1TYJ 120U (12) | T | 90.8/43.3 |
| R405 | 7030010960 | S.RES | ERJ1TYJ 120U (12) | T | 94.5/43.3 |
| R406 | 7030010960 | S.RES | ERJ1TYJ 120U (12) | T | 98.2/43.3 |
| R407 | 7310005230 | TRI | VM5CK-PVB 10 k | | |
| R408 | 7030000420 | S.RES | MCR10EZHJ 2.2 k | T | 116.3/96 |
| R409 | 7030000420 | S.RES | MCR10EZHJ 2.2 k | T | 116.3/38 |
| R410 | 7310005230 | TRI | VM5CK-PVB 10 k | | |
| R411 | 7030010520 | S.RES | ERJ1TYJ 101U (100) | T | 107.6/93.9 |
| R412 | 7030010520 | S.RES | ERJ1TYJ 101U (100) | T | 107.5/40.2 |
| R413 | 7030010520 | S.RES | ERJ1TYJ 101U (100) | T | 111.3/93.9 |
| R414 | 7030010520 | S.RES | ERJ1TYJ 101U (100) | T | 111.2/40.2 |
| R416 | 7070000890 | RES | ERG3SJ 150 (15) | | |
| R418 | 7070001190 | RES | ERG3SJ180 (18) | | |
| R420 | 7070000890 | RES | ERG3SJ 150 (15) | | |
| R422 | 7070001190 | RES | ERG3SJ180 (18) | | |
| R423 | 7030003460 | S.RES | ERJ3GEYJ 152 V (1.5 k) | T | 95.9/98.4 |
| R424 | 7030003460 | S.RES | ERJ3GEYJ 152 V (1.5 k) | T | 99.4/33.6 |
| R425 | 7310005200 | TRI | VM5CK-PVB 2 k | | |
| R426 | 7310005200 | TRI | VM5CK-PVB 2 k | | |

M.=Mounted side (T: Mounted on the Top side, B: Mounted on the Bottom side)
S.=Surface mount

## [PA200W BOARD]

| REF NO. | ORDER NO. | DESCRIPTION | | M. | H/V LOCATION |
|---|---|---|---|---|---|
| R427 | 7070001200 | RES | ERG3SJ100P (10) | | |
| R501 | 7070000890 | RES | ERG3SJ 150 (15) | | |
| R502 | 7070000890 | RES | ERG3SJ 150 (15) | | |
| R503 | 7030003500 | S.RES | ERJ3GEYJ 332 V (3.3 k) | T | 171.8/16.7 |
| R504 | 7030003500 | S.RES | ERJ3GEYJ 332 V (3.3 k) | T | 169.9/15.9 |
| R507 | 7030003500 | S.RES | ERJ3GEYJ 332 V (3.3 k) | T | 139.1/17.9 |
| R508 | 7030003500 | S.RES | ERJ3GEYJ 332 V (3.3 k) | T | 137.3/19.2 |
| R511 | 7070000890 | RES | ERG3SJ 150 (15) | | |
| R512 | 7070000890 | RES | ERG3SJ 150 (15) | | |
| R513 | 7070001000 | RES | ERG3SJ 821 (820) | | |
| R514 | 7070001000 | RES | ERG3SJ 821 (820) | | |
| R521 | 7030011160 | S.RES | RL7520WT-R010-F | T | 165.2/20.2 |
| R522 | 7030011160 | S.RES | RL7520WT-R010-F | T | 159.6/20.2 |
| R523 | 7030011160 | S.RES | RL7520WT-R010-F | T | 154/20.2 |
| C1 | 4030011600 | S.CER | C1608 JB 1E 104K-T | T | 18.9/18 |
| C2 | 4030006880 | S.CER | C1608 JB 1H 472K-T | T | 18.9/20.5 |
| C3 | 4030006880 | S.CER | C1608 JB 1H 472K-T | T | 18.9/23 |
| C6 | 4030006880 | S.CER | C1608 JB 1H 472K-T | T | 18.9/25.5 |
| C7 | 4030006900 | S.CER | C1608 JB 1H 103K-T | T | 70/6.8 |
| C8 | 4030006880 | S.CER | C1608 JB 1H 472K-T | T | 42.8/15.6 |
| C9 | 4030011600 | S.CER | C1608 JB 1E 104K-T | T | 57.6/11.4 |
| C10 | 4510008520 | S.ELE | EEE1CA470SP | T | 52/15.5 |
| C11 | 4030006900 | S.CER | C1608 JB 1H 103K-T | T | 60.4/11.4 |
| C12 | 4510008520 | S.ELE | EEE1CA470SP | T | 64.9/15.5 |
| C15 | 4030006880 | S.CER | C1608 JB 1H 472K-T | T | 104.3/20.4 |
| C16 | 4030006880 | S.CER | C1608 JB 1H 472K-T | T | 103/23.1 |
| C17 | 4510008550 | S.ELE | EEE1HA010SR | T | 95.9/22.8 |
| C102 | 4030017810 | S.CER | C1608 CH 1H 102J-T | T | 4.1/76.2 |
| C103 | 4030011600 | S.CER | C1608 JB 1E 104K-T | T | 9.2/72.5 |
| C104 | 4030011600 | S.CER | C1608 JB 1E 104K-T | T | 9.5/75.2 |
| C106 | 4030017320 | S.CER | GRM21BB11H104KA01 | T | 2.2/67.7 |
| C107 | 4030011600 | S.CER | C1608 JB 1E 104K-T | T | 9.2/70.9 |
| C108 | 4030017810 | S.CER | C1608 CH 1H 102J-T | T | 9.2/69.6 |
| C109 | 4030017320 | S.CER | GRM21BB11H104KA01L | T | 8.1/62.6 |
| C110 | 4030017810 | S.CER | C1608 CH 1H 102J-T | T | 9/64.2 |
| C111 | 4030017810 | S.CER | C1608 CH 1H 102J-T | T | 9/56.4 |
| C112 | 4030017320 | S.CER | GRM21BB11H104KA01L | T | 8.7/54.8 |
| C113 | 4030011600 | S.CER | C1608 JB 1E 104K-T | T | 5.3/102.4 |
| C114 | 4030011600 | S.CER | C1608 JB 1E 104K-T | T | 13.9/60.6 |
| C201 | 4030017320 | S.CER | GRM21BB11H104KA01L | T | 18.2/43.1 |
| C202 | 4030017810 | S.CER | C1608 CH 1H 102J-T | T | 15.7/61.3 |
| C204 | 4030008490 | S.CER | C2012 JB 1H 682K-T | T | 31.2/61.6 |
| C206 | 4030008700 | S.CER | GRM21BB11H473KA01L | T | 29.3/61.6 |
| C207 | 4030008700 | S.CER | GRM21BB11H473KA01L | T | 34.4/36.7 |
| C301 | 4030004760 | S.CER | C2012 JF 1H 104Z-T | T | 49.4/45.5 |
| C303 | 4030011600 | S.CER | C1608 JB 1E 104K-T | T | 43.4/35.4 |
| C305 | 4030004760 | S.CER | C2012 JF 1H 104Z-T | T | 44.4/42.6 |
| C307 | 4030017810 | S.CER | C1608 CH 1H 102J-T | T | 39.7/31.7 |
| C309 | 4030011600 | S.CER | C1608 JB 1E 104K-T | T | 41.1/31.7 |
| C311 | 4030018750 | S.CER | C3225 CH 2J 682K-T | T | 54.1/58.9 |
| C313 | 4030011600 | S.CER | C1608 JB 1E 104K-T | T | 89.1/26.9 |
| C314 | 4510008050 | ELE | 63 ME 220 CZ | | |
| C317 | 4030018790 | S.CER | C3225 JB 2E 104K-T | T | 76.8/34 |
| C318 | 4030011600 | S.CER | C1608 JB 1E 104K-T | T | 77.2/96.7 |
| C319 | 4030018790 | S.CER | C3225 JB 2E 104K-T | T | 70.4/79 |
| C401 | 4030011790 | S.CER | GRM55RF52A684ZD01L | T | 92.4/82.2 |
| C402 | 4030011790 | S.CER | GRM55RF52A684ZD01L | T | 92.4/51.8 |
| C403 | 4030011600 | S.CER | C1608 JB 1E 104K-T | T | 79.9/100.1 |
| C404 | 4030011600 | S.CER | C1608 JB 1E 104K-T | T | 88.6/30.3 |
| C405 | 4030006900 | S.CER | C1608 JB 1H 103K-T | T | 79.9/98.8 |
| C406 | 4030006900 | S.CER | C1608 JB 1H 103K-T | T | 88.6/31.6 |
| C407 | 4030017810 | S.CER | C1608 CH 1H 102J-T | T | 79.9/97.5 |
| C408 | 4030017810 | S.CER | C1608 CH 1H 102J-T | T | 88.6/32.9 |
| C409 | 4030018790 | S.CER | C3225 JB 2E 104K-T | T | 111.3/100.2 |
| C410 | 4030018790 | S.CER | C3225 JB 2E 104K-T | T | 111.2/33.9 |
| C411 | 4030006880 | S.CER | C1608 JB 1H 472K-T | T | 114.9/99.1 |
| C412 | 4030006880 | S.CER | C1608 JB 1H 472K-T | T | 116.3/35 |
| C413 | 4030011600 | S.CER | C1608 JB 1E 104K-T | T | 97.8/99.1 |
| C414 | 4030011600 | S.CER | C1608 JB 1E 104K-T | T | 97.4/36.5 |
| C415 | 4030011790 | S.CER | GRM55RF52A684ZD01L | T | 102.8/88.8 |
| C416 | 4030011790 | S.CER | GRM55RF52A684ZD01L | T | 103.8/49 |
| C417 | 4030018760 | S.CER | C4532 CH 2A 104K-T | T | 190.2/82.6 |
| C418 | 4030018760 | S.CER | C4532 CH 2A 104K-T | T | 193.9/82.6 |
| C419 | 4030018760 | S.CER | C4532 CH 2A 104K-T | T | 190.2/53.4 |
| C420 | 4030018760 | S.CER | C4532 CH 2A 104K-T | T | 193.9/53.4 |
| C501 | 4030018790 | S.CER | C3225 JB 2E 104K-T | T | 183.8/32 |
| C502 | 4030018780 | S.CER | C3225 JB 2J 473K-T | T | 180.4/32 |
| C503 | 4030018770 | S.CER | C3216 CH 2J 102J-T | T | 177.3/32 |
| C504 | 4510006830 | ELE | 63 ME 470CZ | | |
| C505 | 4510006830 | ELE | 63 ME 470CZ | | |
| C506 | 4030006880 | S.CER | C1608 JB 1H 472K-T | T | 173.7/15.9 |
| C507 | 4030006880 | S.CER | C1608 JB 1H 472K-T | T | 137.2/17 |
| C510 | 4030018790 | S.CER | C3225 JB 2E 104K-T | T | 170.2/13.6 |
| C511 | 4030018780 | S.CER | C3225 JB 2J 473K-T | T | 170.2/10.6 |
| C512 | 4030018770 | S.CER | C3216 CH 2J 102J-T | T | 169.9/7.2 |
| C513 | 4510008050 | ELE | 63 ME 220 CZ | | |
| C514 | 4030011790 | S.CER | GRM55RF52A684ZD01L | T | 164.8/6.7 |
| C515 | 4030011790 | S.CER | GRM55RF52A684ZD01L | T | 148.4/6.6 |
| J1 | 6510007020 | CNR | TMP-J01X-V6 | | |
| J2 | 6510022311 | S.CNR | B5B-PH-SM4-TB (LF) (SN) | T | 6/23 |
| J5 | 6510020421 | S.CNR | S4B-PH-SM4-TB (LF) (SN) | T | 93/4.5 |
| J401 | 6510017920 | CNR | 1811P342 | | |
| J402 | 6910001040 | CNR | IPS-1136 | | |
| W401 | 9025900670 | WIR | 23/05/060/B21/W07 | | |
| W501 | 9040401001 | JMP | 74/98/050/X98/X98 | | |
| EP501 | 6910011330 | TER | OT-009 M3 | | |
| EP502 | 6910011330 | TER | OT-009 M3 | | |
| EP503 | 6910000640 | BEA | FSRH090160RN000B | | |

## [DC-DC BOARD]

| REF NO. | ORDER NO. | DESCRIPTION | | M. | H/V LOCATION |
|---|---|---|---|---|---|
| IC21 | 1180002510 | S.REG | LM2673S-3.3 | T | 130/20.9 |
| IC41 | 1180002510 | S.REG | LM2673S-3.3 | T | 97.6/94.7 |
| IC61 | 1180002520 | S.REG | LM2673S-5.0 | T | 97.6/59.8 |
| IC81 | 1180002520 | S.REG | LM2673S-5.0 | T | 38/13.5 |
| IC101 | 1180002500 | S.REG | LM2673S-ADJ | T | 96.6/26.6 |
| IC121 | 1180002530 | S.REG | LM2594M-12 | T | 128.6/69.2 |
| Q141 | 1590003310 | S.TR | DTD113ZK T146 | T | 7.8/95.4 |
| D21 | 1750000960 | S.DIO | RB081L-20 | T | 125.2/32.8 |
| D41 | 1750000960 | S.DIO | RB081L-20 | T | 85.7/88.1 |
| D61 | 1750000960 | S.DIO | RB081L-20 | T | 88.6/54.3 |
| D81 | 1750000960 | S.DIO | RB081L-20 | T | 31.2/22 |
| D101 | 1750000960 | S.DIO | RB081L-20 | T | 87.6/21.9 |
| D121 | 1710000840 | S.DIO | 1SR154-400 TE25 | T | 145.3/70.6 |
| D122 | 1750001011 | S.DIO | MBRD835LT4G | T | 120.6/82.8 |
| D123 | 1750000960 | S.DIO | RB081L-20 | T | 132.6/86.1 |
| D141 | 1750000520 | S.DIO | DAN222TL | T | 11.3/94.8 |
| L21 | 6200003950 | S.COL | HF50ACC 322513-T | T | 117.9/55.1 |
| L22 | 6200010891 | S.COL | CDRH124NP-150MC | T | 115.5/34.2 |
| L23 | 6200010881 | S.COL | CDRH124NP-330MC | T | 130/50.7 |
| L41 | 6200009790 | S.COL | BLM31PG121SN1 | T | 63.2/81.3 |
| L42 | 6200010891 | S.COL | CDRH124NP-150MC | T | 84.7/80.3 |
| L43 | 6200010881 | S.COL | CDRH124NP-330MC | T | 68.3/94 |
| L44 | 6200009790 | S.COL | BLM31PG121SN1 | T | 63.2/83.6 |
| L61 | 6200003950 | S.COL | HF50ACC 322513-T | T | 62.9/46.6 |
| L62 | 6200010901 | S.COL | CDRH104RNP-100NC | T | 80.4/45 |
| L63 | 6200010881 | S.COL | CDRH124NP-330MC | T | 66.5/58 |
| L81 | 6200003950 | S.COL | HF50ACC 322513-T | T | 27.4/47.8 |
| L82 | 6200010901 | S.COL | CDRH104RNP-100NC | T | 22.7/32 |
| L83 | 6200010881 | S.COL | CDRH124NP-330MC | T | 36.1/43.1 |
| L101 | 6200003950 | S.COL | HF50ACC 322513-T | T | 62.9/16.6 |
| L102 | 6200010881 | S.COL | CDRH124NP-330MC | T | 84.9/12.1 |
| L103 | 6190001191 | S.COL | D10F-#A814AY-101K | T | 65.5/26.6 |
| L121 | 6190001640 | S.COL | SLF12555T-101M1R1 | T | 119.3/72.3 |
| L122 | 6190001191 | S.COL | D10F-#A814AY-101K | T | 141.6/80.9 |
| L141 | 6200001831 | S.COL | NLV32T-100J | T | 10.5/99.4 |
| L142 | 6200010901 | S.COL | CDRH104RNP-100NC | T | 97.3/109 |
| R21 | 7030006091 | S.RES | ERA3YED 822V (8.2 k) | T | 119.1/19.7 |
| R41 | 7030006091 | S.RES | ERA3YED 822V (8.2 k) | T | 98.9/83.8 |
| R61 | 7030006091 | S.RES | ERA3YED 822V (8.2 k) | T | 98.8/48.5 |
| R81 | 7030006091 | S.RES | ERA3YED 822V (8.2 k) | T | 27/12.2 |
| R101 | 7030009851 | S.RES | ERA3YED 271V (270) | T | 102/17.9 |
| R102 | 7030007230 | S.RES | ERA3YED 102V (1 k) | T | 102/20.8 |
| R103 | 7030006091 | S.RES | ERA3YED 822V (8.2 k) | T | 97.9/15.7 |
| R121 | 7030003640 | S.RES | ERJ3GEYJ 473 V (47 k) | T | 133.3/72.6 |
| R122 | 7030003640 | S.RES | ERJ3GEYJ 473 V (47 k) | T | 132/71.8 |
| R141 | 7030008190 | S.RES | ERJ12YJ330U (33) | T | 14.7/99 |
| C9 | 4510008910 | S.ELE | EEEFC1C101P | T | 138.5/69.7 |
| C21 | 4030011600 | S.CER | C1608 JB 1E 104K-T | T | 125.3/40.8 |
| C22 | 4510008610 | S.ELE | 10SVP150MX | T | 131.1/38.1 |
| C23 | 4030011340 | S.CER | C1608 CH 1H 471J-T | T | 119.1/17.1 |
| C24 | 4030004750 | S.CER | C2012 JB 1H 103K-T | T | 119.7/23.7 |
| C25 | 4030005110 | S.CER | C2012 JB 1E 473K-T | T | 125.3/27.5 |
| C26 | 4550006770 | S.TAN | TEESVD2 1C 476M-12R | T | 132.1/30 |
| C27 | 4510008610 | S.ELE | 10SVP150MX | T | 115.3/47.4 |
| C41 | 4030011600 | S.CER | C1608 JB 1E 104K-T | T | 77.5/89.5 |
| C42 | 4510008610 | S.ELE | 10SVP150MX | T | 80.8/95.2 |
| C43 | 4030011340 | S.CER | C1608 CH 1H 471J-T | T | 101.4/83.8 |
| C44 | 4030004750 | S.CER | C2012 JB 1H 103K-T | T | 94.8/84.1 |
| C45 | 4030005110 | S.CER | C2012 JB 1E 473K-T | T | 91.4/90.6 |
| C46 | 4550007140 | S.TAN | TEESVD 1C 107M12R | T | 87.6/96.4 |
| C47 | 4510008610 | S.ELE | 10SVP150MX | T | 70.5/79.1 |
| C61 | 4030011600 | S.CER | C1608 JB 1E 104K-T | T | 81.5/56 |
| C62 | 4510008610 | S.ELE | 10SVP150MX | T | 77.3/60.9 |
| C63 | 4030011340 | S.CER | C1608 CH 1H 471J-T | T | 101.4/48.5 |
| C64 | 4030004750 | S.CER | C2012 JB 1H 103K-T | T | 94.8/49.1 |
| C65 | 4030011600 | S.CER | C1608 JB 1E 104K-T | T | 91.1/55.4 |
| C66 | 4550006770 | S.TAN | TEESVD2 1C 476M-12R | T | 85.6/61.7 |
| C67 | 4510008610 | S.ELE | 10SVP150MX | T | 69.6/44 |
| C81 | 4030011600 | S.CER | C1608 JB 1E 104K-T | T | 33.1/28.4 |
| C82 | 4510008610 | S.ELE | 10SVP150MX | T | 37.9/32.4 |
| C83 | 4030011340 | S.CER | C1608 CH 1H 471J-T | T | 26.9/9.7 |
| C84 | 4030004750 | S.CER | C2012 JB 1H 103K-T | T | 27.7/16.1 |
| C85 | 4030011600 | S.CER | C1608 JB 1E 104K-T | T | 33.4/19.8 |
| C86 | 4550006770 | S.TAN | TEESVD2 1C 476M-12R | T | 38/25.1 |
| C87 | 4510008610 | S.ELE | 10SVP150MX | T | 21.7/42.7 |
| C101 | 4030011600 | S.CER | C1608 JB 1E 104K-T | T | 80.1/22.7 |
| C102 | 4510008610 | S.ELE | 10SVP150MX | T | 75.7/27.3 |
| C103 | 4030011340 | S.CER | C1608 CH 1H 471J-T | T | 100.4/15.6 |
| C104 | 4030004750 | S.CER | C2012 JB 1H 103K-T | T | 93.8/16.2 |
| C105 | 4030005110 | S.CER | C2012 JB 1E 473K-T | T | 90.1/22.5 |
| C106 | 4550006770 | S.TAN | TEESVD2 1C 476M-12R | T | 83.8/28.2 |
| C107 | 4510008610 | S.ELE | 10SVP150MX | T | 68.6/11.3 |
| C122 | 4030011600 | S.CER | C1608 JB 1E 104K-T | T | 132/69.2 |
| C123 | 4510008940 | S.ELE | EEEFC1V470P | T | 131.7/79.3 |
| C124 | 4030006880 | S.CER | C1608 JB 1H 472K-T | T | 120.8/95.1 |
| C141 | 4030011600 | S.CER | C1608 JB 1E 104K-T | T | 7.6/97.9 |
| RL142 | 6330001760 | RLY | AW3023 | | |
| J2 | 6510003471 | CNR | B11B-EH-S (LF) (SN) | | |
| J3 | 6510003431 | CNR | B07B-EH-S (LF) (SN) | | |
| J4 | 6510003461 | CNR | B10B-EH-S (LF) (SN) | | |
| J5 | 6510020421 | S.CNR | S4B-PH-SM4-TB (LF) (SN) | T | 128.2/97.5 |
| W1 | 8900012780 | CBL | OPC-1298 | | |

M.=Mounted side (T: Mounted on the Top side, B: Mounted on the Bottom side)

S.=Surface mount

## [TUNER UNIT]

| REF NO. | ORDER NO. | DESCRIPTION | | M. | H/V LOCATION |
|---|---|---|---|---|---|
| MF1 | 2710000780 | MTR | MP24Z (STEPPING MOTOR) | | |
| MF2 | 2710000780 | MTR | MP24Z (STEPPING MOTOR) | | |
| MF3 | 2710000470 | FAN | MF60B-12H901 | | |
| W1 | 8900012901 | CBL | OPC-1345R | | |
| W2 | 8900012901 | CBL | OPC-1345R | | |
| W3 | 8900017140 | CBL | OPC-927A (P1,N24,L100) | | |
| W51 | 8600037090 | CBL | SX2590 P51 | | |

## [CTRL UNIT]

| REF NO. | ORDER NO. | DESCRIPTION | | M. | H/V LOCATION |
|---|---|---|---|---|---|
| IC1 | 1140004120 | S.IC | M38022M2-138FP | T | 65.7/81.8 |
| IC2 | 1130010390 | S.IC | HN58X2416TI | T | 54/86.9 |
| IC3 | 1130003921 | S.IC | TC4S69F (TE85R,F) | T | 55.9/58.2 |
| IC4 | 1180001071 | S.IC | TA7805F (TE16L,Q) | B | 63/57.7 |
| IC5 | 1130009691 | S.IC | TC74HCT7007AF (F) | B | 92.5/91.6 |
| IC6 | 1130006441 | S.IC | TC7S08F (TE85R,F) | T | 81.7/70.3 |
| IC51 | 1130011530 | S.IC | CD74HC4094M96 | T | 42.2/72.4 |
| IC52 | 1130007690 | S.IC | BU4066BCF-E2 | B | 12.5/76.8 |
| IC55 | 1130011530 | S.IC | CD74HC4094M96 | B | 100.2/76.1 |
| IC56 | 1130011530 | S.IC | CD74HC4094M96 | B | 114.3/76.1 |
| IC57 | 1160000131 | S.IC | TD62783AFG (S,EL) | T | 99.6/73.1 |
| IC58 | 1160000131 | S.IC | TD62783AFG (S,EL) | T | 113.7/73.1 |
| IC101 | 1110000960 | S.IC | NJM4558M-TE1-#FMZB | T | 19.4/37.8 |
| IC151 | 1120002301 | S.IC | TC74AC04F (F) | B | 35.3/44.3 |
| IC153 | 1130012011 | S.IC | TC7SZ32F (TE85L,F) | T | 31.2/47.3 |
| IC154 | 1130012011 | S.IC | TC7SZ32F (TE85L,F) | T | 42.4/45.8 |
| IC155 | 1130012011 | S.IC | TC7SZ32F (TE85L,F) | T | 36/47.5 |
| IC156 | 1130012021 | S.IC | TC74ACT112F (EL,F) | T | 38.4/56.5 |
| IC201 | 1110000960 | S.IC | NJM4558M-TE1-#FMZB | T | 19/54.7 |
| IC301 | 1110002690 | S.IC | NJM2903M-TE1-#FMZB | T | 73.4/59 |
| IC401 | 1160000131 | S.IC | TD62783AFG (S,EL) | T | 13.6/86.1 |
| IC402 | 1160000131 | S.IC | TD62783AFG (S,EL) | T | 31.6/84.7 |
| Q1 | 1590001330 | S.TR | DTA114EUA T106 | T | 78.5/75.2 |
| Q2 | 1590000680 | S.TR | DTC114EUA T106 | T | 77.8/71.2 |
| Q3 | 1590000680 | S.TR | DTC114EUA T106 | T | 128.4/74.5 |
| Q4 | 1590000680 | S.TR | DTC114EUA T106 | T | 128.4/77 |
| Q5 | 1590000680 | S.TR | DTC114EUA T106 | T | 128.4/81.3 |
| Q6 | 1590000680 | S.TR | DTC114EUA T106 | T | 128.4/83.8 |
| Q7 | 1590000680 | S.TR | DTC114EUA T106 | T | 128.4/88.5 |
| Q8 | 1590000680 | S.TR | DTC114EUA T106 | T | 128.4/91 |
| Q9 | 1590000680 | S.TR | DTC114EUA T106 | T | 128.4/95.7 |
| Q10 | 1590000680 | S.TR | DTC114EUA T106 | T | 128.4/100.5 |
| Q11 | 1590000680 | S.TR | DTC114EUA T106 | B | 85.7/99.8 |
| Q51 | 1590000680 | S.TR | DTC114EUA T106 | T | 6.1/78.6 |
| Q52 | 1590000680 | S.TR | DTC114EUA T106 | T | 12.5/78.6 |
| Q53 | 1590000680 | S.TR | DTC114EUA T106 | B | 6.6/72.8 |
| Q54 | 1560001260 | S.FET | 2SK3018 T106 | B | 121.2/80.2 |
| Q55 | 1590000680 | S.TR | DTC114EUA T106 | B | 130.2/68.9 |
| Q59 | 1590000680 | S.TR | DTC114EUA T106 | T | 56.8/69.5 |
| Q201 | 1560000871 | S.FET | 2SK515-T1B-A (X33) | T | 52.6/43 |
| Q251 | 1590000680 | S.TR | DTC114EUA T106 | T | 74.2/34.9 |
| D1 | 1730000411 | S.ZEN | RD5.1M-T2B-A B2 | T | 63.4/58.4 |
| D2 | 1710000780 | S.DIO | MA114 (TX) | T | 67.7/55.9 |
| D3 | 1750000201 | S.DIO | 1SS319 (TE85R,F) | B | 129.5/98.1 |
| D4 | 1750000201 | S.DIO | 1SS319 (TE85R,F) | B | 129.5/90 |
| D5 | 1750000201 | S.DIO | 1SS319 (TE85R,F) | B | 129.5/82.8 |
| D6 | 1750000201 | S.DIO | 1SS319 (TE85R,F) | B | 129.5/76 |
| D7 | 1730000031 | S.ZEN | RD5.6M-T2B-A B2 | T | 63.6/54.9 |
| D101 | 1790000491 | S.DIO | HSM88ASTR-E | T | 14.7/24.3 |
| D102 | 1790000491 | S.DIO | HSM88ASTR-E | T | 25.6/29.5 |
| D103 | 1750000201 | S.DIO | 1SS319 (TE85R,F) | T | 19.3/42.1 |
| D151 | 1790000491 | S.DIO | HSM88ASTR-E | T | 32/38.2 |
| D152 | 1790000491 | S.DIO | HSM88ASTR-E | T | 39.4/38.2 |
| D153 | 1790000491 | S.DIO | HSM88ASTR-E | T | 28.4/57.2 |
| D154 | 1790000491 | S.DIO | HSM88ASTR-E | T | 29.6/53.4 |
| D201 | 1790000491 | S.DIO | HSM88ASTR-E | T | 57.6/37.2 |
| D202 | 1790000491 | S.DIO | HSM88ASTR-E | T | 48.5/37.1 |
| D203 | 1750000201 | S.DIO | 1SS319 (TE85R,F) | T | 18/60.9 |
| D251 | 1750000271 | S.DIO | 1SS301 (TE85L,F) | T | 72.1/36.5 |
| D301 | 1790000491 | S.DIO | HSM88ASTR-E | T | 81.5/58.3 |
| D302 | 1790000491 | S.DIO | HSM88ASTR-E | T | 88.4/59.6 |
| X1 | 6050009890 | S.XTL | CR-569 (6.144 MHz) | T | 83.2/79.5 |
| L1 | 6200003261 | S.COL | NLV32T-101J | T | 51.1/76.5 |
| L2 | 6200003261 | S.COL | NLV32T-101J | T | 54.5/77.8 |
| L4 | 2040000490 | COL | EXC-ELDR25C | | |
| L5 | 6200005131 | S.COL | NLC453232T-101K-PF | T | 121.6/100.3 |
| L6 | 6200003590 | S.COL | EXCCL3225U1 | T | 109.3/91.1 |
| L7 | 6200003590 | S.COL | EXCCL3225U1 | T | 106.3/91.2 |
| L8 | 6200003590 | S.COL | EXCCL3225U1 | T | 103.3/91.1 |
| L9 | 6200003950 | S.COL | HF50ACC 322513-T | B | 92/101 |
| L51 | 6200003261 | S.COL | NLV32T-101J | T | 106.3/86.9 |
| L52 | 6200005131 | S.COL | NLC453232T-101K-PF | T | 114.9/88.1 |
| L101 | 6140004410 | COL | LR-502 | | |
| L102 | 6200001831 | S.COL | NLV32T-100J | T | 20.9/66.5 |
| L103 | 6200003261 | S.COL | NLV32T-101J | T | 15.2/66.4 |
| L151 | 6140004410 | COL | LR-502 | | |
| L152 | 6200001831 | S.COL | NLV32T-100J | T | 41.4/63 |
| L201 | 6140004410 | COL | LR-502 | | |
| L202 | 6180003300 | COL | T6-222J (2.2M) | | |
| L301 | 6140004410 | COL | LR-502 | | |
| L302 | 6200003261 | S.COL | NLV32T-101J | B | 69.4/61.2 |
| L401 | 6200003950 | S.COL | HF50ACC 322513-T | T | 26.4/101.5 |
| L402 | 6200003950 | S.COL | HF50ACC 322513-T | T | 18.5/101.5 |
| R2 | 7030003680 | S.RES | ERJ3GEYJ 104 V (100 k) | T | 63/71 |
| R3 | 7030003680 | S.RES | ERJ3GEYJ 104 V (100 k) | T | 64.3/71 |
| R4 | 7030003680 | S.RES | ERJ3GEYJ 104 V (100 k) | T | 65.6/71 |
| R5 | 7030003680 | S.RES | ERJ3GEYJ 104 V (100 k) | T | 66.9/71 |
| R6 | 7030003560 | S.RES | ERJ3GEYJ 103 V (10 k) | T | 74.7/71 |
| R7 | 7030003440 | S.RES | ERJ3GEYJ 102 V (1 k) | T | 73.4/71 |
| R8 | 7030003680 | S.RES | ERJ3GEYJ 104 V (100 k) | T | 55.4/72.8 |
| R9 | 7030003680 | S.RES | ERJ3GEYJ 104 V (100 k) | T | 54.7/74.7 |
| R10 | 7030003680 | S.RES | ERJ3GEYJ 104 V (100 k) | T | 57.3/72.9 |
| R11 | 7030003680 | S.RES | ERJ3GEYJ 104 V (100 k) | T | 53.4/74.7 |
| R12 | 7030003440 | S.RES | ERJ3GEYJ 102 V (1 k) | T | 78.3/83.9 |
| R13 | 7030003680 | S.RES | ERJ3GEYJ 104 V (100 k) | T | 76.6/75.6 |
| R14 | 7030003680 | S.RES | ERJ3GEYJ 104 V (100 k) | T | 78.5/78.2 |
| R15 | 7030003440 | S.RES | ERJ3GEYJ 102 V (1 k) | T | 55.6/60.7 |
| R16 | 7030003320 | S.RES | ERJ3GEYJ 101 V (100) | T | 54.8/55.2 |
| R17 | 7030003560 | S.RES | ERJ3GEYJ 103 V (10 k) | T | 54.1/82.2 |

M.=Mounted side (T: Mounted on the Top side, B: Mounted on the Bottom side)
S.=Surface mount

## [CTRL BOARD]

| REF NO. | ORDER NO. | DESCRIPTION | M. | H/V LOCATION |
|---|---|---|---|---|
| R18 | 7030003560 | S.RES ERJ3GEYJ 103 V (10 k) | T | 54.1/80.9 |
| R19 | 7030003680 | S.RES ERJ3GEYJ 104 V (100 k) | T | 58.3/58.2 |
| R20 | 7030003570 | S.RES ERJ3GEYJ 123 V (12 k) | T | 59.6/60.6 |
| R21 | 7030003650 | S.RES ERJ3GEYJ 563 V (56 k) | T | 59.6/58.2 |
| R22 | 7030003450 | S.RES ERJ3GEYJ 122 V (1.2 k) | T | 66.3/58.5 |
| R23 | 7030003560 | S.RES ERJ3GEYJ 103 V (10 k) | B | 105.1/100 |
| R24 | 7030003440 | S.RES ERJ3GEYJ 102 V (1 k) | B | 102.9/98.8 |
| R25 | 7030003380 | S.RES ERJ3GEYJ 331 V (330) | B | 126/99.1 |
| R26 | 7030003380 | S.RES ERJ3GEYJ 331 V (330) | B | 126/97.1 |
| R27 | 7030003380 | S.RES ERJ3GEYJ 331 V (330) | B | 126/91 |
| R28 | 7030003380 | S.RES ERJ3GEYJ 331 V (330) | B | 126/89 |
| R29 | 7030003380 | S.RES ERJ3GEYJ 331 V (330) | B | 126/83.8 |
| R30 | 7030003380 | S.RES ERJ3GEYJ 331 V (330) | B | 126/81.8 |
| R31 | 7030003380 | S.RES ERJ3GEYJ 331 V (330) | B | 126/77 |
| R32 | 7030003380 | S.RES ERJ3GEYJ 331 V (330) | B | 126/75 |
| R40 | 7030003440 | S.RES ERJ3GEYJ 102 V (1 k) | T | 61.2/99.9 |
| R42 | 7030003860 | S.RES ERJ3GE JPW V | T | 60.4/71 |
| R43 | 7030003860 | S.RES ERJ3GE JPW V | T | 60.7/69 |
| R44 | 7030003860 | S.RES ERJ3GE JPW V | T | 68.2/71 |
| R45 | 7030003860 | S.RES ERJ3GE JPW V | T | 65.7/68.5 |
| R46 | 7030003860 | S.RES ERJ3GE JPW V | T | 70.6/68.9 |
| R51 | 7030003440 | S.RES ERJ3GEYJ 102 V (1 k) | B | 35.8/80.1 |
| R52 | 7030003440 | S.RES ERJ3GEYJ 102 V (1 k) | B | 34.3/80.1 |
| R53 | 7030003440 | S.RES ERJ3GEYJ 102 V (1 k) | B | 32.8/80.1 |
| R54 | 7030003440 | S.RES ERJ3GEYJ 102 V (1 k) | B | 31.2/80.1 |
| R55 | 7030003440 | S.RES ERJ3GEYJ 102 V (1 k) | B | 29.6/80.1 |
| R56 | 7030003440 | S.RES ERJ3GEYJ 102 V (1 k) | B | 28/80.1 |
| R57 | 7030003440 | S.RES ERJ3GEYJ 102 V (1 k) | B | 26.4/80.1 |
| R58 | 7030003440 | S.RES ERJ3GEYJ 102 V (1 k) | B | 24.8/80.1 |
| R59 | 7030003440 | S.RES ERJ3GEYJ 102 V (1 k) | T | 18.3/78.7 |
| R60 | 7030003440 | S.RES ERJ3GEYJ 102 V (1 k) | T | 17/76 |
| R61 | 7030003440 | S.RES ERJ3GEYJ 102 V (1 k) | T | 15.7/76 |
| R62 | 7030003440 | S.RES ERJ3GEYJ 102 V (1 k) | T | 14.4/78.7 |
| R63 | 7030003440 | S.RES ERJ3GEYJ 102 V (1 k) | T | 10.6/78.7 |
| R64 | 7030003440 | S.RES ERJ3GEYJ 102 V (1 k) | T | 9.3/74.8 |
| R65 | 7030003440 | S.RES ERJ3GEYJ 102 V (1 k) | T | 8/74.8 |
| R66 | 7030003520 | S.RES ERJ3GEYJ 472 V (4.7 k) | B | 15.6/81.6 |
| R67 | 7030003200 | S.RES ERJ3GEYJ 100 V (10) | T | 99.8/90.4 |
| R68 | 7030003200 | S.RES ERJ3GEYJ 100 V (10) | T | 98.5/90.4 |
| R69 | 7030003200 | S.RES ERJ3GEYJ 100 V (10) | T | 97.2/90.4 |
| R70 | 7030004040 | S.RES ERJ3GEYJ 4R7 V (4.7) | T | 104.8/65.9 |
| R71 | 7030004040 | S.RES ERJ3GEYJ 4R7 V (4.7) | T | 103.5/65.9 |
| R72 | 7030004040 | S.RES ERJ3GEYJ 4R7 V (4.7) | T | 102.2/65.9 |
| R73 | 7030004040 | S.RES ERJ3GEYJ 4R7 V (4.7) | T | 100.9/65.9 |
| R74 | 7030004040 | S.RES ERJ3GEYJ 4R7 V (4.7) | T | 99.6/65.9 |
| R75 | 7030004040 | S.RES ERJ3GEYJ 4R7 V (4.7) | T | 98.3/65.9 |
| R76 | 7030004040 | S.RES ERJ3GEYJ 4R7 V (4.7) | T | 97/65.9 |
| R77 | 7030004040 | S.RES ERJ3GEYJ 4R7 V (4.7) | T | 95.7/65.9 |
| R78 | 7030004040 | S.RES ERJ3GEYJ 4R7 V (4.7) | B | 120.1/64.6 |
| R84 | 7030004040 | S.RES ERJ3GEYJ 4R7 V (4.7) | B | 110.5/64.6 |
| R85 | 7030004040 | S.RES ERJ3GEYJ 4R7 V (4.7) | B | 108.9/64.6 |
| R86 | 7030003560 | S.RES ERJ3GEYJ 103 V (10 k) | B | 116.1/83.6 |
| R87 | 7030003860 | S.RES ERJ3GE JPW V | T | 32.5/76 |
| R88 | 7030003860 | S.RES ERJ3GE JPW V | T | 31.2/76 |
| R89 | 7030003860 | S.RES ERJ3GE JPW V | T | 29.9/76 |
| R90 | 7030003860 | S.RES ERJ3GE JPW V | T | 28.6/76 |
| R91 | 7030003860 | S.RES ERJ3GE JPW V | T | 27.3/76 |
| R92 | 7030003860 | S.RES ERJ3GE JPW V | T | 26/76 |
| R95 | 7030003860 | S.RES ERJ3GE JPW V | T | 15.7/78.7 |
| R97 | 7030003860 | S.RES ERJ3GE JPW V | T | 8/78.7 |
| R101 | 7030010950 | S.RES ERJ1TYJ 100U (10) | T | 18.6/29.5 |
| R102 | 7030010950 | S.RES ERJ1TYJ 100U (10) | T | 22.3/29.5 |
| R103 | 7030003560 | S.RES ERJ3GEYJ 103 V (10 k) | T | 12.2/34.7 |
| R104 | 7030003560 | S.RES ERJ3GEYJ 103 V (10 k) | T | 27.6/34.9 |
| R105 | 7030003720 | S.RES ERJ3GEYJ 224 V (220 k) | T | 12.2/37.3 |
| R106 | 7030003720 | S.RES ERJ3GEYJ 224 V (220 k) | T | 25/36.7 |
| R107 | 7030003660 | S.RES ERJ3GEYJ 683 V (68 k) | T | 14.1/36.5 |
| R108 | 7030003660 | S.RES ERJ3GEYJ 683 V (68 k) | T | 23.2/34.8 |
| R109 | 7030003720 | S.RES ERJ3GEYJ 224 V (220 k) | T | 13.3/38.7 |
| R110 | 7030003720 | S.RES ERJ3GEYJ 224 V (220 k) | T | 25/37.9 |
| R111 | 7030009340 | S.RES ERJ3GEYJ 275V (2.7 M) | T | 13.7/40.6 |
| R112 | 7030003810 | S.RES ERJ3GEYJ 125 V (1.2 M) | T | 25/39.1 |
| R115 | 7030009340 | S.RES ERJ3GEYJ 275V (2.7 M) | T | 12.4/40.6 |
| R151 | 7030007190 | S.RES ERJ12YJ220U (22) | T | 37.6/27.2 |
| R152 | 7030010620 | S.RES ERJ12YJ180U (18) | B | 38.1/26.8 |
| R153 | 7030007190 | S.RES ERJ12YJ220U (22) | T | 37.6/31.8 |
| R154 | 7030010620 | S.RES ERJ12YJ180U (18) | B | 38.1/31.8 |
| R155 | 7030003320 | S.RES ERJ3GEYJ 101 V (100) | T | 37/39.6 |
| R157 | 7030003320 | S.RES ERJ3GEYJ 101 V (100) | T | 30.3/40.1 |
| R158 | 7030003560 | S.RES ERJ3GEYJ 103 V (10 k) | T | 31.8/41.5 |
| R159 | 7030003560 | S.RES ERJ3GEYJ 103 V (10 k) | T | 38.4/41.5 |
| R160 | 7030003280 | S.RES ERJ3GEYJ 470 V (47) | T | 30/42.3 |
| R161 | 7030003280 | S.RES ERJ3GEYJ 470 V (47) | T | 39.7/43 |
| R162 | 7030003440 | S.RES ERJ3GEYJ 102 V (1 k) | T | 30.9/44.9 |
| R163 | 7030003440 | S.RES ERJ3GEYJ 102 V (1 k) | T | 42/43.3 |
| R164 | 7030003280 | S.RES ERJ3GEYJ 470 V (47) | T | 33.6/47.7 |
| R165 | 7030003280 | S.RES ERJ3GEYJ 470 V (47) | T | 39.2/46.4 |
| R166 | 7030003440 | S.RES ERJ3GEYJ 102 V (1 k) | T | 34.3/44.7 |
| R167 | 7030003440 | S.RES ERJ3GEYJ 102 V (1 k) | T | 39.2/45.1 |
| R168 | 7030003280 | S.RES ERJ3GEYJ 470 V (47) | T | 38.8/49.8 |
| R169 | 7030003440 | S.RES ERJ3GEYJ 102 V (1 k) | T | 38.8/51.1 |
| R170 | 7030003280 | S.RES ERJ3GEYJ 470 V (47) | T | 31.5/58.2 |
| R171 | 7030003280 | S.RES ERJ3GEYJ 470 V (47) | T | 31.5/56.9 |
| R172 | 7030003480 | S.RES ERJ3GEYJ 222 V (2.2 k) | T | 32/53.7 |
| R173 | 7030003500 | S.RES ERJ3GEYJ 332 V (3.3 k) | T | 27.2/54.9 |
| R174 | 7030003360 | S.RES ERJ3GEYJ 221 V (220) | T | 27.2/52.3 |
| R201 | 7030010420 | S.RES ERJ1TYJ 560U (56) | T | 49/29.7 |
| R202 | 7030010420 | S.RES ERJ1TYJ 560U (56) | B | 49.3/29.4 |
| R203 | 7030010420 | S.RES ERJ1TYJ 560U (56) | T | 49/33.7 |
| R204 | 7030010420 | S.RES ERJ1TYJ 560U (56) | B | 49.3/34 |
| R205 | 7030003560 | S.RES ERJ3GEYJ 103 V (10 k) | T | 52.3/45.4 |
| R206 | 7030003560 | S.RES ERJ3GEYJ 103 V (10 k) | T | 57.4/41.5 |
| R207 | 7030003800 | S.RES ERJ3GEYJ 105 V (1 M) | T | 50.1/41.9 |
| R208 | 7030003560 | S.RES ERJ3GEYJ 103 V (10 k) | T | 54.8/42.6 |

## [CTRL BOARD]

| REF NO. | ORDER NO. | DESCRIPTION | M. | H/V LOCATION |
|---|---|---|---|---|
| R209 | 7030003520 | S.RES ERJ3GEYJ 472 V (4.7 k) | T | 54.8/40 |
| R210 | 7030003440 | S.RES ERJ3GEYJ 102 V (1 k) | T | 56.1/42.7 |
| R211 | 7030003480 | S.RES ERJ3GEYJ 222 V (2.2 k) | T | 13.1/49.4 |
| R212 | 7030003560 | S.RES ERJ3GEYJ 103 V (10 k) | T | 25.1/49.4 |
| R213 | 7030005331 | S.RES ERA3YED 562V (5.6 k) | T | 17.8/49.9 |
| R214 | 7030005331 | S.RES ERA3YED 562V (5.6 k) | T | 16.5/49.9 |
| R215 | 7030005871 | S.RES ERA3YKD 104V (100 k) | T | 14/53 |
| R216 | 7030008121 | S.RES ERA3YED 682V (6.8 k) | T | 20.6/50 |
| R217 | 7030008121 | S.RES ERA3YED 682V (6.8 k) | T | 22.3/48.1 |
| R218 | 7030005871 | S.RES ERA3YKD 104V (100 k) | T | 23.8/52 |
| R221 | 7030003670 | S.RES ERJ3GEYJ 823 V (82 k) | B | 17.1/57 |
| R222 | 7030003680 | S.RES ERJ3GEYJ 104 V (100 k) | T | 20.9/51.3 |
| R223 | 7030003820 | S.RES ERJ3GEYJ 155 V (1.5 M) | T | 14/55.8 |
| R224 | 7030003820 | S.RES ERJ3GEYJ 155 V (1.5 M) | T | 23.8/54.6 |
| R225 | 7030003560 | S.RES ERJ3GEYJ 103 V (10 k) | T | 14/61.4 |
| R226 | 7030003560 | S.RES ERJ3GEYJ 103 V (10 k) | T | 21.9/61.4 |
| R227 | 7030003560 | S.RES ERJ3GEYJ 103 V (10 k) | T | 14.7/63.4 |
| R228 | 7030003560 | S.RES ERJ3GEYJ 103 V (10 k) | T | 21.3/63.4 |
| R252 | 7030000230 | S.RES MCR10EZHJ 56 (560) | T | 70.8/31.9 |
| R253 | 7030000230 | S.RES MCR10EZHJ 56 (560) | T | 69.9/35.2 |
| R254 | 7030000230 | S.RES MCR10EZHJ 56 (560) | T | 70.8/38.7 |
| R255 | 7030000220 | S.RES MCR10EZHJ 47 (470) | T | 72.2/40.8 |
| R256 | 7030000230 | S.RES MCR10EZHJ 56 (560) | T | 72.4/31 |
| R301 | 7030003560 | S.RES ERJ3GEYJ 103 V (10 k) | T | 83.7/57.6 |
| R302 | 7030003670 | S.RES ERJ3GEYJ 823 V (82 k) | T | 81.9/61.2 |
| R303 | 7030010910 | S.RES ERJ1TYJ 150U (15) | B | 90.1/60.7 |
| R304 | 7030003560 | S.RES ERJ3GEYJ 103 V (10 k) | T | 85.5/62 |
| R305 | 7030003720 | S.RES ERJ3GEYJ 224 V (220 k) | T | 80.6/61.2 |
| R306 | 7030003660 | S.RES ERJ3GEYJ 683 V (68 k) | T | 78.7/57.2 |
| R307 | 7030003660 | S.RES ERJ3GEYJ 683 V (68 k) | T | 79.2/59.7 |
| R308 | 7030003840 | S.RES ERJ3GEYJ 225 V (2.2 M) | B | 76.5/58.3 |
| R309 | 7030003720 | S.RES ERJ3GEYJ 224 V (220 k) | T | 76.1/53.9 |
| R310 | 7030003840 | S.RES ERJ3GEYJ 225 V (2.2 M) | T | 73.4/54 |
| R311 | 7030003440 | S.RES ERJ3GEYJ 102 V (1 k) | T | 76/55.5 |
| R312 | 7030003560 | S.RES ERJ3GEYJ 103 V (10 k) | T | 73.4/55.5 |
| R313 | 7030003700 | S.RES ERJ3GEYJ 154 V (150 k) | T | 78.5/61.6 |
| R345 | 7030003560 | S.RES ERJ3GEYJ 103 V (10 k) | T | 88.3/83.7 |
| R401 | 7030004040 | S.RES ERJ3GEYJ 4R7 V (4.7) | T | 17.5/93.4 |
| R402 | 7030004040 | S.RES ERJ3GEYJ 4R7 V (4.7) | T | 16.2/93.4 |
| R403 | 7030004040 | S.RES ERJ3GEYJ 4R7 V (4.7) | T | 14.9/93.4 |
| R404 | 7030004040 | S.RES ERJ3GEYJ 4R7 V (4.7) | T | 13.6/93.4 |
| R405 | 7030004040 | S.RES ERJ3GEYJ 4R7 V (4.7) | T | 12.3/93.4 |
| R406 | 7030004040 | S.RES ERJ3GEYJ 4R7 V (4.7) | T | 11/93.4 |
| R407 | 7030004040 | S.RES ERJ3GEYJ 4R7 V (4.7) | T | 9.7/93.4 |
| R408 | 7030004040 | S.RES ERJ3GEYJ 4R7 V (4.7) | T | 8.4/93.4 |
| R409 | 7030004040 | S.RES ERJ3GEYJ 4R7 V (4.7) | B | 36.6/86.7 |
| R410 | 7030004040 | S.RES ERJ3GEYJ 4R7 V (4.7) | B | 35.1/86.7 |
| R411 | 7030004040 | S.RES ERJ3GEYJ 4R7 V (4.7) | B | 33.6/86.7 |
| R412 | 7030004040 | S.RES ERJ3GEYJ 4R7 V (4.7) | B | 32/86.7 |
| R413 | 7030004040 | S.RES ERJ3GEYJ 4R7 V (4.7) | B | 30.4/86.7 |
| R414 | 7030004040 | S.RES ERJ3GEYJ 4R7 V (4.7) | B | 28.8/86.7 |
| R415 | 7030004040 | S.RES ERJ3GEYJ 4R7 V (4.7) | B | 27.2/86.7 |
| R416 | 7030004040 | S.RES ERJ3GEYJ 4R7 V (4.7) | B | 25.6/86.7 |
| R417 | 7030003440 | S.RES ERJ3GEYJ 102 V (1 k) | B | 31.3/98.5 |
| R418 | 7030003440 | S.RES ERJ3GEYJ 102 V (1 k) | B | 44.8/98.5 |
| R419 | 7030003440 | S.RES ERJ3GEYJ 102 V (1 k) | B | 32.9/98.5 |
| R420 | 7030003440 | S.RES ERJ3GEYJ 102 V (1 k) | B | 46.4/98.5 |
| R421 | 7030003440 | S.RES ERJ3GEYJ 102 V (1 k) | B | 34.5/98.5 |
| R422 | 7030003440 | S.RES ERJ3GEYJ 102 V (1 k) | B | 48/98.5 |
| R423 | 7030003440 | S.RES ERJ3GEYJ 102 V (1 k) | B | 36.1/98.5 |
| R424 | 7030003440 | S.RES ERJ3GEYJ 102 V (1 k) | B | 49.6/98.5 |
| R425 | 7030003440 | S.RES ERJ3GEYJ 102 V (1 k) | B | 37.7/98.5 |
| R426 | 7030003440 | S.RES ERJ3GEYJ 102 V (1 k) | B | 51.2/98.5 |
| R427 | 7030003440 | S.RES ERJ3GEYJ 102 V (1 k) | B | 39.3/98.5 |
| R428 | 7030003440 | S.RES ERJ3GEYJ 102 V (1 k) | B | 52.8/98.5 |
| R429 | 7030003440 | S.RES ERJ3GEYJ 102 V (1 k) | B | 40.9/98.5 |
| R430 | 7030003440 | S.RES ERJ3GEYJ 102 V (1 k) | B | 54.4/98.5 |
| R431 | 7030003440 | S.RES ERJ3GEYJ 102 V (1 k) | B | 42.5/98.5 |
| R432 | 7030003440 | S.RES ERJ3GEYJ 102 V (1 k) | B | 56/98.5 |
| C1 | 4510008540 | S.ELE EEE1CA100SR | T | 42.6/80.3 |
| C2 | 4030011600 | S.CER C1608 JB 1E 104K-T | T | 45.8/82.3 |
| C3 | 4030006880 | S.CER C1608 JB 1H 472K-T | B | 89.5/100 |
| C4 | 4030006900 | S.CER C1608 JB 1H 103K-T | T | 56/74.7 |
| C5 | 4030006900 | S.CER C1608 JB 1H 103K-T | T | 58.6/72.9 |
| C6 | 4030006880 | S.CER C1608 JB 1H 472K-T | T | 74.6/74.7 |
| C7 | 4030017810 | S.CER C1608 CH 1H 102J-T | T | 75.3/76.6 |
| C8 | 4030011600 | S.CER C1608 JB 1E 104K-T | T | 56/81.3 |
| C9 | 4030009990 | S.CER C1608 CH 1H 200J-T | T | 75.3/80.5 |
| C10 | 4030011600 | S.CER C1608 JB 1E 104K-T | T | 51.7/79.8 |
| C11 | 4030006880 | S.CER C1608 JB 1H 472K-T | T | 76.6/78.2 |
| C12 | 4030009990 | S.CER C1608 CH 1H 200J-T | T | 76.6/81.5 |
| C13 | 4510008870 | S.ELE EEE1AA471UP | T | 48.5/56.6 |
| C14 | 4030011600 | S.CER C1608 JB 1E 104K-T | T | 60.7/55.3 |
| C15 | 4030011600 | S.CER C1608 JB 1E 104K-T | T | 67.3/53.7 |
| C16 | 4510008500 | S.ELE EEE1CA101WP | T | 66.6/48.8 |
| C17 | 4510008550 | S.ELE EEE1HA010SR | T | 133.3/100.5 |
| C18 | 4510008550 | S.ELE EEE1HA010SR | T | 133.3/95.7 |
| C19 | 4510008550 | S.ELE EEE1HA010SR | T | 138.4/91.9 |
| C20 | 4510008550 | S.ELE EEE1HA010SR | T | 133.3/89.7 |
| C21 | 4510008550 | S.ELE EEE1HA010SR | T | 138.4/85.3 |
| C22 | 4510008550 | S.ELE EEE1HA010SR | T | 133.3/83.1 |
| C23 | 4510008550 | S.ELE EEE1HA010SR | T | 138.4/78.6 |
| C24 | 4510008550 | S.ELE EEE1HA010SR | T | 133.3/76.5 |
| C25 | 4030011600 | S.CER C1608 JB 1E 104K-T | T | 53.6/57.7 |
| C26 | 4030006880 | S.CER C1608 JB 1H 472K-T | T | 61/58.2 |
| C38 | 4030011600 | S.CER C1608 JB 1E 104K-T | T | 91.3/87.5 |
| C39 | 4510008870 | S.ELE EEE1AA471UP | T | 57.9/49.8 |
| C40 | 4030011600 | S.CER C1608 JB 1E 104K-T | T | 84/70.6 |
| C41 | 4030011600 | S.CER C1608 JB 1E 104K-T | T | 78.5/73.2 |
| C43 | 4030006880 | S.CER C1608 JB 1H 472K-T | T | 88.8/95.5 |
| C66 | 4510008540 | S.ELE EEE1CA100SR | T | 106.6/81.6 |
| C68 | 4030011600 | S.CER C1608 JB 1E 104K-T | B | 103.6/82.8 |
| C69 | 4030011600 | S.CER C1608 JB 1E 104K-T | T | 118.4/79.9 |

M.=Mounted side (T: Mounted on the Top side, B: Mounted on the Bottom side)
S.=Surface mount

## [CTRL BOARD]

| REF NO. | ORDER NO. | DESCRIPTION | | M. | H/V LOCATION |
|---|---|---|---|---|---|
| C70 | 4030011600 | S.CER | C1608 JB 1E 104K-T | T | 95.8/80.5 |
| C71 | 4030011600 | S.CER | C1608 JB 1E 104K-T | T | 106.9/77.6 |
| C72 | 4510008540 | S.ELE | EEE1CA100SR | T | 111.6/83.3 |
| C88 | 4030011600 | S.CER | C1608 JB 1E 104K-T | B | 7.8/81.8 |
| C102 | 4010005530 | CER | HM60SJ SL 020C 500V | | |
| C103 | 4010005530 | CER | HM60SJ SL 020C 500V | | |
| C104 | 4610002250 | TRI | TZ03R200Y169B00 | | |
| C105 | 4030011540 | S.CER | C1608 CH 1H 750J-T | B | 13.1/28.5 |
| C106 | 4030011540 | S.CER | C1608 CH 1H 750J-T | T | 25.8/33.1 |
| C107 | 4030017810 | S.CER | C1608 CH 1H 102J-T | T | 12.2/36 |
| C108 | 4030017810 | S.CER | C1608 CH 1H 102J-T | T | 25.8/35.5 |
| C109 | 4030006880 | S.CER | C1608 JB 1H 472K-T | B | 21.6/38.4 |
| C110 | 4030006880 | S.CER | C1608 JB 1H 472K-T | B | 18.5/38.4 |
| C111 | 4510008540 | S.ELE | EEE1CA100SR | T | 25.4/45.8 |
| C112 | 4510008540 | S.ELE | EEE1CA100SR | T | 18.8/46.4 |
| C113 | 4030006880 | S.CER | C1608 JB 1H 472K-T | T | 16.3/41.8 |
| C114 | 4030006880 | S.CER | C1608 JB 1H 472K-T | T | 23/41.8 |
| C115 | 4030007100 | S.CER | C1608 CH 1H 560J-T | B | 13.1/26.9 |
| C116 | 4030011540 | S.CER | C1608 CH 1H 750J-T | T | 25.8/34.3 |
| C119 | 4030007100 | S.CER | C1608 CH 1H 560J-T | T | 16.9/24.1 |
| C151 | 4010005540 | CER | HM60SJ SL 030C 500V | | |
| C152 | 4030007070 | S.CER | C1608 CH 1H 330J-T | T | 33/34.3 |
| C153 | 4030007120 | S.CER | C1608 CH 1H 820J-T | T | 32.3/35.6 |
| C154 | 4030007070 | S.CER | C1608 CH 1H 330J-T | T | 38.5/34.5 |
| C155 | 4030007120 | S.CER | C1608 CH 1H 820J-T | T | 35.9/34.5 |
| C156 | 4030006880 | S.CER | C1608 JB 1H 472K-T | T | 29.8/37.5 |
| C157 | 4030006880 | S.CER | C1608 JB 1H 472K-T | T | 41.6/38.4 |
| C158 | 4030007060 | S.CER | C1608 CH 1H 270J-T | T | 29.7/35.6 |
| C159 | 4030006880 | S.CER | C1608 JB 1H 472K-T | T | 34.4/38.4 |
| C161 | 4030006880 | S.CER | C1608 JB 1H 472K-T | T | 45.2/51.5 |
| C162 | 4550003120 | S.TAN | TEESVD2 1A 476M12R | T | 46.7/46.3 |
| C163 | 4030007170 | S.CER | C1608 CH 1H 221J-T | T | 30.1/59.5 |
| C164 | 4030007170 | S.CER | C1608 CH 1H 221J-T | T | 31.5/55.6 |
| C165 | 4030006880 | S.CER | C1608 JB 1H 472K-T | T | 31.5/51.7 |
| C171 | 4030006880 | S.CER | C1608 JB 1H 472K-T | B | 40.2/37.7 |
| C173 | 4030006880 | S.CER | C1608 JB 1H 472K-T | T | 28.3/48.4 |
| C174 | 4030006880 | S.CER | C1608 JB 1H 472K-T | T | 42.2/49.6 |
| C175 | 4030006880 | S.CER | C1608 JB 1H 472K-T | T | 35.9/49.8 |
| C180 | 4030011600 | S.CER | C1608 JB 1E 104K-T | T | 28.3/49.7 |
| C181 | 4030011600 | S.CER | C1608 JB 1E 104K-T | T | 42.2/48.3 |
| C201 | 4010005580 | CER | HM60SJ SL 070D 500V | | |
| C202 | 4010005520 | CER | HM60SJ SL 010C 500V | | |
| C204 | 4030011570 | S.CER | CM105 CH 101G 50AT | T | 55.3/36.9 |
| C205 | 4030016550 | S.CER | CM105 CH 151G 50AT | T | 51.4/36.9 |
| C206 | 4030009530 | S.CER | C1608 CH 1H 030B-T | T | 52.7/36.9 |
| C207 | 4030006880 | S.CER | C1608 JB 1H 472K-T | T | 49.8/39.3 |
| C208 | 4030006880 | S.CER | C1608 JB 1H 472K-T | T | 56.1/40 |
| C209 | 4030017810 | S.CER | C1608 CH 1H 102J-T | T | 51.7/40 |
| C210 | 4030006880 | S.CER | C1608 JB 1H 472K-T | T | 53.5/40 |
| C211 | 4030006880 | S.CER | C1608 JB 1H 472K-T | T | 14.4/49.4 |
| C212 | 4030006880 | S.CER | C1608 JB 1H 472K-T | T | 23.8/49.4 |
| C213 | 4030006880 | S.CER | C1608 JB 1H 472K-T | B | 19.7/55.7 |
| C214 | 4030007170 | S.CER | C1608 CH 1H 221J-T | T | 14.7/59.4 |
| C215 | 4030007170 | S.CER | C1608 CH 1H 221J-T | T | 21.4/59.4 |
| C216 | 4030011340 | S.CER | C1608 CH 1H 471J-T | T | 15.4/61.4 |
| C217 | 4030011340 | S.CER | C1608 CH 1H 471J-T | T | 20.6/61.4 |
| C218 | 4030006880 | S.CER | C1608 JB 1H 472K-T | B | 18.2/54.1 |
| C252 | 4030006880 | S.CER | C1608 JB 1H 472K-T | T | 72.9/33.3 |
| C253 | 4030006880 | S.CER | C1608 JB 1H 472K-T | T | 76.6/38.3 |
| C254 | 4030006880 | S.CER | C1608 JB 1H 472K-T | T | 72.9/48.1 |
| C255 | 4030006880 | S.CER | C1608 JB 1H 472K-T | T | 73/38.2 |
| C301 | 4010005520 | CER | HM60SJ SL 010C 500V | | |
| C302 | 4030007030 | S.CER | C1608 CH 1H 150J-T | T | 85.5/56.6 |
| C303 | 4030007050 | S.CER | C1608 CH 1H 220J-T | T | 85.5/59.2 |
| C304 | 4030017810 | S.CER | C1608 CH 1H 102J-T | T | 83.7/60.5 |
| C305 | 4030017810 | S.CER | C1608 CH 1H 102J-T | T | 90.3/61.3 |
| C307 | 4030006880 | S.CER | C1608 JB 1H 472K-T | T | 78.7/55.8 |
| C308 | 4030006880 | S.CER | C1608 JB 1H 472K-T | T | 77.9/59.7 |
| C309 | 4030011600 | S.CER | C1608 JB 1E 104K-T | T | 68.8/59.8 |
| C310 | 4030009530 | S.CER | C1608 CH 1H 030B-T | T | 85.5/57.9 |
| C417 | 4510008540 | S.ELE | EEE1CA100SR | T | 22.6/77.6 |
| C418 | 4510008540 | S.ELE | EEE1CA100SR | T | 40.6/85.6 |
| C419 | 4030006880 | S.CER | C1608 JB 1H 472K-T | T | 19.6/78.7 |
| C420 | 4030006880 | S.CER | C1608 JB 1H 472K-T | T | 38.4/79.2 |
| RL251 | 6330001530 | RLY | NR-HD (5V) AE5349 | | |
| RL252 | 6330001460 | RLY | FTR-F1CA012V | | |
| RL253 | 6330001460 | RLY | FTR-F1CA012V | | |
| CP1 | 6910009670 | S.CHK | HK3-S-T | T | 67.7/100.1 |
| CP101 | 6910009670 | S.CHK | HK3-S-T | T | 5/83.4 |
| J1 | 6510023771 | S.CNR | 52793-2470 (2490) | T | 101.8/99.6 |
| J2 | 6510023761 | S.CNR | S10B-PH-SM4-TB (LF) (SN) | T | 148.3/82.8 |
| J51 | 6510023771 | S.CNR | 52793-2470 (2490) | T | 43.9/99.6 |
| J52 | 6510022031 | S.CNR | B10B-ZR-SM4-TF (LF) (SN) | T | 133/2.9 |
| J53 | 6510021431 | S.CNR | S8B-ZR-SM4A-TF (LF) (SN) | T | 134.6/65 |
| J101 | 6510017920 | CNR | 1811P342 | | |
| J251 | 6510017920 | CNR | 1811P342 | | |
| J252 | 6510017920 | CNR | 1811P342 | | |
| J301 | 6510017920 | CNR | 1811P342 | | |
| J351 | 6510007020 | CNR | TMP-J01X-V6 | | |
| W1 | 9029804001 | WIR | 72/99/040/X98/X98 | | |
| EP1 | 9040902903 | TUB | IRRAX 0.7 (d) L=22 mm | | |

## [ANT-SW UNIT]

| REF NO. | ORDER NO. | DESCRIPTION | | M. | H/V LOCATION |
|---|---|---|---|---|---|
| IC11 | 1130011510 | S.IC | BU2099FV-E2 | T | 160.6/33.6 |
| IC12 | 1180002391 | S.REG | S-812C33AMC-C2N-G | T | 152.4/28.7 |
| Q11 | 1590001001 | S.TR | RN2427(RE85R,F) | T | 156.9/38.6 |
| Q12 | 1590001001 | S.TR | RN2427(RE85R,F) | T | 152.3/36.9 |
| Q13 | 1590001001 | S.TR | RN2427(RE85R,F) | T | 164.7/38.5 |
| Q14 | 1590001001 | S.TR | RN2427(RE85R,F) | T | 164.7/17.5 |
| D51 | 1750000550 | S.DIO | 1SS355 TE-17 | T | 161.9/13.3 |
| D52 | 1750000550 | S.DIO | 1SS355 TE-17 | T | 140.3/42.9 |
| D53 | 1750000550 | S.DIO | 1SS355 TE-17 | T | 115.1/41.4 |
| D61 | 1750000550 | S.DIO | 1SS355 TE-17 | T | 118.9/19.7 |
| D62 | 1750000550 | S.DIO | 1SS355 TE-17 | T | 107.1/43 |
| D63 | 1750000550 | S.DIO | 1SS355 TE-17 | T | 79/43.6 |
| D71 | 1750000550 | S.DIO | 1SS355 TE-17 | T | 68.7/21.4 |
| D72 | 1750000550 | S.DIO | 1SS355 TE-17 | T | 61.6/42.9 |
| D73 | 1750000550 | S.DIO | 1SS355 TE-17 | T | 65.8/43.4 |
| D81 | 1750000550 | S.DIO | 1SS355 TE-17 | T | 36.9/19.7 |
| D82 | 1750000550 | S.DIO | 1SS355 TE-17 | T | 41.4/45.2 |
| D83 | 1750000550 | S.DIO | 1SS355 TE-17 | T | 28.2/45.3 |
| D84 | 1750000550 | S.DIO | 1SS355 TE-17 | T | 25.8/43 |
| L1 | 6200003590 | S.COL | EXCCL3225U1 | T | 155.7/27.5 |
| L2 | 6110001670 | COL | LA-253 | | |
| R1 | 7540000100 | ABS | SRYH-350L | | |
| R2 | 7540000130 | ABS | 2P-50A-301 | | |
| R3 | 7540000130 | ABS | 2P-50A-301 | | |
| R11 | 7030003320 | S.RES | ERJ3GEYJ 101 V (100) | T | 165.5/27.4 |
| R12 | 7030003320 | S.RES | ERJ3GEYJ 101 V (100) | T | 164.2/27.4 |
| R13 | 7030003320 | S.RES | ERJ3GEYJ 101 V (100) | T | 162.9/27.4 |
| R14 | 7030003320 | S.RES | ERJ3GEYJ 101 V (100) | T | 166.2/33.9 |
| R15 | 7030003320 | S.RES | ERJ3GEYJ 101 V (100) | T | 148.7/31.6 |
| R16 | 7030003320 | S.RES | ERJ3GEYJ 101 V (100) | T | 151.5/31.6 |
| R17 | 7030003320 | S.RES | ERJ3GEYJ 101 V (100) | T | 154.7/39.4 |
| R18 | 7030003320 | S.RES | ERJ3GEYJ 101 V (100) | T | 151.4/32.9 |
| R19 | 7030003320 | S.RES | ERJ3GEYJ 101 V (100) | T | 151.4/34.2 |
| R20 | 7030003320 | S.RES | ERJ3GEYJ 101 V (100) | T | 152.1/39.1 |
| R21 | 7030003320 | S.RES | ERJ3GEYJ 101 V (100) | T | 154.7/36.6 |
| R22 | 7030003320 | S.RES | ERJ3GEYJ 101 V (100) | T | 166.9/38.7 |
| R23 | 7030003320 | S.RES | ERJ3GEYJ 101 V (100) | T | 162.3/38.9 |
| R24 | 7030003320 | S.RES | ERJ3GEYJ 101 V (100) | T | 161/39.1 |
| R25 | 7030003320 | S.RES | ERJ3GEYJ 101 V (100) | T | 159.7/39.1 |
| R26 | 7030003320 | S.RES | ERJ3GEYJ 101 V (100) | T | 162.7/15.6 |
| C1 | 4010005610 | CER | HM60SJ SL 100D 500V | | |
| C2 | 4010005660 | CER | HM60SJ SL 220J 500V | | |
| C11 | 4030011600 | S.CER | C1608 JB 1E 104K-T | T | 160/27.6 |
| C12 | 4030011600 | S.CER | C1608 JB 1E 104K-T | T | 158.7/27.6 |
| C51 | 4030006880 | S.CER | C1608 JB 1H 472K-T | T | 163.5/13.6 |
| C52 | 4030006880 | S.CER | C1608 JB 1H 472K-T | T | 144.5/41.3 |
| C53 | 4030006880 | S.CER | C1608 JB 1H 472K-T | T | 113.5/41.7 |
| C61 | 4030006880 | S.CER | C1608 JB 1H 472K-T | T | 119.2/21.3 |
| C62 | 4030006880 | S.CER | C1608 JB 1H 472K-T | T | 107.4/44.5 |
| C63 | 4030006880 | S.CER | C1608 JB 1H 472K-T | T | 77.5/43.6 |
| C71 | 4030006880 | S.CER | C1608 JB 1H 472K-T | T | 69/19.9 |
| C72 | 4030006880 | S.CER | C1608 JB 1H 472K-T | T | 61.6/44.5 |
| C73 | 4030006880 | S.CER | C1608 JB 1H 472K-T | T | 73/43.4 |
| C81 | 4030006880 | S.CER | C1608 JB 1H 472K-T | T | 37.2/21.3 |
| C82 | 4030006880 | S.CER | C1608 JB 1H 472K-T | T | 42.9/45.2 |
| C83 | 4030006880 | S.CER | C1608 JB 1H 472K-T | T | 26.6/45.6 |
| C84 | 4030006880 | S.CER | C1608 JB 1H 472K-T | T | 25/45.6 |
| RL51 | 6330001460 | RLY | FTR-F1CA012V | | |
| RL52 | 6330001780 | RLY | FTR-MYAA012D | | |
| RL53 | 6330001780 | RLY | FTR-MYAA012D | | |
| RL61 | 6330001460 | RLY | FTR-F1CA012V | | |
| RL62 | 6330001780 | RLY | FTR-MYAA012D | | |
| RL63 | 6330001780 | RLY | FTR-MYAA012D | | |
| RL71 | 6330001460 | RLY | FTR-F1CA012V | | |
| RL72 | 6330001780 | RLY | FTR-MYAA012D | | |
| RL73 | 6330001780 | RLY | FTR-MYAA012D | | |
| RL81 | 6330001460 | RLY | FTR-F1CA012V | | |
| RL82 | 6330001780 | RLY | FTR-MYAA012D | | |
| RL83 | 6330001780 | RLY | FTR-MYAA012D | | |
| RL84 | 6330001780 | RLY | FTR-MYAA012D | | |
| J1 | 6510017930 | CNR | 1771P145-20 | | |
| J2 | 6510007020 | CNR | TMP-J01X-V6 | | |
| J3 | 6510007020 | CNR | TMP-J01X-V6 | | |
| J4 | 6510019971 | S.CNR | 52808-1071 | T | 153/22 |
| J51 | 6510000410 | CNR | MR-DS-E 02 | | |
| J61 | 6510000410 | CNR | MR-DS-E 02 | | |
| J71 | 6510000410 | CNR | MR-DS-E 02 | | |
| J81 | 6510000410 | CNR | MR-DS-E 02 | | |

M.=Mounted side (T: Mounted on the Top side, B: Mounted on the Bottom side)

S.=Surface mount

## [OSC UNIT]

| REF NO. | ORDER NO. | DESCRIPTION | | M. | H/V LOCATION |
|---|---|---|---|---|---|
| IC10 | 1180002610 | S.REG | BA12FP-E2 | T | 37.8/20 |
| IC91 | 1190002001 | S.IC | AD5260BRUZ50 | T | 26.8/12 |
| IC92 | 1130005721 | S.IC | TC7W04F (TE12L,F) | T | 23.7/6.1 |
| Q10 | 1590000680 | S.TR | DTC114EUA T106 | T | 32.4/35 |
| Q11 | 1590000680 | S.TR | DTC114EUA T106 | T | 22.1/42.4 |
| Q12 | 1590000680 | S.TR | DTC114EUA T106 | T | 29.1/41.5 |
| Q13 | 1590000680 | S.TR | DTC114EUA T106 | T | 31.6/41.5 |
| Q21 | 1530002060 | S.TR | 2SC4081 T106 R | T | 11.3/6.3 |
| Q22 | 1530002601 | S.TR | 2SC4215-O (TE85R,F) | T | 10.4/17.8 |
| Q23 | 1590000680 | S.TR | DTC114EUA T106 | T | 13/11 |
| Q42 | 1530002601 | S.TR | 2SC4215-O (TE85R,F) | T | 18.8/18.8 |
| Q43 | 1590000680 | S.TR | DTC114EUA T106 | T | 19.6/11.7 |
| Q61 | 1530002060 | S.TR | 2SC4081 T106 R | T | 26.1/36.1 |
| Q62 | 1530002060 | S.TR | 2SC4081 T106 R | T | 20.6/38.6 |
| Q70 | 1530002060 | S.TR | 2SC4081 T106 R | T | 9.9/41.2 |
| Q101 | 1530002700 | S.TR | 2SC4097 T106Q | T | 36.7/40 |
| D10 | 1790001250 | S.DIO | MA2S1110G-(TX) | T | 31.4/31.7 |
| D11 | 1790001250 | S.DIO | MA2S1110G-(TX) | T | 16.5/38.2 |
| D71 | 1750000381 | S.DIO | 1SS312 (TE85L,F) | T | 29.8/34.9 |
| D72 | 1750000381 | S.DIO | 1SS312 (TE85L,F) | T | 29.9/37.6 |
| X1 | 6050012210 | XTL | CR-772.OCVXO-148A | | |
| L1 | 6200003950 | S.COL | HF50ACC 322513-T | T | 38.8/43.7 |
| L2 | 6200003950 | S.COL | HF50ACC 322513-T | T | 35.8/43.7 |
| L10 | 6200003950 | S.COL | HF50ACC 322513-T | T | 94.7/30.6 |
| L20 | 6200005491 | S.COL | NLV32T-331J | T | 14.7/1.9 |
| L21 | 6200003261 | S.COL | NLV32T-101J | T | 6.9/11.2 |
| L22 | 6200003261 | S.COL | NLV32T-101J | T | 7.9/14.7 |
| L23 | 6200003041 | S.COL | NLV32T-R68J | T | 6.9/20.3 |
| L24 | 6200003051 | S.COL | NLV32T-R82J | T | 6.2/23.8 |
| L41 | 6200003261 | S.COL | NLV32T-101J | T | 15.3/13.7 |
| L42 | 6200003261 | S.COL | NLV32T-101J | T | 14.7/17.2 |
| L43 | 6200003041 | S.COL | NLV32T-R68J | T | 15.3/22.4 |
| L44 | 6200003051 | S.COL | NLV32T-R82J | T | 18.8/24.2 |
| L61 | 6150004170 | COL | LS-476 | | |
| L62 | 6150004170 | COL | LS-476 | | |
| L91 | 6200003950 | S.COL | HF50ACC 322513-T | T | 23.6/20.3 |
| L92 | 6200003950 | S.COL | HF50ACC 322513-T | T | 19.4/4.3 |
| R1 | 7030003440 | S.RES | ERJ3GEYJ 102 V (1 k) | T | 32.4/44.3 |
| R2 | 7030003440 | S.RES | ERJ3GEYJ 102 V (1 k) | T | 29.8/44.2 |
| R3 | 7030003440 | S.RES | ERJ3GEYJ 102 V (1 k) | T | 25.8/44.2 |
| R11 | 7030003200 | S.RES | ERJ3GEYJ 100 V (10) | T | 33.3/32.3 |
| R12 | 7030003200 | S.RES | ERJ3GEYJ 100 V (10) | T | 16.7/40.3 |
| R13 | 7030003440 | S.RES | ERJ3GEYJ 102 V (1 k) | T | 16.8/11.6 |
| R20 | 7030003240 | S.RES | ERJ3GEYJ 220 V (22) | T | 11.3/1.8 |
| R21 | 7030003560 | S.RES | ERJ3GEYJ 103 V (10 k) | T | 11.1/4.4 |
| R22 | 7030003370 | S.RES | ERJ3GEYJ 271 V (270) | T | 15.5/7.9 |
| R23 | 7030004040 | S.RES | ERJ3GEYJ 4R7 V (4.7) | T | 11.4/14 |
| R24 | 7030003370 | S.RES | ERJ3GEYJ 271 V (270) | T | 12.3/17.7 |
| R25 | 7030003500 | S.RES | ERJ3GEYJ 332 V (3.3 k) | T | 10.1/14.2 |
| R26 | 7030003480 | S.RES | ERJ3GEYJ 222 V (2.2 k) | T | 12.8/9.1 |
| R27 | 7030003360 | S.RES | ERJ3GEYJ 221 V (220) | T | 5.8/13.9 |
| R28 | 7030003440 | S.RES | ERJ3GEYJ 102 V (1 k) | T | 10.2/11.9 |
| R43 | 7030003240 | S.RES | ERJ3GEYJ 220 V (22) | T | 19.7/14.2 |
| R44 | 7030003370 | S.RES | ERJ3GEYJ 271 V (270) | T | 20.7/18.6 |
| R45 | 7030003500 | S.RES | ERJ3GEYJ 332 V (3.3 k) | T | 17.9/15.1 |
| R46 | 7030003480 | S.RES | ERJ3GEYJ 222 V (2.2 k) | T | 19.4/9.8 |
| R47 | 7030003290 | S.RES | ERJ3GEYJ 560 V (56) | T | 16.8/17.9 |
| R61 | 7030003240 | S.RES | ERJ3GEYJ 220 V (22) | T | 22.2/35.4 |
| R62 | 7030003560 | S.RES | ERJ3GEYJ 103 V (10 k) | T | 26.3/34.2 |
| R63 | 7030003380 | S.RES | ERJ3GEYJ 331 V (330) | T | 25.9/38 |
| R64 | 7030003280 | S.RES | ERJ3GEYJ 470 V (47) | T | 20.8/40.5 |
| R65 | 7030003400 | S.RES | ERJ3GEYJ 471 V (470) | T | 20/34.8 |
| R67 | 7030003560 | S.RES | ERJ3GEYJ 103 V (10 k) | T | 19.6/36.7 |
| R68 | 7030003550 | S.RES | ERJ3GEYJ 822 V (8.2 k) | T | 22.2/36.7 |
| R71 | 7030003340 | S.RES | ERJ3GEYJ 151 V (150) | T | 32.6/38.2 |
| R72 | 7030003270 | S.RES | ERJ3GEYJ 390 V (39) | T | 31.2/39.5 |
| R73 | 7030003340 | S.RES | ERJ3GEYJ 151 V (150) | T | 28.6/39.5 |
| R75 | 7030003280 | S.RES | ERJ3GEYJ 470 V (47) | T | 16.2/43.1 |
| R77 | 7030003320 | S.RES | ERJ3GEYJ 101 V (100) | T | 12.5/44.6 |
| R78 | 7030003470 | S.RES | ERJ3GEYJ 182 V (1.8 k) | T | 8/41 |
| R79 | 7030003480 | S.RES | ERJ3GEYJ 222 V (2.2 k) | T | 6.1/41.6 |
| R80 | 7030003360 | S.RES | ERJ3GEYJ 221 V (220) | T | 11.8/41 |
| R82 | 7030003280 | S.RES | ERJ3GEYJ 470 V (47) | T | 17.5/43.1 |
| R91 | 7030006091 | S.RES | ERA3YED 822V (8.2 k) | T | 19.5/7.1 |
| R92 | 7030005341 | S.RES | ERA3YED 332V (3.3 k) | T | 19.5/8.4 |
| R93 | 7030003560 | S.RES | ERJ3GEYJ 103 V (10 k) | T | 25.6/1.4 |
| R94 | 7030003540 | S.RES | ERJ3GEYJ 682 V (6.8 k) | T | 25.6/2.7 |
| R95 | 7030003320 | S.RES | ERJ3GEYJ 101 V (100) | T | 22.4/16.7 |
| R96 | 7030003440 | S.RES | ERJ3GEYJ 102 V (1 k) | T | 32/14.1 |
| R97 | 7030003440 | S.RES | ERJ3GEYJ 102 V (1 k) | T | 28.6/16.1 |
| R98 | 7030003640 | S.RES | ERJ3GEYJ 473 V (47 k) | T | 27.3/16.1 |
| R99 | 7030003480 | S.RES | ERJ3GEYJ 222 V (2.2 k) | T | 22.4/10.1 |
| R100 | 7030003640 | S.RES | ERJ3GEYJ 473 V (47 k) | T | 27.2/6.4 |
| R101 | 7030003360 | S.RES | ERJ3GEYJ 221 V (220) | T | 36.9/38.1 |
| R102 | 7030005981 | S.RES | ERA3YED 333V (33 k) | T | 32.4/6.7 |
| C1 | 4030006880 | S.CER | C1608 JB 1H 472K-T | T | 39.6/47.6 |
| C2 | 4030006880 | S.CER | C1608 JB 1H 472K-T | T | 31.1/44.3 |

## [OSC UNIT]

| REF NO. | ORDER NO. | DESCRIPTION | | M. | H/V LOCATION |
|---|---|---|---|---|---|
| C3 | 4030006880 | S.CER | C1608 JB 1H 472K-T | T | 33.7/44 |
| C4 | 4030006880 | S.CER | C1608 JB 1H 472K-T | T | 30.5/8.6 |
| C5 | 4510008550 | S.ELE | EEE1HA010SR | T | 30.6/2.6 |
| C6 | 4030006880 | S.CER | C1608 JB 1H 472K-T | T | 35/3.4 |
| C7 | 4510008550 | S.ELE | EEE1HA010SR | T | 38.7/2.6 |
| C8 | 4030011600 | S.CER | C1608 JB 1E 104K-T | T | 17.3/2.1 |
| C9 | 4030006880 | S.CER | C1608 JB 1H 472K-T | T | 27.1/43.1 |
| C10 | 4510008680 | S.ELE | EEE1EA220SP | T | 29.7/21.3 |
| C11 | 4030004760 | S.CER | C2012 JF 1H 104Z-T | T | 35.9/13 |
| C12 | 4030006880 | S.CER | C1608 JB 1H 472K-T | T | 39.2/12.8 |
| C13 | 4510008680 | S.ELE | EEE1EA220SP | T | 37.1/8.6 |
| C14 | 4030006880 | S.CER | C1608 JB 1H 472K-T | T | 94.7/33.9 |
| C15 | 4030011600 | S.CER | C1608 JB 1E 104K-T | T | 39.2/14.1 |
| C16 | 4030011600 | S.CER | C1608 JB 1E 104K-T | T | 29.6/32.3 |
| C17 | 4030011600 | S.CER | C1608 JB 1E 104K-T | T | 19.4/41.8 |
| C18 | 4030011600 | S.CER | C1608 JB 1E 104K-T | T | 17.8/38.3 |
| C19 | 4030011600 | S.CER | C1608 JB 1E 104K-T | T | 31.5/33 |
| C20 | 4030011600 | S.CER | C1608 JB 1E 104K-T | T | 13.3/5.2 |
| C21 | 4030011600 | S.CER | C1608 JB 1E 104K-T | T | 11.3/3.1 |
| C22 | 4030011600 | S.CER | C1608 JB 1E 104K-T | T | 15/11 |
| C23 | 4030011600 | S.CER | C1608 JB 1E 104K-T | T | 11.9/15.8 |
| C24 | 4030011600 | S.CER | C1608 JB 1E 104K-T | T | 12.7/14 |
| C25 | 4030011600 | S.CER | C1608 JB 1E 104K-T | T | 10.2/19.8 |
| C26 | 4030017800 | S.CER | C1608 CH 1H 561J-T | T | 10.2/21.1 |
| C27 | 4030007120 | S.CER | C1608 CH 1H 820J-T | T | 7.7/18.2 |
| C28 | 4030011340 | S.CER | C1608 CH 1H 471J-T | T | 8.9/22.5 |
| C29 | 4030011330 | S.CER | C1608 CH 1H 391J-T | T | 10.2/23.8 |
| C30 | 4030007050 | S.CER | C1608 CH 1H 220J-T | T | 8.4/24.5 |
| C31 | 4030017800 | S.CER | C1608 CH 1H 561J-T | T | 10.2/25.1 |
| C32 | 4030011600 | S.CER | C1608 JB 1E 104K-T | T | 10.8/9.2 |
| C33 | 4030011600 | S.CER | C1608 JB 1E 104K-T | T | 9.5/10.1 |
| C42 | 4030011600 | S.CER | C1608 JB 1E 104K-T | T | 21.6/12.7 |
| C43 | 4030011600 | S.CER | C1608 JB 1E 104K-T | T | 20.1/16.8 |
| C44 | 4030011600 | S.CER | C1608 JB 1E 104K-T | T | 19.9/15.5 |
| C45 | 4030011600 | S.CER | C1608 JB 1E 104K-T | T | 13.2/20.6 |
| C46 | 4030017800 | S.CER | C1608 CH 1H 561J-T | T | 15/19.8 |
| C47 | 4030007120 | S.CER | C1608 CH 1H 820J-T | T | 13.2/23.2 |
| C48 | 4030011340 | S.CER | C1608 CH 1H 471J-T | T | 17.5/21.5 |
| C49 | 4030011330 | S.CER | C1608 CH 1H 391J-T | T | 18.8/21.5 |
| C50 | 4030007050 | S.CER | C1608 CH 1H 220J-T | T | 20.6/22.1 |
| C51 | 4030017800 | S.CER | C1608 CH 1H 561J-T | T | 21.7/24.4 |
| C52 | 4030011600 | S.CER | C1608 JB 1E 104K-T | T | 17.6/8.8 |
| C53 | 4030011600 | S.CER | C1608 JB 1E 104K-T | T | 16.3/9.7 |
| C61 | 4030011600 | S.CER | C1608 JB 1E 104K-T | T | 26.3/32.9 |
| C62 | 4030011600 | S.CER | C1608 JB 1E 104K-T | T | 24.1/36.1 |
| C63 | 4030011600 | S.CER | C1608 JB 1E 104K-T | T | 25.9/39.3 |
| C64 | 4030011600 | S.CER | C1608 JB 1E 104K-T | T | 22.7/34.1 |
| C66 | 4030007010 | S.CER | C1608 CH 1H 100D-T | T | 12.8/25.1 |
| C67 | 4030011600 | S.CER | C1608 JB 1E 104K-T | T | 17/35.4 |
| C71 | 4030006880 | S.CER | C1608 JB 1H 472K-T | T | 33.8/39.5 |
| C72 | 4030006880 | S.CER | C1608 JB 1H 472K-T | T | 14.4/45.4 |
| C73 | 4030006880 | S.CER | C1608 JB 1H 472K-T | T | 6.1/40.3 |
| C74 | 4030006880 | S.CER | C1608 JB 1H 472K-T | T | 10/43.2 |
| C75 | 4030006880 | S.CER | C1608 JB 1H 472K-T | T | 13.1/40.9 |
| C76 | 4030006880 | S.CER | C1608 JB 1H 472K-T | T | 19.4/45.4 |
| C77 | 4030011600 | S.CER | C1608 JB 1E 104K-T | T | 10.7/44.6 |
| C91 | 4030006880 | S.CER | C1608 JB 1H 472K-T | T | 25.5/16.4 |
| C92 | 4030006880 | S.CER | C1608 JB 1H 472K-T | T | 17.3/4.7 |
| C93 | 4030006880 | S.CER | C1608 JB 1H 472K-T | T | 22.1/2.7 |
| C94 | 4030006880 | S.CER | C1608 JB 1H 472K-T | T | 27.9/8.6 |
| C101 | 4550006480 | S.TAN | TEESVA 1C 475M8R | T | 40/38.9 |
| RL10 | 6330001750 | RLY | FTR-B4CA012Z | | |
| RL11 | 6330001750 | RLY | FTR-B4CA012Z | | |
| J2 | 6510019971 | S.CNR | 52808-1071 | T | 30.5/48.8 |
| J71 | 6510007020 | CNR | TMP-J01X-V6 | | |
| J72 | 6510007020 | CNR | TMP-J01X-V6 | | |
| J73 | 6510007020 | CNR | TMP-J01X-V6 | | |

M.=Mounted side (T: Mounted on the Top side, B: Mounted on the Bottom side)
S.=Surface mount

## [DIGISEL UNIT]

| REF NO. | ORDER NO. | DESCRIPTION | | M. | H/V LOCATION |
|---|---|---|---|---|---|
| IC1 | 1130014370 | S.IC | CAT24C256XI | B | 18.9/51.9 |
| IC4 | 1130011510 | S.IC | BU2099FV-E2 | T | 29.9/55.8 |
| IC5 | 1130011510 | S.IC | BU2099FV-E2 | T | 18.5/55.8 |
| IC501 | 1130014370 | S.IC | CAT24C256XI | B | 17.5/26.4 |
| IC504 | 1130011510 | S.IC | BU2099FV-E2 | T | 28.3/29.2 |
| IC505 | 1130011510 | S.IC | BU2099FV-E2 | T | 18.1/29.3 |
| Q201 | 1530003851 | S.TR | 2SC5551A-F-E | T | 48.5/52.8 |
| Q701 | 1530003851 | S.TR | 2SC5551A-F-E | T | 49.7/21.3 |
| D21 | 1750000550 | S.DIO | 1SS355 TE-17 | B | 28.5/45.9 |
| D51 | 1750000550 | S.DIO | 1SS355 TE-17 | B | 60.7/57.2 |
| D52 | 1750000550 | S.DIO | 1SS355 TE-17 | B | 61.6/44.8 |
| D53 | 1750000550 | S.DIO | 1SS355 TE-17 | T | 53.1/59.2 |
| D54 | 1750000550 | S.DIO | 1SS355 TE-17 | B | 90.2/68.2 |
| D55 | 1750000550 | S.DIO | 1SS355 TE-17 | B | 69.5/68.4 |
| D56 | 1750000550 | S.DIO | 1SS355 TE-17 | B | 67.3/55.1 |
| D57 | 1750000550 | S.DIO | 1SS355 TE-17 | T | 66/48.7 |
| D58 | 1750000550 | S.DIO | 1SS355 TE-17 | B | 114.3/50.2 |
| D59 | 1750000550 | S.DIO | 1SS355 TE-17 | B | 90.5/51 |
| D60 | 1750000550 | S.DIO | 1SS355 TE-17 | B | 90.5/54.4 |
| D61 | 1750000550 | S.DIO | 1SS355 TE-17 | B | 114.3/53.5 |
| D62 | 1750000550 | S.DIO | 1SS355 TE-17 | B | 138.2/50.2 |
| D63 | 1750000550 | S.DIO | 1SS355 TE-17 | B | 138.2/53.7 |
| D64 | 1750000550 | S.DIO | 1SS355 TE-17 | B | 162.1/50.1 |
| D65 | 1750000550 | S.DIO | 1SS355 TE-17 | B | 162.1/53.7 |
| D66 | 1750000550 | S.DIO | 1SS355 TE-17 | B | 180.9/47.7 |
| D67 | 1750000550 | S.DIO | 1SS355 TE-17 | B | 114.3/57.2 |
| D68 | 1750000550 | S.DIO | 1SS355 TE-17 | T | 85.8/64.1 |
| D69 | 1750000550 | S.DIO | 1SS355 TE-17 | B | 183.4/63 |
| D70 | 1750000550 | S.DIO | 1SS355 TE-17 | B | 162.1/61.3 |
| D71 | 1750000550 | S.DIO | 1SS355 TE-17 | B | 162.1/57.5 |
| D72 | 1750000550 | S.DIO | 1SS355 TE-17 | B | 138.2/61.3 |
| D73 | 1750000550 | S.DIO | 1SS355 TE-17 | B | 138.2/57.5 |
| D74 | 1750000550 | S.DIO | 1SS355 TE-17 | B | 114.3/61.4 |
| D75 | 1750000550 | S.DIO | 1SS355 TE-17 | B | 90.5/59.1 |
| D201 | 1710001240 | DIO | L204BBB | | |
| D202 | 1710001240 | DIO | L204BBB | | |
| D203 | 1750000550 | S.DIO | 1SS355 TE-17 | B | 48.3/73.3 |
| D204 | 1750000550 | S.DIO | 1SS355 TE-17 | B | 46.1/73.3 |
| D205 | 1750000550 | S.DIO | 1SS355 TE-17 | B | 44.8/69.7 |
| D521 | 1750000550 | S.DIO | 1SS355 TE-17 | B | 25/35.2 |
| D551 | 1750000550 | S.DIO | 1SS355 TE-17 | B | 63.7/9.2 |
| D552 | 1750000550 | S.DIO | 1SS355 TE-17 | B | 61.7/23 |
| D553 | 1750000550 | S.DIO | 1SS355 TE-17 | B | 58/8.5 |
| D554 | 1750000550 | S.DIO | 1SS355 TE-17 | B | 91/12.8 |
| D555 | 1750000550 | S.DIO | 1SS355 TE-17 | T | 68.6/11.7 |
| D556 | 1750000550 | S.DIO | 1SS355 TE-17 | B | 67.2/24.9 |
| D557 | 1750000550 | S.DIO | 1SS355 TE-17 | B | 70.2/36.4 |
| D558 | 1750000550 | S.DIO | 1SS355 TE-17 | B | 114.3/27.1 |
| D559 | 1750000550 | S.DIO | 1SS355 TE-17 | B | 90.6/26.8 |
| D560 | 1750000550 | S.DIO | 1SS355 TE-17 | B | 90.6/30.3 |
| D561 | 1750000550 | S.DIO | 1SS355 TE-17 | B | 114.3/30.5 |
| D562 | 1750000550 | S.DIO | 1SS355 TE-17 | B | 138.2/27.1 |
| D563 | 1750000550 | S.DIO | 1SS355 TE-17 | B | 138.2/30.5 |
| D564 | 1750000550 | S.DIO | 1SS355 TE-17 | B | 162.1/27.1 |
| D565 | 1750000550 | S.DIO | 1SS355 TE-17 | B | 162.1/30.6 |
| D566 | 1750000550 | S.DIO | 1SS355 TE-17 | B | 182.5/33.5 |
| D567 | 1750000550 | S.DIO | 1SS355 TE-17 | B | 114.3/19.6 |
| D568 | 1750000550 | S.DIO | 1SS355 TE-17 | B | 90.7/19.6 |
| D569 | 1750000550 | S.DIO | 1SS355 TE-17 | B | 183.6/17.1 |
| D570 | 1750000550 | S.DIO | 1SS355 TE-17 | B | 162.1/19.7 |
| D571 | 1750000550 | S.DIO | 1SS355 TE-17 | B | 162.1/23.5 |
| D572 | 1750000550 | S.DIO | 1SS355 TE-17 | B | 138.2/23.5 |
| D573 | 1750000550 | S.DIO | 1SS355 TE-17 | B | 138.2/19.6 |
| D574 | 1750000550 | S.DIO | 1SS355 TE-17 | B | 114.3/23.4 |
| D575 | 1750000550 | S.DIO | 1SS355 TE-17 | B | 90.7/22.9 |
| D701 | 1710001240 | DIO | L204BBB | | |
| D702 | 1710001240 | DIO | L204BBB | | |
| D703 | 1750000550 | S.DIO | 1SS355 TE-17 | B | 47/9 |
| D704 | 1750000550 | S.DIO | 1SS355 TE-17 | B | 44.9/9 |
| D705 | 1750000550 | S.DIO | 1SS355 TE-17 | T | 51.8/34.3 |
| L1 | 6200003261 | S.COL | NLV32T-101J | B | 4.5/52 |
| L2 | 6200003950 | S.COL | HF50ACC 322513-T | B | 4.7/40 |
| L3 | 6200003261 | S.COL | NLV32T-101J | B | 4.5/48 |
| L4 | 6200003261 | S.COL | NLV32T-101J | B | 4.5/44 |
| L101 | 6140003980 | COL | LR-476 | | |
| L102 | 6140003990 | COL | LR-477 | | |
| L103 | 6140004001 | COL | LR-478A | | |
| L104 | 6140004010 | COL | LR-479 | | |
| L105 | 6140004020 | COL | LR-480 | | |
| L106 | 6140004030 | COL | LR-481 | | |
| L107 | 6110003930 | COL | LA-595 | | |
| L201 | 6180000920 | COL | LAL 03NA 221K | | |
| L203 | 6140003940 | COL | LR-493 | | |
| L503 | 6200003261 | S.COL | NLV32T-101J | B | 4.5/36 |
| L504 | 6200003261 | S.COL | NLV32T-101J | B | 4.5/32 |
| L601 | 6140003980 | COL | LR-476 | | |
| L602 | 6140003990 | COL | LR-477 | | |
| L603 | 6140004001 | COL | LR-478A | | |
| L604 | 6140004010 | COL | LR-479 | | |
| L605 | 6140004020 | COL | LR-480 | | |
| L606 | 6140004030 | COL | LR-481 | | |
| L607 | 6110003930 | COL | LA-595 | | |
| L701 | 6180000920 | COL | LAL 03NA 221K | | |
| L703 | 6140003940 | COL | LR-493 | | |
| R1 | 7030003680 | S.RES | ERJ3GEYJ 104 V (100 k) | B | 17.3/60.8 |
| R2 | 7030003560 | S.RES | ERJ3GEYJ 103 V (10 k) | B | 12.6/54.5 |

## [DIGISEL UNIT]

| REF NO. | ORDER NO. | DESCRIPTION | | M. | H/V LOCATION |
|---|---|---|---|---|---|
| R3 | 7030003560 | S.RES | ERJ3GEYJ 103 V (10 k) | T | 26.1/51.6 |
| R4 | 7030003440 | S.RES | ERJ3GEYJ 102 V (1 k) | T | 14.3/47.4 |
| R5 | 7030003440 | S.RES | ERJ3GEYJ 102 V (1 k) | T | 15.7/44.8 |
| R6 | 7030003440 | S.RES | ERJ3GEYJ 102 V (1 k) | T | 15.1/46.1 |
| R7 | 7030003440 | S.RES | ERJ3GEYJ 102 V (1 k) | T | 4/52.9 |
| R8 | 7030003440 | S.RES | ERJ3GEYJ 102 V (1 k) | T | 13.3/51.8 |
| R9 | 7030003360 | S.RES | ERJ3GEYJ 221 V (220) | B | 32/45.9 |
| R10 | 7030003360 | S.RES | ERJ3GEYJ 221 V (220) | T | 34.6/60 |
| R35 | 7030003360 | S.RES | ERJ3GEYJ 221 V (220) | T | 27.9/62.4 |
| R36 | 7030003360 | S.RES | ERJ3GEYJ 221 V (220) | T | 28.6/65.8 |
| R37 | 7030003360 | S.RES | ERJ3GEYJ 221 V (220) | T | 29.3/62.4 |
| R38 | 7030003360 | S.RES | ERJ3GEYJ 221 V (220) | T | 30/65.8 |
| R39 | 7030003360 | S.RES | ERJ3GEYJ 221 V (220) | T | 30.7/62.4 |
| R40 | 7030003360 | S.RES | ERJ3GEYJ 221 V (220) | T | 26.5/62.4 |
| R41 | 7030003360 | S.RES | ERJ3GEYJ 221 V (220) | T | 27.2/65.8 |
| R42 | 7030003360 | S.RES | ERJ3GEYJ 221 V (220) | T | 25.8/65.8 |
| R43 | 7030003360 | S.RES | ERJ3GEYJ 221 V (220) | T | 25.1/62.4 |
| R44 | 7030003360 | S.RES | ERJ3GEYJ 221 V (220) | T | 24.4/65.8 |
| R45 | 7030003360 | S.RES | ERJ3GEYJ 221 V (220) | T | 23.7/62.4 |
| R46 | 7030003360 | S.RES | ERJ3GEYJ 221 V (220) | T | 23/65.8 |
| R47 | 7030003360 | S.RES | ERJ3GEYJ 221 V (220) | T | 21.2/62.4 |
| R48 | 7030003360 | S.RES | ERJ3GEYJ 221 V (220) | T | 19.1/65.8 |
| R49 | 7030003360 | S.RES | ERJ3GEYJ 221 V (220) | T | 18.4/62.4 |
| R50 | 7030003360 | S.RES | ERJ3GEYJ 221 V (220) | T | 19.8/62.4 |
| R51 | 7030003360 | S.RES | ERJ3GEYJ 221 V (220) | T | 20.5/65.8 |
| R52 | 7030003360 | S.RES | ERJ3GEYJ 221 V (220) | T | 15.6/62.4 |
| R53 | 7030003360 | S.RES | ERJ3GEYJ 221 V (220) | T | 14.9/65.8 |
| R54 | 7030003360 | S.RES | ERJ3GEYJ 221 V (220) | T | 14.2/62.4 |
| R55 | 7030003360 | S.RES | ERJ3GEYJ 221 V (220) | T | 16.3/65.8 |
| R56 | 7030003360 | S.RES | ERJ3GEYJ 221 V (220) | T | 17/62.4 |
| R57 | 7030003360 | S.RES | ERJ3GEYJ 221 V (220) | T | 17.7/65.8 |
| R58 | 7030003360 | S.RES | ERJ3GEYJ 221 V (220) | T | 20.9/46.4 |
| R59 | 7030003440 | S.RES | ERJ3GEYJ 102 V (1 k) | T | 14.9/49.7 |
| R100 | 7030000010 | S.RES | MCR10EZHJ JPW (000) | B | 26/47.3 |
| R104 | 7030003560 | S.RES | ERJ3GEYJ 103 V (10 k) | B | 145.1/64.1 |
| R105 | 7030003560 | S.RES | ERJ3GEYJ 103 V (10 k) | B | 131.1/62.7 |
| R201 | 7030000380 | S.RES | MCR10EZHJ 1 k | B | 49.4/55.6 |
| R202 | 7030000290 | S.RES | MCR10EZHJ 180 (181) | B | 49.4/51.8 |
| R203 | 7030000220 | S.RES | MCR10EZHJ 47 (470) | B | 49.4/53.7 |
| R204 | 7030003360 | S.RES | ERJ3GEYJ 221 V (220) | B | 48.2/69.7 |
| R205 | 7030003350 | S.RES | ERJ3GEYJ 181 V (180) | T | 54.5/46.5 |
| R206 | 7030003370 | S.RES | ERJ3GEYJ 271 V (270) | B | 49.4/48.7 |
| R207 | 7030003560 | S.RES | ERJ3GEYJ 103 V (10 k) | T | 57.6/48.7 |
| R208 | 7030000200 | S.RES | MCR10EZHJ 33 (330) | B | 45.4/56.9 |
| R209 | 7030003240 | S.RES | ERJ3GEYJ 220 V (22) | T | 44.2/53.9 |
| R210 | 7030003370 | S.RES | ERJ3GEYJ 271 V (270) | B | 45.2/49.5 |
| R211 | 7030003370 | S.RES | ERJ3GEYJ 271 V (270) | B | 45.2/50.8 |
| R213 | 7030000220 | S.RES | MCR10EZHJ 47 (470) | B | 38.1/55.9 |
| R214 | 7030003460 | S.RES | ERJ3GEYJ 152 V (1.5 k) | B | 51.6/60 |
| R215 | 7030003460 | S.RES | ERJ3GEYJ 152 V (1.5 k) | B | 52.4/58 |
| R216 | 7030003680 | S.RES | ERJ3GEYJ 104 V (100 k) | B | 17.3/66.4 |
| R501 | 7030003680 | S.RES | ERJ3GEYJ 104 V (100 k) | B | 14.5/21.2 |
| R502 | 7030003560 | S.RES | ERJ3GEYJ 103 V (10 k) | B | 25.7/25.3 |
| R503 | 7030003560 | S.RES | ERJ3GEYJ 103 V (10 k) | B | 24.4/25.3 |
| R504 | 7030003440 | S.RES | ERJ3GEYJ 102 V (1 k) | B | 9.7/44.5 |
| R505 | 7030003440 | S.RES | ERJ3GEYJ 102 V (1 k) | T | 9.3/42.5 |
| R506 | 7030003440 | S.RES | ERJ3GEYJ 102 V (1 k) | T | 3.7/28.1 |
| R507 | 7030003440 | S.RES | ERJ3GEYJ 102 V (1 k) | B | 4.4/28 |
| R508 | 7030003440 | S.RES | ERJ3GEYJ 102 V (1 k) | T | 12.9/30.8 |
| R509 | 7030003360 | S.RES | ERJ3GEYJ 221 V (220) | T | 31.1/34.8 |
| R510 | 7030003360 | S.RES | ERJ3GEYJ 221 V (220) | T | 32.2/21.9 |
| R535 | 7030003360 | S.RES | ERJ3GEYJ 221 V (220) | T | 26.4/21.9 |
| R536 | 7030003360 | S.RES | ERJ3GEYJ 221 V (220) | T | 25.7/19 |
| R537 | 7030003360 | S.RES | ERJ3GEYJ 221 V (220) | T | 23.6/21.9 |
| R538 | 7030003360 | S.RES | ERJ3GEYJ 221 V (220) | T | 24.3/19 |
| R539 | 7030003360 | S.RES | ERJ3GEYJ 221 V (220) | T | 25/21.8 |
| R540 | 7030003360 | S.RES | ERJ3GEYJ 221 V (220) | T | 30.1/19 |
| R541 | 7030003360 | S.RES | ERJ3GEYJ 221 V (220) | T | 29.4/21.9 |
| R542 | 7030003360 | S.RES | ERJ3GEYJ 221 V (220) | T | 28.7/19 |
| R543 | 7030003360 | S.RES | ERJ3GEYJ 221 V (220) | T | 27.9/21.9 |
| R544 | 7030003360 | S.RES | ERJ3GEYJ 221 V (220) | T | 27.2/19 |
| R545 | 7030003360 | S.RES | ERJ3GEYJ 221 V (220) | T | 30.8/21.9 |
| R546 | 7030003360 | S.RES | ERJ3GEYJ 221 V (220) | T | 31.5/19 |
| R547 | 7030003360 | S.RES | ERJ3GEYJ 221 V (220) | T | 18/21.9 |
| R548 | 7030003360 | S.RES | ERJ3GEYJ 221 V (220) | T | 17.3/19.1 |
| R549 | 7030003360 | S.RES | ERJ3GEYJ 221 V (220) | T | 15.2/21.9 |
| R550 | 7030003360 | S.RES | ERJ3GEYJ 221 V (220) | T | 16.6/21.9 |
| R551 | 7030003360 | S.RES | ERJ3GEYJ 221 V (220) | T | 15.9/19.1 |
| R552 | 7030003360 | S.RES | ERJ3GEYJ 221 V (220) | T | 20.1/19.2 |
| R553 | 7030003360 | S.RES | ERJ3GEYJ 221 V (220) | T | 19.4/21.9 |
| R554 | 7030003360 | S.RES | ERJ3GEYJ 221 V (220) | T | 18.7/19.1 |
| R555 | 7030003360 | S.RES | ERJ3GEYJ 221 V (220) | T | 20.9/21.9 |
| R556 | 7030003360 | S.RES | ERJ3GEYJ 221 V (220) | T | 21.6/19.2 |
| R557 | 7030003360 | S.RES | ERJ3GEYJ 221 V (220) | T | 22.3/21.9 |
| R558 | 7030003360 | S.RES | ERJ3GEYJ 221 V (220) | T | 23.5/34.2 |
| R600 | 7030000010 | S.RES | MCR10EZHJ JPW (000) | B | 30.9/33.9 |
| R604 | 7030003560 | S.RES | ERJ3GEYJ 103 V (10 k) | B | 145.1/17.1 |
| R605 | 7030003560 | S.RES | ERJ3GEYJ 103 V (10 k) | B | 129.1/17.1 |
| R701 | 7030000380 | S.RES | MCR10EZHJ 1 k | T | 53.2/20.4 |
| R702 | 7030000290 | S.RES | MCR10EZHJ 180 (181) | T | 51.6/15.9 |
| R703 | 7030000220 | S.RES | MCR10EZHJ 47 (470) | T | 51.6/13.8 |
| R704 | 7030003360 | S.RES | ERJ3GEYJ 221 V (220) | T | 52.9/31.9 |
| R705 | 7030003350 | S.RES | ERJ3GEYJ 181 V (180) | B | 49.4/9 |
| R706 | 7030003370 | S.RES | ERJ3GEYJ 271 V (270) | B | 42.4/10.1 |
| R707 | 7030003560 | S.RES | ERJ3GEYJ 103 V (10 k) | T | 51.3/12.2 |
| R708 | 7030000200 | S.RES | MCR10EZHJ 33 (330) | T | 43.8/25.6 |
| R709 | 7030003240 | S.RES | ERJ3GEYJ 220 V (22) | T | 46.5/19.8 |
| R710 | 7030003370 | S.RES | ERJ3GEYJ 271 V (270) | B | 45.6/19.4 |
| R711 | 7030003370 | S.RES | ERJ3GEYJ 271 V (270) | B | 45.6/21 |
| R713 | 7030000220 | S.RES | MCR10EZHJ 47 (470) | B | 38.8/27.4 |
| R714 | 7030003460 | S.RES | ERJ3GEYJ 152 V (1.5 k) | T | 53.5/29.2 |
| R715 | 7030003460 | S.RES | ERJ3GEYJ 152 V (1.5 k) | T | 51.6/30 |
| R716 | 7030003680 | S.RES | ERJ3GEYJ 104 V (100 k) | B | 14.5/15.5 |

M.=Mounted side (T: Mounted on the Top side, B: Mounted on the Bottom side)
S.=Surface mount

## [DIGISEL UNIT]

| REF NO. | ORDER NO. | DESCRIPTION | M. | H/V LOCATION |
|---|---|---|---|---|
| C1 | 4030011600 | S.CER C1608 JB 1E 104K-T | B | 15.2/55.4 |
| C2 | 4030011600 | S.CER C1608 JB 1E 104K-T | T | 7.9/31.8 |
| C4 | 4030011600 | S.CER C1608 JB 1E 104K-T | T | 31.8/50.7 |
| C5 | 4030011600 | S.CER C1608 JB 1E 104K-T | T | 16/51.6 |
| C21 | 4030006880 | S.CER C1608 JB 1H 472K-T | B | 30.4/45.9 |
| C35 | 4030006880 | S.CER C1608 JB 1H 472K-T | T | 32.1/65.3 |
| C51 | 4030006880 | S.CER C1608 JB 1H 472K-T | B | 64.8/57.2 |
| C52 | 4030006880 | S.CER C1608 JB 1H 472K-T | T | 57.6/45.8 |
| C53 | 4030006880 | S.CER C1608 JB 1H 472K-T | T | 51.5/59.2 |
| C54 | 4030006880 | S.CER C1608 JB 1H 472K-T | T | 87.3/72.3 |
| C55 | 4030006880 | S.CER C1608 JB 1H 472K-T | B | 67.1/63.5 |
| C56 | 4030006880 | S.CER C1608 JB 1H 472K-T | T | 66.5/54.9 |
| C57 | 4030006880 | S.CER C1608 JB 1H 472K-T | B | 66.2/45.6 |
| C58 | 4030006880 | S.CER C1608 JB 1H 472K-T | T | 114.3/50.4 |
| C59 | 4030006880 | S.CER C1608 JB 1H 472K-T | T | 90.4/51.4 |
| C60 | 4030006880 | S.CER C1608 JB 1H 472K-T | T | 90.4/54.4 |
| C61 | 4030006880 | S.CER C1608 JB 1H 472K-T | T | 114.3/53.7 |
| C62 | 4030006880 | S.CER C1608 JB 1H 472K-T | T | 138.2/51.1 |
| C63 | 4030006880 | S.CER C1608 JB 1H 472K-T | T | 138.2/54.4 |
| C64 | 4030006880 | S.CER C1608 JB 1H 472K-T | T | 162.1/50.8 |
| C65 | 4030006880 | S.CER C1608 JB 1H 472K-T | T | 162.1/53.9 |
| C66 | 4030006880 | S.CER C1608 JB 1H 472K-T | B | 182.5/47.7 |
| C67 | 4030006880 | S.CER C1608 JB 1H 472K-T | T | 114.3/57.2 |
| C68 | 4030006880 | S.CER C1608 JB 1H 472K-T | T | 88.3/63 |
| C69 | 4030006880 | S.CER C1608 JB 1H 472K-T | B | 183.7/64.8 |
| C70 | 4030006880 | S.CER C1608 JB 1H 472K-T | T | 162.1/60.2 |
| C71 | 4030006880 | S.CER C1608 JB 1H 472K-T | T | 162.1/57.3 |
| C72 | 4030006880 | S.CER C1608 JB 1H 472K-T | T | 138.2/59.5 |
| C73 | 4030006880 | S.CER C1608 JB 1H 472K-T | T | 135.8/63 |
| C74 | 4030006880 | S.CER C1608 JB 1H 472K-T | T | 114.3/60.4 |
| C75 | 4030006880 | S.CER C1608 JB 1H 472K-T | T | 90.5/59.6 |
| C101 | 4030011340 | S.CER C1608 CH 1H 471J-T | T | 68.2/68.4 |
| C102 | 4030011280 | S.CER C1608 CH 1H 271J-T | T | 59.5/69.2 |
| C103 | 4030011280 | S.CER C1608 CH 1H 271J-T | T | 60.5/56.7 |
| C104 | 4030007130 | S.CER C1608 CH 1H 101J-T | T | 57.7/52.7 |
| C105 | 4030006940 | S.CER C1608 CH 1H 030C-T | B | 65.7/51.9 |
| C106 | 4030007150 | S.CER C1608 CH 1H 151J-T | B | 56.4/70.2 |
| C107 | 4030007150 | S.CER C1608 CH 1H 151J-T | B | 60.3/70.6 |
| C108 | 4030007150 | S.CER C1608 CH 1H 151J-T | B | 62.4/70.6 |
| C109 | 4030007150 | S.CER C1608 CH 1H 151J-T | B | 56.4/68.8 |
| C110 | 4030009520 | S.CER C1608 CH 1H 020B-T | T | 77.2/69.1 |
| C111 | 4030009550 | S.CER C1608 CH 1H 2R5B-T | T | 77.2/67.8 |
| C113 | 4030007000 | S.CER C1608 CH 1H 090D-T | T | 73.7/58.9 |
| C114 | 4030007040 | S.CER C1608 CH 1H 180J-T | T | 71.7/59.5 |
| C115 | 4030007040 | S.CER C1608 CH 1H 180J-T | T | 70.4/59.5 |
| C116 | 4030007040 | S.CER C1608 CH 1H 180J-T | T | 69.1/59.5 |
| C117 | 4030007070 | S.CER C1608 CH 1H 330J-T | T | 77.2/70.4 |
| C118 | 4030007090 | S.CER C1608 CH 1H 470J-T | B | 76.7/59.8 |
| C119 | 4030007040 | S.CER C1608 CH 1H 180J-T | B | 66.1/48.1 |
| C120 | 4030007040 | S.CER C1608 CH 1H 180J-T | B | 66.1/49.8 |
| C121 | 4030007040 | S.CER C1608 CH 1H 180J-T | B | 74.4/59.7 |
| C122 | 4030007000 | S.CER C1608 CH 1H 090D-T | B | 74.3/70.3 |
| C124 | 4030009520 | S.CER C1608 CH 1H 020B-T | B | 77.4/68.9 |
| C125 | 4030009550 | S.CER C1608 CH 1H 2R5B-T | B | 76.1/68.9 |
| C126 | 4030008360 | S.CER C1608 UJ 1H 101J-T | B | 124.5/63.3 |
| C128 | 4030009500 | S.CER C1608 CH 1H 0R5B-T | B | 107.2/55.4 |
| C129 | 4030009510 | S.CER C1608 CH 1H 010B-T | B | 83.2/55.8 |
| C130 | 4030009520 | S.CER C1608 CH 1H 020B-T | B | 97.6/55.5 |
| C131 | 4030009910 | S.CER C1608 CH 1H 040B-T | B | 121.5/55.6 |
| C132 | 4030006990 | S.CER C1608 CH 1H 080D-T | B | 131/55.6 |
| C133 | 4030007040 | S.CER C1608 CH 1H 180J-T | B | 145.4/55.7 |
| C134 | 4030008750 | S.CER C1608 CH 1H 360J-T | B | 154.9/55.7 |
| C135 | 4030007110 | S.CER C1608 CH 1H 680J-T | B | 169.3/55.7 |
| C136 | 4030007140 | S.CER C1608 CH 1H 121J-T | B | 178.8/55.7 |
| C137 | 4030007140 | S.CER C1608 CH 1H 121J-T | B | 107.4/63.8 |
| C138 | 4030007130 | S.CER C1608 CH 1H 101J-T | B | 107.4/62.5 |
| C139 | 4030007160 | S.CER C1608 CH 1H 181J-T | B | 83.6/62.7 |
| C140 | 4030007160 | S.CER C1608 CH 1H 181J-T | B | 83.6/64.5 |
| C141 | 4030008330 | S.CER C1608 UJ 1H 560J-T | B | 177.2/63.2 |
| C142 | 4030008330 | S.CER C1608 UJ 1H 560J-T | B | 169.3/63.2 |
| C143 | 4030007090 | S.CER C1608 CH 1H 470J-T | B | 155.2/63.2 |
| C201 | 4030011600 | S.CER C1608 JB 1E 104K-T | B | 49.1/57.2 |
| C202 | 4030006900 | S.CER C1608 JB 1H 103K-T | T | 57.7/55.4 |
| C203 | 4030011600 | S.CER C1608 JB 1E 104K-T | B | 50.4/46.3 |
| C204 | 4030011600 | S.CER C1608 JB 1E 104K-T | B | 53.2/45.4 |
| C205 | 4030011600 | S.CER C1608 JB 1E 104K-T | B | 43.4/59.6 |
| C206 | 4030011600 | S.CER C1608 JB 1E 104K-T | B | 44.4/54.6 |
| C207 | 4030006880 | S.CER C1608 JB 1H 472K-T | B | 41.1/59.6 |
| C208 | 4030007010 | S.CER C1608 CH 1H 100D-T | T | 45/56.1 |
| C209 | 4030006880 | S.CER C1608 JB 1H 472K-T | B | 38.1/59.6 |
| C210 | 4030006900 | S.CER C1608 JB 1H 103K-T | B | 45.2/52.1 |
| C211 | 4030009000 | S.CER C2012 JB 1C 224K-T | B | 45.6/47.9 |
| C212 | 4030006880 | S.CER C1608 JB 1H 472K-T | B | 52.4/62 |
| C213 | 4030006880 | S.CER C1608 JB 1H 472K-T | T | 54.5/45.1 |
| C214 | 4030006880 | S.CER C1608 JB 1H 472K-T | B | 48.5/46.3 |
| C215 | 4030006880 | S.CER C1608 JB 1H 472K-T | T | 43.8/68.4 |
| C501 | 4030011600 | S.CER C1608 JB 1E 104K-T | B | 27/25.3 |
| C504 | 4030011600 | S.CER C1608 JB 1E 104K-T | T | 30.8/33.4 |
| C505 | 4030011600 | S.CER C1608 JB 1E 104K-T | T | 19.5/33.7 |
| C521 | 4030006880 | S.CER C1608 JB 1H 472K-T | B | 28/35 |
| C535 | 4030006880 | S.CER C1608 JB 1H 472K-T | T | 33.5/21.9 |
| C551 | 4030006880 | S.CER C1608 JB 1H 472K-T | B | 63.6/10.9 |
| C552 | 4030006880 | S.CER C1608 JB 1H 472K-T | T | 61.5/22.9 |
| C553 | 4030006880 | S.CER C1608 JB 1H 472K-T | B | 58/10.2 |
| C554 | 4030006880 | S.CER C1608 JB 1H 472K-T | T | 90.3/12.9 |
| C555 | 4030006880 | S.CER C1608 JB 1H 472K-T | B | 68.8/12.6 |
| C556 | 4030006880 | S.CER C1608 JB 1H 472K-T | B | 69.8/27.9 |
| C557 | 4030006880 | S.CER C1608 JB 1H 472K-T | B | 67.4/32.9 |
| C558 | 4030006880 | S.CER C1608 JB 1H 472K-T | T | 114.3/25.9 |
| C559 | 4030006880 | S.CER C1608 JB 1H 472K-T | T | 90.4/27.1 |
| C560 | 4030006880 | S.CER C1608 JB 1H 472K-T | T | 90.4/30.5 |
| C561 | 4030006880 | S.CER C1608 JB 1H 472K-T | T | 114.3/29.9 |
| C562 | 4030006880 | S.CER C1608 JB 1H 472K-T | T | 138.2/27.1 |
| C563 | 4030006880 | S.CER C1608 JB 1H 472K-T | T | 138.2/30.5 |

## [DIGISEL UNIT]

| REF NO. | ORDER NO. | DESCRIPTION | M. | H/V LOCATION |
|---|---|---|---|---|
| C564 | 4030006880 | S.CER C1608 JB 1H 472K-T | T | 162.1/27.2 |
| C565 | 4030006880 | S.CER C1608 JB 1H 472K-T | T | 162.1/30.4 |
| C566 | 4030006880 | S.CER C1608 JB 1H 472K-T | B | 180.9/33.5 |
| C567 | 4030006880 | S.CER C1608 JB 1H 472K-T | T | 109.8/17.8 |
| C568 | 4030006880 | S.CER C1608 JB 1H 472K-T | T | 90.4/19.5 |
| C569 | 4030006880 | S.CER C1608 JB 1H 472K-T | B | 181.8/17.1 |
| C570 | 4030006880 | S.CER C1608 JB 1H 472K-T | T | 162.1/22.4 |
| C571 | 4030006880 | S.CER C1608 JB 1H 472K-T | T | 158.5/17.6 |
| C572 | 4030006880 | S.CER C1608 JB 1H 472K-T | T | 138.2/23.1 |
| C573 | 4030006880 | S.CER C1608 JB 1H 472K-T | T | 134.8/17.5 |
| C574 | 4030006880 | S.CER C1608 JB 1H 472K-T | T | 114.3/20.6 |
| C575 | 4030006880 | S.CER C1608 JB 1H 472K-T | T | 90.4/23.3 |
| C601 | 4030011340 | S.CER C1608 CH 1H 471J-T | B | 66/22.5 |
| C602 | 4030011280 | S.CER C1608 CH 1H 271J-T | B | 65.2/26.7 |
| C603 | 4030011280 | S.CER C1608 CH 1H 271J-T | T | 59.1/35.6 |
| C604 | 4030007130 | S.CER C1608 CH 1H 101J-T | T | 57.7/33 |
| C605 | 4030006940 | S.CER C1608 CH 1H 030C-T | T | 57.2/29 |
| C606 | 4030007150 | S.CER C1608 CH 1H 151J-T | T | 55.6/30.7 |
| C607 | 4030007150 | S.CER C1608 CH 1H 151J-T | T | 57.2/25.4 |
| C608 | 4030007150 | S.CER C1608 CH 1H 151J-T | T | 57.2/23.8 |
| C609 | 4030007150 | S.CER C1608 CH 1H 151J-T | T | 56.8/22.5 |
| C610 | 4030009520 | S.CER C1608 CH 1H 020B-T | B | 77.3/11.3 |
| C611 | 4030009550 | S.CER C1608 CH 1H 2R5B-T | B | 76/11.3 |
| C613 | 4030007000 | S.CER C1608 CH 1H 090D-T | B | 73.8/12.5 |
| C614 | 4030007040 | S.CER C1608 CH 1H 180J-T | B | 73.7/21.1 |
| C615 | 4030007040 | S.CER C1608 CH 1H 180J-T | B | 73.9/28.2 |
| C616 | 4030007040 | S.CER C1608 CH 1H 180J-T | B | 73.9/29.7 |
| C617 | 4030007070 | S.CER C1608 CH 1H 330J-T | B | 76/19.4 |
| C618 | 4030007090 | S.CER C1608 CH 1H 470J-T | T | 75.5/20.7 |
| C619 | 4030007040 | S.CER C1608 CH 1H 180J-T | T | 65.6/35.3 |
| C620 | 4030007040 | S.CER C1608 CH 1H 180J-T | T | 65.7/36.7 |
| C621 | 4030007040 | S.CER C1608 CH 1H 180J-T | T | 73.7/28.3 |
| C622 | 4030007000 | S.CER C1608 CH 1H 090D-T | T | 73.2/20.2 |
| C624 | 4030009520 | S.CER C1608 CH 1H 020B-T | T | 76.9/10.6 |
| C625 | 4030009550 | S.CER C1608 CH 1H 2R5B-T | T | 76.9/12 |
| C626 | 4030008360 | S.CER C1608 UJ 1H 101J-T | B | 124.5/17.4 |
| C628 | 4030009500 | S.CER C1608 CH 1H 0R5B-T | B | 107.4/25.3 |
| C629 | 4030009510 | S.CER C1608 CH 1H 010B-T | B | 83.3/25.5 |
| C630 | 4030009520 | S.CER C1608 CH 1H 020B-T | B | 97.8/25.3 |
| C631 | 4030009910 | S.CER C1608 CH 1H 040B-T | B | 121.2/25.3 |
| C632 | 4030006990 | S.CER C1608 CH 1H 080D-T | B | 131.3/25.3 |
| C633 | 4030007040 | S.CER C1608 CH 1H 180J-T | B | 145.2/25.3 |
| C634 | 4030008750 | S.CER C1608 CH 1H 360J-T | B | 155.2/25.3 |
| C635 | 4030007110 | S.CER C1608 CH 1H 680J-T | B | 169/25.3 |
| C636 | 4030007140 | S.CER C1608 CH 1H 121J-T | B | 179.1/25.3 |
| C637 | 4030007140 | S.CER C1608 CH 1H 121J-T | B | 107.4/18.3 |
| C638 | 4030007130 | S.CER C1608 CH 1H 101J-T | B | 107.4/16.5 |
| C639 | 4030007160 | S.CER C1608 CH 1H 181J-T | B | 83.9/18.1 |
| C640 | 4030007160 | S.CER C1608 CH 1H 181J-T | B | 84.7/16.3 |
| C641 | 4030008330 | S.CER C1608 UJ 1H 560J-T | B | 177/17.9 |
| C642 | 4030008330 | S.CER C1608 UJ 1H 560J-T | B | 169/18 |
| C643 | 4030007090 | S.CER C1608 CH 1H 470J-T | B | 155.5/18 |
| C701 | 4030011600 | S.CER C1608 JB 1E 104K-T | T | 52.3/17.7 |
| C702 | 4030006900 | S.CER C1608 JB 1H 103K-T | T | 54.6/27.3 |
| C703 | 4030011600 | S.CER C1608 JB 1E 104K-T | B | 40.3/10.4 |
| C704 | 4030011600 | S.CER C1608 JB 1E 104K-T | B | 52.1/9.8 |
| C705 | 4030011600 | S.CER C1608 JB 1E 104K-T | B | 44/28.1 |
| C706 | 4030011600 | S.CER C1608 JB 1E 104K-T | T | 45.1/22.6 |
| C707 | 4030006880 | S.CER C1608 JB 1H 472K-T | B | 42.7/28.1 |
| C708 | 4030007010 | S.CER C1608 CH 1H 100D-T | T | 46.5/22.7 |
| C709 | 4030006880 | S.CER C1608 JB 1H 472K-T | B | 40.6/28.9 |
| C710 | 4030006900 | S.CER C1608 JB 1H 103K-T | B | 45.6/22.7 |
| C711 | 4030009000 | S.CER C2012 JB 1C 224K-T | B | 45.7/24.4 |
| C712 | 4030006880 | S.CER C1608 JB 1H 472K-T | T | 54.8/32.3 |
| C713 | 4030006880 | S.CER C1608 JB 1H 472K-T | B | 52.1/7.9 |
| C714 | 4030006880 | S.CER C1608 JB 1H 472K-T | B | 42.4/6.5 |
| C715 | 4030006880 | S.CER C1608 JB 1H 472K-T | T | 54.2/34.3 |
| | | | | |
| RL2 | 6330001750 | RLY FTR-B4CA012Z | | |
| RL21 | 6330001750 | RLY FTR-B4CA012Z | | |
| RL51 | 6330001750 | RLY FTR-B4CA012Z | | |
| RL52 | 6330001750 | RLY FTR-B4CA012Z | | |
| RL53 | 6330001750 | RLY FTR-B4CA012Z | | |
| RL54 | 6330001750 | RLY FTR-B4CA012Z | | |
| RL55 | 6330001750 | RLY FTR-B4CA012Z | | |
| RL56 | 6330001750 | RLY FTR-B4CA012Z | | |
| RL57 | 6330001750 | RLY FTR-B4CA012Z | | |
| RL58 | 6330001750 | RLY FTR-B4CA012Z | | |
| RL59 | 6330001750 | RLY FTR-B4CA012Z | | |
| RL60 | 6330001750 | RLY FTR-B4CA012Z | | |
| RL61 | 6330001750 | RLY FTR-B4CA012Z | | |
| RL62 | 6330001750 | RLY FTR-B4CA012Z | | |
| RL63 | 6330001750 | RLY FTR-B4CA012Z | | |
| RL64 | 6330001750 | RLY FTR-B4CA012Z | | |
| RL65 | 6330001750 | RLY FTR-B4CA012Z | | |
| RL66 | 6330001750 | RLY FTR-B4CA012Z | | |
| RL67 | 6330001750 | RLY FTR-B4CA012Z | | |
| RL69 | 6330001750 | RLY FTR-B4CA012Z | | |
| RL70 | 6330001750 | RLY FTR-B4CA012Z | | |
| RL71 | 6330001750 | RLY FTR-B4CA012Z | | |
| RL72 | 6330001750 | RLY FTR-B4CA012Z | | |
| RL73 | 6330001750 | RLY FTR-B4CA012Z | | |
| RL74 | 6330001750 | RLY FTR-B4CA012Z | | |
| RL75 | 6330001750 | RLY FTR-B4CA012Z | | |
| RL76 | 6330001750 | RLY FTR-B4CA012Z | | |
| RL201 | 6330001750 | RLY FTR-B4CA012Z | | |
| RL502 | 6330001750 | RLY FTR-B4CA012Z | | |
| RL521 | 6330001750 | RLY FTR-B4CA012Z | | |
| RL551 | 6330001750 | RLY FTR-B4CA012Z | | |
| RL552 | 6330001750 | RLY FTR-B4CA012Z | | |
| RL553 | 6330001750 | RLY FTR-B4CA012Z | | |
| RL554 | 6330001750 | RLY FTR-B4CA012Z | | |
| RL555 | 6330001750 | RLY FTR-B4CA012Z | | |

M.=Mounted side (T: Mounted on the Top side, B: Mounted on the Bottom side)
S.=Surface mount

## [DIGISEL UNIT]

| REF NO. | ORDER NO. | DESCRIPTION | | M. | H/V LOCATION |
|---|---|---|---|---|---|
| RL556 | 6330001750 | RLY | FTR-B4CA012Z | | |
| RL557 | 6330001750 | RLY | FTR-B4CA012Z | | |
| RL558 | 6330001750 | RLY | FTR-B4CA012Z | | |
| RL559 | 6330001750 | RLY | FTR-B4CA012Z | | |
| RL560 | 6330001750 | RLY | FTR-B4CA012Z | | |
| RL561 | 6330001750 | RLY | FTR-B4CA012Z | | |
| RL562 | 6330001750 | RLY | FTR-B4CA012Z | | |
| RL563 | 6330001750 | RLY | FTR-B4CA012Z | | |
| RL564 | 6330001750 | RLY | FTR-B4CA012Z | | |
| RL565 | 6330001750 | RLY | FTR-B4CA012Z | | |
| RL566 | 6330001750 | RLY | FTR-B4CA012Z | | |
| RL567 | 6330001750 | RLY | FTR-B4CA012Z | | |
| RL569 | 6330001750 | RLY | FTR-B4CA012Z | | |
| RL570 | 6330001750 | RLY | FTR-B4CA012Z | | |
| RL571 | 6330001750 | RLY | FTR-B4CA012Z | | |
| RL572 | 6330001750 | RLY | FTR-B4CA012Z | | |
| RL573 | 6330001750 | RLY | FTR-B4CA012Z | | |
| RL574 | 6330001750 | RLY | FTR-B4CA012Z | | |
| RL575 | 6330001750 | RLY | FTR-B4CA012Z | | |
| RL576 | 6330001750 | RLY | FTR-B4CA012Z | | |
| RL701 | 6330001750 | RLY | FTR-B4CA012Z | | |
| J1 | 6510007020 | CNR | TMP-J01X-V6 | | |
| J2 | 6510007020 | CNR | TMP-J01X-V6 | | |
| J10 | 6510020081 | S.CNR | 52808-2071 (2090) | T | 4.5/40.5 |
| J501 | 6510007020 | CNR | TMP-J01X-V6 | | |
| J502 | 6510007020 | CNR | TMP-J01X-V6 | | |

## [NETWORK UNIT]

| REF NO. | ORDER NO. | DESCRIPTION | | M. | H/V LOCATION |
|---|---|---|---|---|---|
| Q300 | 1520000561 | S.TR | 2SB1123 T-TD-E | T | 205.7/10.5 |
| Q301 | 1590000680 | S.TR | DTC114EUA T106 | T | 201.4/9.1 |
| L50 | 6110003950 | COL | LA-598 | | |
| L60 | 6110003910 | COL | LA-593 | | |
| L70 | 6110003050 | COL | LA-492 | | |
| L80 | 6110003050 | COL | LA-492 | | |
| L90 | 6110003060 | COL | LA-493 | | |
| L100 | 6110003070 | COL | LA-494 | | |
| L110 | 6110003920 | COL | LA-594 | | |
| L120 | 6140004460 | COL | LR-504 | | |
| L130 | 6140004470 | COL | LR-505 | | |
| L131 | 6140004470 | COL | LR-505 | | |
| L300 | 6180000990 | COL | LAL 04NA 101K | | |
| R300 | 7030000420 | S.RES | MCR10EZHJ 2.2 k | T | 202.8/6.9 |
| R301 | 7030000420 | S.RES | MCR10EZHJ 2.2 k | T | 201.5/11.3 |
| R302 | 7030000420 | S.RES | MCR10EZHJ 2.2 k | T | 206.2/6.9 |
| R303 | 7030009800 | S.RES | ERJ12YJ121U (120) | T | 209.7/5 |
| C1 | 4620000150 | VAR | KB-150-07 150P | | |
| C2 | 4620000150 | VAR | KB-150-07 150P | | |
| C3 | 4010007580 | CER | HT20SJ SL 201J 3KV | | |
| C4 | 4010007580 | CER | HT20SJ SL 201J 3KV | | |
| C5 | 4010007580 | CER | HT20SJ SL 201J 3KV | | |
| C6 | 4010007580 | CER | HT20SJ SL 201J 3KV | | |
| C7 | 4010007580 | CER | HT20SJ SL 201J 3KV | | |
| C8 | 4010007580 | CER | HT20SJ SL 201J 3KV | | |
| C9 | 4010007580 | CER | HT20SJ SL 201J 3KV | | |
| C10 | 4010007580 | CER | HT20SJ SL 201J 3KV | | |
| C20 | 4010007570 | CER | HT15SJ SL 151J 3KV | | |
| C21 | 4010007570 | CER | HT15SJ SL 151J 3KV | | |
| C22 | 4010007570 | CER | HT15SJ SL 151J 3KV | | |
| C23 | 4010007570 | CER | HT15SJ SL 151J 3KV | | |
| C24 | 4010007570 | CER | HT15SJ SL 151J 3KV | | |
| C25 | 4010007570 | CER | HT15SJ SL 151J 3KV | | |
| C26 | 4010007570 | CER | HT15SJ SL 151J 3KV | | |
| C27 | 4010007570 | CER | HT15SJ SL 151J 3KV | | |
| C30 | 4010007550 | CER | HT11SJ SL 820J 3KV | | |
| C31 | 4010007550 | CER | HT11SJ SL 820J 3KV | | |
| C32 | 4010007550 | CER | HT11SJ SL 820J 3KV | | |
| C33 | 4010007550 | CER | HT11SJ SL 820J 3KV | | |
| C34 | 4010007550 | CER | HT11SJ SL 820J 3KV | | |
| C35 | 4010007550 | CER | HT11SJ SL 820J 3KV | | |
| C36 | 4010007550 | CER | HT11SJ SL 820J 3KV | | |
| C37 | 4010007550 | CER | HT11SJ SL 820J 3KV | | |
| C40 | 4010008550 | CER | DEA1X3F390JC3B | | |
| C41 | 4010008550 | CER | DEA1X3F390JC3B | | |
| C42 | 4010008550 | CER | DEA1X3F390JC3B | | |
| C43 | 4010008550 | CER | DEA1X3F390JC3B | | |
| C44 | 4010008550 | CER | DEA1X3F390JC3B | | |
| C45 | 4010008550 | CER | DEA1X3F390JC3B | | |
| C46 | 4010008550 | CER | DEA1X3F390JC3B | | |
| C47 | 4010008550 | CER | DEA1X3F390JC3B | | |
| C50 | 4030006880 | S.CER | C1608 JB 1H 472K-T | T | 140.7/12 |
| C60 | 4030006880 | S.CER | C1608 JB 1H 472K-T | T | 154.1/12 |
| C70 | 4030006880 | S.CER | C1608 JB 1H 472K-T | T | 167.5/16.1 |
| C80 | 4030006880 | S.CER | C1608 JB 1H 472K-T | T | 181.9/21.5 |
| C90 | 4030006880 | S.CER | C1608 JB 1H 472K-T | T | 195.3/21.3 |
| C100 | 4030006880 | S.CER | C1608 JB 1H 472K-T | T | 204.4/20.7 |
| C110 | 4030006880 | S.CER | C1608 JB 1H 472K-T | T | 205.8/20.7 |
| C120 | 4030006880 | S.CER | C1608 JB 1H 472K-T | T | 207.2/20.6 |
| C202 | 4030006880 | S.CER | C1608 JB 1H 472K-T | T | 187.4/13.2 |
| C203 | 4030006880 | S.CER | C1608 JB 1H 472K-T | T | 188.4/15.7 |
| C204 | 4030006880 | S.CER | C1608 JB 1H 472K-T | T | 189.4/13.2 |
| C205 | 4030006880 | S.CER | C1608 JB 1H 472K-T | T | 190.4/15.7 |
| C206 | 4030006880 | S.CER | C1608 JB 1H 472K-T | T | 191.4/13.2 |
| C207 | 4030006880 | S.CER | C1608 JB 1H 472K-T | T | 192.4/15.7 |
| C208 | 4030006880 | S.CER | C1608 JB 1H 472K-T | T | 193.4/13.2 |
| C209 | 4030006880 | S.CER | C1608 JB 1H 472K-T | T | 194.4/15.7 |
| C252 | 4030006880 | S.CER | C1608 JB 1H 472K-T | T | 175.4/13.2 |
| C253 | 4030006880 | S.CER | C1608 JB 1H 472K-T | T | 176.4/15.7 |
| C254 | 4030006880 | S.CER | C1608 JB 1H 472K-T | T | 177.4/13.2 |
| C255 | 4030006880 | S.CER | C1608 JB 1H 472K-T | T | 178.4/15.7 |
| C256 | 4030006880 | S.CER | C1608 JB 1H 472K-T | T | 179.4/13.2 |
| C257 | 4030006880 | S.CER | C1608 JB 1H 472K-T | T | 180.4/15.7 |
| C258 | 4030006880 | S.CER | C1608 JB 1H 472K-T | T | 181.4/13.2 |
| C259 | 4030006880 | S.CER | C1608 JB 1H 472K-T | T | 182.4/15.7 |
| C300 | 4030006880 | S.CER | C1608 JB 1H 472K-T | T | 184.4/13.2 |
| C301 | 4030006880 | S.CER | C1608 JB 1H 472K-T | T | 210.5/10.1 |
| RL10 | 6330001200 | RLY | VS-12MBU-UC | | |
| RL11 | 6330001200 | RLY | VS-12MBU-UC | | |
| RL20 | 6330001200 | RLY | VS-12MBU-UC | | |
| RL21 | 6330001200 | RLY | VS-12MBU-UC | | |
| RL30 | 6330001200 | RLY | VS-12MBU-UC | | |
| RL31 | 6330001200 | RLY | VS-12MBU-UC | | |
| RL40 | 6330001200 | RLY | VS-12MBU-UC | | |
| RL41 | 6330001200 | RLY | VS-12MBU-UC | | |
| RL50 | 6330001460 | RLY | FTR-F1CA012V | | |
| RL60 | 6330001200 | RLY | VS-12MBU-UC | | |
| RL70 | 6330001200 | RLY | VS-12MBU-UC | | |
| RL80 | 6330001200 | RLY | VS-12MBU-UC | | |
| RL90 | 6330001200 | RLY | VS-12MBU-UC | | |
| RL100 | 6330001200 | RLY | VS-12MBU-UC | | |
| RL110 | 6330001200 | RLY | VS-12MBU-UC | | |
| RL120 | 6330001200 | RLY | VS-12MBU-UC | | |
| J1 | 6510021561 | S.CNR | 52808-2470 (2490) | T | 184.9/7.4 |
| J2 | 6510017930 | CNR | 1771P145-20 | | |
| J3 | 6510017930 | CNR | 1771P145-20 | | |
| J4 | 6510003521 | CNR | S04B-EH-S (LF) (SN) | | |

M.=Mounted side (T: Mounted on the Top side, B: Mounted on the Bottom side)
S.=Surface mount

## [FILTER UNIT]

| REF NO. | ORDER NO. | DESCRIPTION | | M. | H/V LOCATION |
|---|---|---|---|---|---|
| D402 | 1750000271 | S.DIO | 1SS301 (TE85L,F) | T | 11.8/24.3 |
| D452 | 1750000271 | S.DIO | 1SS301 (TE85L,F) | T | 32/20.5 |
| D502 | 1750000271 | S.DIO | 1SS301 (TE85L,F) | T | 54.8/30.3 |
| D552 | 1750000271 | S.DIO | 1SS301 (TE85L,F) | T | 155.6/29.1 |
| D602 | 1750000271 | S.DIO | 1SS301 (TE85L,F) | T | 130.1/20.3 |
| D652 | 1750000271 | S.DIO | 1SS301 (TE85L,F) | T | 93.8/33 |
| D702 | 1750000271 | S.DIO | 1SS301 (TE85L,F) | T | 69.6/20.3 |
| D752 | 1750000271 | S.DIO | 1SS301 (TE85L,F) | T | 113.1/33 |
| D802 | 1750000271 | S.DIO | 1SS301 (TE85L,F) | T | 173.6/25.9 |
| L401 | 6200005131 | S.COL | NLC453232T-101K-PF | T | 25.4/136.7 |
| L402 | 6140004310 | COL | LR-471 | | |
| L403 | 6140004300 | COL | LR-470 | | |
| L404 | 6140004300 | COL | LR-470 | | |
| L405 | 6200005131 | S.COL | NLC453232T-101K-PF | T | 7.3/24.6 |
| L451 | 6200005131 | S.COL | NLC453232T-101K-PF | T | 4.4/143.9 |
| L452 | 6140004270 | COL | LR-467 | | |
| L453 | 6140004290 | COL | LR-469 | | |
| L454 | 6140004290 | COL | LR-469 | | |
| L455 | 6200005131 | S.COL | NLC453232T-101K-PF | T | 28.4/29.9 |
| L501 | 6200005131 | S.COL | NLC453232T-101K-PF | T | 46.3/133.8 |
| L502 | 6140004280 | COL | LR-468 | | |
| L503 | 6140004270 | COL | LR-467 | | |
| L504 | 6140004270 | COL | LR-467 | | |
| L505 | 6200005131 | S.COL | NLC453232T-101K-PF | T | 50.2/29.6 |
| L551 | 6200005131 | S.COL | NLC453232T-101K-PF | T | 150.7/133.8 |
| L552 | 6140004260 | COL | LR-466 | | |
| L553 | 6140004280 | COL | LR-468 | | |
| L554 | 6140004280 | COL | LR-468 | | |
| L555 | 6200005131 | S.COL | NLC453232T-101K-PF | T | 151/29.7 |
| L601 | 6200005131 | S.COL | NLC453232T-101K-PF | T | 129.9/133.8 |
| L602 | 6140004250 | COL | LR-465 | | |
| L603 | 6140004240 | COL | LR-464 | | |
| L604 | 6140004240 | COL | LR-464 | | |
| L605 | 6200005131 | S.COL | NLC453232T-101K-PF | T | 130.1/14.2 |
| L651 | 6200005131 | S.COL | NLC453232T-101K-PF | T | 88.2/133.8 |
| L652 | 6140004200 | COL | LR-463 | | |
| L653 | 6140004170 | COL | LR-462 | | |
| L654 | 6140004170 | COL | LR-462 | | |
| L655 | 6200005131 | S.COL | NLC453232T-101K-PF | T | 92.3/29.8 |
| L701 | 6200005131 | S.COL | NLC453232T-101K-PF | T | 67.2/133.8 |
| L702 | 6140004130 | COL | LR-461 | | |
| L703 | 6140004070 | COL | LR-460 | | |
| L704 | 6140004070 | COL | LR-460 | | |
| L705 | 6200005131 | S.COL | NLC453232T-101K-PF | T | 69.6/14.1 |
| L751 | 6200005131 | S.COL | NLC453232T-101K-PF | T | 109.1/133.8 |
| L752 | 6110003900 | COL | LA-592 | | |
| L753 | 6110003890 | COL | LA-591 | | |
| L754 | 6110003890 | COL | LA-591 | | |
| L755 | 6200005131 | S.COL | NLC453232T-101K-PF | T | 111.4/29.8 |
| L801 | 6200001831 | S.COL | NLV32T-100J | T | 165.9/163.4 |
| L802 | 6110003880 | COL | LA-590 | | |
| L803 | 6110003870 | COL | LA-589 | | |
| L804 | 6110003870 | COL | LA-589 | | |
| L805 | 6200001831 | S.COL | NLV32T-100J | T | 173.9/22.8 |
| C401 | 4030006880 | S.CER | C1608 JB 1H 472K-T | T | 25.4/130.4 |
| C402 | 4010008200 | CER | HM11TJ SL 331J 500V | | |
| C403 | 4010008200 | CER | HM11TJ SL 331J 500V | | |
| C404 | 4010008300 | CER | HM11TJ SL 391J 500V | | |
| C405 | 4010008300 | CER | HM11TJ SL 391J 500V | | |
| C406 | 4010008210 | CER | HM60TJ SL 560J 500V | | |
| C407 | 4010007590 | CER | HM15SJ SL 681J 500V | | |
| C408 | 4010007590 | CER | HM15SJ SL 681J 500V | | |
| C409 | 4010007590 | CER | HM15SJ SL 681J 500V | | |
| C410 | 4010005870 | CER | HM95SJ SL 221J 500V | | |
| C411 | 4010008280 | CER | HM95TJ SL 221J 500V | | |
| C412 | 4010008370 | CER | HM60TJ SL 150J 500V | | |
| C413 | 4010007590 | CER | HM15SJ SL 681J 500V | | |
| C414 | 4010007590 | CER | HM15SJ SL 681J 500V | | |
| C415 | 4010007590 | CER | HM15SJ SL 681J 500V | | |
| C416 | 4010008300 | CER | HM11TJ SL 391J 500V | | |
| C417 | 4010008230 | CER | HM60TJ SL 820J 500V | | |
| C418 | 4010007590 | CER | HM15SJ SL 681J 500V | | |
| C419 | 4010007590 | CER | HM15SJ SL 681J 500V | | |
| C420 | 4030006880 | S.CER | C1608 JB 1H 472K-T | T | 11.6/26.3 |
| C451 | 4030006880 | S.CER | C1608 JB 1H 472K-T | T | 26.6/127.9 |
| C452 | 4010008290 | CER | HM95TJ SL 271J 500V | | |
| C453 | 4010008280 | CER | HM95TJ SL 221J 500V | | |
| C454 | 4010008240 | CER | HM60TJ SL 101J 500V | | |
| C455 | 4010005810 | CER | HM74SJ SL 111J 500V | | |
| C456 | 4010007490 | CER | HM15SJ SL 561J 500V | | |
| C457 | 4010006410 | CER | HM13SJ SL 471J 500V | | |
| C458 | 4010008250 | CER | HM74TJ SL 121J 500V | | |
| C459 | 4010005810 | CER | HM74SJ SL 111J 500V | | |
| C461 | 4010007490 | CER | HM15SJ SL 561J 500V | | |
| C462 | 4010007490 | CER | HM15SJ SL 561J 500V | | |
| C463 | 4010008340 | CER | HM60TJ SL 270J 500V | | |
| C464 | 4010008320 | CER | HM60TJ SL 390J 500V | | |
| C465 | 4010007490 | CER | HM15SJ SL 561J 500V | | |
| C466 | 4010008220 | CER | HM60TJ SL 680J 500V | | |
| C467 | 4030006880 | S.CER | C1608 JB 1H 472K-T | T | 32.4/23.4 |
| C468 | 4010008230 | CER | HM60TJ SL 820J 500V | | |
| C501 | 4030006880 | S.CER | C1608 JB 1H 472K-T | T | 47.6/127.3 |
| C502 | 4010008280 | CER | HM95TJ SL 221J 500V | | |
| C503 | 4010008260 | CER | HM74TJ SL 151J 500V | | |
| C504 | 4010008280 | CER | HM95TJ SL 221J 500V | | |
| C506 | 4010008200 | CER | HM11TJ SL 331J 500V | | |
| C507 | 4010008280 | CER | HM95TJ SL 221J 500V | | |
| C508 | 4010008280 | CER | HM95TJ SL 221J 500V | | |
| C509 | 4010005810 | CER | HM74SJ SL 111J 500V | | |
| C511 | 4010008300 | CER | HM11TJ SL 391J 500V | | |
| C512 | 4010008300 | CER | HM11TJ SL 391J 500V | | |
| C513 | 4010008260 | CER | HM74TJ SL 151J 500V | | |

## [FILTER UNIT]

| REF NO. | ORDER NO. | DESCRIPTION | | M. | H/V LOCATION |
|---|---|---|---|---|---|
| C514 | 4010008320 | CER | HM60TJ SL 390J 500V | | |
| C515 | 4010008280 | CER | HM95TJ SL 221J 500V | | |
| C516 | 4010008280 | CER | HM95TJ SL 221J 500V | | |
| C517 | 4030006880 | S.CER | C1608 JB 1H 472K-T | T | 54.7/28.4 |
| C518 | 4010008340 | CER | HM60TJ SL 270J 500V | | |
| C551 | 4030006880 | S.CER | C1608 JB 1H 472K-T | T | 149.9/122.5 |
| C552 | 4010005860 | CER | HM95SJ SL 201J 500V | | |
| C554 | 4010008230 | CER | HM60TJ SL 820J 500V | | |
| C555 | 4010008370 | CER | HM60TJ SL 150J 500V | | |
| C556 | 4010008290 | CER | HM95TJ SL 271J 500V | | |
| C557 | 4010008290 | CER | HM95TJ SL 271J 500V | | |
| C558 | 4010008320 | CER | HM60TJ SL 390J 500V | | |
| C559 | 4010008330 | CER | HM60TJ SL 330J 500V | | |
| C560 | 4010008340 | CER | HM60TJ SL 270J 500V | | |
| C561 | 4010008200 | CER | HM11TJ SL 331J 500V | | |
| C562 | 4010008290 | CER | HM95TJ SL 271J 500V | | |
| C563 | 4010008330 | CER | HM60TJ SL 330J 500V | | |
| C564 | 4010005650 | CER | HM60SJ SL 200J 500V | | |
| C565 | 4010008280 | CER | HM95TJ SL 221J 500V | | |
| C566 | 4010008350 | CER | HM60TJ SL 220J 500V | | |
| C567 | 4030006880 | S.CER | C1608 JB 1H 472K-T | T | 152.2/32.2 |
| C601 | 4030006880 | S.CER | C1608 JB 1H 472K-T | T | 130.2/125 |
| C604 | 4010008230 | CER | HM60TJ SL 820J 500V | | |
| C605 | 4010008370 | CER | HM60TJ SL 150J 500V | | |
| C606 | 4010008280 | CER | HM95TJ SL 221J 500V | | |
| C607 | 4010008220 | CER | HM60TJ SL 680J 500V | | |
| C608 | 4010008350 | CER | HM60TJ SL 220J 500V | | |
| C609 | 4010008340 | CER | HM60TJ SL 270J 500V | | |
| C610 | 4010008200 | CER | HM11TJ SL 331J 500V | | |
| C611 | 4010008230 | CER | HM60TJ SL 820J 500V | | |
| C612 | 4010008360 | CER | HM60TJ SL 180J 500V | | |
| C613 | 4010008260 | CER | HM74TJ SL 151J 500V | | |
| C614 | 4010008230 | CER | HM60TJ SL 820J 500V | | |
| C615 | 4030006880 | S.CER | C1608 JB 1H 472K-T | T | 130.2/18.3 |
| C651 | 4030006880 | S.CER | C1608 JB 1H 472K-T | T | 88.3/124.9 |
| C654 | 4010008360 | CER | HM60TJ SL 180J 500V | | |
| C655 | 4010008320 | CER | HM60TJ SL 390J 500V | | |
| C656 | 4010008280 | CER | HM95TJ SL 221J 500V | | |
| C657 | 4010008220 | CER | HM60TJ SL 680J 500V | | |
| C658 | 4010008360 | CER | HM60TJ SL 180J 500V | | |
| C659 | 4010008380 | CER | HM60TJ SL 120J 500V | | |
| C660 | 4010008280 | CER | HM95TJ SL 221J 500V | | |
| C661 | 4010008240 | CER | HM60TJ SL 101J 500V | | |
| C662 | 4010008390 | CER | HM60TJ SL 100D 500V | | |
| C663 | 4010008250 | CER | HM74TJ SL 121J 500V | | |
| C664 | 4010008320 | CER | HM60TJ SL 390J 500V | | |
| C665 | 4030006880 | S.CER | C1608 JB 1H 472K-T | T | 96.6/28.6 |
| C701 | 4030006880 | S.CER | C1608 JB 1H 472K-T | T | 68.6/127.5 |
| C703 | 4010008370 | CER | HM60TJ SL 150J 500V | | |
| C704 | 4010008350 | CER | HM60TJ SL 220J 500V | | |
| C705 | 4010005650 | CER | HM60SJ SL 200J 500V | | |
| C706 | 4010005860 | CER | HM95SJ SL 201J 500V | | |
| C707 | 4010008310 | CER | HM60TJ SL 470J 500V | | |
| C708 | 4010008370 | CER | HM60TJ SL 150J 500V | | |
| C709 | 4010008280 | CER | HM95TJ SL 221J 500V | | |
| C710 | 4010008350 | CER | HM60TJ SL 220J 500V | | |
| C712 | 4010008330 | CER | HM60TJ SL 330J 500V | | |
| C713 | 4010008310 | CER | HM60TJ SL 470J 500V | | |
| C714 | 4030006880 | S.CER | C1608 JB 1H 472K-T | T | 69.6/18.3 |
| C715 | 4010008360 | CER | HM60TJ SL 180J 500V | | |
| C751 | 4030006880 | S.CER | C1608 JB 1H 472K-T | T | 109.1/125 |
| C755 | 4010008240 | CER | HM60TJ SL 101J 500V | | |
| C756 | 4010008230 | CER | HM60TJ SL 820J 500V | | |
| C757 | 4010008360 | CER | HM60TJ SL 180J 500V | | |
| C758 | 4010008210 | CER | HM60TJ SL 560J 500V | | |
| C759 | 4010008240 | CER | HM60TJ SL 101J 500V | | |
| C760 | 4010008400 | CER | HM60TJ SL 060D 500V | | |
| C761 | 4010008310 | CER | HM60TJ SL 470J 500V | | |
| C763 | 4030006880 | S.CER | C1608 JB 1H 472K-T | T | 115.6/28.6 |
| C764 | 4010005650 | CER | HM60SJ SL 200J 500V | | |
| C765 | 4010008370 | CER | HM60TJ SL 150J 500V | | |
| C801 | 4030006880 | S.CER | C1608 JB 1H 472K-T | T | 168.6/158.6 |
| C804 | 4010008360 | CER | HM60TJ SL 180J 500V | | |
| C805 | 4010008320 | CER | HM60TJ SL 390J 500V | | |
| C806 | 4010008310 | CER | HM60TJ SL 470J 500V | | |
| C807 | 4010005600 | CER | HM60SJ SL 090D 500V | | |
| C808 | 4010008330 | CER | HM60TJ SL 330J 500V | | |
| C809 | 4010008320 | CER | HM60TJ SL 390J 500V | | |
| C810 | 4010008410 | CER | HM60TJ SL 030C 500V | | |
| C811 | 4010005560 | CER | HM60SJ SL 050C 500V | | |
| C813 | 4030006880 | S.CER | C1608 JB 1H 472K-T | T | 175.6/26 |
| RL401 | 6330001471 | RLY | AJS1311F-K2 | | |
| RL402 | 6330001471 | RLY | AJS1311F-K2 | | |
| RL451 | 6330001471 | RLY | AJS1311F-K2 | | |
| RL452 | 6330001471 | RLY | AJS1311F-K2 | | |
| RL501 | 6330001471 | RLY | AJS1311F-K2 | | |
| RL502 | 6330001471 | RLY | AJS1311F-K2 | | |
| RL551 | 6330001471 | RLY | AJS1311F-K2 | | |
| RL552 | 6330001471 | RLY | AJS1311F-K2 | | |
| RL601 | 6330001471 | RLY | AJS1311F-K2 | | |
| RL602 | 6330001471 | RLY | AJS1311F-K2 | | |
| RL651 | 6330001471 | RLY | AJS1311F-K2 | | |
| RL652 | 6330001471 | RLY | AJS1311F-K2 | | |
| RL701 | 6330001471 | RLY | AJS1311F-K2 | | |
| RL702 | 6330001471 | RLY | AJS1311F-K2 | | |
| RL751 | 6330001471 | RLY | AJS1311F-K2 | | |
| RL752 | 6330001471 | RLY | AJS1311F-K2 | | |
| RL801 | 6330001460 | RLY | FTR-F1CA012V | | |
| RL802 | 6330001460 | RLY | FTR-F1CA012V | | |
| J901 | 6510017930 | CNR | 1771P145-20 | | |
| J902 | 6510022031 | S.CNR | B10B-ZR-SM4-TF (LF) (SN) | T | 145.3/165.2 |
| J903 | 6510019971 | S.CNR | 52808-1071 | T | 4/156 |

M.=Mounted side (T: Mounted on the Top side, B: Mounted on the Bottom side)
S.=Surface mount

## [MEMORY BOARD]

| REF NO. | ORDER NO. | DESCRIPTION | | M. | H/V LOCATION |
|---|---|---|---|---|---|
| J904 | 6510017930 | CNR | 1771P145-20 | | |
| J905 | 6510019421 | S.CNR | B8B-ZR-SM4-TF (LF) (SN) | T | 146.8/160.2 |
| IC1 | 1130013514 | S.IC | JS28F128J3D-75(SX-2590A-8) | T | 39.8/26.2 |
| IC2 | 1130013515 | S.IC | JS28F128J3D-75(SX-2590A-9) | T | 24/26.2 |
| C1 | 4030011600 | S.CER | C1608 JB 1E 104K-T | T | 41.8/38.8 |
| C2 | 4030011600 | S.CER | C1608 JB 1E 104K-T | T | 39.9/13.2 |
| C3 | 4030011600 | S.CER | C1608 JB 1E 104K-T | T | 36.8/13.2 |
| C4 | 4030011600 | S.CER | C1608 JB 1E 104K-T | T | 26/38.8 |
| C5 | 4030011600 | S.CER | C1608 JB 1E 104K-T | T | 24/13.2 |
| C6 | 4030011600 | S.CER | C1608 JB 1E 104K-T | T | 21/13.2 |
| J1 | 6510024210 | S.CNR | AXK6S30435P | T | 55/20 |
| J2 | 6510024200 | S.CNR | AXK6S40435P | T | 10/20 |

M.=Mounted side (T: Mounted on the Top side, B: Mounted on the Bottom side)

S.=Surface mount

# BOARD LAYOUTS

The combination of this side and the bottom side shows the board layout in the same configuration as the actual P.C.Board.

**• RXPLL-A UNIT (TOP VIEW)**

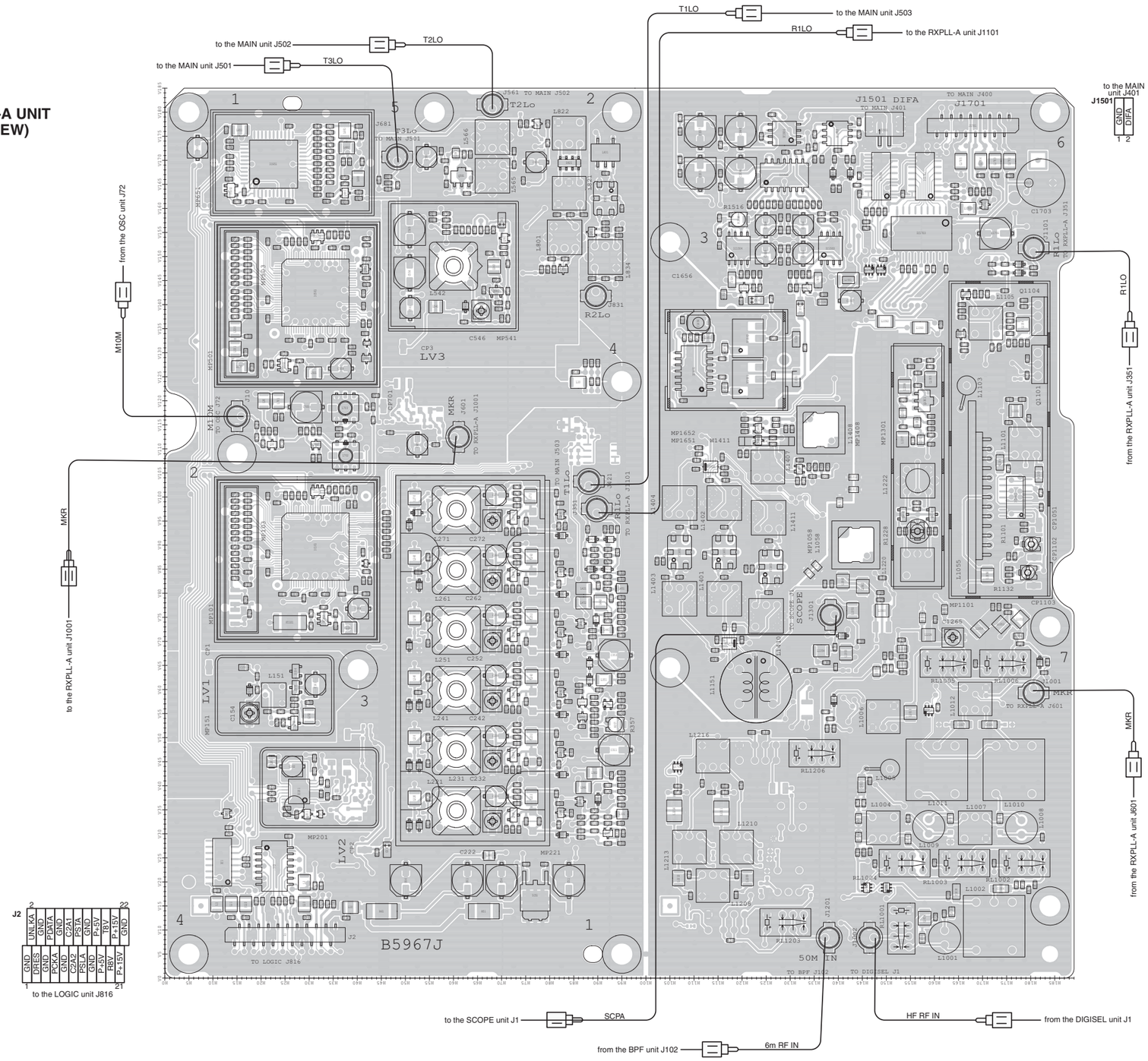

The combination of this side and the bottom side shows the board layout in the same configuration as the actual P.C.Board.

**• RXPLL-A UNIT (BOTTOM VIEW)**

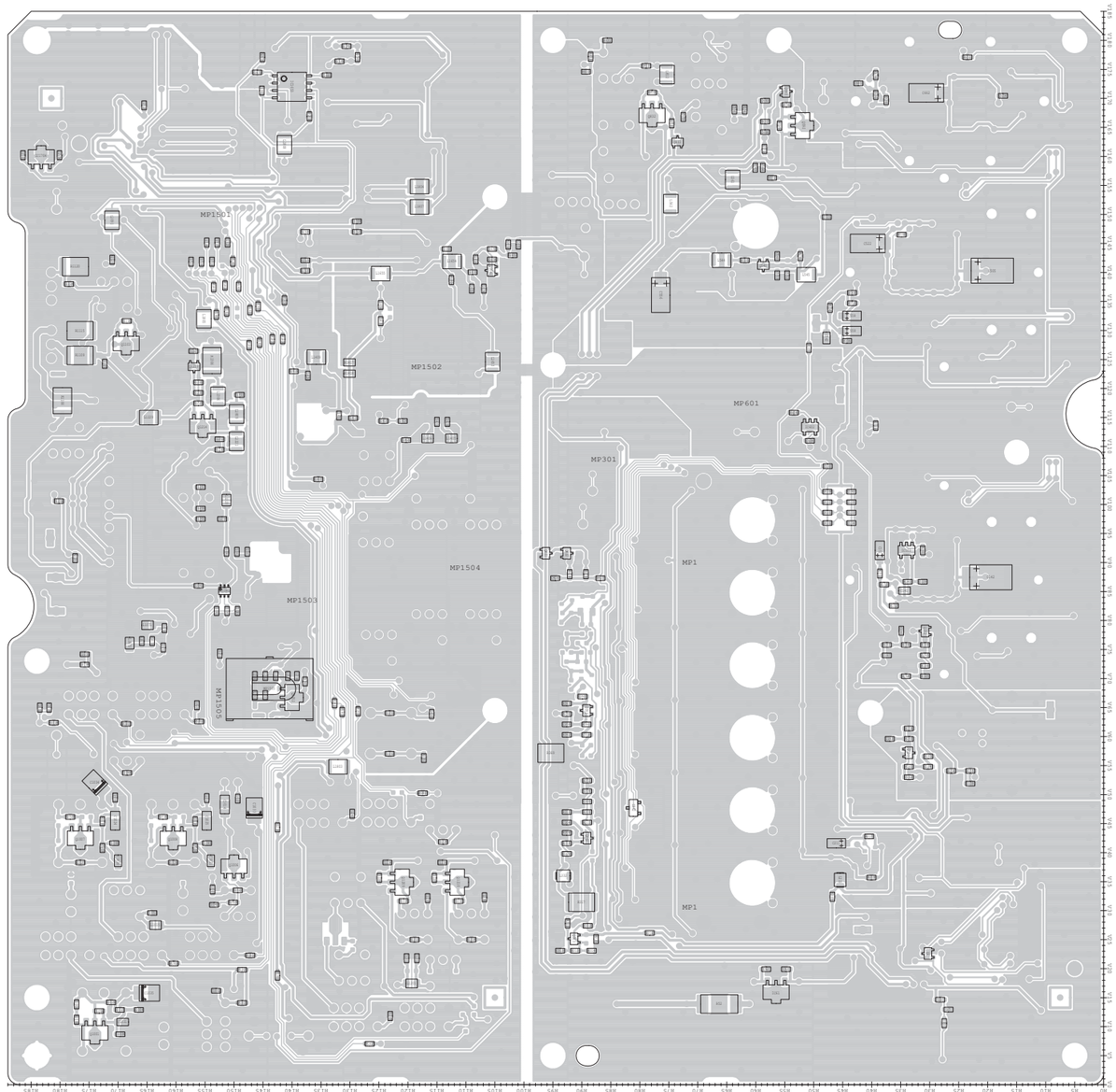

The combination of this side and the bottom side shows the board layout in the same configuration as the actual P.C.Board.

• **RXPLL-B UNIT (TOP VIEW)**

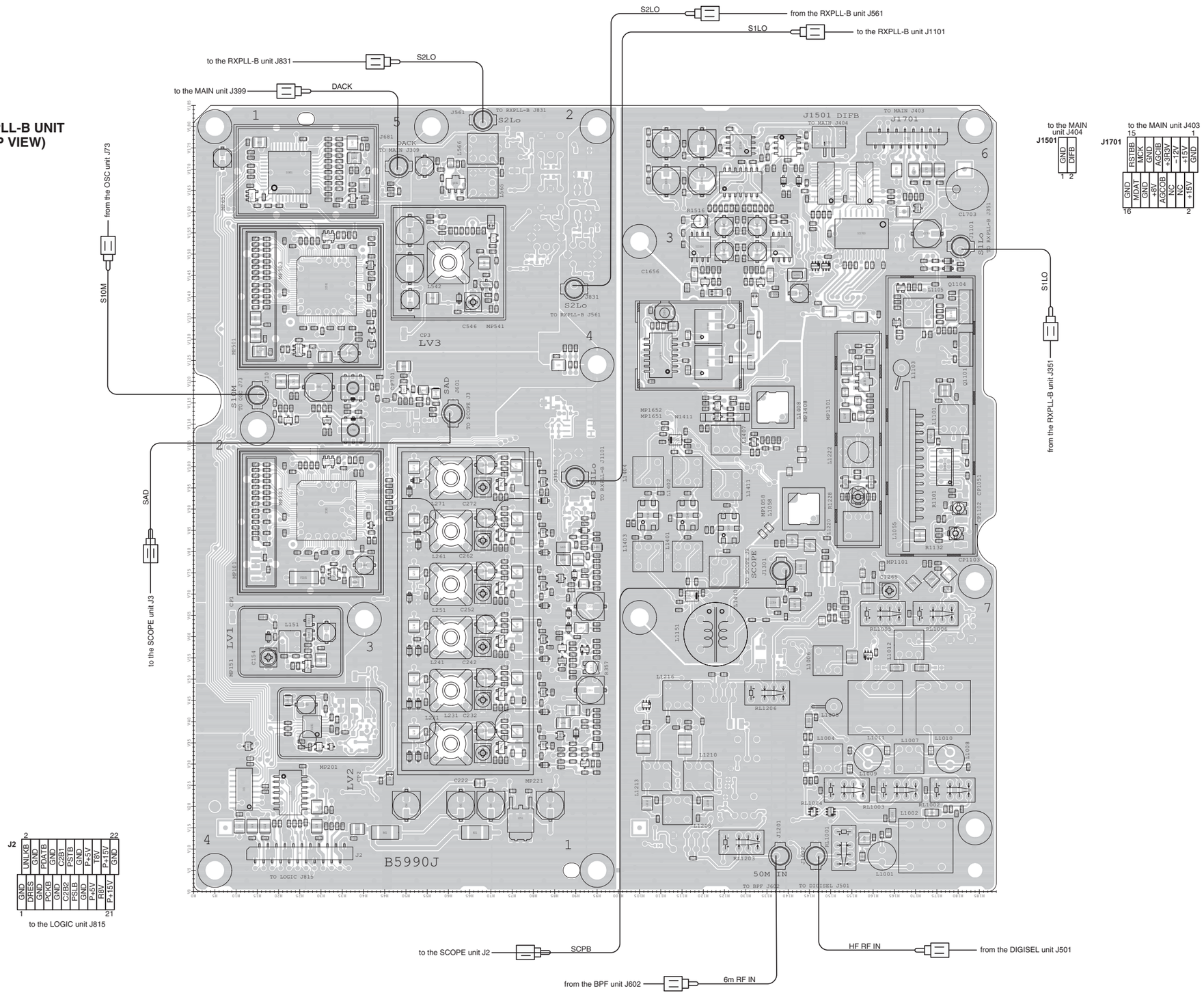

The combination of this side and the bottom side shows the board layout in the same configuration as the actual P.C.Board.

**• RXPLL-B UNIT (BOTTOM VIEW)**

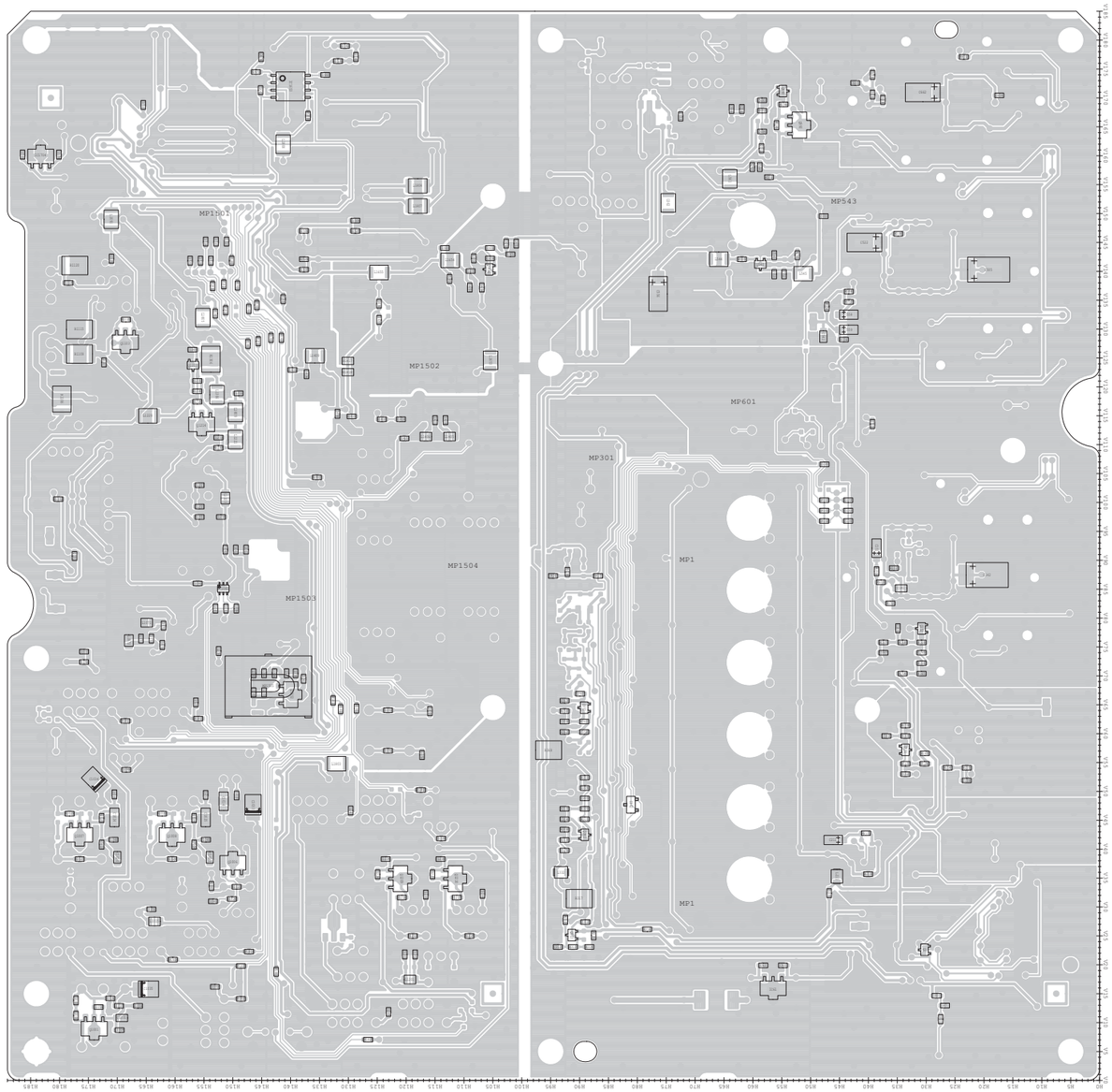

# VOLTAGE DIAGRAMS

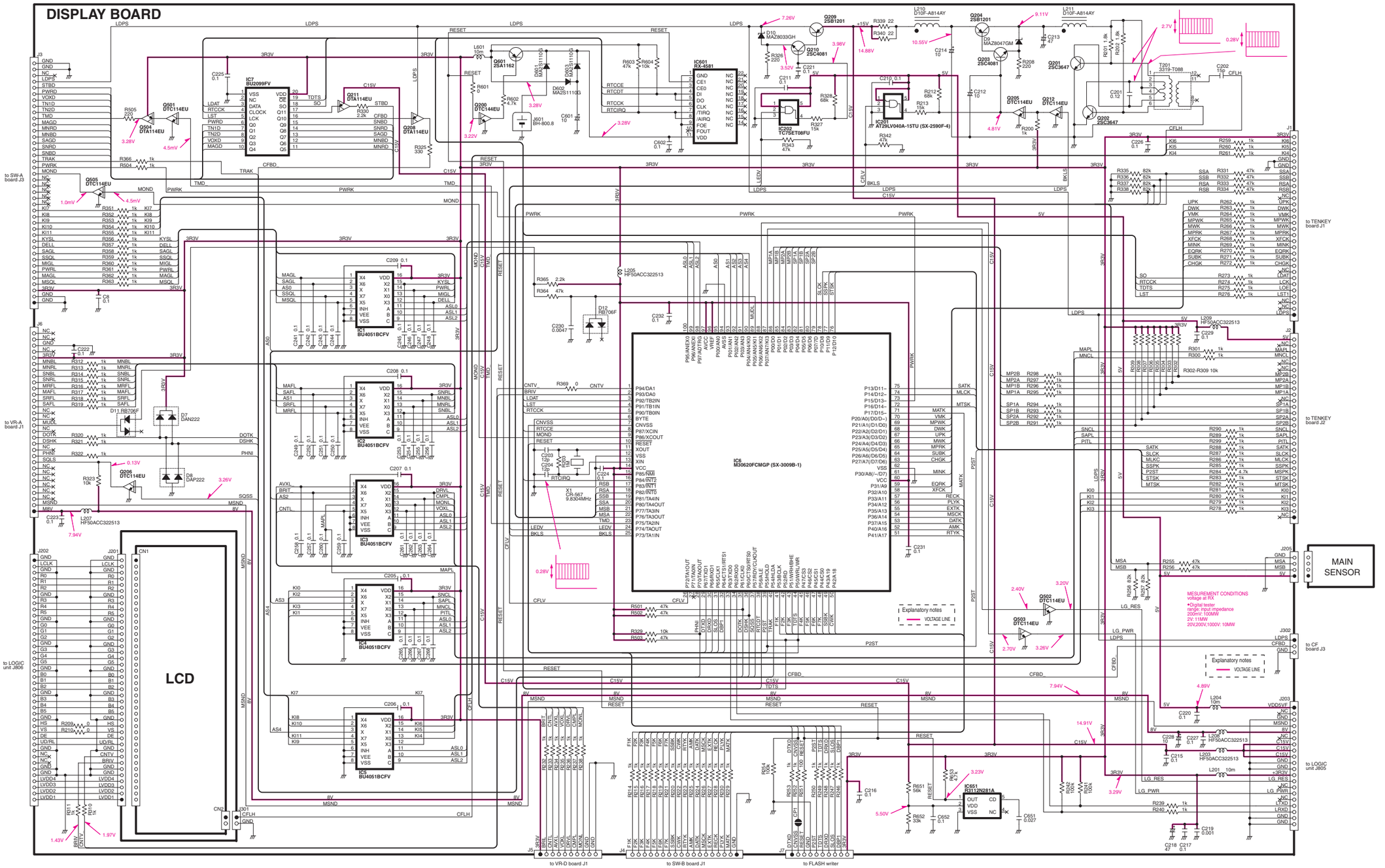

## LOGIC UNIT (1)

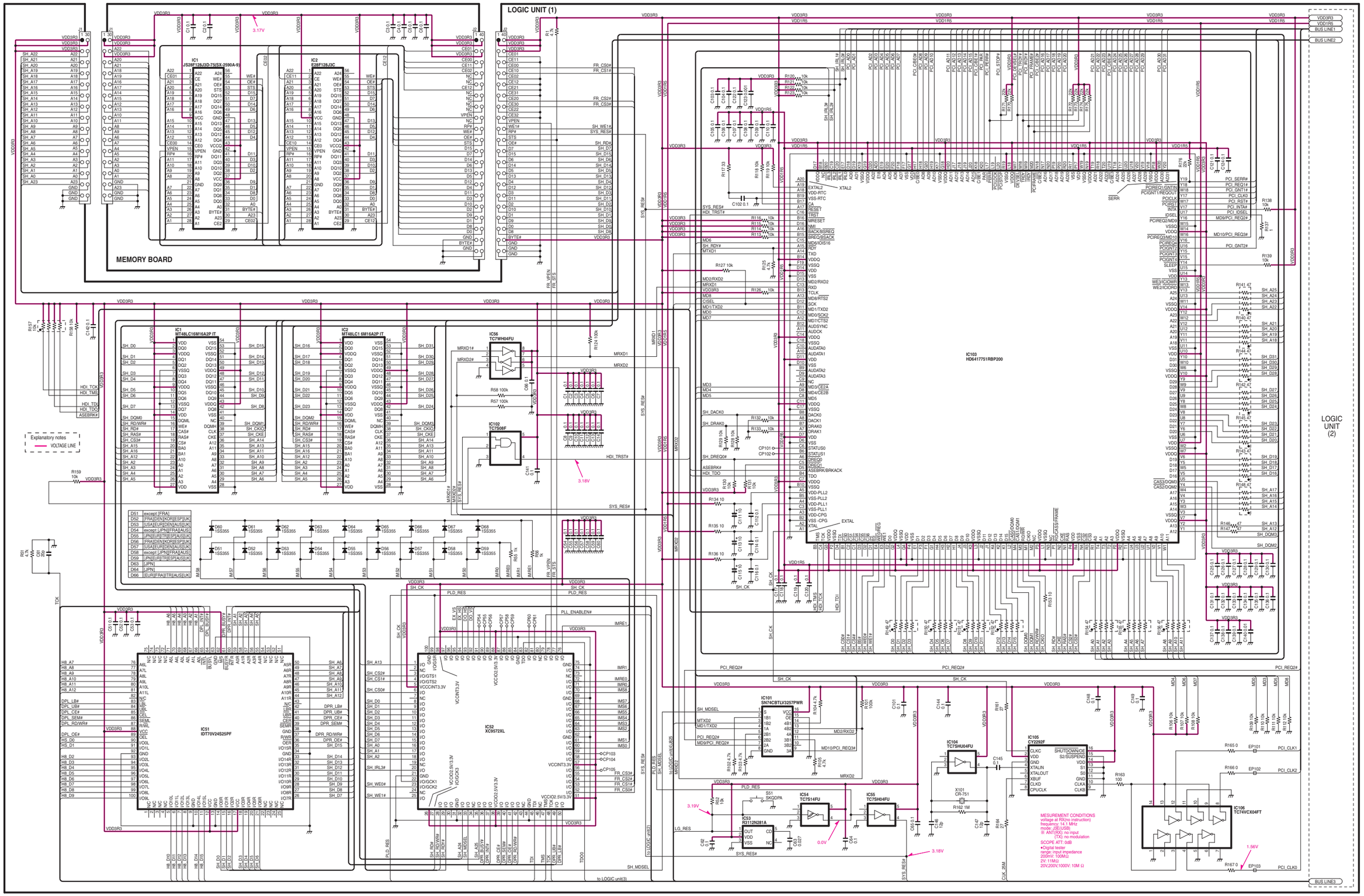


| | |
|---|---|
| DS1 | except [FRA] |
| DS2 | [FRA]/[DEN]/[KOR]/[ESP]/[UK] |
| DS3 | [USA]/[EUR]/[DEN]/[AUS]/[UK] |
| DS4 | except [JPN]/[FRA]/[AUS] |
| DS5 | [JPN]/[EUR]/[TR]/[SPA]/[AUS]/[UK] |
| DS6 | [FRA]/[DEN]/[KOR]/[ESP]/[UK] |
| DS7 | [USA]/[EUR]/[DEN]/[AUS]/[UK] |
| DS8 | except [JPN]/[FRA]/[AUS] |
| DS9 | [JPN]/[EUR]/[TR]/[SPA]/[AUS]/[UK] |
| D63 | [JPN] |
| D64 | [JPN] |
| D66 | [EUR]/[FRA]/[TR]/[AUS]/[UK] |

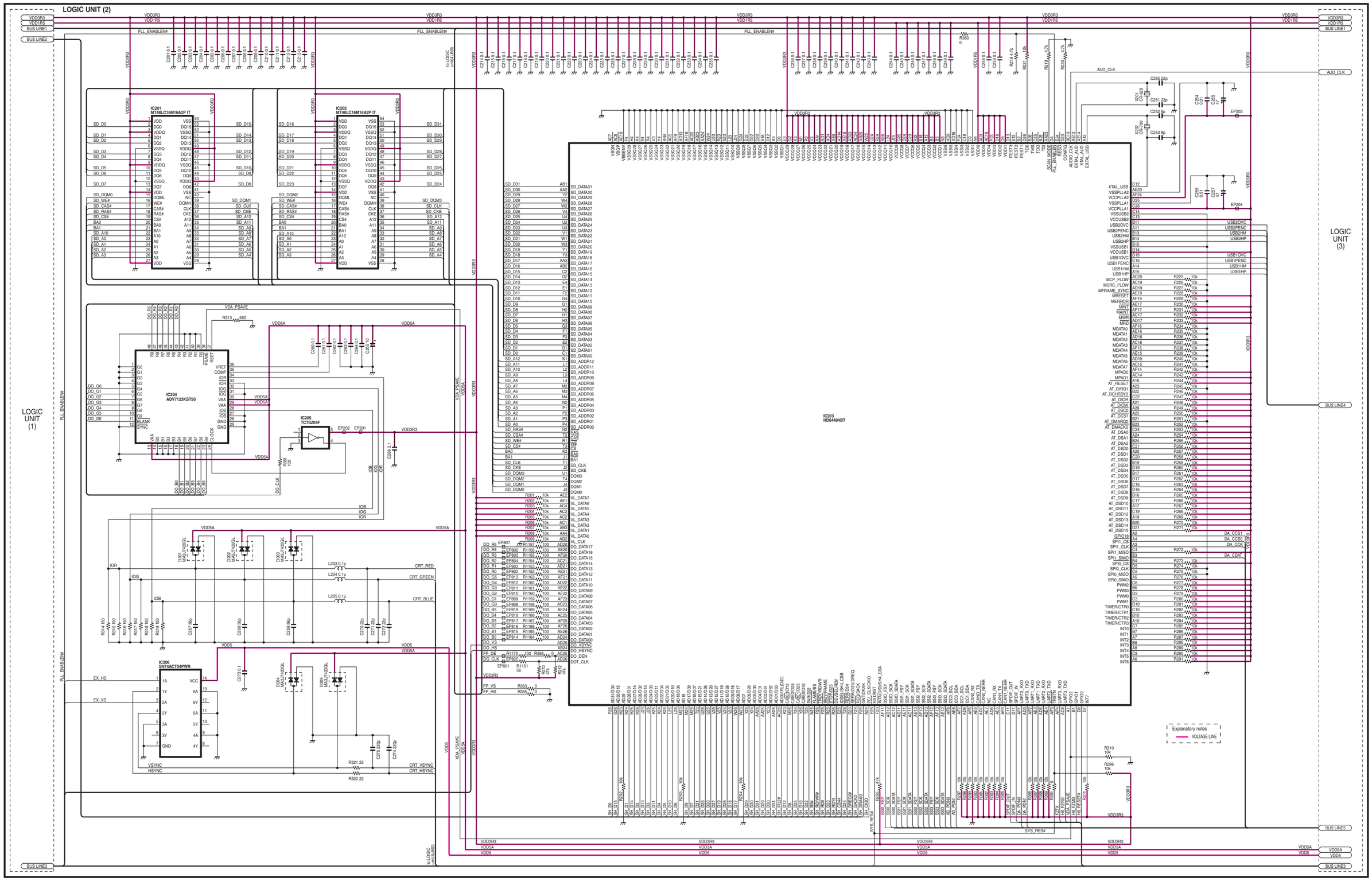
LOGIC UNIT (2)
LOGIC UNIT (1)
LOGIC UNIT (3)
IC201 MT48LC16M16A2P-IT
IC202 MT48LC16M16A2P-IT
IC203 HD64404BT
IC204 ADV7123KST50
IC205 TC7SZ04F
IC206 SN74ACT04PWR
Explanatory notes
VOLTAGE LINE

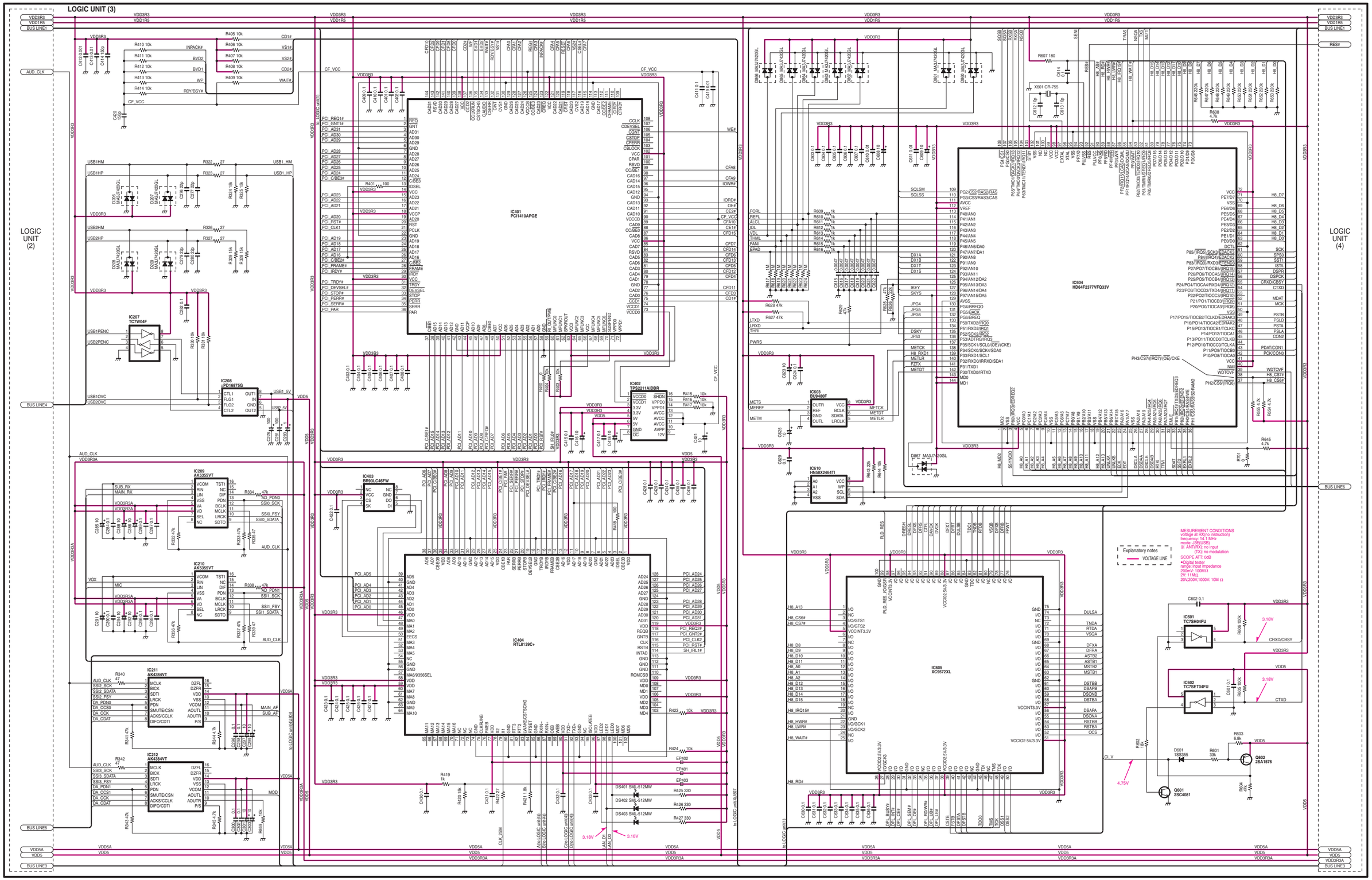
LOGIC UNIT (3)
LOGIC UNIT (2)
LOGIC UNIT (4)
IC401 PCI1410APGE
IC402 TPS2211AIDBR
IC403 BR93LC46FW
IC404 RTL8139C+
IC603 BU9480F
IC604 HD64F2377VFQ33V
IC605 XC9572XL
IC610 HN58X2464TI
IC207 TC7W04F
IC208 μPD16875G
IC209 AK5355VT
IC210 AK5355VT
IC211 AK4384VT
IC212 AK4384VT
IC601 TC7SH04FU
IC602 TC7SET04FU
Q601 2SC4081
Q602 2SA1576
MESUREMENT CONDITIONS
voltage at RX(no instruction)
frequency: 14.1 MHz
mode: J3E(USB)
※ ANT(RX): no input
(TX): no modulation
SCOPE ATT: 0dB
•Digital tester
range: input impedance
200mV: 100MΩ
2V: 11MΩ
20V,200V,1000V: 10M Ω
Explanatory notes
VOLTAGE LINE
BUS LINE1
BUS LINE2
BUS LINE3
BUS LINE4
BUS LINE5
BUS LINE6
AUD_CLK
CF_VCC
VDD3R3
VDD1R5
VDD5
VDD5A
VDD3R3A
3.18V
4.75V
CLK_25M

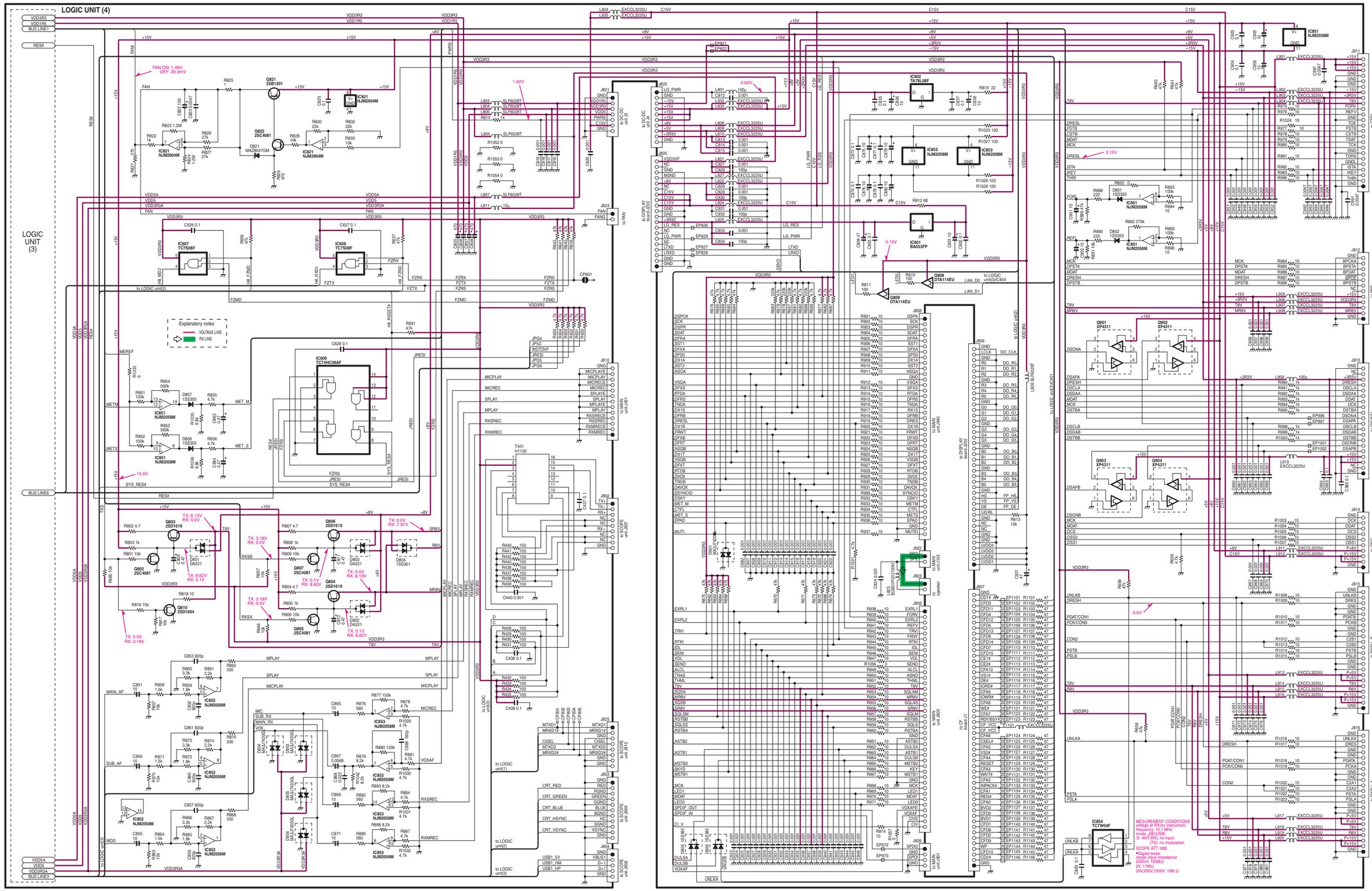
LOGIC UNIT (4)
LOGIC UNIT (3)
Explanatory notes
VOLTAGE LINE
RX LINE
FAN ON: 1.49V
OFF: 20.9mV
IC607 TC7S08F
IC608 TC7S08F
IC609 TC74HC08AF
IC821 NJM2904M
IC851 NJM2058M
IC852 NJM2058M
IC853 NJM2058M
Q821 2SB1201
Q822 2SC4081
Q803 2SD1619
Q804 2SD1619
Q806 2SD1619
Q807 2SC4081
Q802 2SC4081
Q805 2SC4081
Q810 2SD1664
IC802 TA78L08F
IC801 BA033FP
IC852 NJM2058M
IC853 NJM2058M
IC851 NJM2058M
Q808 DTA114EU
Q809 DTA114EU
Q801 XP4311
Q902 XP4311
Q903 XP4311
Q904 XP4311
IC854 TC7W04F
1.92V
0.02V
3.15V
TX: 8.13V RX: 0.0V
TX: 3.18V RX: 0.0V
TX: 8.82V RX: 0.1V
TX: 0.0V RX: 8.19V
TX: 0.1V RX: 8.82V
TX: 0.0V RX: 3.18V
TX: 0.0V RX: 7.97V
15.0V
MESUREMENT CONDITIONS
voltage at RX(no instruction)
frequency: 14.1 MHz
mode: J2E(USB)
※: ANT(RX): no input
(TX): no modulation
SCOPE ATT: 0dB
•Digital tester
range: input impedance
200mV: 10MΩ
2V: 11MΩ
20V,200V,1000V: 10M Ω
to CTRL board J1
to BPF unit J1
to DISPLAY board J203
to DC-DC unit J4
to DC-DC unit J5
to FAN
to MAIN unit J401
to MAIN unit J940
to MAIN unit J942
to MAIN unit J800
to MAIN unit J801
to LOGIC unit(3)
to LOGIC unit(2)
to LOGIC unit(1)
to SCOPE unit J956
to SCOPE unit J957
to SCOPE unit J958
to SCOPE unit J959
to SCOPE unit J960
to DIGSEL unit J10
to OSC unit J2
to RXPLL-B unit J2
to RXPLL-A unit J2
to DF board J1
to speaker
to LOGIC unit(3) IC401
to LOGIC unit(2)
LAN_D0
LAN_D1
DO_CLK
DO_R0
DO_R1
DO_R2
DO_R3
DO_R4
DO_R5
DO_G0
DO_G1
DO_G2
DO_G3
DO_G4
DO_G5
DO_B0
DO_B1
DO_B2
DO_B3
DO_B4
DO_B5
FP_HS
FP_VS
FP_DE
VDD3R3
VDD1R5
VDD5A
VDD5
VDD3R3A
BUS LINE1
BUS LINE3
BUS LINE6
RES#
SYS_RES#
MAIN_AF
SUB_AF
MOD
MET_M
MET_S
MICPLAY
MICREC
SPLAY
MPLAY
RXSREC
RXMREC
CRT_RED
CRT_GREEN
CRT_BLUE
CRT_HSYNC
CRT_VSYNC
USB1_5V
USB1_HM
USB1_HP
VOXAF
MUTI
EXRL1
EXRL2
TRVI
RTKI
IDL
SENI
VDL
SEND
ALCL
TRAS
THML
SQSA
SQSLM
RSTBB
SQLSS
RSTBA
ASTB2
ASTB1
MSTB2
SKYS
MSTB1
LED1
MDAT
LED0
SPDIF_OUT
SPDIF_IN
CI_V
DULSA
DULSB
VOXAF
DSPCK
SCK
DSPR
SDAT
DFRA
SST1
DFXA
SPS0
DX1A
SST2
NSOA
VSQA
DFXS
RTDA
DFRS
TNDA
DX1S
DFRB
DRES
DX1B
FRWT
DFXB
DFRT
NSQB
DX1T
VSQB
DFXT
RTDB
DVDX
TNDB
DAVDX
SSYNCIO
DSKY
METM
CTFL
METS
EPAD
GND
MUTEI
DRESL
FSTB
CSTB
MDAT
MCK
DRESL
ISTA
IKEY
THRI
FORV
REFV
MCK
DPSTA
MDAT
DRESH
DPSTB
MRSV
DSONA
DSAPA
DRESH
DSCLA
DSDAA
MDAT
MCK
DSTBA
DSONB
DSAPB
MCK
MDAT
NC
OCS
OSS2
OSS1
UNLKB
DRESH
PDAT/CON1
PCK/CON0
CON2
PSTB
PSLB
UNLKA
DRESH
PDAT/CON1
PCK/CON0
CON2
PSTA
PSLA
T401 H1102
L834 EXCCL3225U
L835 EXCCL3225U
EP821
EP822
EP826
EP829
EP827
EP828
EP972
EP973
EP996
EP997
EP1001
EP1002
C15V
+15V
+8V
+5V
+3R3V
−15V
+385V
VDD5A
VDD5
VDD3R3A
BUS LINE3
BUS LINE6
RES#
SYS_RES#
FZRS
FZRX
FZTX
FZMD
JRESI
MPLAY
SPLAY
MICPLAY
MICREC
RXSREC
RXMREC
MRBV
T8V
TXS
RXSB
RXSA
SR8V
R8V
MRBV
MCPLAY
MICREC
SPLAY
MPLAY
RXSREC
RXMREC
VDD3R3
VDD1R5
VDD5A
VDD5
VDD3R3A
BUS LINE3
RES#
MAIN_AF
SUB_AF
MOD
MET_M
MET_S
MICPLAY
MICREC
SPLAY
MPLAY
RXSREC
RXMREC
CRT_RED
CRT_GREEN
CRT_BLUE
CRT_HSYNC
CRT_VSYNC
USB1_5V
USB1_HM
USB1_HP
VOXAF
MUTI
EXRL1
EXRL2
TRVI
RTKI
IDL
SENI
VDL
SEND
ALCL
TRAS
THML
SQSA
SQSLM
RSTBB
SQLSS
RSTBA
ASTB2
ASTB1
MSTB2
SKYS
MSTB1
LED1
MDAT
LED0
SPDIF_OUT
SPDIF_IN
CI_V
DULSA
DULSB
VOXAF
UNLKA
DSPCK
SCK
DSPR
SDAT
DFRA
SST1
DFXA
SPS0
DX1A
SST2
NSOA
VSQA
DFXS
RTDA
DFRS
TNDA
DX1S
DFRB
DRES
DX1B
FRWT
DFXB
DFRT
NSQB
DX1T
VSQB
DFXT
RTDB
DVDX
TNDB
DAVDX
SSYNCIO
DSKY
METM
CTFL
METS
EPAD
GND
MUTEI
DRESL
FSTB
CSTB
MDAT
MCK
DRESL
ISTA
IKEY
THRI
FORV
REFV
MCK
DPSTA
MDAT
DRESH
DPSTB
MRSV
DSONA
DSAPA
DRESH
DSCLA
DSDAA
MDAT
MCK
DSTBA
DSONB
DSAPB
MCK
MDAT
NC
OCS
OSS2
OSS1
UNLKB
DRESH
PDAT/CON1
PCK/CON0
CON2
PSTB
PSLB
UNLKA
DRESH
PDAT/CON1
PCK/CON0
CON2
PSTA
PSLA

MAIN UNIT (1)

MAIN UNIT (2)

BUS LINE1 BUS LINE2 BUS LINE3 BUS LINE4

Explanatory notes
VOLTAGE LINE
TX LINE
RX LINE

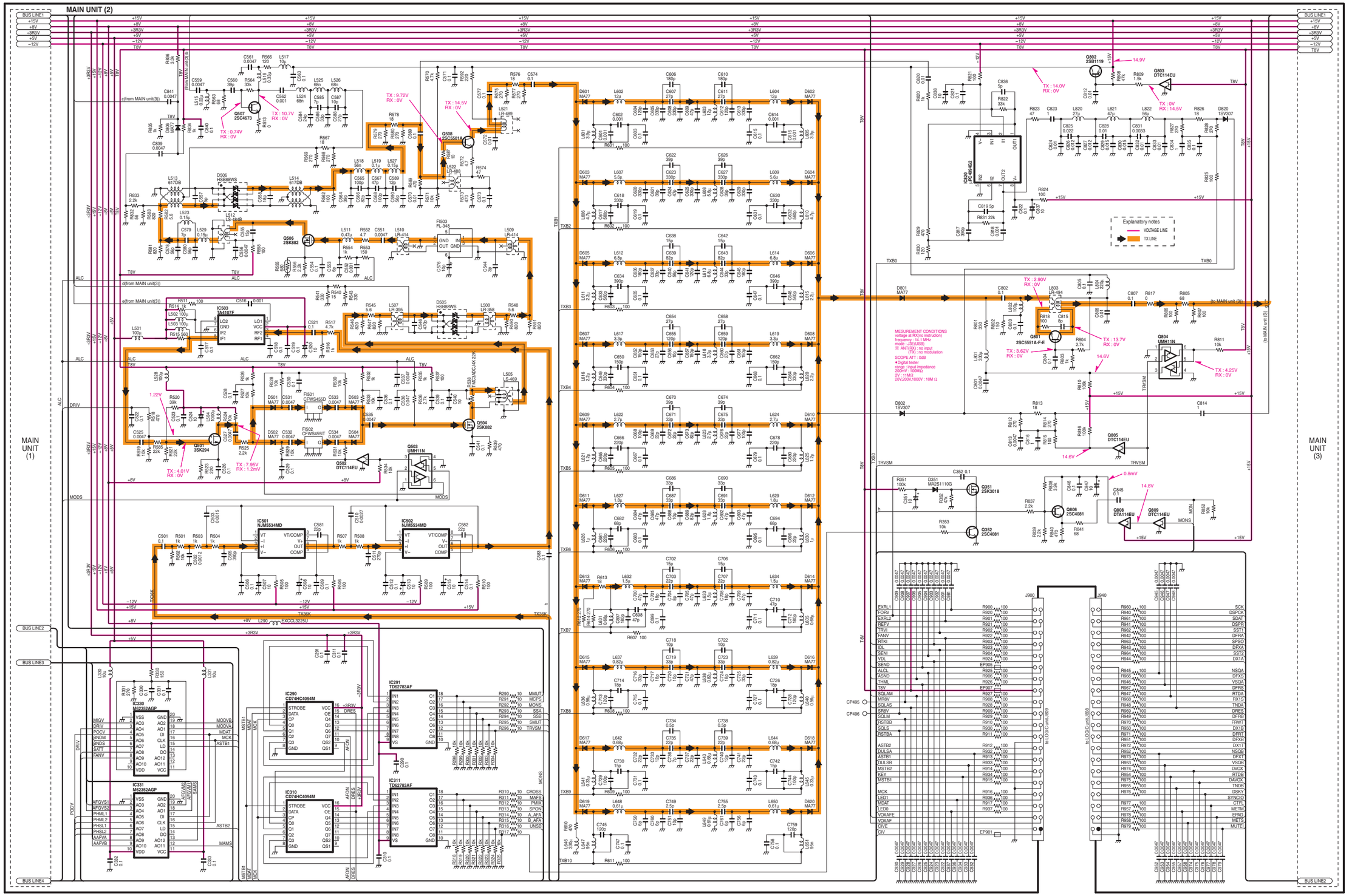
MAIN UNIT (2)
MAIN UNIT (1)
MAIN UNIT (3)
BUS LINE1
BUS LINE2
BUS LINE3
BUS LINE4
Explanatory notes
VOLTAGE LINE
TX LINE
MEASUREMENT CONDITIONS
voltage at RX(no instruction)
frequency : 14.1 MHz
mode : J3E(USB)
※ ANT(RX) : no input
[TX] : no modulation
SCOPE ATT : 0dB
●Digital tester
range , input impedance
200mV : 10MΩ
2V : 11MΩ
20V,200V,1000V : 10M Ω
TX : 0.74V RX : 0V
TX : 10.7V RX : 0V
TX : 9.72V RX : 0V
TX : 14.5V RX : 0V
TX : 14.0V RX : 0V
TX : 0V RX : 14.5V
TX : 2.90V RX : 0V
TX : 13.7V RX : 0V
TX : 3.62V RX : 0V
TX : 4.25V RX : 0V
TX : 4.01V RX : 0V
TX : 7.95V RX : 1.2mV
1.22V
14.9V
14.6V
14.8V
0.8mV
IC503 TA1107F
IC330 M62352AGP
IC331 M62352AGP
IC290 CD74HC4094M
IC310 CD74HC4094M
IC291 TD62783AF
IC311 TD62783AF
IC501 NJM5534MD
IC502 NJM5534MD
IC520 BA3404G2
Q501 3SK294
Q502 DTC114EU
Q503 UMH11N
Q504 2SK882
Q505 DTC114EU
Q506 2SK882
Q507 2SC4673
Q508 2SC5501A
Q801 2SC5551A-F-E
Q802 2SB1119
Q803 DTC114EU
Q804 UMH11N
Q805 DTC114EU
Q806 2SC4081
Q808 DTA114EU
Q809 DTC114EU
Q351 2SK3018
Q352 2SC4081
D506 HSB88WS
D505 HSB88WS
D507 HVC363ADCL-4K-22P
FI501 CFWS455D
FI502 CFWS455T
FI503 FL-348
L512 LS-484B
L521 LR-489
L522 LR-489
L505 LS-469
L509 LR-414
L510 LR-414
L507 LR-395
L508 LR-358
L803 LR-494
L804 220μ
L805 3.9μ
L806 3.9μ
L807 2.2μ
L808 2.2μ
L809 2.2μ
L810 4.7μ
L811 2.2μ
L812 2.2μ
L813 3.3μ
L814 3.3μ
L815 2.2μ
L816 2.2μ
L817 3.3μ
L818 3.3μ
L819 3.3μ
L820 3.3μ
L821 3.3μ
L822 3.3μ
L823 3.3μ
L824 3.3μ
L825 1.2μ
L826 1.2μ
L827 1.2μ
L828 1.2μ
L829 1.8μ
L830 1.8μ
L831 1.8μ
L832 1.8μ
L833 1.8μ
L834 1.8μ
L835 0.68μ
L836 0.68μ
L837 0.68μ
L838 0.68μ
L839 0.68μ
L840 0.68μ
L841 0.68μ
L842 0.68μ
L843 0.68μ
L844 0.68μ
L845 0.68μ
L846 0.68μ
L847 0.68μ
L848 0.68μ
L849 0.68μ
L850 0.68μ
L851 95n
L852 95n
L853 95n
L854 95n
L855 95n
L856 95n
L857 95n
L858 95n
L859 95n
L860 95n
L861 95n
L862 95n
L863 95n
L864 95n
L865 95n
L866 95n
L867 95n
L868 95n
L869 95n
L870 95n
L871 95n
L872 95n
L873 95n
L874 95n
L875 95n
L876 95n
L877 95n
L878 95n
L879 95n
L880 95n
L881 95n
L882 95n
L883 95n
L884 95n
L885 95n
L886 95n
L887 95n
L888 95n
L889 95n
L890 EXCCL3225U
D801 MA77
D802 1SV307
D351 MA2S1110G
D601 MA77
D602 MA77
D603 MA77
D604 MA77
D605 MA77
D606 MA77
D607 MA77
D608 MA77
D609 MA77
D610 MA77
D611 MA77
D612 MA77
D613 MA77
D614 MA77
D615 MA77
D616 MA77
D617 MA77
D618 MA77
D619 MA77
D620 MA77
D820 1SV307
IC520 BA3404G2
J900
J940
to LOGIC unit(J908)
to LOGIC unit(J909)
to MAIN unit (3)
from MAIN unit(3)
MESUREMENT CONDITIONS
voltage at RX(no instruction)
frequency : 14.1 MHz
mode : J3E(USB)
※ ANT(RX) : no input
[TX] : no modulation
SCOPE ATT : 0dB
●Digital tester
range , input impedance
200mV : 10MΩ
2V : 11MΩ
20V,200V,1000V : 10M Ω

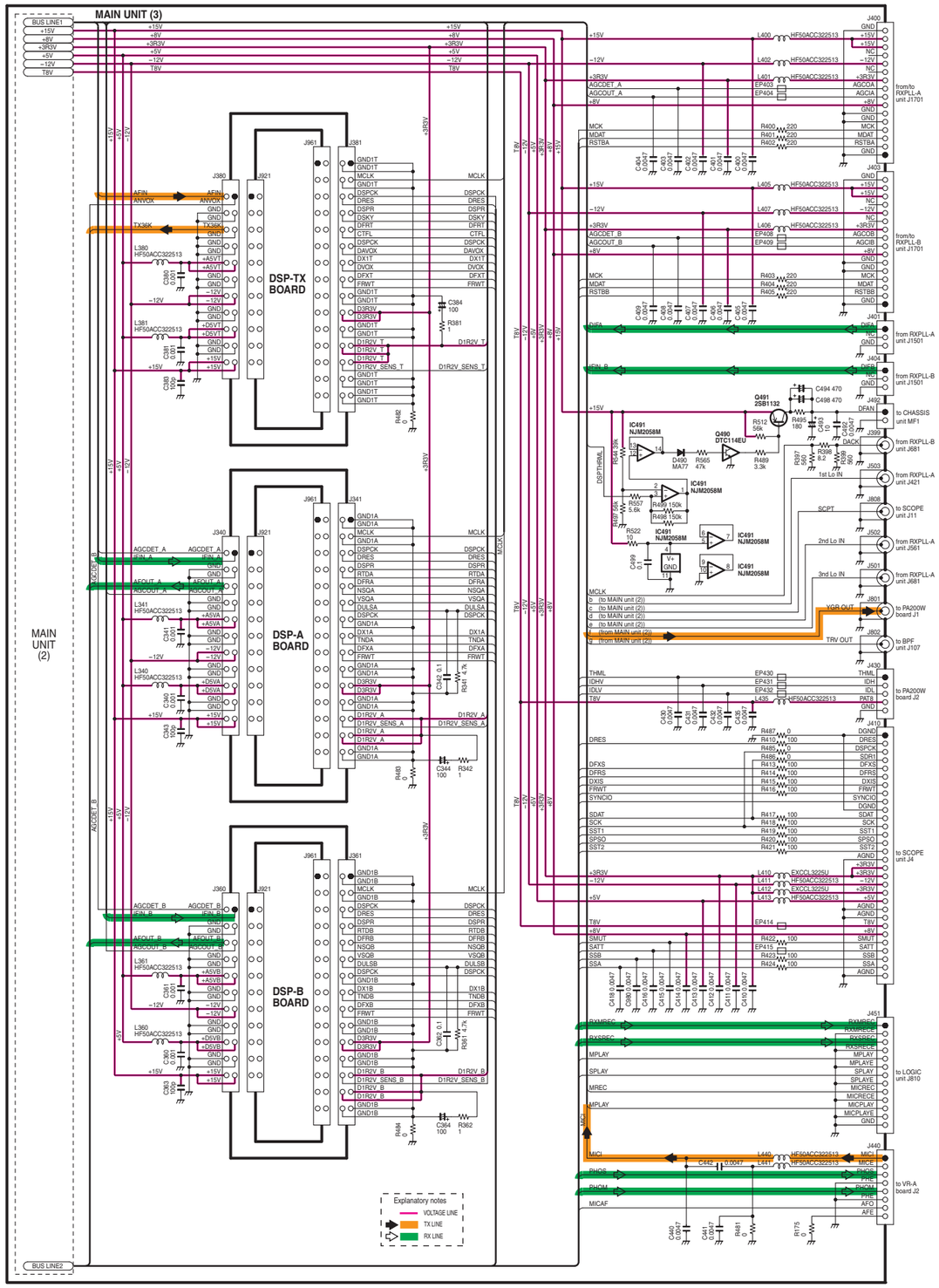
MAIN UNIT (3)
BUS LINE1
DSP-TX BOARD
DSP-A BOARD
DSP-B BOARD
MAIN UNIT (2)
BUS LINE2
Explanatory notes
VOLTAGE LINE
TX LINE
RX LINE
to/from RXPLL-A unit J1701
to/from RXPLL-B unit J1701
from RXPLL-A unit J1501
from RXPLL-B unit J1501
to CHASSIS unit MF1
from RXPLL-B unit J681
from RXPLL-A unit J421
to SCOPE unit J11
from RXPLL-A unit J561
from RXPLL-A unit J681
to PA200W board J1
to BPF unit J107
to PA200W board J2
to SCOPE unit J4
to LOGIC unit J810
to VR-A board J2

## DIGISEL UNIT (A)

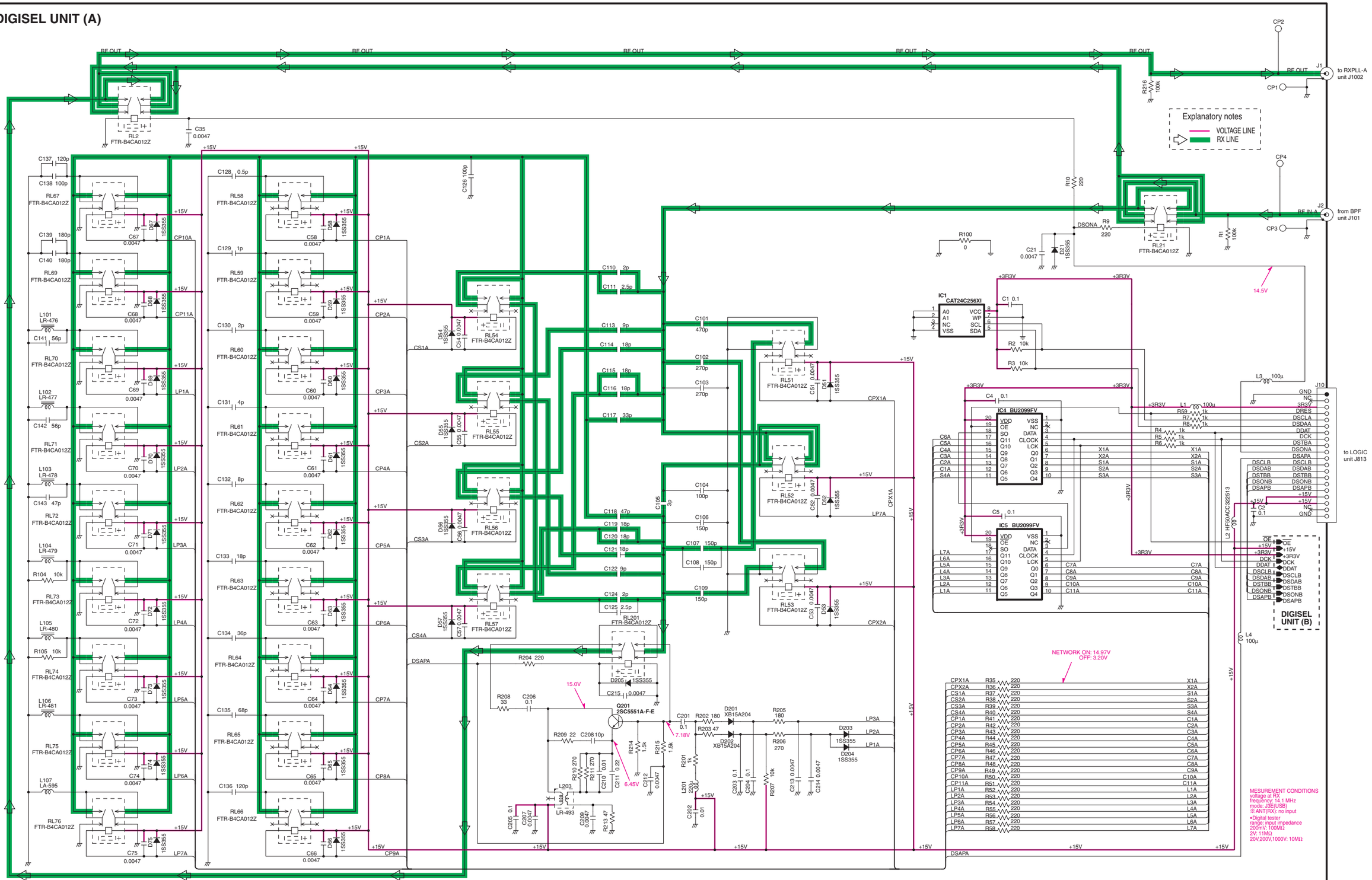

## DIGISEL UNIT (B)

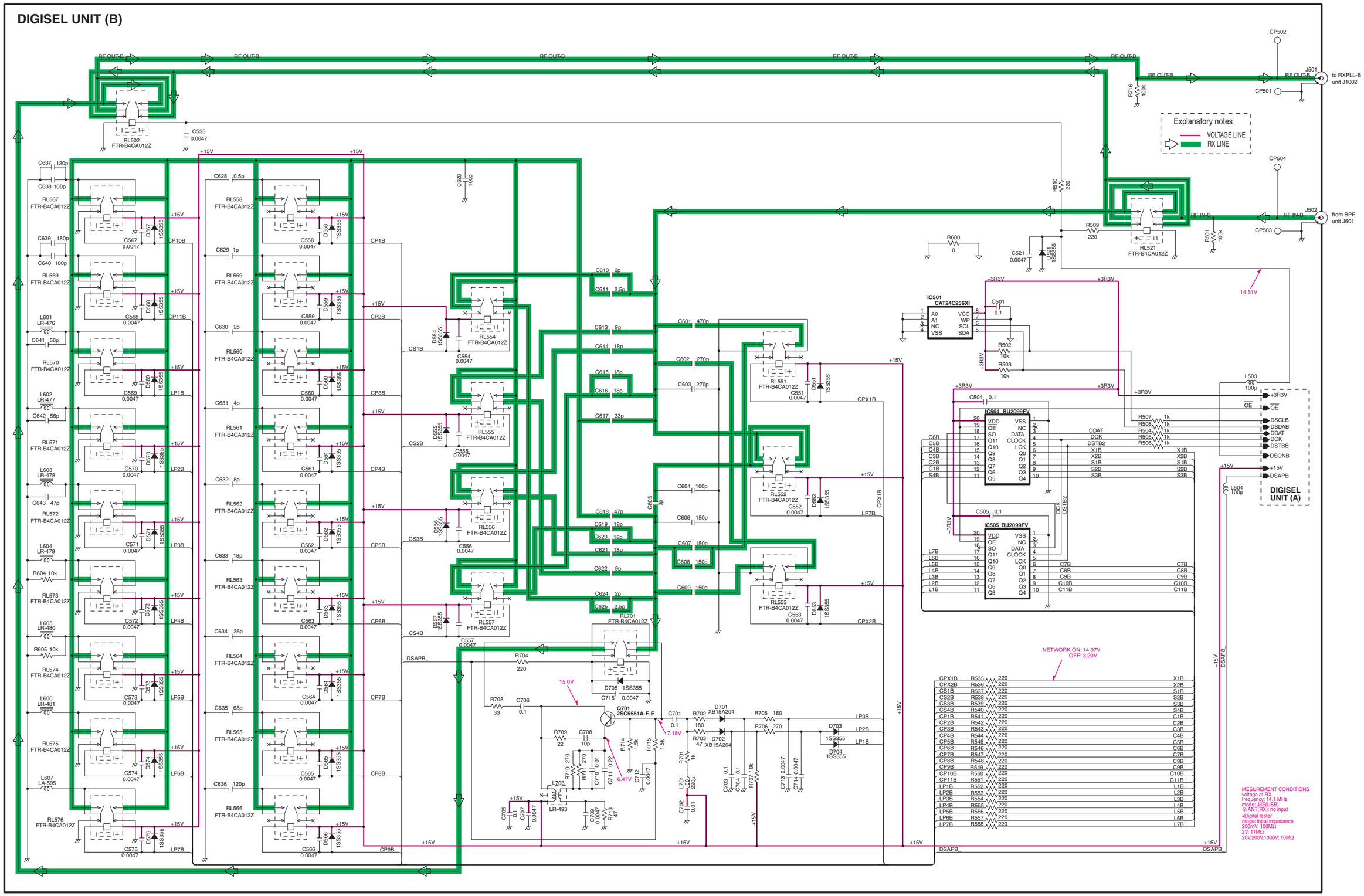

## OSC UNIT

to RXPLL-B unit J10 — J73 — S10M

to RXPLL-A unit J10 — J72 — M10M

~0.6dBm (high frequency voltage tester 50Ω terminal)

C76 0.0047 — R82 47 — C72 0.0047 — R75 47

Q70 2SC4081 — C74 0.0047 — R78 1.8k — R77 100 — C77 0.1 — C73 0.0047 — C75 0.0047 — R79 2.2k — R80 220

C8 0.1 — L20 00 330µ — R20 22 — C21 0.1 — R21 10k

75m — 0V

RL11 FTR-B4CA012Z — D11 MA2S1110G — C18 0.1 — R12 10 — C17 0.1 — Q11 DTC114EU — C67 0.1

IC10 BA12FP — 12.02V — L10 HF50ACC322513 — C10 22 — C11 0.1 — C15 0.1 — C12 0.0047 — C13 22 — C14 0.0047

X1 CR-772. — 5.00V — 10.21V — C20 0.1

Q21 2SC4081 — C22 0.1 — R23 4.7 — 5.00V — R22 270

Q22 2SC4215 — R27 220 — R25 3.3k — L22 00 100µ — L21 00 100µ — C24 0.1 — C33 0.1 — R24 270 — R26 2.2k — C23 0.1 — R28 1k

C25 0.1 — L23 00 0.68µ — L24 00 0.82µ — C26 560p — C27 82p — C28 470p — C29 330p — C30 22p — C31 560p

Q23 DTC114EU — C32 0.1

Q12 DTC114EU — R61 22 — C62 0.1 — R62 10k — C61 0.1 — Q61 2SC4081 — C63 0.1 — R64 47 — R63 330 — R67 18k — R68 0.2k — Q62 2SC4081 — R65 470 — C64 0.1 — C66 10p — L61 LS-476 — L62 LS-476

RL10 FTR-B4CA012Z — R11 10 — 2.91V — D10 MA2S1110G — C19 0.1 — Q10 DTC114EU — C16 0.1

Q42 2SC4215 — C42 0.1 — R43 22 — R45 3.3k — R47 56 — L42 00 100µ — L41 00 100µ — C44 0.1 — C53 0.1 — R44 270 — R46 2.2k — C43 0.1 — R13 1k

C45 0.1 — L43 00 0.68µ — L44 00 0.82µ — C47 82p — C50 22p — C46 560p — C48 470p — C49 390p — C51 560p

R102 33k — L91 00 HF50ACC322513 — C91 0.0047 — R91 8.2k — R92 3.3k — C92 0.0047

IC91 AD5260BRU50 — A W B VDD SHDN CLK SDI — SDO NC VL VSS GND PR CS — C94 0.0047

IC92 TC7W04F — 47k R98 — 1k R97 — 1k R96 — 100 R95 — 2.2k R99 — C93 0.0047 — R93 10k — R94 6.8k — R100 47k

Q43 DTC114EU — C52 0.1

Q13 DTC114EU

Q101 2SC4097 — R101 220 — C101 4.7

CP71 — C71 0.0047 — R72 39 — R71 150 — R73 150 — D71 1SS312 — D72 1SS312

ODAT OCK — ODAT OCK — ODAT OCK

L92 00 HF50ACC322513

to MAIN unit J491 — J71 — REF_IN/OUT

OCK ODAT

R3 1k — R2 1k — R1 1k — L2 00 HF50ACC322513 — L1 00 HF50ACC322513 — C9 0.0047 — C2 0.0047 — C3 0.0047 — C1 0.0047

J2 — GND OCK ODAT OCS OSS2 OSS1 P+8V P+15V P+15V GND — to LOGIC unit J814

Explanatory notes — VOLTAGE LINE

MESUREMENT CONDITIONS
voltage at RX
frequency: 14.1 MHz
mode: J3E(USB)
※ ANT(RX): no input

•Digital tester range: input impedance
200mV: 100MΩ
2V: 11MΩ
20V,200V,1000V: 10MΩ

# RXPLL-A/B UNIT (1)

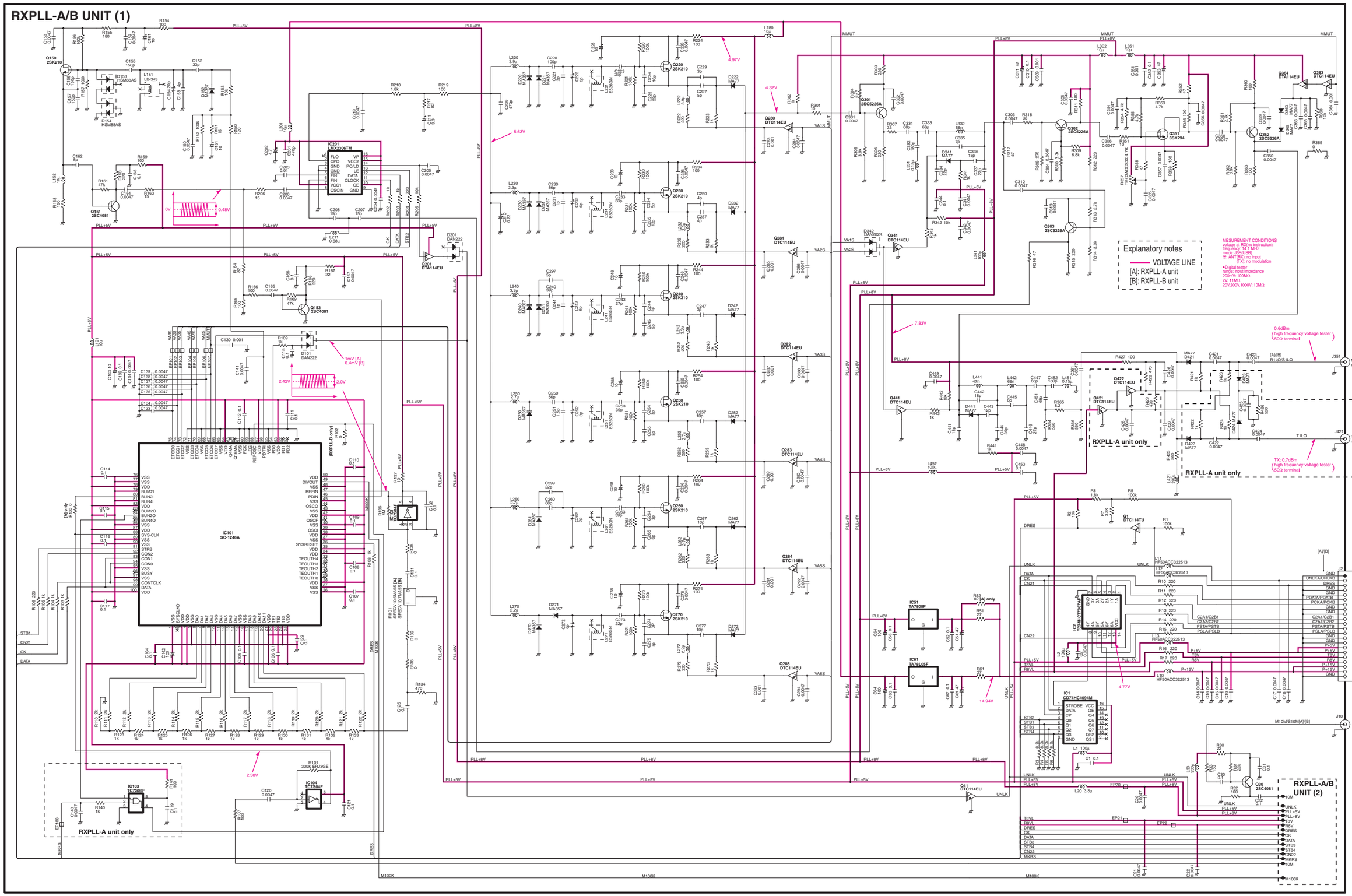

# RXPLL-A/B UNIT (2)

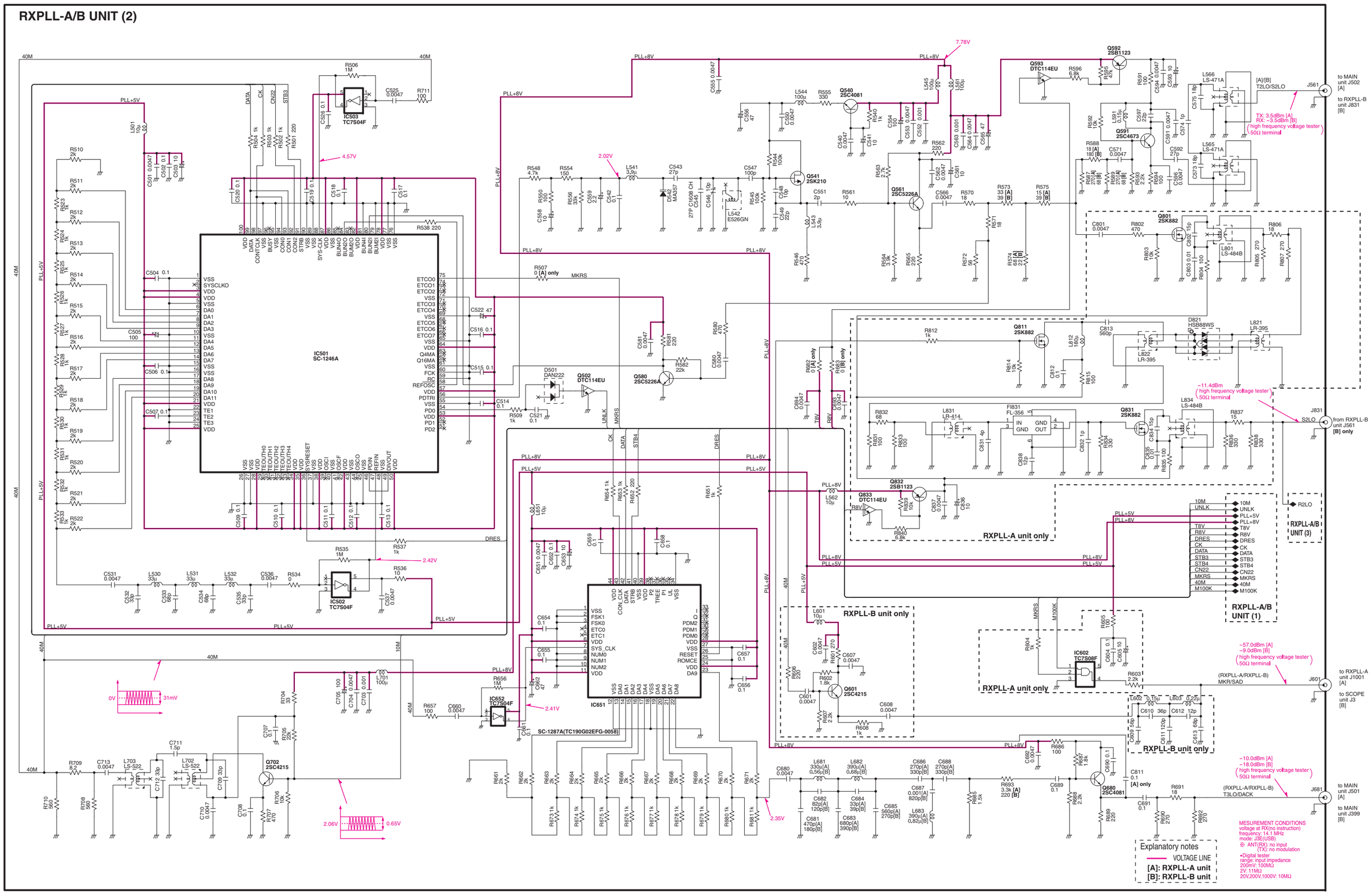

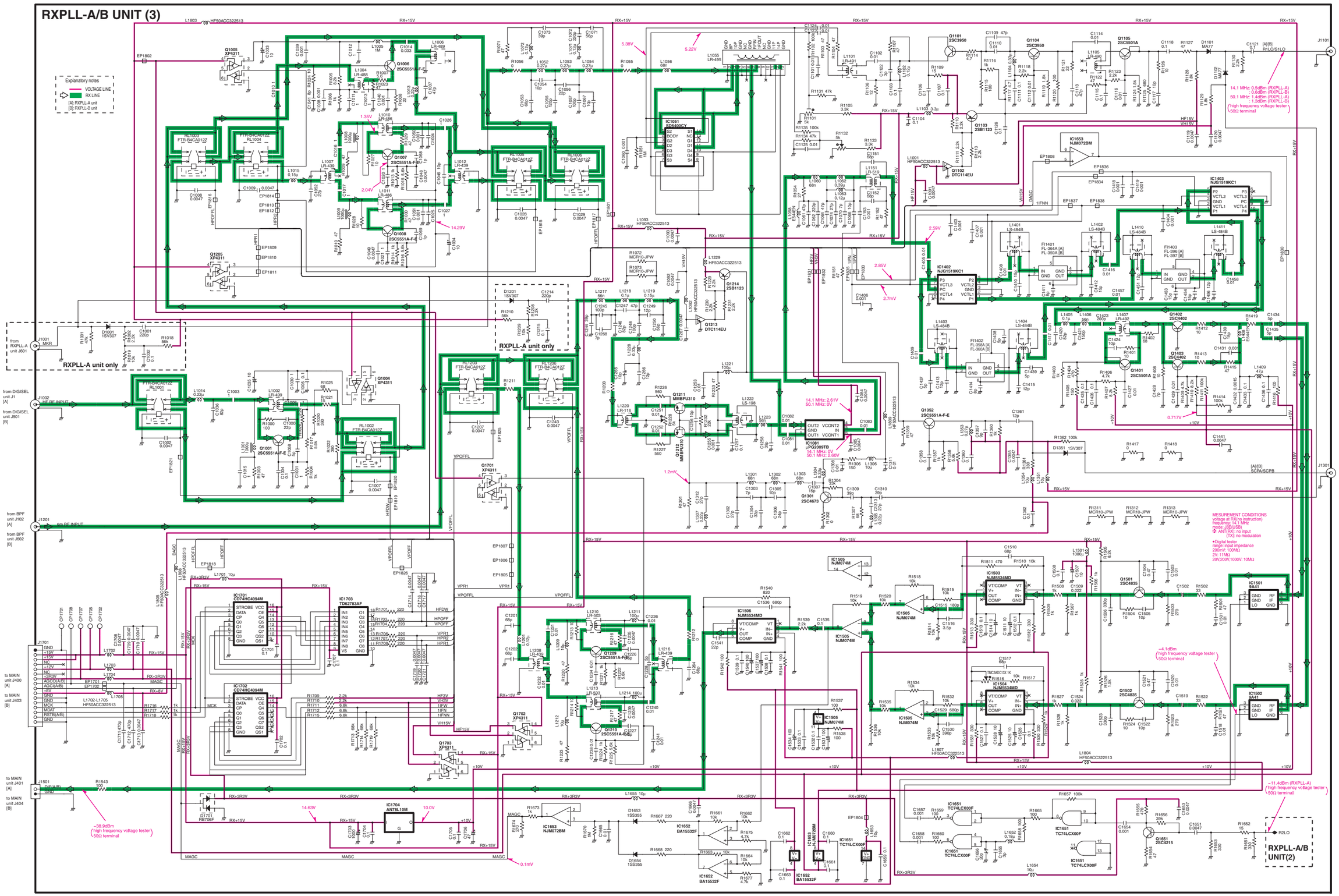
RXPLL-A/B UNIT (3)
RXPLL-A unit only
RXPLL-A unit only
RXPLL-A/B UNIT(2)
Explanatory notes
VOLTAGE LINE
RX LINE
[A]: RXPLL-A unit
[B]: RXPLL-B unit
from RXPLL-A unit J601
from DIGISEL unit J1 [A]
from DIGISEL unit J501 [B]
from BPF unit J102 [A]
from BPF unit J602 [B]
to MAIN unit J400 [A]
to MAIN unit J403 [B]
to MAIN unit J401 [A]
to MAIN unit J404 [B]
from RXPLL-A/B unit J351
to SCOPE unit J1 [A]
to SCOPE unit J2 [B]
14.1 MHz: 0.5dBm (RXPLL-A)
: 0.6dBm (RXPLL-B)
50.1 MHz: 1.4dBm (RXPLL-A)
: 1.3dBm (RXPLL-B)
(high frequency voltage tester 50Ω terminal)
MESUREMENT CONDITIONS
voltage at RX(no instruction)
frequency: 14.1 MHz
mode: JSE(USB)
ANT(RX): no input
(TX): no modulation
Digital tester
range: input impedance
200mV: 100MΩ
2V: 11MΩ
20V,200V,1000V: 10MΩ
-4.1dBm
(high frequency voltage tester 50Ω terminal)
-11.4dBm (RXPLL-A)
(high frequency voltage tester 50Ω terminal)
-38.9dBm
(high frequency voltage tester 50Ω terminal)
14.1 MHz: 2.61V
50.1 MHz: 0V
14.1 MHz: 0V
50.1 MHz: 2.60V
14.1 MHz: 2.61V
50.1 MHz: 0V
14.1 MHz: 0V
50.1 MHz: 2.60V
0.717V
14.63V
10.0V
0.1mV
5.38V
5.22V
2.59V
2.85V
2.7mV
1.2mV
1.35V
2.04V
14.29V
RX+15V
RX+3R3V
MAGC
+10V
VPOFFL
VPR1
HF15V
VH15V
HF3V
VH3V
1IFNN
HF50ACC322513
RX-3R3V
R2LO

Aug. 2008

# SERVICE MANUAL ADDENDUM

## IC-7800

**CONTENTS**

PARTS LIST . . . . . 1
BOARD LAYOUTS . . . . . 57
VOLTAGE DIAGRAM . . . . . 59

# PARTS LIST

## [REPLACEMENT UNITS]

| ORDER NO. | UNIT NAME |
|---|---|
| 0325900101 | U 7800 BPF |
| 0325900102 | U 7800 RXPLL-A |
| 0325900103 | U 7800 RXPLL-B |
| 0325900104 | U 7800 FILTER |
| 0325900105 | U 7800 DIDSEL |
| 0325900106 | U 7800 DC-DC |
| 0325900107 | U 7800 OSC |
| 0325900108 | U 7800 PA |
| 0325900109 | U 7800 TUNER |
| 0325900110 | U 7800 FRONT |

## [VR-A BOARD]

| REF NO. | ORDER NO. | DESCRIPTION | M. | H/V LOCATION |
|---|---|---|---|---|
| R1 | 7210002890 | VAR RK161221005J/RV-308 | | |
| R2 | 7210002890 | VAR RK161221005J/RV-308 | | |
| R3 | 7210002890 | VAR RK161221005J/RV-308 | | |
| R4 | 7210002890 | VAR RK161221005J/RV-308 | | |
| R11 | 7030003520 | S.RES ERJ3GEYJ 472 V (4.7 k) | B | 44.6/27 |
| R12 | 7030003520 | S.RES ERJ3GEYJ 472 V (4.7 k) | B | 44.6/25.7 |
| R13 | 7030003520 | S.RES ERJ3GEYJ 472 V (4.7 k) | B | 59.4/29.9 |
| R14 | 7030003520 | S.RES ERJ3GEYJ 472 V (4.7 k) | B | 44.6/24.4 |
| R15 | 7030003520 | S.RES ERJ3GEYJ 472 V (4.7 k) | B | 44.6/21.8 |
| R16 | 7030003520 | S.RES ERJ3GEYJ 472 V (4.7 k) | B | 44.6/23.1 |
| R17 | 7030003520 | S.RES ERJ3GEYJ 472 V (4.7 k) | B | 63.2/9.5 |
| R18 | 7030003520 | S.RES ERJ3GEYJ 472 V (4.7 k) | B | 44.6/20.5 |
| R21 | 7030003860 | S.RES ERJ3GE JPW V | B | 49.7/41.4 |
| R22 | 7030003860 | S.RES ERJ3GE JPW V | B | 52.3/42.4 |
| R23 | 7030003860 | S.RES ERJ3GE JPW V | B | 62.8/42.9 |
| R24 | 7030003860 | S.RES ERJ3GE JPW V | B | 56.4/31.1 |
| R25 | 7030003860 | S.RES ERJ3GE JPW V | B | 52.3/44.4 |
| R26 | 7030003860 | S.RES ERJ3GE JPW V | B | 27.7/10.6 |
| C11 | 4030006880 | S.CER C1608 JB 1H 472K-T | B | 49.7/36.4 |
| C12 | 4030006880 | S.CER C1608 JB 1H 472K-T | B | 65.4/36.9 |
| C13 | 4030006880 | S.CER C1608 JB 1H 472K-T | B | 52.3/37.4 |
| C14 | 4030006880 | S.CER C1608 JB 1H 472K-T | B | 62.8/37.9 |
| C15 | 4030006880 | S.CER C1608 JB 1H 472K-T | B | 49.7/38.4 |
| C16 | 4030006880 | S.CER C1608 JB 1H 472K-T | B | 65.4/38.9 |
| C17 | 4030006880 | S.CER C1608 JB 1H 472K-T | B | 52.3/39.4 |
| C18 | 4030006880 | S.CER C1608 JB 1H 472K-T | B | 62.8/39.9 |
| J1 | 6510021721 | S.CNR 30FLT-SM2-TB (LF) (SN) | B | 57.6/41.1 |
| J2 | 6510018921 | S.CNR B8B-PH-SM4-TB (LF) (SN) | B | 20/4.5 |
| J3 | 6510019971 | S.CNR 52808-1071 | B | 9.5/33.1 |
| J4 | 6510019971 | S.CNR 52808-1071 | B | 9.5/17.9 |
| EP2 | 6910012350 | S.BEA MMZ1608Y 102BT | B | 13.6/29.6 |
| EP3 | 6910012350 | S.BEA MMZ1608Y 102BT | B | 16.5/30.6 |
| EP5 | 6910012350 | S.BEA MMZ1608Y 102BT | B | 16.5/32.6 |
| EP6 | 6910012350 | S.BEA MMZ1608Y 102BT | B | 13.7/34.7 |
| EP7 | 6910012350 | S.BEA MMZ1608Y 102BT | B | 13.7/36.6 |
| EP8 | 6910012350 | S.BEA MMZ1608Y 102BT | B | 16.5/35.7 |
| EP9 | 6910012350 | S.BEA MMZ1608Y 102BT | B | 13.7/33.4 |
| EP10 | 6910012350 | S.BEA MMZ1608Y 102BT | B | 13.6/23.7 |
| EP11 | 6910012350 | S.BEA MMZ1608Y 102BT | B | 13.6/22.4 |
| EP12 | 6910012350 | S.BEA MMZ1608Y 102BT | B | 5.3/21.5 |
| EP13 | 6910012350 | S.BEA MMZ1608Y 102BT | B | 13.6/20.4 |
| EP14 | 6910012350 | S.BEA MMZ1608Y 102BT | B | 5.3/19.3 |
| EP15 | 6910012350 | S.BEA MMZ1608Y 102BT | B | 13.6/18.4 |
| EP16 | 6910012350 | S.BEA MMZ1608Y 102BT | B | 16.1/17.4 |
| EP17 | 6910012350 | S.BEA MMZ1608Y 102BT | B | 13.6/16.4 |
| EP18 | 6910012350 | S.BEA MMZ1608Y 102BT | B | 16.1/15.5 |
| EP19 | 6910012350 | S.BEA MMZ1608Y 102BT | B | 13.6/14.6 |
| EP20 | 6910012350 | S.BEA MMZ1608Y 102BT | B | 12.5/13.2 |
| EP21 | 6910012350 | S.BEA MMZ1608Y 102BT | B | 13.6/25 |

## [VR-B BOARD]

| REF NO. | ORDER NO. | DESCRIPTION | M. | H/V LOCATION |
|---|---|---|---|---|
| R1 | 7210003160 | VAR RV-317 (RK0972210) | | |
| R2 | 7210003160 | VAR RV-317 (RK0972210) | | |
| R3 | 7030003520 | S.RES ERJ3GEYJ 472 V (4.7 k) | T | 28.6/2.7 |
| R4 | 7030003520 | S.RES ERJ3GEYJ 472 V (4.7 k) | T | 27.8/8.4 |
| R5 | 7030003520 | S.RES ERJ3GEYJ 472 V (4.7 k) | T | 10.5/2.7 |
| R6 | 7030003520 | S.RES ERJ3GEYJ 472 V (4.7 k) | T | 11.1/8.4 |
| C1 | 4030006880 | S.CER C1608 JB 1H 472K-T | T | 12.4/8.4 |
| C2 | 4030006880 | S.CER C1608 JB 1H 472K-T | T | 11.8/2.7 |
| C3 | 4030006880 | S.CER C1608 JB 1H 472K-T | T | 26.5/8.4 |
| C4 | 4030006880 | S.CER C1608 JB 1H 472K-T | T | 27.3/2.7 |
| J1 | 6510019971 | S.CNR 52808-1071 | T | 19.5/5 |

## [VR-C BOARD]

| REF NO. | ORDER NO. | DESCRIPTION | M. | H/V LOCATION |
|---|---|---|---|---|
| R1 | 7210003160 | VAR RV-317 (RK0972210) | | |
| R2 | 7210003160 | VAR RV-317 (RK0972210) | | |
| R3 | 7030003520 | S.RES ERJ3GEYJ 472 V (4.7 k) | T | 28.6/2.7 |
| R4 | 7030003520 | S.RES ERJ3GEYJ 472 V (4.7 k) | T | 27.8/8.4 |
| R5 | 7030003520 | S.RES ERJ3GEYJ 472 V (4.7 k) | T | 10.5/2.7 |
| R6 | 7030003520 | S.RES ERJ3GEYJ 472 V (4.7 k) | T | 11.1/8.4 |
| C1 | 4030006880 | S.CER C1608 JB 1H 472K-T | T | 12.4/8.4 |
| C2 | 4030006880 | S.CER C1608 JB 1H 472K-T | T | 11.8/2.7 |
| C3 | 4030006880 | S.CER C1608 JB 1H 472K-T | T | 26.5/8.4 |
| C4 | 4030006880 | S.CER C1608 JB 1H 472K-T | T | 27.3/2.7 |
| J1 | 6510019971 | S.CNR 52808-1071 | T | 19.5/5 |

## [VR-D BOARD]

| REF NO. | ORDER NO. | DESCRIPTION | M. | H/V LOCATION |
|---|---|---|---|---|
| R1 | 7210001130 | VAR RK097111T005A (10KB) | | |
| R2 | 7210001130 | VAR RK097111T005A (10KB) | | |
| R3 | 7210001130 | VAR RK097111T005A (10KB) | | |
| R4 | 7210001130 | VAR RK097111T005A (10KB) | | |
| R5 | 7210001130 | VAR RK097111T005A (10KB) | | |
| R6 | 7210001130 | VAR RK097111T005A (10KB) | | |
| R7 | 7210001130 | VAR RK097111T005A (10KB) | | |
| R11 | 7030003520 | S.RES ERJ3GEYJ 472 V (4.7 k) | B | 11.3/3.6 |
| R12 | 7030003520 | S.RES ERJ3GEYJ 472 V (4.7 k) | B | 28.4/3.6 |
| R13 | 7030003520 | S.RES ERJ3GEYJ 472 V (4.7 k) | B | 45.2/3.6 |
| R14 | 7030003520 | S.RES ERJ3GEYJ 472 V (4.7 k) | B | 62.3/3.6 |
| R15 | 7030003520 | S.RES ERJ3GEYJ 472 V (4.7 k) | B | 79.2/3.6 |
| R16 | 7030003520 | S.RES ERJ3GEYJ 472 V (4.7 k) | B | 96.3/3.6 |
| R17 | 7030003520 | S.RES ERJ3GEYJ 472 V (4.7 k) | B | 100.5/6.5 |
| C11 | 4030006880 | S.CER C1608 JB 1H 472K-T | B | 11.3/2 |
| C12 | 4030006880 | S.CER C1608 JB 1H 472K-T | B | 28.4/2 |
| C13 | 4030006880 | S.CER C1608 JB 1H 472K-T | B | 45.2/2 |
| C14 | 4030006880 | S.CER C1608 JB 1H 472K-T | B | 62.3/2 |
| C15 | 4030006880 | S.CER C1608 JB 1H 472K-T | B | 79.2/2 |
| C16 | 4030006880 | S.CER C1608 JB 1H 472K-T | B | 96.3/2 |
| C17 | 4030006880 | S.CER C1608 JB 1H 472K-T | B | 100.5/4.9 |
| J1 | 6510019971 | S.CNR 52808-1071 | B | 43/16 |

## [FRONT UNIT]

| REF NO. | ORDER NO. | DESCRIPTION | M. | H/V LOCATION |
|---|---|---|---|---|
| W1 | 8900015930 | CBL OPC-886A (P1,N10,L75) | | |
| W2 | 8900015930 | CBL OPC-886A (P1,N10,L75) | | |
| W3 | 8900012870 | CBL OPC-1331 (N=40,L=70) | | |
| W4 | 8900008670 | CBL OPC-849 (N:30 L:70) | | |
| W5 | 8900015930 | CBL OPC-886A (P1,N10,L75) | | |
| W6 | 8900015930 | CBL OPC-886A (P1,N10,L75) | | |
| W7 | 8900012880 | CBL OPC-1336 (N=18,L=70) | | |
| W8 | 8900015930 | CBL OPC-886A (P1,N10,L75) | | |
| W9 | 8900014871 | CBL OPC-1332A-1 (P0.5,N40,L100) | | |
| W10 | 8900014730 | CBL OPC-683A (P1,N10,L110) | | |
| W11 | 8900008670 | CBL OPC-849 (N:30 L:70) | | |
| W12 | 8900008670 | CBL OPC-849 (N:30 L:70) | | |
| W13 | 8900015930 | CBL OPC-886A (P1,N10,L75) | | |
| W14 | 8900008670 | CBL OPC-849 (N:30 L:70) | | |
| W15 | 8900015930 | CBL OPC-886A (P1,N10,L75) | | |
| W51 | 9025900020 | | | |
| EP1 | 6910015291 | UBD LTA070B790F | | |
| EP11 | 6910011090 | SUT RMS20-250-201-P | | |
| EP12 | 6910011090 | SUT RMS20-250-201-P | | |
| EP13 | 0880001460 | UBD EX-2500 #03 | | |
| EP101 | 6910015650 | E.OTH S-G2218-3#01 (MOUNT PLATE) | | |
| EP102 | 6910015650 | E.OTH S-G2218-3#01 (MOUNT PLATE) | | |

M.=Mounted side (T: Mounted on the Top side, B: Mounted on the Bottom side)
S.=Surface mount

## [SW-A BOARD]

| REF NO. | ORDER NO. | DESCRIPTION | | M. | H/V LOCATION |
|---|---|---|---|---|---|
| R2 | 7030003400 | S.RES | ERJ3GEYJ 471 V (470) | B | 8.3/85.5 |
| R3 | 7030003420 | S.RES | ERJ3GEYJ 681 V (680) | B | 8.3/53.1 |
| R4 | 7030003400 | S.RES | ERJ3GEYJ 471 V (470) | B | 8.3/56.1 |
| R6 | 7030003400 | S.RES | ERJ3GEYJ 471 V (470) | B | 26.8/42.4 |
| R7 | 7030003400 | S.RES | ERJ3GEYJ 471 V (470) | B | 33/41.6 |
| R8 | 7030003400 | S.RES | ERJ3GEYJ 471 V (470) | B | 51.6/40.4 |
| R9 | 7030003400 | S.RES | ERJ3GEYJ 471 V (470) | B | 62.5/36 |
| R10 | 7030003400 | S.RES | ERJ3GEYJ 471 V (470) | B | 75.6/36 |
| R11 | 7030003400 | S.RES | ERJ3GEYJ 471 V (470) | B | 90/37.5 |
| R12 | 7030003400 | S.RES | ERJ3GEYJ 471 V (470) | B | 57.8/82.8 |
| R13 | 7030003480 | S.RES | ERJ3GEYJ 222 V (2.2 k) | B | 3.6/40.8 |
| R14 | 7030003520 | S.RES | ERJ3GEYJ 472 V (4.7 k) | B | 48.4/80.4 |
| R15 | 7030003480 | S.RES | ERJ3GEYJ 222 V (2.2 k) | B | 29.6/39.4 |
| R16 | 7030003520 | S.RES | ERJ3GEYJ 472 V (4.7 k) | B | 41.1/39.4 |
| R17 | 7030003480 | S.RES | ERJ3GEYJ 222 V (2.2 k) | B | 66.3/36 |
| R18 | 7030003520 | S.RES | ERJ3GEYJ 472 V (4.7 k) | B | 79.5/38.1 |
| R19 | 7030003540 | S.RES | ERJ3GEYJ 682 V (6.8 k) | B | 57.3/40.5 |
| R20 | 7030003540 | S.RES | ERJ3GEYJ 682 V (6.8 k) | B | 29.6/40.7 |
| R21 | 7030003540 | S.RES | ERJ3GEYJ 682 V (6.8 k) | B | 2.4/38.1 |
| R22 | 7030003480 | S.RES | ERJ3GEYJ 222 V (2.2 k) | B | 100.2/66.5 |
| R23 | 7030003520 | S.RES | ERJ3GEYJ 472 V (4.7 k) | B | 101.5/63.3 |
| R24 | 7030003580 | S.RES | ERJ3GEYJ 153 V (15 k) | B | 98.6/41.5 |
| R25 | 7030003480 | S.RES | ERJ3GEYJ 222 V (2.2 k) | B | 100.3/19.2 |
| R26 | 7030003520 | S.RES | ERJ3GEYJ 472 V (4.7 k) | B | 100.3/7.2 |
| R27 | 7030003540 | S.RES | ERJ3GEYJ 682 V (6.8 k) | B | 98.6/77.5 |
| R28 | 7030003540 | S.RES | ERJ3GEYJ 682 V (6.8 k) | B | 96.2/35.2 |
| R29 | 7030003580 | S.RES | ERJ3GEYJ 153 V (15 k) | B | 51.2/53.1 |
| R30 | 7030003400 | S.RES | ERJ3GEYJ 471 V (470) | B | 47/58 |
| C1 | 4030011600 | S.CER | C1608 JB 1E 104K-T | B | 99.2/63 |
| C2 | 4030011600 | S.CER | C1608 JB 1E 104K-T | B | 88.8/59.1 |
| C3 | 4030011600 | S.CER | C1608 JB 1E 104K-T | B | 99.4/60.4 |
| C4 | 4030011600 | S.CER | C1608 JB 1E 104K-T | B | 90.1/59.1 |
| C5 | 4030011600 | S.CER | C1608 JB 1E 104K-T | B | 98.9/59 |
| C6 | 4030011600 | S.CER | C1608 JB 1E 104K-T | B | 53.3/77.2 |
| C7 | 4030011600 | S.CER | C1608 JB 1E 104K-T | B | 84.8/80.1 |
| C8 | 4030011600 | S.CER | C1608 JB 1E 104K-T | B | 83.5/65.3 |
| C9 | 4030011600 | S.CER | C1608 JB 1E 104K-T | B | 88/52.2 |
| J1 | 6510019971 | S.CNR | 52808-1071 | B | 46.7/72.7 |
| J2 | 6510019971 | S.CNR | 52808-1071 | B | 83.7/72.7 |
| J3 | 6510022471 | S.CNR | 40FLT-SM2-TB (LF) (SN) | B | 94.3/58.7 |
| DS5 | 5040002980 | S.LED | SML-512DW-T86 | T | 8.5/87.6 |
| DS6 | 5040002930 | S.LED | SML-512MW T86 | T | 8.5/86.3 |
| DS7 | 5040002930 | S.LED | SML-512MW T86 | T | 8.5/41.4 |
| DS8 | 5040002930 | S.LED | SML-512MW T86 | T | 26.2/43 |
| DS9 | 5040002930 | S.LED | SML-512MW T86 | T | 37.7/43 |
| DS10 | 5040002930 | S.LED | SML-512MW T86 | T | 49.2/43 |
| DS11 | 5040002930 | S.LED | SML-512MW T86 | T | 63.2/43 |
| DS12 | 5040002930 | S.LED | SML-512MW T86 | T | 56.2/84.4 |
| DS13 | 5040002930 | S.LED | SML-512MW T86 | T | 74.7/43 |
| DS14 | 5040002930 | S.LED | SML-512MW T86 | T | 86.2/43 |
| DS15 | 5040002990 | S.LED | SML-512UWT86 | T | 8.5/56.4 |
| DS16 | 5040002930 | S.LED | SML-512MW T86 | T | 8.5/55.1 |
| DS17 | 5040002930 | S.LED | SML-512MW T86 | T | 56.2/56.4 |
| S1 | 2260002740 | S.SW | LS8J2M-T | T | 9.7/77.2 |
| S2 | 2260002740 | S.SW | LS8J2M-T | T | 8.2/62.5 |
| S3 | 2260002740 | S.SW | LS8J2M-T | T | 8.2/48.8 |
| S4 | 2260002740 | S.SW | LS8J2M-T | T | 8.2/35.1 |
| S5 | 2260002740 | S.SW | LS8J2M-T | T | 37.5/38.9 |
| S6 | 2260002740 | S.SW | LS8J2M-T | T | 26/38.9 |
| S7 | 2260002740 | S.SW | LS8J2M-T | T | 49/38.9 |
| S8 | 2260002740 | S.SW | LS8J2M-T | T | 63/38.9 |
| S11 | 2260002740 | S.SW | LS8J2M-T | T | 56/79 |
| S12 | 2260002740 | S.SW | LS8J2M-T | T | 74.5/38.9 |
| S13 | 2260002740 | S.SW | LS8J2M-T | T | 86/38.9 |
| S14 | 2260002740 | S.SW | LS8J2M-T | T | 100.3/82.7 |
| S15 | 2260002740 | S.SW | LS8J2M-T | T | 100.3/70.7 |
| S16 | 2260002740 | S.SW | LS8J2M-T | T | 100.3/58.7 |
| S17 | 2260002740 | S.SW | LS8J2M-T | T | 100.3/46.7 |
| S18 | 2260002740 | S.SW | LS8J2M-T | T | 100.3/34.7 |
| S19 | 2260002740 | S.SW | LS8J2M-T | T | 100.3/22.7 |
| S20 | 2260002740 | S.SW | LS8J2M-T | T | 100.3/10.7 |
| S21 | 2260002740 | S.SW | LS8J2M-T | T | 56/51 |

## [SW-B BOARD]

| REF NO. | ORDER NO. | DESCRIPTION | | M. | H/V LOCATION |
|---|---|---|---|---|---|
| J1 | 6510020531 | S.CNR | 52808-1871 | B | 112/20.3 |
| S1 | 2260002740 | S.SW | LS8J2M-T | T | 16.8/24.6 |
| S2 | 2260002740 | S.SW | LS8J2M-T | T | 38.8/24.6 |
| S3 | 2260002740 | S.SW | LS8J2M-T | T | 60.8/24.6 |
| S4 | 2260002740 | S.SW | LS8J2M-T | T | 82.8/24.6 |
| S5 | 2260002740 | S.SW | LS8J2M-T | T | 104.8/24.6 |
| S6 | 2260002740 | S.SW | LS8J2M-T | T | 126.8/24.6 |
| S7 | 2260002740 | S.SW | LS8J2M-T | T | 148.8/24.6 |
| S8 | 2260002740 | S.SW | LS8J2M-T | T | 16.8/15.2 |
| S9 | 2260002740 | S.SW | LS8J2M-T | T | 38.8/15.2 |
| S10 | 2260002740 | S.SW | LS8J2M-T | T | 60.8/15.2 |
| S11 | 2260002740 | S.SW | LS8J2M-T | T | 82.8/15.2 |
| S12 | 2260002740 | S.SW | LS8J2M-T | T | 104.8/15.2 |
| S13 | 2260002740 | S.SW | LS8J2M-T | T | 126.8/15.2 |
| S14 | 2260002740 | S.SW | LS8J2M-T | T | 148.8/15.2 |
| S15 | 2260002740 | S.SW | LS8J2M-T | T | 125.5/3.1 |
| S16 | 2260002740 | S.SW | LS8J2M-T | T | 145.2/3.1 |
| S17 | 2260002740 | S.SW | LS8J2M-T | T | 167.3/3.1 |

## [SW-C BOARD]

| REF NO. | ORDER NO. | DESCRIPTION | | M. | H/V LOCATION |
|---|---|---|---|---|---|
| R1 | 7030003480 | S.RES | ERJ3GEYJ 222 V (2.2 k) | B | 32.7/126.7 |
| R2 | 7030003520 | S.RES | ERJ3GEYJ 472 V (4.7 k) | B | 30.7/122.6 |
| R3 | 7030003580 | S.RES | ERJ3GEYJ 153 V (15 k) | B | 30.7/118.1 |
| R4 | 7030003540 | S.RES | ERJ3GEYJ 682 V (6.8 k) | B | 30.6/125.7 |
| R5 | 7030003480 | S.RES | ERJ3GEYJ 222 V (2.2 k) | B | 30.6/100.1 |
| R6 | 7030003520 | S.RES | ERJ3GEYJ 472 V (4.7 k) | B | 30.6/97.4 |
| R7 | 7030003580 | S.RES | ERJ3GEYJ 153 V (15 k) | B | 31.9/94.7 |
| R8 | 7030003540 | S.RES | ERJ3GEYJ 682 V (6.8 k) | B | 31.9/101.7 |
| R9 | 7030003480 | S.RES | ERJ3GEYJ 222 V (2.2 k) | B | 34.8/71.3 |
| R10 | 7030003520 | S.RES | ERJ3GEYJ 472 V (4.7 k) | B | 35.5/69.3 |
| R11 | 7030003580 | S.RES | ERJ3GEYJ 153 V (15 k) | B | 35.5/66.6 |
| R12 | 7030003540 | S.RES | ERJ3GEYJ 682 V (6.8 k) | B | 32.7/84.5 |
| R13 | 7030003480 | S.RES | ERJ3GEYJ 222 V (2.2 k) | B | 43.1/46.9 |
| R14 | 7030003520 | S.RES | ERJ3GEYJ 472 V (4.7 k) | B | 49.2/44.4 |
| R15 | 7030003540 | S.RES | ERJ3GEYJ 682 V (6.8 k) | B | 43.1/50.6 |
| R51 | 7030003400 | S.RES | ERJ3GEYJ 471 V (470) | B | 38.3/124.2 |
| R52 | 7030003400 | S.RES | ERJ3GEYJ 471 V (470) | B | 41.2/124.2 |
| R53 | 7030003400 | S.RES | ERJ3GEYJ 471 V (470) | B | 37.9/107.7 |
| R54 | 7030003400 | S.RES | ERJ3GEYJ 471 V (470) | B | 46.6/102.1 |
| R55 | 7030003400 | S.RES | ERJ3GEYJ 471 V (470) | B | 43.2/98.8 |
| R56 | 7030003400 | S.RES | ERJ3GEYJ 471 V (470) | B | 46.6/99.4 |
| R57 | 7030003400 | S.RES | ERJ3GEYJ 471 V (470) | B | 48.7/89.9 |
| R58 | 7030003400 | S.RES | ERJ3GEYJ 471 V (470) | B | 48.7/93.3 |
| C1 | 4030011600 | S.CER | C1608 JB 1E 104K-T | B | 28.9/94.5 |
| C2 | 4030011600 | S.CER | C1608 JB 1E 104K-T | B | 41.2/82 |
| C3 | 4030011600 | S.CER | C1608 JB 1E 104K-T | B | 32.1/71.3 |
| C4 | 4030011600 | S.CER | C1608 JB 1E 104K-T | B | 43.5/82.4 |
| J1 | 6510021721 | S.CNR | 30FLT-SM2-TB (LF) (SN) | B | 37.9/89 |
| J2 | 6510019971 | S.CNR | 52808-1071 | B | 44.2/113.1 |
| DS51 | 5040002930 | S.LED | SML-512MW T86 | T | 36.5/123.3 |
| DS52 | 5040002930 | S.LED | SML-512MW T86 | T | 48/123.3 |
| DS53 | 5040002930 | S.LED | SML-512MW T86 | T | 36.5/104.8 |
| DS54 | 5040002930 | S.LED | SML-512MW T86 | T | 48/104.8 |
| DS55 | 5040002930 | S.LED | SML-512MW T86 | T | 36.5/94.8 |
| DS56 | 5040002930 | S.LED | SML-512MW T86 | T | 48/94.8 |
| DS57 | 5040002930 | S.LED | SML-512MW T86 | T | 36.5/84.8 |
| DS58 | 5040002930 | S.LED | SML-512MW T86 | T | 48/84.8 |
| S1 | 2260002740 | S.SW | LS8J2M-T | T | 36.7/129.1 |
| S2 | 2260002740 | S.SW | LS8J2M-T | T | 48.2/129.1 |
| S3 | 2260002740 | S.SW | LS8J2M-T | T | 36.7/118.9 |
| S4 | 2260002740 | S.SW | LS8J2M-T | T | 48.2/118.9 |
| S5 | 2260002740 | S.SW | LS8J2M-T | T | 36.7/100.4 |
| S6 | 2260002740 | S.SW | LS8J2M-T | T | 48.2/100.4 |
| S7 | 2260002740 | S.SW | LS8J2M-T | T | 36.7/90.4 |
| S8 | 2260002740 | S.SW | LS8J2M-T | T | 48.2/90.4 |
| S9 | 2260002740 | S.SW | LS8J2M-T | T | 36.7/80.4 |
| S10 | 2260002740 | S.SW | LS8J2M-T | T | 48.2/80.4 |
| S11 | 2260002740 | S.SW | LS8J2M-T | T | 36.7/70 |
| S12 | 2260002740 | S.SW | LS8J2M-T | T | 36.7/61.2 |
| S13 | 2260002740 | S.SW | LS8J2M-T | T | 36.7/52.4 |
| S14 | 2260002740 | S.SW | LS8J2M-T | T | 36.5/42.7 |
| S15 | 2260002740 | S.SW | LS8J2M-T | T | 61.5/42.7 |
| S16 | 2260002740 | S.SW | LS8J2M-T | T | 12.2/32.4 |
| S17 | 2260002740 | S.SW | LS8J2M-T | T | 74.3/27.4 |
| S18 | 2260002740 | S.SW | LS8J2M-T | T | 12.2/14.7 |
| S19 | 2260002740 | S.SW | LS8J2M-T | T | 75.2/14.2 |
| S20 | 2260002740 | S.SW | LS8J2M-T | T | 12.2/2.3 |
| S21 | 2260002740 | S.SW | LS8J2M-T | T | 75.2/2.3 |
| S22 | 2260002740 | S.SW | LS8J2M-T | T | 25.7/2.3 |

M.=Mounted side (T: Mounted on the Top side, B: Mounted on the Bottom side)
S.=Surface mount

## [JACK BOARD]

| REF NO. | ORDER NO. | DESCRIPTION | | M. | H/V LOCATION |
|---|---|---|---|---|---|
| L1 | 6200003950 | S.COL | HF50ACC 322513-T | T | 33/7.8 |
| L2 | 6200003950 | S.COL | HF50ACC 322513-T | T | 23.5/2.7 |
| L3 | 6200003950 | S.COL | HF50ACC 322513-T | T | 16.2/2 |
| L4 | 6180000900 | COL | LAL 03NA 101K | | |
| L5 | 6180000900 | COL | LAL 03NA 101K | | |
| L6 | 6180000900 | COL | LAL 03NA 101K | | |
| L101 | 6180000900 | COL | LAL 03NA 101K | | |
| L102 | 6180000900 | COL | LAL 03NA 101K | | |
| L103 | 6180000900 | COL | LAL 03NA 101K | | |
| R1 | 7030006060 | S.RES | ERJ12YJ100U (10) | T | 24.1/6.1 |
| R2 | 7030006060 | S.RES | ERJ12YJ100U (10) | T | 16.8/5.4 |
| C1 | 4030006880 | S.CER | C1608 JB 1H 472K-T | B | 26.4/2.1 |
| C2 | 4030006880 | S.CER | C1608 JB 1H 472K-T | B | 26.4/4.8 |
| C3 | 4030006880 | S.CER | C1608 JB 1H 472K-T | B | 20.7/6.9 |
| C101 | 4030006880 | S.CER | C1608 JB 1H 472K-T | B | 15.3/6.9 |
| C102 | 4030006880 | S.CER | C1608 JB 1H 472K-T | B | 11.6/2.1 |
| J1 | 6510019971 | S.CNR | 52808-1071 | B | 19/3.2 |
| J2 | 6510023891 | CNR | S-G4617#01F | | |
| J102 | 6510023900 | CNR | LGR4619-7000 | | |
| EP101 | 6910012350 | S.BEA | MMZ1608Y 102BT | B | 15.3/8.2 |
| EP102 | 6910012350 | S.BEA | MMZ1608Y 102BT | B | 10.3/2.1 |

## [MIC BOARD]

| REF NO. | ORDER NO. | DESCRIPTION | | M. | H/V LOCATION |
|---|---|---|---|---|---|
| L1 | 6200003261 | S.COL | NLV32T-101J | B | 4.5/17.8 |
| L2 | 6200003261 | S.COL | NLV32T-101J | B | 2.4/12.5 |
| L3 | 6200003261 | S.COL | NLV32T-101J | B | 4.5/2 |
| L4 | 6200003950 | S.COL | HF50ACC 322513-T | B | 15.2/15.1 |
| C1 | 4030006880 | S.CER | C1608 JB 1H 472K-T | B | 8.6/16.1 |
| C2 | 4030006880 | S.CER | C1608 JB 1H 472K-T | B | 2.8/5.5 |
| C3 | 4030006880 | S.CER | C1608 JB 1H 472K-T | B | 14.2/12.3 |
| C4 | 4030007130 | S.CER | C1608 CH 1H 101J-T | B | 10.1/11.2 |
| C5 | 4030006880 | S.CER | C1608 JB 1H 472K-T | B | 1.5/5.5 |
| C6 | 4030006880 | S.CER | C1608 JB 1H 472K-T | B | 9.6/.9 |
| C7 | 4030006880 | S.CER | C1608 JB 1H 472K-T | B | 7.7/10.1 |
| C8 | 4030007090 | S.CER | C1608 CH 1H 470J-T | B | 9.4/13.9 |
| J1 | 6510000191 | CNR | FM214-8SS (P) -1 | | |
| J2 | 6510019971 | S.CNR | 52808-1071 | B | 12.7/20.2 |
| EP2 | 6910012350 | S.BEA | MMZ1608Y 102BT | B | 4.1/6.3 |
| EP3 | 6910012350 | S.BEA | MMZ1608Y 102BT | B | 7.6/2 |
| EP4 | 6910012350 | S.BEA | MMZ1608Y 102BT | B | 10.4/16 |
| EP5 | 6910012350 | S.BEA | MMZ1608Y 102BT | B | 2.7/8.1 |
| EP6 | 6910012350 | S.BEA | MMZ1608Y 102BT | B | 7.7/7.7 |
| EP7 | 6910015130 | S.BEA | MMZ1608D 301BT | B | 17.2/10.8 |
| EP8 | 6910015130 | S.BEA | MMZ1608D 301BT | B | 15.9/10.8 |
| EP9 | 6910015130 | S.BEA | MMZ1608D 301BT | B | 10.2/6.9 |
| EP10 | 6910015130 | S.BEA | MMZ1608D 301BT | B | 11.5/9.1 |
| EP11 | 6910012350 | S.BEA | MMZ1608Y 102BT | B | 5.4/14.1 |

## [TENKEY BOARD]

| REF NO. | ORDER NO. | DESCRIPTION | | M. | H/V LOCATION |
|---|---|---|---|---|---|
| IC1 | 1130011510 | S.IC | BU2099FV-E2 | B | 37.5/67.3 |
| IC2 | 1130011510 | S.IC | BU2099FV-E2 | B | 33.5/31.8 |
| R1 | 7030003480 | S.RES | ERJ3GEYJ 222 V (2.2 k) | B | 16.3/75.9 |
| R2 | 7030003520 | S.RES | ERJ3GEYJ 472 V (4.7 k) | B | 16.6/67.7 |
| R3 | 7030003580 | S.RES | ERJ3GEYJ 153 V (15 k) | B | 13.8/47.4 |
| R4 | 7030003540 | S.RES | ERJ3GEYJ 682 V (6.8 k) | B | 16.3/79.3 |
| R5 | 7030003480 | S.RES | ERJ3GEYJ 222 V (2.2 k) | B | 31.5/67.4 |
| R6 | 7030003520 | S.RES | ERJ3GEYJ 472 V (4.7 k) | B | 30.7/65.6 |
| R7 | 7030003580 | S.RES | ERJ3GEYJ 153 V (15 k) | B | 32.3/49.9 |
| R8 | 7030003540 | S.RES | ERJ3GEYJ 682 V (6.8 k) | B | 30.3/78.3 |
| R9 | 7030003480 | S.RES | ERJ3GEYJ 222 V (2.2 k) | B | 49.8/70.1 |
| R10 | 7030003520 | S.RES | ERJ3GEYJ 472 V (4.7 k) | B | 49.8/62.2 |
| R11 | 7030003580 | S.RES | ERJ3GEYJ 153 V (15 k) | B | 47.6/52.6 |
| R12 | 7030003540 | S.RES | ERJ3GEYJ 682 V (6.8 k) | B | 49.8/78.4 |
| R51 | 7030003390 | S.RES | ERJ3GEYJ 391 V (390) | B | 8/78 |
| R52 | 7030003390 | S.RES | ERJ3GEYJ 391 V (390) | B | 8/75.3 |
| R53 | 7030003390 | S.RES | ERJ3GEYJ 391 V (390) | B | 8/70.9 |
| R54 | 7030003390 | S.RES | ERJ3GEYJ 391 V (390) | B | 8/72.9 |
| R55 | 7030003390 | S.RES | ERJ3GEYJ 391 V (390) | B | 10.7/58.2 |
| R56 | 7030003390 | S.RES | ERJ3GEYJ 391 V (390) | B | 12/58.2 |
| R57 | 7030003390 | S.RES | ERJ3GEYJ 391 V (390) | B | 8/49.5 |
| R58 | 7030003390 | S.RES | ERJ3GEYJ 391 V (390) | B | 8/46.8 |
| R59 | 7030003390 | S.RES | ERJ3GEYJ 391 V (390) | B | 19.1/78 |
| R60 | 7030003390 | S.RES | ERJ3GEYJ 391 V (390) | B | 19.1/75.3 |
| R61 | 7030003390 | S.RES | ERJ3GEYJ 391 V (390) | B | 25.5/64.5 |
| R62 | 7030003390 | S.RES | ERJ3GEYJ 391 V (390) | B | 25.5/65.8 |
| R63 | 7030003390 | S.RES | ERJ3GEYJ 391 V (390) | B | 25.5/51.7 |
| R64 | 7030003390 | S.RES | ERJ3GEYJ 391 V (390) | B | 25.5/53 |
| R65 | 7030003390 | S.RES | ERJ3GEYJ 391 V (390) | B | 25.5/49.5 |
| R66 | 7030003390 | S.RES | ERJ3GEYJ 391 V (390) | B | 25.5/47 |
| R67 | 7030003390 | S.RES | ERJ3GEYJ 391 V (390) | B | 43/78 |
| R68 | 7030003390 | S.RES | ERJ3GEYJ 391 V (390) | B | 43/75.3 |
| R69 | 7030003390 | S.RES | ERJ3GEYJ 391 V (390) | B | 43.8/68.5 |
| R70 | 7030003390 | S.RES | ERJ3GEYJ 391 V (390) | B | 43.8/67.2 |
| R71 | 7030003390 | S.RES | ERJ3GEYJ 391 V (390) | B | 43/59 |
| R72 | 7030003390 | S.RES | ERJ3GEYJ 391 V (390) | B | 43/56.3 |
| R73 | 7030003390 | S.RES | ERJ3GEYJ 391 V (390) | B | 44.4/51.3 |
| R74 | 7030003390 | S.RES | ERJ3GEYJ 391 V (390) | B | 44.4/52.6 |
| R75 | 7030003460 | S.RES | ERJ3GEYJ 152 V (1.5 k) | B | 29.7/21 |
| R76 | 7030003460 | S.RES | ERJ3GEYJ 152 V (1.5 k) | B | 44.3/18.1 |
| C1 | 4030011600 | S.CER | C1608 JB 1E 104K-T | B | 8.5/66.9 |
| C2 | 4030011600 | S.CER | C1608 JB 1E 104K-T | B | 5.4/69.3 |
| C3 | 4030011600 | S.CER | C1608 JB 1E 104K-T | B | 11/67.4 |
| C4 | 4030011600 | S.CER | C1608 JB 1E 104K-T | B | 35.9/71.5 |
| C5 | 4030011600 | S.CER | C1608 JB 1E 104K-T | B | 31.7/35.9 |
| J1 | 6510021721 | S.CNR | 30FLT-SM2-TB (LF) (SN) | B | 5.2/60 |
| J2 | 6510021721 | S.CNR | 30FLT-SM2-TB (LF) (SN) | B | 5.2/31.6 |
| J3 | 6510021721 | S.CNR | 30FLT-SM2-TB (LF) (SN) | B | 49.9/33 |
| J4 | 6510019971 | S.CNR | 52808-1071 | B | 53.9/57 |
| J5 | 6510019971 | S.CNR | 52808-1071 | B | 24.5/74.7 |
| J6 | 6510003401 | CNR | B04B-EH-S (LF) (SN) | | |
| J7 | 6510018971 | S.CNR | B4B-PH-SM4-TB (LF) (SN) | B | 36.5/3 |
| DS1 | 5040002980 | S.LED | SML-512DW-T86 | T | 29.5/19 |
| DS2 | 5040002980 | S.LED | SML-512DW-T86 | T | 45.5/19 |
| S1 | 2260002740 | S.SW | LS8J2M-T | T | 9.5/34 |
| S2 | 2260002740 | S.SW | LS8J2M-T | T | 9.5/26 |
| S3 | 2260002740 | S.SW | LS8J2M-T | T | 29.5/34 |
| S4 | 2260002740 | S.SW | LS8J2M-T | T | 29.5/26 |
| S5 | 2260002740 | S.SW | LS8J2M-T | T | 45.5/34 |
| S6 | 2260002740 | S.SW | LS8J2M-T | T | 45.5/26 |
| S7 | 2260002740 | S.SW | LS8J2M-T | T | 9.5/12.7 |
| S8 | 2260002740 | S.SW | LS8J2M-T | T | 29.5/16 |
| S9 | 2260002740 | S.SW | LS8J2M-T | T | 29.5/7.5 |
| S11 | 2260002820 | S.SW | LS9J2M-2D/D-T | T | 10.5/76.2 |
| S12 | 2260002820 | S.SW | LS9J2M-2D/D-T | T | 10.5/66.7 |
| S13 | 2260002820 | S.SW | LS9J2M-2D/D-T | T | 10.5/57.2 |
| S14 | 2260002820 | S.SW | LS9J2M-2D/D-T | T | 10.5/47.7 |
| S15 | 2260002820 | S.SW | LS9J2M-2D/D-T | T | 28/76.2 |
| S16 | 2260002820 | S.SW | LS9J2M-2D/D-T | T | 28/66.7 |
| S17 | 2260002820 | S.SW | LS9J2M-2D/D-T | T | 28/57.2 |
| S18 | 2260002820 | S.SW | LS9J2M-2D/D-T | T | 28/47.7 |
| S19 | 2260002820 | S.SW | LS9J2M-2D/D-T | T | 45.5/76.2 |
| S20 | 2260002820 | S.SW | LS9J2M-2D/D-T | T | 45.5/66.7 |
| S21 | 2260002820 | S.SW | LS9J2M-2D/D-T | T | 45.5/57.2 |
| S22 | 2260002820 | S.SW | LS9J2M-2D/D-T | T | 45.5/47.7 |
| S23 | 2260002740 | S.SW | LS8J2M-T | T | 45.5/16 |
| S24 | 2260002740 | S.SW | LS8J2M-T | T | 45.5/7.5 |

M.=Mounted side (T: Mounted on the Top side, B: Mounted on the Bottom side)
S.=Surface mount

## [PBT1 BOARD]

| REF NO. | ORDER NO. | DESCRIPTION | | M. | H/V LOCATION |
|---|---|---|---|---|---|
| R1 | 7210003180 | VAR | RV-319 (RK0972210) | | |
| R2 | 7030003520 | S.RES | ERJ3GEYJ 472 V (4.7 k) | T | 13.5/6.5 |
| R3 | 7030003520 | S.RES | ERJ3GEYJ 472 V (4.7 k) | T | 13.5/10 |
| C1 | 4030006880 | S.CER | C1608 JB 1H 472K-T | T | 15.6/10 |
| C2 | 4030006880 | S.CER | C1608 JB 1H 472K-T | T | 15.6/6.5 |
| J1 | 6510019971 | S.CNR | 52808-1071 | T | 24.5/7 |
| S1 | 2250000410 | ECR | TP90D96E20-30F-2178-1 | | |

## [PBT2 BOARD]

| REF NO. | ORDER NO. | DESCRIPTION | | M. | H/V LOCATION |
|---|---|---|---|---|---|
| R1 | 7210003180 | VAR | RV-319 (RK0972210) | | |
| R2 | 7210003170 | VAR | RV-318 (RK09L1120CON) | | |
| R3 | 7030003520 | S.RES | ERJ3GEYJ 472 V (4.7 k) | T | 47.4/8.5 |
| R4 | 7030003520 | S.RES | ERJ3GEYJ 472 V (4.7 k) | T | 47.4/9.8 |
| R5 | 7030003520 | S.RES | ERJ3GEYJ 472 V (4.7 k) | T | 16.2/12.3 |
| C1 | 4030006880 | S.CER | C1608 JB 1H 472K-T | T | 52.5/10.2 |
| C2 | 4030006880 | S.CER | C1608 JB 1H 472K-T | T | 50.6/10.2 |
| C3 | 4030006880 | S.CER | C1608 JB 1H 472K-T | T | 16.2/11 |
| J1 | 6510019971 | S.CNR | 52808-1071 | T | 59.1/5.1 |
| S1 | 2250000410 | ECR | TP90D96E20-30F-2178-1 | | |

## [LED BOARD]

| REF NO. | ORDER NO. | DESCRIPTION | | M. | H/V LOCATION |
|---|---|---|---|---|---|
| R1 | 7030003470 | S.RES | ERJ3GEYJ 182 V (1.8 k) | T | 9.1/14.9 |
| R2 | 7030003420 | S.RES | ERJ3GEYJ 681 V (680) | T | 21/14.9 |
| R3 | 7030003440 | S.RES | ERJ3GEYJ 102 V (1 k) | T | 32.1/14.9 |
| R4 | 7030003400 | S.RES | ERJ3GEYJ 471 V (470) | T | 80.2/14.9 |
| R5 | 7030003470 | S.RES | ERJ3GEYJ 182 V (1.8 k) | T | 126/14.9 |
| R6 | 7030003420 | S.RES | ERJ3GEYJ 681 V (680) | T | 139/14.9 |
| R7 | 7030003440 | S.RES | ERJ3GEYJ 102 V (1 k) | T | 149.8/14.9 |
| J1 | 6510020711 | S.CNR | 52793-1070 (1090) | T | 111.3/2.6 |
| DS1 | 5040003000 | S.LED | SML-A12UT-T86 | T | 5.6/15.9 |
| DS2 | 5040002961 | S.LED | SML-A12MT T86J | T | 17.6/15.9 |
| DS3 | 5040003010 | S.LED | SML-A12WT | T | 29.6/15.9 |
| DS4 | 5040002970 | S.LED | CL-270WB-D-TS | T | 76.6/15.9 |
| DS5 | 5040003000 | S.LED | SML-A12UT-T86 | T | 123.6/15.9 |
| DS6 | 5040002961 | S.LED | SML-A12MT T86J | T | 135.6/15.9 |
| DS7 | 5040003010 | S.LED | SML-A12WT | T | 147.6/15.9 |

## [CF BOARD]

| REF NO. | ORDER NO. | DESCRIPTION | | M. | H/V LOCATION |
|---|---|---|---|---|---|
| R1 | 7030003470 | S.RES | ERJ3GEYJ 182 V (1.8 k) | T | 8.8/8.7 |
| J1 | 6510024151 | S.CNR | 50FY-BMT-TB (LF) (SN) | T | 34.5/4.4 |
| J2 | 6510025670 | S.CNR | 31-5620-050-719-871 | T | 34.5/13.6 |
| J3 | 6510021601 | S.CNR | S2B-PH-SM4-TB (LF) (SN) | T | 13.7/3.7 |
| DS1 | 5040002990 | S.LED | SML-512UWT86 | T | 61.2/40.5 |
| EP2 | 6910015640 | E.OTH | 30-5610-000-002-000 | | |

## [DISPLAY BOARD]

| REF NO. | ORDER NO. | DESCRIPTION | | M. | H/V LOCATION |
|---|---|---|---|---|---|
| IC1 | 1130009640 | S.IC | BU4051BCFV-E2 | T | 121.9/76.4 |
| IC2 | 1130009640 | S.IC | BU4051BCFV-E2 | T | 110.5/10.9 |
| IC3 | 1130009640 | S.IC | BU4051BCFV-E2 | T | 76.7/20 |
| IC4 | 1130009640 | S.IC | BU4051BCFV-E2 | T | 24/61.2 |
| IC5 | 1130009640 | S.IC | BU4051BCFV-E2 | T | 106.8/77.4 |
| IC6 | 1140011820 | S.IC | M30620FCMGP D5 | T | 48.1/27.7 |
| IC7 | 1130011510 | S.IC | BU2099FV-E2 | T | 124/59.8 |
| IC201 | 1130009301 | S.IC | TC7SET08FU (T5L,JF) | T | 71.1/51.8 |
| IC202 | 1130009301 | S.IC | TC7SET08FU (T5L,JF) | T | 107.2/58.5 |
| IC601 | 1130011551 | S.IC | RX-4581NB-F | T | 39/45.9 |
| IC651 | 1110005821 | S.IC | R3112N281A-TR-F | T | 47.9/91.1 |
| Q200 | 1590000430 | S.TR | DTC144EUA T106 | T | 40.8/89.7 |
| Q201 | 1530003301 | S.TR | 2SC3647S-TD-E | T | 91.1/47.1 |
| Q202 | 1530003301 | S.TR | 2SC3647S-TD-E | T | 91.1/26.5 |
| Q203 | 1530002060 | S.TR | 2SC4081 T106 R | T | 73.9/61.5 |
| Q204 | 1520000651 | S.TR | 2SB1201S-TL-E | T | 79.5/65.1 |
| Q205 | 1590000680 | S.TR | DTC114EUA T106 | T | 70.8/57.1 |
| Q206 | 1590000680 | S.TR | DTC114EUA T106 | T | 113/19.4 |
| Q208 | 1590001330 | S.TR | DTA114EUA T106 | T | 120/68.5 |
| Q209 | 1520000651 | S.TR | 2SB1201S-TL-E | T | 113.9/59.9 |
| Q210 | 1530002060 | S.TR | 2SC4081 T106 R | T | 107.3/55.3 |
| Q211 | 1590001330 | S.TR | DTA114EUA T106 | T | 122.5/65.4 |
| Q212 | 1590000680 | S.TR | DTC114EUA T106 | T | 72.5/54.3 |
| Q501 | 1590000680 | S.TR | DTC114EUA T106 | T | 86/88.8 |
| Q502 | 1590000680 | S.TR | DTC114EUA T106 | T | 86/92.5 |
| Q503 | 1590000680 | S.TR | DTC114EUA T106 | T | 82.8/90.8 |
| Q504 | 1590001330 | S.TR | DTA114EUA T106 | T | 89.2/88.8 |
| Q505 | 1590000680 | S.TR | DTC114EUA T106 | T | 125/66.6 |
| Q601 | 1510000501 | S.TR | 2SA1162-GR (TE85R,F) | T | 41.4/85.2 |
| D7 | 1750000520 | S.DIO | DAN222TL | T | 122.4/18.7 |
| D8 | 1160000140 | S.DIO | DAP222 TL | T | 122.4/15.3 |
| D9 | 1730002340 | S.ZEN | MA8047-M (TX) | T | 74.3/59.3 |
| D10 | 1730002590 | S.ZEN | MA8033-H (TX) | T | 109.5/56.9 |
| D11 | 1790001670 | S.DIO | RB706F-40T106 | T | 121.3/10.6 |
| D12 | 1790001670 | S.DIO | RB706F-40T106 | T | 60/31 |
| D601 | 1790001250 | S.DIO | MA2S111-(TX) | T | 42.2/82.8 |
| D602 | 1790001250 | S.DIO | MA2S111-(TX) | T | 39/85.9 |
| D603 | 1790001250 | S.DIO | MA2S111-(TX) | T | 39/83.4 |
| X1 | 6050009870 | S.XTL | CR-567 (9.8304 MHz) | T | 49.7/44.5 |
| L201 | 6200001831 | S.COL | NLV32T-100J | T | 112/85.8 |
| L203 | 6200003950 | S.COL | HF50ACC 322513-T | T | 115.2/85.6 |
| L204 | 6200001831 | S.COL | NLV32T-100J | T | 126.9/91.6 |
| L205 | 6200003950 | S.COL | HF50ACC 322513-T | T | 61.2/36.6 |
| L207 | 6200003950 | S.COL | HF50ACC 322513-T | T | 117.4/17.1 |
| L208 | 6200003950 | S.COL | HF50ACC 322513-T | T | 118.4/85.6 |
| L209 | 6200003950 | S.COL | HF50ACC 322513-T | T | 9.9/64 |
| L210 | 6190001191 | S.COL | D10F-#A814AY-101K | T | 86.6/79.7 |
| L211 | 6190001191 | S.COL | D10F-#A814AY-101K | T | 81.2/38.2 |
| L601 | 6200001831 | S.COL | NLV32T-100J | T | 34.7/83.8 |
| R200 | 7030003440 | S.RES | ERJ3GEYJ 102 V (1 k) | T | 73.1/51.7 |
| R201 | 7030003470 | S.RES | ERJ3GEYJ 182 V (1.8 k) | T | 96.6/43.6 |
| R202 | 7030003470 | S.RES | ERJ3GEYJ 182 V (1.8 k) | T | 96.6/32.9 |
| R203 | 7030003800 | S.RES | ERJ3GEYJ 105 V (1 M) | T | 49.7/41.2 |
| R208 | 7030003360 | S.RES | ERJ3GEYJ 221 V (220) | T | 75/57 |
| R209 | 7030003860 | S.RES | ERJ3GE JPW V | T | 14.6/25 |
| R210 | 7030003860 | S.RES | ERJ3GE JPW V | T | 22/24.4 |
| R212 | 7030003660 | S.RES | ERJ3GEYJ 683 V (68 k) | T | 67.8/57.6 |
| R213 | 7030003580 | S.RES | ERJ3GEYJ 153 V (15 k) | T | 70.3/54.7 |
| R214 | 7030003440 | S.RES | ERJ3GEYJ 102 V (1 k) | T | 40.7/13.4 |
| R215 | 7030003440 | S.RES | ERJ3GEYJ 102 V (1 k) | T | 39.4/13.4 |
| R216 | 7030003440 | S.RES | ERJ3GEYJ 102 V (1 k) | T | 38.1/13.4 |
| R217 | 7030003440 | S.RES | ERJ3GEYJ 102 V (1 k) | T | 36.8/13.4 |
| R218 | 7030003440 | S.RES | ERJ3GEYJ 102 V (1 k) | T | 35.5/13.4 |
| R219 | 7030003440 | S.RES | ERJ3GEYJ 102 V (1 k) | T | 34.2/13.4 |
| R220 | 7030003440 | S.RES | ERJ3GEYJ 102 V (1 k) | T | 31.6/13.6 |
| R221 | 7030003440 | S.RES | ERJ3GEYJ 102 V (1 k) | T | 32.9/13.4 |
| R222 | 7030003440 | S.RES | ERJ3GEYJ 102 V (1 k) | T | 30.6/16.1 |
| R223 | 7030003440 | S.RES | ERJ3GEYJ 102 V (1 k) | T | 29.8/13.5 |
| R224 | 7030003440 | S.RES | ERJ3GEYJ 102 V (1 k) | T | 29.1/16.1 |
| R225 | 7030003440 | S.RES | ERJ3GEYJ 102 V (1 k) | T | 28.3/13.4 |
| R226 | 7030003440 | S.RES | ERJ3GEYJ 102 V (1 k) | T | 27.6/16.1 |
| R227 | 7030003440 | S.RES | ERJ3GEYJ 102 V (1 k) | T | 26.8/13.4 |
| R228 | 7030003440 | S.RES | ERJ3GEYJ 102 V (1 k) | T | 25.5/13.4 |
| R229 | 7030003440 | S.RES | ERJ3GEYJ 102 V (1 k) | T | 22.9/13.4 |
| R230 | 7030003440 | S.RES | ERJ3GEYJ 102 V (1 k) | T | 24.2/13.4 |
| R232 | 7030003440 | S.RES | ERJ3GEYJ 102 V (1 k) | T | 74.1/13.4 |
| R233 | 7030003440 | S.RES | ERJ3GEYJ 102 V (1 k) | T | 76.9/13.4 |
| R234 | 7030003440 | S.RES | ERJ3GEYJ 102 V (1 k) | T | 75.4/13.4 |
| R235 | 7030003440 | S.RES | ERJ3GEYJ 102 V (1 k) | T | 78.2/13.4 |
| R236 | 7030003440 | S.RES | ERJ3GEYJ 102 V (1 k) | T | 79.5/13.4 |
| R237 | 7030003440 | S.RES | ERJ3GEYJ 102 V (1 k) | T | 80.8/13.4 |
| R238 | 7030003440 | S.RES | ERJ3GEYJ 102 V (1 k) | T | 82.1/13.4 |
| R239 | 7030003440 | S.RES | ERJ3GEYJ 102 V (1 k) | T | 107.3/86.7 |
| R240 | 7030003440 | S.RES | ERJ3GEYJ 102 V (1 k) | T | 105.9/86.7 |
| R241 | 7030003680 | S.RES | ERJ3GEYJ 104 V (100 k) | T | 108.6/86.6 |
| R242 | 7030003680 | S.RES | ERJ3GEYJ 104 V (100 k) | T | 104.5/86.7 |
| R246 | 7030003440 | S.RES | ERJ3GEYJ 102 V (1 k) | T | 59.5/13.3 |
| R247 | 7030003440 | S.RES | ERJ3GEYJ 102 V (1 k) | T | 58.2/13.3 |
| R248 | 7030003440 | S.RES | ERJ3GEYJ 102 V (1 k) | T | 56.9/13.3 |
| R249 | 7030003440 | S.RES | ERJ3GEYJ 102 V (1 k) | T | 55.6/13.3 |
| R250 | 7030003440 | S.RES | ERJ3GEYJ 102 V (1 k) | T | 54.3/13.3 |
| R251 | 7030003320 | S.RES | ERJ3GEYJ 101 V (100) | T | 52.8/13.3 |
| R252 | 7030003440 | S.RES | ERJ3GEYJ 102 V (1 k) | T | 51.5/13.3 |
| R253 | 7030003440 | S.RES | ERJ3GEYJ 102 V (1 k) | T | 50.2/13.3 |

M.=Mounted side (T: Mounted on the Top side, B: Mounted on the Bottom side)
S.=Surface mount

## [DISPLAY BOARD]

| REF NO. | ORDER NO. | DESCRIPTION | | M. | H/V LOCATION |
|---|---|---|---|---|---|
| R254 | 7030003680 | S.RES | ERJ3GEYJ 104 V (100 k) | T | 48.4/13.3 |
| R255 | 7030003640 | S.RES | ERJ3GEYJ 473 V (47 k) | T | 12.6/14.1 |
| R256 | 7030003640 | S.RES | ERJ3GEYJ 473 V (47 k) | T | 16.5/14.1 |
| R257 | 7030003670 | S.RES | ERJ3GEYJ 823 V (82 k) | T | 13.9/14.1 |
| R258 | 7030003670 | S.RES | ERJ3GEYJ 823 V (82 k) | T | 15.2/14.1 |
| R259 | 7030003440 | S.RES | ERJ3GEYJ 102 V (1 k) | T | 12.8/90.1 |
| R260 | 7030003440 | S.RES | ERJ3GEYJ 102 V (1 k) | T | 19.4/87.2 |
| R261 | 7030003440 | S.RES | ERJ3GEYJ 102 V (1 k) | T | 10.1/88.5 |
| R262 | 7030003440 | S.RES | ERJ3GEYJ 102 V (1 k) | T | 7.1/79.8 |
| R263 | 7030003440 | S.RES | ERJ3GEYJ 102 V (1 k) | T | 18/81.9 |
| R264 | 7030003440 | S.RES | ERJ3GEYJ 102 V (1 k) | T | 7.1/78.5 |
| R265 | 7030003440 | S.RES | ERJ3GEYJ 102 V (1 k) | T | 18/80.6 |
| R266 | 7030003440 | S.RES | ERJ3GEYJ 102 V (1 k) | T | 7.1/77.2 |
| R267 | 7030003440 | S.RES | ERJ3GEYJ 102 V (1 k) | T | 18/79.3 |
| R268 | 7030003440 | S.RES | ERJ3GEYJ 102 V (1 k) | T | 7.1/75.9 |
| R269 | 7030003440 | S.RES | ERJ3GEYJ 102 V (1 k) | T | 18/78 |
| R270 | 7030003440 | S.RES | ERJ3GEYJ 102 V (1 k) | T | 7.1/74.6 |
| R271 | 7030003440 | S.RES | ERJ3GEYJ 102 V (1 k) | T | 18/76.7 |
| R272 | 7030003440 | S.RES | ERJ3GEYJ 102 V (1 k) | T | 7.1/73.3 |
| R273 | 7030003440 | S.RES | ERJ3GEYJ 102 V (1 k) | T | 7.1/72 |
| R274 | 7030003440 | S.RES | ERJ3GEYJ 102 V (1 k) | T | 18/75.4 |
| R275 | 7030003440 | S.RES | ERJ3GEYJ 102 V (1 k) | T | 7.1/70.7 |
| R276 | 7030003440 | S.RES | ERJ3GEYJ 102 V (1 k) | T | 18/74.1 |
| R278 | 7030003440 | S.RES | ERJ3GEYJ 102 V (1 k) | T | 13.4/42.7 |
| R279 | 7030003440 | S.RES | ERJ3GEYJ 102 V (1 k) | T | 4/43.9 |
| R280 | 7030003440 | S.RES | ERJ3GEYJ 102 V (1 k) | T | 13.4/44 |
| R281 | 7030003440 | S.RES | ERJ3GEYJ 102 V (1 k) | T | 4/45.2 |
| R282 | 7030003440 | S.RES | ERJ3GEYJ 102 V (1 k) | T | 13.4/45.3 |
| R283 | 7030003440 | S.RES | ERJ3GEYJ 102 V (1 k) | T | 4/46.5 |
| R284 | 7030003520 | S.RES | ERJ3GEYJ 472 V (4.7 k) | T | 13.4/46.6 |
| R285 | 7030003440 | S.RES | ERJ3GEYJ 102 V (1 k) | T | 4/47.8 |
| R286 | 7030003440 | S.RES | ERJ3GEYJ 102 V (1 k) | T | 13.4/47.9 |
| R287 | 7030003440 | S.RES | ERJ3GEYJ 102 V (1 k) | T | 4/49.1 |
| R288 | 7030003440 | S.RES | ERJ3GEYJ 102 V (1 k) | T | 13.4/49.2 |
| R289 | 7030003440 | S.RES | ERJ3GEYJ 102 V (1 k) | T | 13.4/50.5 |
| R290 | 7030003440 | S.RES | ERJ3GEYJ 102 V (1 k) | T | 4/51.7 |
| R291 | 7030003440 | S.RES | ERJ3GEYJ 102 V (1 k) | T | 13.4/51.8 |
| R292 | 7030003440 | S.RES | ERJ3GEYJ 102 V (1 k) | T | 4/53 |
| R293 | 7030003440 | S.RES | ERJ3GEYJ 102 V (1 k) | T | 13.4/54.4 |
| R294 | 7030003440 | S.RES | ERJ3GEYJ 102 V (1 k) | T | 4/55.6 |
| R295 | 7030003440 | S.RES | ERJ3GEYJ 102 V (1 k) | T | 4/58.2 |
| R296 | 7030003440 | S.RES | ERJ3GEYJ 102 V (1 k) | T | 13.4/58.3 |
| R297 | 7030003440 | S.RES | ERJ3GEYJ 102 V (1 k) | T | 4/60.8 |
| R298 | 7030003440 | S.RES | ERJ3GEYJ 102 V (1 k) | T | 13.4/59.6 |
| R299 | 7030003440 | S.RES | ERJ3GEYJ 102 V (1 k) | T | 4/50.4 |
| R300 | 7030003440 | S.RES | ERJ3GEYJ 102 V (1 k) | T | 4/63.4 |
| R301 | 7030003440 | S.RES | ERJ3GEYJ 102 V (1 k) | T | 13.4/62.2 |
| R302 | 7030003560 | S.RES | ERJ3GEYJ 103 V (10 k) | T | 13.4/60.9 |
| R303 | 7030003560 | S.RES | ERJ3GEYJ 103 V (10 k) | T | 4/62.1 |
| R304 | 7030003560 | S.RES | ERJ3GEYJ 103 V (10 k) | T | 13.4/57 |
| R305 | 7030003560 | S.RES | ERJ3GEYJ 103 V (10 k) | T | 4/59.5 |
| R306 | 7030003560 | S.RES | ERJ3GEYJ 103 V (10 k) | T | 4/56.9 |
| R307 | 7030003560 | S.RES | ERJ3GEYJ 103 V (10 k) | T | 13.4/55.7 |
| R308 | 7030003560 | S.RES | ERJ3GEYJ 103 V (10 k) | T | 4/54.3 |
| R309 | 7030003560 | S.RES | ERJ3GEYJ 103 V (10 k) | T | 13.4/53.1 |
| R310 | 7030003440 | S.RES | ERJ3GEYJ 102 V (1 k) | T | 24.2/32 |
| R311 | 7030003440 | S.RES | ERJ3GEYJ 102 V (1 k) | T | 22.9/32 |
| R312 | 7030003440 | S.RES | ERJ3GEYJ 102 V (1 k) | T | 104.9/9.4 |
| R313 | 7030003440 | S.RES | ERJ3GEYJ 102 V (1 k) | T | 104.9/10.7 |
| R314 | 7030003440 | S.RES | ERJ3GEYJ 102 V (1 k) | T | 104.1/12.2 |
| R315 | 7030003440 | S.RES | ERJ3GEYJ 102 V (1 k) | T | 104.9/6.8 |
| R316 | 7030003440 | S.RES | ERJ3GEYJ 102 V (1 k) | T | 116.1/13.7 |
| R317 | 7030003440 | S.RES | ERJ3GEYJ 102 V (1 k) | T | 116.7/8.3 |
| R318 | 7030003440 | S.RES | ERJ3GEYJ 102 V (1 k) | T | 116.1/11.7 |
| R319 | 7030003440 | S.RES | ERJ3GEYJ 102 V (1 k) | T | 116.6/9.6 |
| R320 | 7030003440 | S.RES | ERJ3GEYJ 102 V (1 k) | T | 135.2/23.4 |
| R321 | 7030003440 | S.RES | ERJ3GEYJ 102 V (1 k) | T | 127.7/20.8 |
| R322 | 7030003440 | S.RES | ERJ3GEYJ 102 V (1 k) | T | 126.4/20.8 |
| R323 | 7030003560 | S.RES | ERJ3GEYJ 103 V (10 k) | T | 114.9/18.7 |
| R325 | 7030003380 | S.RES | ERJ3GEYJ 331 V (330) | T | 106.9/69.6 |
| R326 | 7030003360 | S.RES | ERJ3GEYJ 221 V (220) | T | 109.8/54.4 |
| R327 | 7030003580 | S.RES | ERJ3GEYJ 153 V (15 k) | T | 105.4/55.1 |
| R328 | 7030003660 | S.RES | ERJ3GEYJ 683 V (68 k) | T | 105.1/61.2 |
| R329 | 7030003560 | S.RES | ERJ3GEYJ 103 V (10 k) | T | 38/33.3 |
| R330 | 7030003480 | S.RES | ERJ3GEYJ 222 V (2.2 k) | T | 128.8/54.1 |
| R331 | 7030003640 | S.RES | ERJ3GEYJ 473 V (47 k) | T | 18/84.5 |
| R332 | 7030003640 | S.RES | ERJ3GEYJ 473 V (47 k) | T | 9.1/84.8 |
| R333 | 7030003640 | S.RES | ERJ3GEYJ 473 V (47 k) | T | 18/83.2 |
| R334 | 7030003640 | S.RES | ERJ3GEYJ 473 V (47 k) | T | 9.1/83.5 |
| R335 | 7030003670 | S.RES | ERJ3GEYJ 823 V (82 k) | T | 21.4/84.5 |
| R336 | 7030003670 | S.RES | ERJ3GEYJ 823 V (82 k) | T | 8.4/86.9 |
| R337 | 7030003670 | S.RES | ERJ3GEYJ 823 V (82 k) | T | 20.7/83.2 |
| R338 | 7030003670 | S.RES | ERJ3GEYJ 823 V (82 k) | T | 8.1/81.1 |
| R339 | 7070000261 | RES | ERG2SJ 220 (22) | | |
| R340 | 7070000261 | RES | ERG2SJ 220 (22) | | |
| R342 | 7030003640 | S.RES | ERJ3GEYJ 473 V (47 k) | T | 35.4/38.4 |
| R343 | 7030003640 | S.RES | ERJ3GEYJ 473 V (47 k) | T | 105.1/57.7 |
| R351 | 7030003440 | S.RES | ERJ3GEYJ 102 V (1 k) | T | 123.2/70.3 |
| R352 | 7030003440 | S.RES | ERJ3GEYJ 102 V (1 k) | T | 101.2/80.6 |
| R353 | 7030003440 | S.RES | ERJ3GEYJ 102 V (1 k) | T | 102.3/75 |
| R354 | 7030003440 | S.RES | ERJ3GEYJ 102 V (1 k) | T | 100.2/78 |
| R355 | 7030003440 | S.RES | ERJ3GEYJ 102 V (1 k) | T | 101/75.2 |
| R356 | 7030003440 | S.RES | ERJ3GEYJ 102 V (1 k) | T | 128.4/78.7 |
| R357 | 7030003440 | S.RES | ERJ3GEYJ 102 V (1 k) | T | 126.7/72.1 |
| R358 | 7030003440 | S.RES | ERJ3GEYJ 102 V (1 k) | T | 114.8/75.7 |
| R359 | 7030003440 | S.RES | ERJ3GEYJ 102 V (1 k) | T | 116.1/75.4 |
| R360 | 7030003440 | S.RES | ERJ3GEYJ 102 V (1 k) | T | 130.1/77.2 |
| R361 | 7030003440 | S.RES | ERJ3GEYJ 102 V (1 k) | T | 129.4/74 |
| R362 | 7030003440 | S.RES | ERJ3GEYJ 102 V (1 k) | T | 116.4/79.3 |
| R363 | 7030003440 | S.RES | ERJ3GEYJ 102 V (1 k) | T | 117.4/75.5 |
| R364 | 7030003640 | S.RES | ERJ3GEYJ 473 V (47 k) | T | 61.2/29 |
| R365 | 7030004730 | S.RES | ERJ3GEYF 222 V (2.2 k) | T | 61.9/33 |
| R366 | 7030003440 | S.RES | ERJ3GEYJ 102 V (1 k) | T | 128.4/64.2 |
| R369 | 7030003860 | S.RES | ERJ3GE JPW V | T | 55.7/37.4 |

## [DISPLAY BOARD]

| REF NO. | ORDER NO. | DESCRIPTION | | M. | H/V LOCATION |
|---|---|---|---|---|---|
| R501 | 7030003640 | S.RES | ERJ3GEYJ 473 V (47 k) | T | 68.5/16.9 |
| R502 | 7030003640 | S.RES | ERJ3GEYJ 473 V (47 k) | T | 67.2/16.9 |
| R503 | 7030003640 | S.RES | ERJ3GEYJ 473 V (47 k) | T | 36.1/32.5 |
| R504 | 7030003440 | S.RES | ERJ3GEYJ 102 V (1 k) | T | 135.3/62.2 |
| R505 | 7030003360 | S.RES | ERJ3GEYJ 221 V (220) | T | 89.2/86.9 |
| R601 | 7030003860 | S.RES | ERJ3GE JPW V | T | 44.1/89.8 |
| R602 | 7030003520 | S.RES | ERJ3GEYJ 472 V (4.7 k) | T | 41.6/87.6 |
| R603 | 7030003640 | S.RES | ERJ3GEYJ 473 V (47 k) | T | 32.4/45.4 |
| R604 | 7030003560 | S.RES | ERJ3GEYJ 103 V (10 k) | T | 32.4/46.9 |
| R651 | 7030003650 | S.RES | ERJ3GEYJ 563 V (56 k) | T | 114.8/95 |
| R652 | 7030003620 | S.RES | ERJ3GEYJ 333 V (33 k) | T | 118.6/95 |
| R653 | 7030003520 | S.RES | ERJ3GEYJ 472 V (4.7 k) | T | 44.1/86.1 |
| | | | | | |
| C8 | 4030011600 | S.CER | C1608 JB 1E 104K-T | T | 134.5/74.9 |
| C201 | 4310001170 | MLR | ECQE1A 124JBB | | |
| C202 | 4030016880 | S.CER | C4520 CH 3F 150KT-A | T | 125.1/37.2 |
| C203 | 4030007020 | S.CER | C1608 CH 1H 120J-T | T | 50.5/39.9 |
| C204 | 4030007020 | S.CER | C1608 CH 1H 120J-T | T | 47.9/40 |
| C205 | 4030011600 | S.CER | C1608 JB 1E 104K-T | T | 27.7/64.4 |
| C206 | 4030011600 | S.CER | C1608 JB 1E 104K-T | T | 109/80.8 |
| C207 | 4030011600 | S.CER | C1608 JB 1E 104K-T | T | 73.2/22.2 |
| C208 | 4030011600 | S.CER | C1608 JB 1E 104K-T | T | 109.5/6.1 |
| C209 | 4030011600 | S.CER | C1608 JB 1E 104K-T | T | 124.1/79.9 |
| C210 | 4030011600 | S.CER | C1608 JB 1E 104K-T | T | 67.8/56.3 |
| C211 | 4030011600 | S.CER | C1608 JB 1E 104K-T | T | 107.7/61.2 |
| C212 | 4510008800 | S.ELE | EEE1EA100SR | T | 68.8/61.3 |
| C213 | 4510009150 | S.ELE | EEE1EA470WP | T | 77.8/52 |
| C214 | 4510008800 | S.ELE | EEE1EA100SR | T | 72.2/67.1 |
| C215 | 4030011600 | S.CER | C1608 JB 1E 104K-T | T | 120.9/85.8 |
| C216 | 4030011600 | S.CER | C1608 JB 1E 104K-T | T | 58.7/5.2 |
| C217 | 4030011600 | S.CER | C1608 JB 1E 104K-T | T | 108.3/83.3 |
| C218 | 4510009150 | S.ELE | EEE1EA470WP | T | 99.6/84.8 |
| C219 | 4030006860 | S.CER | C1608 JB 1H 102K-T | T | 109.8/83.3 |
| C220 | 4030011600 | S.CER | C1608 JB 1E 104K-T | T | 126.2/88.8 |
| C221 | 4030011600 | S.CER | C1608 JB 1E 104K-T | T | 103.2/55.1 |
| C222 | 4030011600 | S.CER | C1608 JB 1E 104K-T | T | 127.7/15.4 |
| C223 | 4030011600 | S.CER | C1608 JB 1E 104K-T | T | 134.7/27.7 |
| C224 | 4030011600 | S.CER | C1608 JB 1E 104K-T | T | 48.1/38.2 |
| C225 | 4030011600 | S.CER | C1608 JB 1E 104K-T | T | 119.8/61.5 |
| C226 | 4030011600 | S.CER | C1608 JB 1E 104K-T | T | 17.2/87.2 |
| C227 | 4030011600 | S.CER | C1608 JB 1E 104K-T | T | 120.9/82.9 |
| C228 | 4510008800 | S.ELE | EEE1EA100SR | T | 125.5/83.6 |
| C229 | 4030011600 | S.CER | C1608 JB 1E 104K-T | T | 7.3/65.1 |
| C230 | 4030006880 | S.CER | C1608 JB 1H 472K-T | T | 58.6/29 |
| C231 | 4030011600 | S.CER | C1608 JB 1E 104K-T | T | 47.6/17.4 |
| C232 | 4030011600 | S.CER | C1608 JB 1E 104K-T | T | 58/31.2 |
| C241 | 4030011600 | S.CER | C1608 JB 1E 104K-T | T | 118.9/80.3 |
| C242 | 4030011600 | S.CER | C1608 JB 1E 104K-T | T | 116.4/81.2 |
| C243 | 4030011600 | S.CER | C1608 JB 1E 104K-T | T | 120.2/80.3 |
| C244 | 4030011600 | S.CER | C1608 JB 1E 104K-T | T | 121.1/73 |
| C245 | 4030011600 | S.CER | C1608 JB 1E 104K-T | T | 128.4/80 |
| C246 | 4030011600 | S.CER | C1608 JB 1E 104K-T | T | 131.3/74.6 |
| C247 | 4030011600 | S.CER | C1608 JB 1E 104K-T | T | 130.1/75.9 |
| C248 | 4030011600 | S.CER | C1608 JB 1E 104K-T | T | 124.8/73 |
| C249 | 4030011600 | S.CER | C1608 JB 1E 104K-T | T | 112.1/6.1 |
| C250 | 4030011600 | S.CER | C1608 JB 1E 104K-T | T | 113.5/14.3 |
| C251 | 4030011600 | S.CER | C1608 JB 1E 104K-T | T | 112.1/7.4 |
| C252 | 4030011600 | S.CER | C1608 JB 1E 104K-T | T | 115.9/6.9 |
| C253 | 4030011600 | S.CER | C1608 JB 1E 104K-T | T | 104.1/13.5 |
| C254 | 4030011600 | S.CER | C1608 JB 1E 104K-T | T | 109.5/7.4 |
| C255 | 4030011600 | S.CER | C1608 JB 1E 104K-T | T | 104.9/8.1 |
| C256 | 4030011600 | S.CER | C1608 JB 1E 104K-T | T | 104.9/5.5 |
| C257 | 4030011600 | S.CER | C1608 JB 1E 104K-T | T | 72.8/13.4 |
| C258 | 4030011600 | S.CER | C1608 JB 1E 104K-T | T | 72.7/16.2 |
| C259 | 4030011600 | S.CER | C1608 JB 1E 104K-T | T | 80.2/19 |
| C260 | 4030011600 | S.CER | C1608 JB 1E 104K-T | T | 72.4/19.4 |
| C261 | 4030011600 | S.CER | C1608 JB 1E 104K-T | T | 76.4/28.1 |
| C262 | 4030011600 | S.CER | C1608 JB 1E 104K-T | T | 75.1/28.1 |
| C263 | 4030011600 | S.CER | C1608 JB 1E 104K-T | T | 73.3/27.3 |
| C264 | 4030011600 | S.CER | C1608 JB 1E 104K-T | T | 72.5/25.5 |
| C265 | 4030011600 | S.CER | C1608 JB 1E 104K-T | T | 20.9/52.3 |
| C266 | 4030011600 | S.CER | C1608 JB 1E 104K-T | T | 28.4/62.5 |
| C267 | 4030011600 | S.CER | C1608 JB 1E 104K-T | T | 21.6/55.8 |
| C268 | 4030011600 | S.CER | C1608 JB 1E 104K-T | T | 21.6/57.1 |
| C601 | 4510008800 | S.ELE | EEE1EA100SR | T | 29.4/86.2 |
| C602 | 4030011600 | S.CER | C1608 JB 1E 104K-T | T | 39.2/41.8 |
| C651 | 4030008890 | S.CER | C1608 JB 1H 273K-T | T | 47.9/93.5 |
| C652 | 4030011600 | S.CER | C1608 JB 1E 104K-T | T | 50.3/91.9 |
| | | | | | |
| J1 | 6510021721 | S.CNR | 30FLT-SM2-TB (LF) (SN) | T | 13.2/80.7 |
| J2 | 6510021721 | S.CNR | 30FLT-SM2-TB (LF) (SN) | T | 8.7/52.4 |
| J3 | 6510022471 | S.CNR | 40FLT-SM2-TB (LF) (SN) | T | 131.5/62.7 |
| J4 | 6510020531 | S.CNR | 52808-1871 | T | 30.8/8.8 |
| J5 | 6510019971 | S.CNR | 52808-1071 | T | 77.7/8.8 |
| J6 | 6510021721 | S.CNR | 30FLT-SM2-TB (LF) (SN) | T | 130.9/21.4 |
| J7 | 6510019971 | S.CNR | 52808-1071 | T | 55.4/8.8 |
| J201 | 6510022471 | S.CNR | 40FLT-SM2-TB (LF) (SN) | T | 6.2/28.7 |
| J202 | 6510022471 | S.CNR | 40FLT-SM2-TB (LF) (SN) | T | 18.1/28.7 |
| J203 | 6510020081 | S.CNR | 52808-2071 (2090) | T | 113.5/91.2 |
| J205 | 6510003401 | CNR | B04B-EH-S (LF) (SN) | | |
| J301 | 6510021181 | S.CNR | SM2 (8.0) B-BHS1TB(LF)(SN) | T | 131.7/38.9 |
| J302 | 6510022191 | S.CNR | B3B-PH-SM4-TB (LF) (SN) | T | 94.2/7.5 |
| J601 | 6510021861 | CNR | BH-800.4GG <LTC> | | |
| | | | | | |
| T201 | 5910000981 | TSM | 3319-T088-LF | | |
| | | | | | |
| BT601 | 3020000110 | LTM | CR2032 | | |

M.=Mounted side (T: Mounted on the Top side, B: Mounted on the Bottom side)
S.=Surface mount

## [RXPLL-A UNIT]

| REF NO. | ORDER NO. | DESCRIPTION | M. | H/V LOCATION |
|---|---|---|---|---|
| IC1 | 1130011530 | S.IC CD74HC4094M96 | T | 11.9/24.1 |
| IC2 | 1130009691 | S.IC TC74HCT7007AF (F) | T | 22.8/23.3 |
| IC51 | 1180001251 | S.IC TA7808F (TE16L,Q) | T | 77/16.7 |
| IC61 | 1180000421 | S.IC TA78L05F (TE12R,F) | B | 56.5/16 |
| IC101 | 1140007881 | S.IC TC190G08EFG0046JDZ/SC1246A | T | 31.3/89.7 |
| IC102 | 1130003831 | S.IC TC7S04F (TE85R,F) | T | 33.1/74.7 |
| IC104 | 1130003831 | S.IC TC7S04F (TE85R,F) | T | 31.7/101.1 |
| IC201 | 1130009230 | S.IC LMX2306TMX/NOPB | T | 27.9/38.8 |
| IC501 | 1140007881 | S.IC TC190G08EFG0046JDZ/SC1246A | T | 31.3/142.5 |
| IC502 | 1130003831 | S.IC TC7S04F (TE85R,F) | T | 24.8/127.4 |
| IC503 | 1130003831 | S.IC TC7S04F (TE85R,F) | T | 31.7/154.1 |
| IC651 | 1140004550 | S.IC M65343FP/SC1287 | T | 22.6/169.2 |
| IC652 | 1130003831 | S.IC TC7S04F (TE85R,F) | T | 13.7/163.1 |
| IC1051 | 1190002010 | S.IC SD5400CY <TOMO> | T | 176.9/99.9 |
| IC1081 | 1110006180 | S.IC UPG2009TB-E3 | B | 151.6/85.1 |
| IC1402 | 1190002110 | S.IC NJG1519KC1-TE3 | T | 117.3/69.5 |
| IC1403 | 1190002110 | S.IC NJG1519KC1-TE3 | T | 113.4/106.3 |
| IC1501 | 1110006121 | S.IC DBM9A41-G-TR | T | 121.2/124.5 |
| IC1502 | 1110006121 | S.IC DBM9A41-G-TR | T | 121.2/133 |
| IC1503 | 1110006100 | S.IC NJM5534MD-TE1 | T | 138.4/151.7 |
| IC1504 | 1110006100 | S.IC NJM5534MD-TE1 | T | 119.2/151.7 |
| IC1505 | 1110006190 | S.IC NJM074M-TE1 | T | 128.8/166.9 |
| IC1506 | 1110006100 | S.IC NJM5534MD-TE1 | T | 128.8/175.6 |
| IC1651 | 1130011921 | S.IC TC74LCX00F (EL,F) | T | 110/126.2 |
| IC1652 | 1110005420 | S.IC BA15532F-E2 | T | 139.8/175.6 |
| IC1653 | 1110005100 | S.IC NJM072BM-TE1 | B | 140/172 |
| IC1701 | 1130011530 | S.IC CD74HC4094M96 | T | 158/166.7 |
| IC1702 | 1130011530 | S.IC CD74HC4094M96 | T | 148.9/166.7 |
| IC1703 | 1160000131 | S.IC TD62783AFG (S,EL) | T | 157.3/154.8 |
| IC1704 | 1180000790 | S.IC AN78L10M (E1) | B | 183.2/159.8 |
| Q1 | 1590001050 | S.TR DTC114TUA T106 | B | 30.3/22.6 |
| Q30 | 1530002060 | S.TR 2SC4081 T106 R | T | 22.3/110.9 |
| Q41 | 1590000680 | S.TR DTC114EUA T106 | T | 12.8/34.2 |
| Q150 | 1560000331 | S.FET 2SK210-GR (TE85R,F) | T | 26.9/53 |
| Q151 | 1530002280 | S.TR 2SC4081 T106 S | B | 33.6/57.2 |
| Q152 | 1530002280 | S.TR 2SC4081 T106 S | B | 30.8/78.2 |
| Q201 | 1590001330 | S.TR DTA114EUA T106 | T | 29.6/34.1 |
| Q220 | 1560000331 | S.FET 2SK210-GR (TE85R,F) | T | 72.5/33.9 |
| Q230 | 1560000331 | S.FET 2SK210-GR (TE85R,F) | T | 72.5/46.4 |
| Q240 | 1560000331 | S.FET 2SK210-GR (TE85R,F) | T | 72.5/58.9 |
| Q250 | 1560000331 | S.FET 2SK210-GR (TE85R,F) | T | 72.5/71.4 |
| Q260 | 1560000331 | S.FET 2SK210-GR (TE85R,F) | T | 72.5/83.9 |
| Q270 | 1560000331 | S.FET 2SK210-GR (TE85R,F) | T | 72.5/95.8 |
| Q280 | 1590000680 | S.TR DTC114EUA T106 | T | 82.3/34.4 |
| Q281 | 1590000680 | S.TR DTC114EUA T106 | T | 82.3/46.9 |
| Q282 | 1590000680 | S.TR DTC114EUA T106 | T | 82.3/59.4 |
| Q283 | 1590000680 | S.TR DTC114EUA T106 | T | 82.3/71.9 |
| Q284 | 1590000680 | S.TR DTC114EUA T106 | T | 82.3/84.4 |
| Q285 | 1590000680 | S.TR DTC114EUA T106 | T | 82.3/96.4 |
| Q301 | 1530003432 | S.TR 2SC5226A-4-TL-E | T | 92.1/30.1 |
| Q302 | 1530003432 | S.TR 2SC5226A-4-TL-E | B | 89.1/42.5 |
| Q303 | 1530003432 | S.TR 2SC5226A-4-TL-E | B | 91.3/25.1 |
| Q341 | 1590000680 | S.TR DTC114EUA T106 | T | 86.3/36.7 |
| Q351 | 1580000751 | S.FET 3SK294 (TE85L,F) | T | 92.1/56.9 |
| Q352 | 1530003432 | S.TR 2SC5226A-4-TL-E | B | 89.2/64.5 |
| Q363 | 1590000680 | S.TR DTC114EUA T106 | T | 86.8/54.3 |
| Q364 | 1590001330 | S.TR DTA114EUA T106 | T | 86.8/57.4 |
| Q441 | 1590000680 | S.TR DTC114EUA T106 | T | 86.5/73.7 |
| Q502 | 1590000680 | S.TR DTC114EUA T106 | T | 41.9/128.8 |
| Q540 | 1530002060 | S.TR 2SC4081 T106 R | B | 58.7/141.2 |
| Q541 | 1560000331 | S.FET 2SK210-GR (TE85R,F) | T | 68.9/142.8 |
| Q561 | 1530003432 | S.TR 2SC5226A-4-TL-E | T | 70.6/153.8 |
| Q580 | 1530003432 | S.TR 2SC5226A-4-TL-E | T | 41.7/147.4 |
| Q591 | 1530003151 | S.TR 2SC4673D-TD-E | T | 61.7/166.5 |
| Q592 | 1520000561 | S.TR 2SB1123 T-TD-E | B | 52/165.3 |
| Q593 | 1590000680 | S.TR DTC114EUA T106 | B | 54.8/171.2 |
| Q680 | 1530002060 | S.TR 2SC4081 T106 R | T | 37.5/163.2 |
| Q702 | 1530002601 | S.TR 2SC4215-O (TE85R,F) | T | 31.4/110.9 |
| Q1001 | 1530003851 | S.TR 2SC5551F-TD-E | B | 174/9 |
| Q1004 | 1590001960 | S.TR XP4311 (TX) | T | 150/18.8 |
| Q1005 | 1590001960 | S.TR XP4311 (TX) | T | 145.9/18.8 |
| Q1006 | 1530003851 | S.TR 2SC5551F-TD-E | B | 150/37.6 |
| Q1007 | 1530003851 | S.TR 2SC5551F-TD-E | B | 176.5/42.5 |
| Q1008 | 1530003851 | S.TR 2SC5551F-TD-E | B | 160.5/42.5 |
| Q1101 | 1530003860 | TR 2SC3950D | | |
| Q1102 | 1590000680 | S.TR DTC114EUA T106 | T | 165.5/133.8 |
| Q1103 | 1520000561 | S.TR 2SB1123 T-TD-E | B | 168.6/127.8 |
| Q1104 | 1530003860 | TR 2SC3950D | | |
| Q1105 | 1530003842 | S.TR 2SC5501A-4-TR-E | T | 166.5/142.1 |
| Q1205 | 1590001960 | S.TR XP4311 (TX) | T | 158.8/55.6 |
| Q1209 | 1530003851 | S.TR 2SC5551F-TD-E | B | 121/34.9 |
| Q1210 | 1530003851 | S.TR 2SC5551F-TD-E | B | 111.5/34.9 |
| Q1211 | 1560001311 | S.FET MMBFU310LT1G | T | 159.5/96.4 |
| Q1212 | 1560001311 | S.FET MMBFU310LT1G | T | 153.5/96.4 |
| Q1213 | 1590000680 | S.TR DTC114EUA T106 | B | 156.9/123.7 |
| Q1214 | 1520000561 | S.TR 2SB1123 T-TD-E | B | 155.4/113.5 |
| Q1301 | 1530003151 | S.TR 2SC4673D-TD-E | T | 157.8/120 |
| Q1352 | 1530003851 | S.TR 2SC5551F-TD-E | B | 140/66.7 |
| Q1401 | 1530003842 | S.TR 2SC5501A-4-TR-E | T | 131.9/105.8 |
| Q1402 | 1530003021 | S.TR 2SC4402-3-TL-E | T | 123.4/111.8 |
| Q1403 | 1530003021 | S.TR 2SC4402-3-TL-E | T | 123.4/114.3 |
| Q1501 | 1530003450 | S.TR 2SC4835-R (TX) | T | 133.5/143.5 |
| Q1502 | 1530003450 | S.TR 2SC4835-R (TX) | T | 120.4/143.5 |
| Q1651 | 1530002601 | S.TR 2SC4215-O (TE85R,F) | B | 105.6/140.3 |
| Q1701 | 1590001960 | S.TR XP4311 (TX) | T | 106.6/43.9 |
| Q1702 | 1590001960 | S.TR XP4311 (TX) | T | 148.9/147.2 |
| Q1703 | 1590001960 | S.TR XP4311 (TX) | T | 146.4/147.2 |
| D101 | 1750000520 | S.DIO DAN222TL | T | 41.8/86.2 |
| D152 | 1720000590 | S.VCP MA357 (TX) | T | 17.6/59.9 |
| D153 | 1790000491 | S.DIO HSM88ASTR-E | T | 27.2/60.4 |

## [RXPLL-A UNIT]

| REF NO. | ORDER NO. | DESCRIPTION | M. | H/V LOCATION |
|---|---|---|---|---|
| D154 | 1790000491 | S.DIO HSM88ASTR-E | T | 27.2/63.8 |
| D201 | 1750000520 | S.DIO DAN222TL | T | 32.4/34.1 |
| D220 | 1720000590 | S.VCP MA357 (TX) | T | 50.8/31.8 |
| D221 | 1720000590 | S.VCP MA357 (TX) | T | 52.9/31.8 |
| D222 | 1790000620 | S.DIO MA77 (TX) | T | 82.6/29.8 |
| D230 | 1720000590 | S.VCP MA357 (TX) | T | 50.8/44.2 |
| D231 | 1720000590 | S.VCP MA357 (TX) | T | 52.9/44.2 |
| D232 | 1790000620 | S.DIO MA77 (TX) | T | 82.6/42.3 |
| D240 | 1720000590 | S.VCP MA357 (TX) | T | 50.8/56.7 |
| D241 | 1720000590 | S.VCP MA357 (TX) | T | 52.9/56.7 |
| D242 | 1790000620 | S.DIO MA77 (TX) | T | 82.6/54.8 |
| D250 | 1720000590 | S.VCP MA357 (TX) | T | 50.8/69.2 |
| D252 | 1790000620 | S.DIO MA77 (TX) | T | 82.6/67.3 |
| D261 | 1720000590 | S.VCP MA357 (TX) | T | 52.9/81.7 |
| D262 | 1790000620 | S.DIO MA77 (TX) | T | 82.6/79.8 |
| D270 | 1720000590 | S.VCP MA357 (TX) | T | 50.8/94.2 |
| D271 | 1720000590 | S.VCP MA357 (TX) | T | 52.4/96.7 |
| D272 | 1790000620 | S.DIO MA77 (TX) | T | 82.5/92 |
| D341 | 1790000620 | S.DIO MA77 (TX) | T | 90/37.2 |
| D342 | 1160000070 | S.DIO DAN202K T146 | B | 81.1/47.7 |
| D362 | 1790000620 | S.DIO MA77 (TX) | T | 88.3/65.5 |
| D363 | 1790000620 | S.DIO MA77 (TX) | T | 88.3/62 |
| D421 | 1790000620 | S.DIO MA77 (TX) | T | 91.9/85 |
| D441 | 1790000620 | S.DIO MA77 (TX) | T | 89.6/74.4 |
| D501 | 1750000520 | S.DIO DAN222TL | T | 42/132 |
| D542 | 1720000590 | S.VCP MA357 (TX) | T | 62.5/139.6 |
| D1101 | 1790000620 | S.DIO MA77 (TX) | T | 177.6/146.6 |
| D1102 | 1790000620 | S.DIO MA77 (TX) | T | 177.6/148.4 |
| D1351 | 1750000581 | S.DIO 1SV307 (TPH3,F) | T | 140.8/71.1 |
| D1653 | 1750000550 | S.DIO 1SS355 TE-17 | T | 138.9/167.2 |
| D1654 | 1750000550 | S.DIO 1SS355 TE-17 | T | 142.5/167.2 |
| D1701 | 1790001670 | S.DIO RB706F-40T106 | T | 170.5/160.8 |
| L1 | 6200003261 | S.COL NLV32T-101J | T | 10.8/15.4 |
| L2 | 6200003261 | S.COL NLV32T-101J | T | 29/19.9 |
| L10 | 6200003950 | S.COL HF50ACC 322513-T | T | 38.6/14.7 |
| L11 | 6200003950 | S.COL HF50ACC 322513-T | T | 13.8/15.4 |
| L12 | 6200003950 | S.COL HF50ACC 322513-T | T | 16.8/15.4 |
| L13 | 6200003950 | S.COL HF50ACC 322513-T | T | 29/15.4 |
| L20 | 6200003321 | S.COL NLV32T-3R3J | T | 85.9/123.8 |
| L30 | 6200005491 | S.COL NLV32T-331J | T | 20.6/120 |
| L101 | 6200001831 | S.COL NLV32T-100J | T | 38.3/72.8 |
| L151 | 6130002970 | COL LB-343 | | |
| L152 | 6200001831 | S.COL NLV32T-100J | T | 30/54.5 |
| L201 | 6200005011 | S.COL NLV25T-100J | T | 22.2/45 |
| L211 | 6200003661 | S.COL NLV25T-R68J | B | 45.4/35.3 |
| L220 | 6200010790 | S.COL C2520C-3R9G-A | T | 51.9/37.5 |
| L221 | 6190001421 | COL #E526GN-110502 | | |
| L222 | 6200010790 | S.COL C2520C-3R9G-A | T | 76.2/37.7 |
| L230 | 6200010830 | S.COL C2520C-3R3G-A | T | 51.9/50 |
| L231 | 6190001421 | COL #E526GN-110502 | | |
| L232 | 6200010830 | S.COL C2520C-3R3G-A | T | 76.2/50.2 |
| L240 | 6200010830 | S.COL C2520C-3R3G-A | T | 51.9/62.4 |
| L241 | 6190001421 | COL #E526GN-110502 | | |
| L242 | 6200010830 | S.COL C2520C-3R3G-A | T | 76.2/62.7 |
| L250 | 6200010820 | S.COL C2520C-2R7G-A | T | 51.9/74.9 |
| L251 | 6190001421 | COL #E526GN-110502 | | |
| L252 | 6200010820 | S.COL C2520C-2R7G-A | T | 76.2/75.2 |
| L260 | 6200010820 | S.COL C2520C-2R7G-A | T | 51.9/87.4 |
| L261 | 6190001411 | COL #E526GN-110501 | | |
| L262 | 6200010820 | S.COL C2520C-2R7G-A | T | 76.2/87.7 |
| L270 | 6200010810 | S.COL C2520C-2R2G-A | T | 51.9/99.8 |
| L271 | 6190001411 | COL #E526GN-110501 | | |
| L272 | 6200010810 | S.COL C2520C-2R2G-A | T | 76/100.2 |
| L280 | 6200005011 | S.COL NLV25T-100J | T | 67.4/25.5 |
| L302 | 6200001831 | S.COL NLV32T-100J | T | 89.3/42.6 |
| L331 | 6200002641 | S.COL NLV25T-R15J | T | 95.1/34.1 |
| L332 | 6200002411 | S.COL NLV25T-056J | B | 93.2/36 |
| L341 | 6200003261 | S.COL NLV32T-101J | T | 87/39.6 |
| L351 | 6200001831 | S.COL NLV32T-100J | T | 91.3/62 |
| L421 | 6200008641 | S.COL NLV32T-391J | T | 87/81 |
| L441 | 6200002601 | S.COL NLV25T-047J | T | 91.9/72.3 |
| L442 | 6200010730 | S.COL C2520C-68NG-A | T | 90.5/78.2 |
| L451 | 6200002641 | S.COL NLV25T-R15J | T | 95/81 |
| L452 | 6200003261 | S.COL NLV32T-101J | T | 87/78 |
| L501 | 6200001831 | S.COL NLV32T-100J | T | 31/125.8 |
| L530 | 6200003171 | S.COL NLV32T-330J | T | 14.6/134.9 |
| L531 | 6200003171 | S.COL NLV32T-330J | T | 14.6/130.8 |
| L532 | 6200003171 | S.COL NLV32T-330J | T | 15.5/127.1 |
| L541 | 6200010790 | S.COL C2520C-3R9G-A | T | 56.3/139.6 |
| L542 | 6190001421 | COL #E526GN-110502 | | |
| L543 | 6200010790 | S.COL C2520C-3R9G-A | T | 68.4/147.9 |
| L544 | 6200003261 | S.COL NLV32T-101J | B | 65.9/142.1 |
| L545 | 6200003261 | S.COL NLV32T-101J | B | 51.3/139.6 |
| L561 | 6200003261 | S.COL NLV32T-101J | B | 64/156 |
| L562 | 6200001831 | S.COL NLV32T-100J | B | 74.6/151.8 |
| L565 | 6150004250 | COL LS-471A (C-14922) | | |
| L566 | 6150004250 | COL LS-471A (C-14922) | | |
| L591 | 6200007790 | S.COL LQW2BHNR15J03L | T | 60.5/171.5 |
| L651 | 6200001831 | S.COL NLV32T-100J | T | 15.5/176.2 |
| L681 | 6200002981 | T 37.4/176.2 | | |
| L682 | 6200003041 | T 37.8/172.6 | | |
| L683 | 6200003051 | T 40.2/166.2 | | |
| L701 | 6200003261 | S.COL NLV32T-101J | T | 23.6/120 |
| L702 | 6150004971 | S.COL LS-522-LF | T | 37.6/108.6 |
| L703 | 6150004971 | S.COL LS-522-LF | T | 37.5/118.5 |
| L1001 | 6190001650 | COL ELC06D102E | | |
| L1002 | 6140004400 | COL LR-499 | | |
| L1004 | 6140003890 | COL LR-488 | | |
| L1005 | 6180001000 | COL LAL 04NA 102K | | |
| L1006 | 6140003900 | COL LR-489 | | |
| L1007 | 6140003800 | COL LR-439 | | |
| L1008 | 6190001650 | COL ELC06D102E | | |

M.=Mounted side (T: Mounted on the Top side, B: Mounted on the Bottom side)
S.=Surface mount

## [RXPLL-A UNIT]

| REF NO. | ORDER NO. | DESCRIPTION | | M. | H/V LOCATION |
|---|---|---|---|---|---|
| L1009 | 6190001650 | COL | ELC06D102E | | |
| L1010 | 6140003880 | COL | LR-486 | | |
| L1011 | 6140003880 | COL | LR-486 | | |
| L1012 | 6140003800 | COL | LR-439 | | |
| L1013 | 6200010680 | S.COL | C2520C-R22G-A (0.22U) | T | 155/55.2 |
| L1014 | 6200010680 | S.COL | C2520C-R22G-A (0.22U) | T | 157.9/12.4 |
| L1015 | 6200007790 | S.COL | LQW2BHNR15J03L | B | 163.5/27.5 |
| L1052 | 6200010740 | S.COL | C2520C-R27G-A | T | 177.8/74.6 |
| L1053 | 6200010740 | S.COL | C2520C-R27G-A | T | 173.8/73.5 |
| L1054 | 6200010740 | S.COL | C2520C-R27G-A | T | 169.4/72.6 |
| L1055 | 6140003960 | COL | LR-495 | | |
| L1056 | 6200010730 | S.COL | C2520C-68NG-A | T | 171/83.8 |
| L1058 | 6190001631 | COL | #E544EN-100021 | | |
| L1060 | 6200010730 | S.COL | C2520C-68NG-A | T | 149.1/76.4 |
| L1062 | 6200011450 | S.COL | C2520C-R39G-A | T | 145.1/81.4 |
| L1063 | 6200010650 | S.COL | C2520C-R12G-A (0.12U) | T | 140.9/82.5 |
| L1071 | 6200007780 | S.COL | LQW2BHNR12J03L | B | 164.9/79.2 |
| L1072 | 6200007780 | S.COL | LQW2BHNR12J03L | B | 168/76.1 |
| L1091 | 6200003950 | S.COL | HF50ACC 322513-T | B | 171/149 |
| L1092 | 6200003950 | S.COL | HF50ACC 322513-T | T | 149.7/136.5 |
| L1093 | 6200003950 | S.COL | HF50ACC 322513-T | T | 157/135.2 |
| L1101 | 6140003920 | COL | LR-491 | | |
| L1102 | 6200010650 | S.COL | C2520C-R12G-A (0.12U) | T | 176.9/117.9 |
| L1103 | 6180001250 | COL | LAL 04NA 3R3K | | |
| L1104 | 6200010870 | S.COL | C2520C-R33G-A (0.33U) | T | 178.3/135.9 |
| L1105 | 6140003910 | COL | LR-490 | | |
| L1151 | 6140004640 | COL | LR-519 | | |
| L1201 | 6200007780 | S.COL | LQW2BHNR12J03L | B | 119.3/17.4 |
| L1208 | 6140003800 | COL | LR-439 | | |
| L1209 | 6200001831 | S.COL | NLV32T-100J | T | 121.1/20.8 |
| L1210 | 6140004440 | COL | LR-503 | | |
| L1211 | 6200009690 | S.COL | LQH43CN101K03L | T | 115.7/34.6 |
| L1212 | 6200001831 | S.COL | NLV32T-100J | T | 106.8/20.8 |
| L1213 | 6140004440 | COL | LR-503 | | |
| L1214 | 6200009690 | S.COL | LQH43CN101K03L | T | 105.9/34.8 |
| L1216 | 6140003800 | COL | LR-439 | | |
| L1217 | 6200007750 | S.COL | LQW2BHN56NJ03L | T | 147.9/63.7 |
| L1218 | 6200007770 | S.COL | LQW2BHNR10J03L | T | 153.3/65.1 |
| L1219 | 6200007790 | S.COL | LQW2BHNR15J03L | T | 153.2/68.4 |
| L1220 | 6140000930 | COL | LR-116 | | |
| L1221 | 6200003261 | S.COL | NLV32T-101J | B | 149.5/110.9 |
| L1222 | 6150001770 | COL | LS-198 | | |
| L1223 | 6200007750 | S.COL | LQW2BHN56NJ03L | B | 151.3/100.7 |
| L1228 | 6200010870 | S.COL | C2520C-R33G-A (0.33U) | T | 158.7/71.3 |
| L1229 | 6200003950 | S.COL | HF50ACC 322513-T | B | 164.7/115 |
| L1301 | 6200008090 | S.COL | LQW2BHN68NJ03L | T | 157.1/111.9 |
| L1302 | 6200008090 | S.COL | LQW2BHN68NJ03L | T | 156.4/115.5 |
| L1303 | 6200008090 | S.COL | LQW2BHN68NJ03L | T | 153.4/117.5 |
| L1304 | 6200010870 | S.COL | C2520C-R33G-A (0.33U) | T | 153.8/123 |
| L1305 | 6200003001 | S.COL | NLV32T-R22J | T | 159.2/124.5 |
| L1306 | 6200001831 | S.COL | NLV32T-100J | B | 152.7/118.6 |
| L1307 | 6200003001 | S.COL | NLV32T-R22J | T | 153.3/112 |
| L1351 | 6200001831 | S.COL | NLV32T-100J | T | 143/76.4 |
| L1353 | 6200010740 | S.COL | C2520C-R27G-A | T | 141.6/67.5 |
| L1354 | 6200001831 | S.COL | NLV32T-100J | T | 136.4/68 |
| L1401 | 6150004280 | COL | LS-484B (C-14927) | | |
| L1402 | 6150004280 | COL | LS-484B (C-14927) | | |
| L1403 | 6150004280 | COL | LS-484B (C-14927) | | |
| L1404 | 6150004280 | COL | LS-484B (C-14927) | | |
| L1405 | 6200007770 | S.COL | LQW2BHNR10J03L | B | 112.5/111.4 |
| L1406 | 6200007750 | S.COL | LQW2BHN56NJ03L | B | 116.6/111.4 |
| L1407 | 6140003930 | COL | LR-492 | | |
| L1408 | 6190001621 | COL | #E544EN-100028 | | |
| L1409 | 6200003191 | S.COL | NLV32T-470J | B | 135.8/125.4 |
| L1410 | 6150004280 | COL | LS-484B (C-14927) | | |
| L1411 | 6150004280 | COL | LS-484B (C-14927) | | |
| L1501 | 6200003520 | S.COL | ELJFB 102K-F | T | 142.1/145.1 |
| L1652 | 6200002520 | S.COL | ELJNC R18K-F | T | 112.9/133.1 |
| L1653 | 6200001831 | S.COL | NLV32T-100J | B | 105.4/124.6 |
| L1654 | 6200001831 | S.COL | NLV32T-100J | B | 112.4/141.9 |
| L1655 | 6200001831 | S.COL | NLV32T-100J | B | 124.7/139.8 |
| L1701 | 6200001831 | S.COL | NLV32T-100J | T | 167/160 |
| L1702 | 6200003950 | S.COL | HF50ACC 322513-T | T | 175.6/169.8 |
| L1703 | 6200003950 | S.COL | HF50ACC 322513-T | T | 172.6/169.8 |
| L1704 | 6200003950 | S.COL | HF50ACC 322513-T | T | 169.6/169.8 |
| L1705 | 6200003950 | S.COL | HF50ACC 322513-T | T | 165.5/169.8 |
| L1803 | 6200003950 | S.COL | HF50ACC 322513-T | B | 132/54.8 |
| L1804 | 6200003950 | S.COL | HF50ACC 322513-T | B | 118/154.8 |
| L1805 | 6200003950 | S.COL | HF50ACC 322513-T | B | 155.2/132 |
| L1807 | 6200003950 | S.COL | HF50ACC 322513-T | B | 118/151.3 |
| L1808 | 6200003950 | S.COL | HF50ACC 322513-T | B | 141.3/162 |
| L1809 | 6200003950 | S.COL | HF50ACC 322513-T | B | 149.5/115.6 |
| | | | | | |
| R1 | 7030005871 | S.RES | ERA3YKD 104V (100 k) | T | 32.5/19.2 |
| R2 | 7030005321 | S.RES | ERA3YED 103V (10 k) | T | 31.2/19.2 |
| R3 | 7030003550 | S.RES | ERJ3GEYJ 822 V (8.2 k) | T | 16.9/23.5 |
| R4 | 7030003550 | S.RES | ERJ3GEYJ 822 V (8.2 k) | T | 16.9/24.8 |
| R5 | 7030003550 | S.RES | ERJ3GEYJ 822 V (8.2 k) | T | 13.3/31.3 |
| R6 | 7030003550 | S.RES | ERJ3GEYJ 822 V (8.2 k) | T | 13.3/30 |
| R7 | 7030003500 | S.RES | ERJ3GEYJ 332 V (3.3 k) | B | 26.7/12.9 |
| R8 | 7030003470 | S.RES | ERJ3GEYJ 182 V (1.8 k) | B | 28.2/14.6 |
| R9 | 7030003680 | S.RES | ERJ3GEYJ 104 V (100 k) | B | 27.5/10.6 |
| R10 | 7030003360 | S.RES | ERJ3GEYJ 221 V (220) | T | 19/16 |
| R11 | 7030003360 | S.RES | ERJ3GEYJ 221 V (220) | T | 20.3/16 |
| R12 | 7030003360 | S.RES | ERJ3GEYJ 221 V (220) | T | 22.4/16 |
| R13 | 7030003360 | S.RES | ERJ3GEYJ 221 V (220) | T | 23.7/16 |
| R14 | 7030003360 | S.RES | ERJ3GEYJ 221 V (220) | T | 25/16 |
| R15 | 7030003360 | S.RES | ERJ3GEYJ 221 V (220) | T | 26.4/16.2 |
| R16 | 7030003360 | S.RES | ERJ3GEYJ 221 V (220) | T | 32.5/15.4 |
| R17 | 7030003360 | S.RES | ERJ3GEYJ 221 V (220) | T | 33.8/15.4 |
| R30 | 7030003240 | S.RES | ERJ3GEYJ 220 V (22) | T | 21.7/113.7 |
| R31 | 7030003600 | S.RES | ERJ3GEYJ 223 V (22 k) | T | 20.4/111.1 |
| R32 | 7030003320 | S.RES | ERJ3GEYJ 101 V (100) | T | 23/113.7 |

## [RXPLL-A UNIT]

| REF NO. | ORDER NO. | DESCRIPTION | | M. | H/V LOCATION |
|---|---|---|---|---|---|
| R33 | 7030003340 | S.RES | ERJ3GEYJ 151 V (150) | T | 19.1/115 |
| R51 | 7030011030 | S.RES | ERJ1TYJ 270U (27) | T | 66.3/13.9 |
| R61 | 7030011030 | S.RES | ERJ1TYJ 270U (27) | T | 45.1/13.9 |
| R101 | 7030003740 | S.RES | 330K ERJ3GE | T | 34.1/101.5 |
| R103 | 7030007230 | S.RES | ERA3YED 102V (1 k) | T | 25.1/100.3 |
| R104 | 7030007230 | S.RES | ERA3YED 102V (1 k) | T | 26.4/100.3 |
| R105 | 7030007230 | S.RES | ERA3YED 102V (1 k) | T | 27.8/100.3 |
| R106 | 7030003360 | S.RES | ERJ3GEYJ 221 V (220) | T | 29.1/100.3 |
| R107 | 7030003320 | S.RES | ERJ3GEYJ 101 V (100) | T | 38/101.5 |
| R108 | 7030007230 | S.RES | ERA3YED 102V (1 k) | T | 28.9/79 |
| R109 | 7030007230 | S.RES | ERA3YED 102V (1 k) | T | 41.9/84.5 |
| R110 | 7030007220 | S.RES | ERA3YED 202V (2 k) | T | 14.6/100.5 |
| R111 | 7030007220 | S.RES | ERA3YED 202V (2 k) | T | 17.2/100.5 |
| R112 | 7030007220 | S.RES | ERA3YED 202V (2 k) | T | 17.2/99.2 |
| R113 | 7030007220 | S.RES | ERA3YED 202V (2 k) | T | 17.2/97.9 |
| R114 | 7030007220 | S.RES | ERA3YED 202V (2 k) | T | 17.2/96.6 |
| R115 | 7030007220 | S.RES | ERA3YED 202V (2 k) | T | 17.2/95.2 |
| R116 | 7030007220 | S.RES | ERA3YED 202V (2 k) | T | 17.2/93.9 |
| R117 | 7030007220 | S.RES | ERA3YED 202V (2 k) | T | 17.2/92.6 |
| R118 | 7030007200 | S.RES | ERA3YEB 202V (2 k) | T | 17.2/91.3 |
| R119 | 7030007200 | S.RES | ERA3YEB 202V (2 k) | T | 17.2/89.6 |
| R120 | 7030007200 | S.RES | ERA3YEB 202V (2 k) | T | 17.2/87 |
| R121 | 7030007200 | S.RES | ERA3YEB 202V (2 k) | T | 17.2/84.4 |
| R122 | 7030007200 | S.RES | ERA3YEB 202V (2 k) | T | 17.2/81.8 |
| R123 | 7030007230 | S.RES | ERA3YED 102V (1 k) | T | 14.6/99.2 |
| R124 | 7030007230 | S.RES | ERA3YED 102V (1 k) | T | 14.6/97.9 |
| R125 | 7030007230 | S.RES | ERA3YED 102V (1 k) | T | 14.6/96.6 |
| R126 | 7030007230 | S.RES | ERA3YED 102V (1 k) | T | 14.6/95.2 |
| R127 | 7030007230 | S.RES | ERA3YED 102V (1 k) | T | 14.6/93.9 |
| R128 | 7030007230 | S.RES | ERA3YED 102V (1 k) | T | 14.6/92.6 |
| R129 | 7030007210 | S.RES | ERA3YEB 102V (1 k) | T | 14.6/91.3 |
| R130 | 7030007210 | S.RES | ERA3YEB 102V (1 k) | T | 14.6/89.6 |
| R131 | 7030007210 | S.RES | ERA3YEB 102V (1 k) | T | 14.6/88.3 |
| R132 | 7030007210 | S.RES | ERA3YEB 102V (1 k) | T | 14.6/87 |
| R133 | 7030007210 | S.RES | ERA3YEB 102V (1 k) | T | 14.6/85.7 |
| R134 | 7030009861 | S.RES | ERA3YED 471V (470) | T | 14.6/84.4 |
| R135 | 7030003860 | S.RES | ERJ3GE JPW V | T | 30.4/75.8 |
| R136 | 7030003800 | S.RES | ERJ3GEYJ 105 V (1 M) | T | 33/77.1 |
| R137 | 7030003200 | S.RES | ERJ3GEYJ 100 V (10) | T | 35.5/75.8 |
| R138 | 7030003860 | S.RES | ERJ3GE JPW V | T | 16.8/78.6 |
| R139 | 7030003860 | S.RES | ERJ3GE JPW V | T | 17.6/75.8 |
| R150 | 7030003330 | S.RES | ERJ3GEYJ 121 V (120) | B | 37.8/86.2 |
| R151 | 7030003220 | S.RES | ERJ3GEYJ 150 V (15) | B | 38.6/88.1 |
| R152 | 7030005871 | S.RES | ERA3YKD 104V (100 k) | B | 36.2/82.5 |
| R153 | 7030005321 | S.RES | ERA3YED 103V (10 k) | T | 19.2/62.7 |
| R154 | 7030003320 | S.RES | ERJ3GEYJ 101 V (100) | B | 26.3/54.1 |
| R155 | 7030003350 | S.RES | ERJ3GEYJ 181 V (180) | B | 23/54.1 |
| R156 | 7030005871 | S.RES | ERA3YKD 104V (100 k) | T | 24.6/53.1 |
| R157 | 7030005871 | S.RES | ERA3YKD 104V (100 k) | T | 26.9/58 |
| R158 | 7030003340 | S.RES | ERJ3GEYJ 151 V (150) | T | 30/57.3 |
| R159 | 7030003320 | S.RES | ERJ3GEYJ 101 V (100) | B | 33.6/61.4 |
| R160 | 7030003360 | S.RES | ERJ3GEYJ 221 V (220) | B | 33.6/59.6 |
| R161 | 7030003640 | S.RES | ERJ3GEYJ 473 V (47 k) | B | 33.6/54.8 |
| R163 | 7030003220 | S.RES | ERJ3GEYJ 150 V (15) | B | 30.2/56.6 |
| R164 | 7030003310 | S.RES | ERJ3GEYJ 820 V (82) | B | 34.1/70.4 |
| R165 | 7030003320 | S.RES | ERJ3GEYJ 101 V (100) | B | 30.8/70.4 |
| R166 | 7030003320 | S.RES | ERJ3GEYJ 101 V (100) | B | 30.8/72.2 |
| R167 | 7030003240 | S.RES | ERJ3GEYJ 220 V (22) | B | 37.4/75.8 |
| R168 | 7030003360 | S.RES | ERJ3GEYJ 221 V (220) | B | 34.1/75.8 |
| R169 | 7030003640 | S.RES | ERJ3GEYJ 473 V (47 k) | B | 30.8/75.8 |
| R202 | 7030007230 | S.RES | ERA3YED 102V (1 k) | T | 22.2/39.7 |
| R203 | 7030007230 | S.RES | ERA3YED 102V (1 k) | T | 22.2/38.4 |
| R204 | 7030003360 | S.RES | ERJ3GEYJ 221 V (220) | T | 22.2/37.1 |
| R205 | 7030005321 | S.RES | ERA3YED 103V (10 k) | T | 27.4/34 |
| R206 | 7030003220 | S.RES | ERJ3GEYJ 150 V (15) | T | 31.1/45.7 |
| R210 | 7030005351 | S.RES | ERA3YED 182V (1.8 k) | T | 35.6/37.5 |
| R217 | 7030009651 | S.RES | ERA3YHD 820V (82) | B | 40.4/42.8 |
| R219 | 7030009691 | S.RES | ERA3YED 101V (100) | B | 40/35.7 |
| R220 | 7030005871 | S.RES | ERA3YKD 104V (100 k) | T | 73.2/37.6 |
| R221 | 7030005871 | S.RES | ERA3YKD 104V (100 k) | T | 72.3/30.9 |
| R222 | 7030003400 | S.RES | ERJ3GEYJ 471 V (470) | T | 81.4/38.3 |
| R223 | 7030007230 | S.RES | ERA3YED 102V (1 k) | T | 81.9/31.9 |
| R224 | 7030003320 | S.RES | ERJ3GEYJ 101 V (100) | T | 73.2/40.2 |
| R230 | 7030005871 | S.RES | ERA3YKD 104V (100 k) | T | 73.2/50.1 |
| R231 | 7030005871 | S.RES | ERA3YKD 104V (100 k) | T | 72.3/43.3 |
| R232 | 7030003360 | S.RES | ERJ3GEYJ 221 V (220) | T | 81.4/50.8 |
| R233 | 7030007230 | S.RES | ERA3YED 102V (1 k) | T | 81.9/44.4 |
| R234 | 7030003320 | S.RES | ERJ3GEYJ 101 V (100) | T | 73.2/52.7 |
| R240 | 7030005871 | S.RES | ERA3YKD 104V (100 k) | T | 73.2/62.6 |
| R241 | 7030005871 | S.RES | ERA3YKD 104V (100 k) | T | 72.3/55.8 |
| R242 | 7030003360 | S.RES | ERJ3GEYJ 221 V (220) | T | 81.4/63.3 |
| R243 | 7030007230 | S.RES | ERA3YED 102V (1 k) | T | 81.9/56.9 |
| R244 | 7030003320 | S.RES | ERJ3GEYJ 101 V (100) | T | 73.2/65.2 |
| R250 | 7030005871 | S.RES | ERA3YKD 104V (100 k) | T | 73.2/75.1 |
| R251 | 7030005871 | S.RES | ERA3YKD 104V (100 k) | T | 72.3/68.4 |
| R252 | 7030003360 | S.RES | ERJ3GEYJ 221 V (220) | T | 81.4/75.8 |
| R253 | 7030007230 | S.RES | ERA3YED 102V (1 k) | T | 81.9/69.4 |
| R254 | 7030003320 | S.RES | ERJ3GEYJ 101 V (100) | T | 73.2/77.7 |
| R260 | 7030005871 | S.RES | ERA3YKD 104V (100 k) | T | 73.2/87.6 |
| R261 | 7030005871 | S.RES | ERA3YKD 104V (100 k) | T | 72.3/80.9 |
| R262 | 7030003400 | S.RES | ERJ3GEYJ 471 V (470) | T | 81.4/88.3 |
| R263 | 7030007230 | S.RES | ERA3YED 102V (1 k) | T | 81.9/81.9 |
| R264 | 7030003320 | S.RES | ERJ3GEYJ 101 V (100) | T | 73.2/90.2 |
| R270 | 7030005871 | S.RES | ERA3YKD 104V (100 k) | T | 73.2/99.5 |
| R271 | 7030005871 | S.RES | ERA3YKD 104V (100 k) | T | 72.3/92.8 |
| R272 | 7030003360 | S.RES | ERJ3GEYJ 221 V (220) | T | 81.4/100.8 |
| R273 | 7030007230 | S.RES | ERA3YED 102V (1 k) | T | 81.9/93.9 |
| R274 | 7030003320 | S.RES | ERJ3GEYJ 101 V (100) | T | 73.2/102.1 |
| R301 | 7030003200 | S.RES | ERJ3GEYJ 100 V (10) | T | 86.5/30.6 |
| R302 | 7030007230 | S.RES | ERA3YED 102V (1 k) | T | 86.5/29.3 |
| R303 | 7030003360 | S.RES | ERJ3GEYJ 221 V (220) | T | 92.1/28 |
| R304 | 7030003490 | S.RES | ERJ3GEYJ 272 V (2.7 k) | T | 94/30.1 |
| R305 | 7030003510 | S.RES | ERJ3GEYJ 392 V (3.9 k) | T | 95.3/30.1 |
| R306 | 7030003360 | S.RES | ERJ3GEYJ 221 V (220) | T | 94.7/32.2 |

M.=Mounted side (T: Mounted on the Top side, B: Mounted on the Bottom side)
S.=Surface mount

## [RXPLL-A UNIT]

| REF NO. | ORDER NO. | DESCRIPTION | M. | H/V LOCATION |
|---|---|---|---|---|
| R307 | 7030009841 | S.RES ERA3YHD 330V (33) | T | 92.1/32.2 |
| R308 | 7030009851 | S.RES ERA3YED 271V (270) | B | 92.6/43.4 |
| R309 | 7030003540 | S.RES ERJ3GEYJ 682 V (6.8 k) | B | 89.1/47 |
| R310 | 7030003500 | S.RES ERJ3GEYJ 332 V (3.3 k) | B | 92.6/47 |
| R311 | 7030003350 | S.RES ERJ3GEYJ 181 V (180) | B | 89.1/45.2 |
| R312 | 7030003360 | S.RES ERJ3GEYJ 221 V (220) | B | 92.4/27.8 |
| R313 | 7030003490 | S.RES ERJ3GEYJ 272 V (2.7 k) | B | 91.1/23.1 |
| R314 | 7030003510 | S.RES ERJ3GEYJ 392 V (3.9 k) | B | 88.3/23.1 |
| R315 | 7030003360 | S.RES ERJ3GEYJ 221 V (220) | B | 87.5/25.1 |
| R316 | 7030003280 | S.RES ERJ3GEYJ 470 V (47) | B | 78.3/26.1 |
| R317 | 7030006220 | S.RES ERJ12YJ470U (47) | B | 90/31.4 |
| R318 | 7030009841 | S.RES ERA3YHD 330V (33) | B | 92.6/41.6 |
| R341 | 7030007230 | S.RES ERA3YED 102V (1 k) | T | 92.1/40.1 |
| R342 | 7030005321 | S.RES ERA3YED 103V (10 k) | T | 86.5/32.2 |
| R343 | 7030007230 | S.RES ERA3YED 102V (1 k) | T | 89.3/34.8 |
| R351 | 7030003200 | S.RES ERJ3GEYJ 100 V (10) | B | 89.1/52.4 |
| R352 | 7030010980 | S.RES ERA3YHD 470V (47) | T | 89.3/55.8 |
| R353 | 7030009591 | S.RES ERA3YED 472V (4.7 k) | T | 89.3/54.5 |
| R354 | 7030009591 | S.RES ERA3YED 472V (4.7 k) | T | 89.3/50.4 |
| R355 | 7030009591 | S.RES ERA3YED 472V (4.7 k) | T | 89.3/53.2 |
| R356 | 7030003320 | S.RES ERJ3GEYJ 101 V (100) | T | 89.3/57.1 |
| R357 | 7310005580 | S.TRI TMC3ADCS3X 4.7K | T | 93.6/52.7 |
| R358 | 7030010980 | S.RES ERA3YHD 470V (47) | T | 94.9/56.4 |
| R359 | 7030003320 | S.RES ERJ3GEYJ 101 V (100) | T | 94.9/59 |
| R360 | 7030003320 | S.RES ERJ3GEYJ 101 V (100) | B | 92.6/63.9 |
| R361 | 7030003490 | S.RES ERJ3GEYJ 272 V (2.7 k) | B | 89.2/62.1 |
| R362 | 7030003510 | S.RES ERJ3GEYJ 392 V (3.9 k) | B | 92.6/60.3 |
| R363 | 7030003320 | S.RES ERJ3GEYJ 101 V (100) | B | 92.6/65.7 |
| R364 | 7030003410 | S.RES ERJ3GEYJ 561 V (560) | T | 94.9/82.9 |
| R365 | 7030007860 | S.RES ERJ3GEYJ 8R2V (8.2) | T | 92/83.4 |
| R366 | 7030003410 | S.RES ERJ3GEYJ 561 V (560) | T | 94.9/84.2 |
| R368 | 7030005321 | S.RES ERA3YED 103V (10 k) | T | 86.1/59.6 |
| R369 | 7030008240 | S.RES ERJ12Y0R00U | B | 95.3/57.1 |
| R421 | 7030007230 | S.RES ERA3YED 102V (1 k) | T | 92.1/87.8 |
| R425 | 7030003410 | S.RES ERJ3GEYJ 561 V (560) | T | 90.1/81.6 |
| R427 | 7030003320 | S.RES ERJ3GEYJ 101 V (100) | B | 86.8/87.3 |
| R428 | 7030009861 | S.RES ERA3YED 471V (470) | B | 92.1/88 |
| R441 | 7030007230 | S.RES ERA3YED 102V (1 k) | T | 92.1/75.5 |
| R442 | 7030005321 | S.RES ERA3YED 103V (10 k) | T | 88.9/70.9 |
| R443 | 7030007230 | S.RES ERA3YED 102V (1 k) | T | 88.9/72.2 |
| R501 | 7030003360 | S.RES ERJ3GEYJ 221 V (220) | T | 29.2/153.1 |
| R502 | 7030007230 | S.RES ERA3YED 102V (1 k) | T | 27.9/153.1 |
| R503 | 7030007230 | S.RES ERA3YED 102V (1 k) | T | 26.5/153.1 |
| R504 | 7030007230 | S.RES ERA3YED 102V (1 k) | T | 25.2/153.1 |
| R506 | 7030003800 | S.RES ERJ3GEYJ 105 V (1 M) | T | 34/154.5 |
| R509 | 7030007230 | S.RES ERA3YED 102V (1 k) | T | 42.5/136 |
| R510 | 7030007220 | S.RES ERA3YED 202V (2 k) | T | 14.6/153.6 |
| R511 | 7030007220 | S.RES ERA3YED 202V (2 k) | T | 17.2/153.6 |
| R512 | 7030007220 | S.RES ERA3YED 202V (2 k) | T | 17.2/152.3 |
| R513 | 7030007220 | S.RES ERA3YED 202V (2 k) | T | 17.2/151 |
| R514 | 7030007220 | S.RES ERA3YED 202V (2 k) | T | 17.2/149.7 |
| R515 | 7030007220 | S.RES ERA3YED 202V (2 k) | T | 17.2/148.3 |
| R516 | 7030007220 | S.RES ERA3YED 202V (2 k) | T | 17.2/147 |
| R517 | 7030007220 | S.RES ERA3YED 202V (2 k) | T | 17.2/145.7 |
| R518 | 7030007200 | S.RES ERA3YEB 202V (2 k) | T | 17.2/144.4 |
| R519 | 7030007200 | S.RES ERA3YEB 202V (2 k) | T | 17.2/142.7 |
| R520 | 7030007200 | S.RES ERA3YEB 202V (2 k) | T | 17.2/141.4 |
| R521 | 7030007200 | S.RES ERA3YEB 202V (2 k) | T | 17.2/140.1 |
| R522 | 7030007200 | S.RES ERA3YEB 202V (2 k) | T | 17.2/138.8 |
| R523 | 7030007230 | S.RES ERA3YED 102V (1 k) | T | 14.6/152.3 |
| R524 | 7030007230 | S.RES ERA3YED 102V (1 k) | T | 14.6/151 |
| R525 | 7030007230 | S.RES ERA3YED 102V (1 k) | T | 14.6/149.7 |
| R526 | 7030007230 | S.RES ERA3YED 102V (1 k) | T | 14.6/148.3 |
| R527 | 7030007230 | S.RES ERA3YED 102V (1 k) | T | 14.6/147 |
| R528 | 7030007230 | S.RES ERA3YED 102V (1 k) | T | 14.6/145.7 |
| R529 | 7030007210 | S.RES ERA3YEB 102V (1 k) | T | 14.6/144.4 |
| R530 | 7030007210 | S.RES ERA3YEB 102V (1 k) | T | 14.6/142.7 |
| R531 | 7030007210 | S.RES ERA3YEB 102V (1 k) | T | 14.6/141.4 |
| R532 | 7030007210 | S.RES ERA3YEB 102V (1 k) | T | 14.6/140.1 |
| R533 | 7030007210 | S.RES ERA3YEB 102V (1 k) | T | 14.6/138.8 |
| R534 | 7030003860 | S.RES ERJ3GE JPW V | T | 22.2/127.6 |
| R535 | 7030003800 | S.RES ERJ3GEYJ 105 V (1 M) | T | 24.8/129.8 |
| R536 | 7030003200 | S.RES ERJ3GEYJ 100 V (10) | T | 28/128.3 |
| R537 | 7030007230 | S.RES ERA3YED 102V (1 k) | T | 30.3/131.9 |
| R538 | 7030003360 | S.RES ERJ3GEYJ 221 V (220) | B | 34.8/146.5 |
| R540 | 7030007230 | S.RES ERA3YED 102V (1 k) | B | 52.3/142.8 |
| R544 | 7030005871 | S.RES ERA3YKD 104V (100 k) | T | 69.4/140.4 |
| R545 | 7030005871 | S.RES ERA3YKD 104V (100 k) | T | 69.4/139.1 |
| R546 | 7030009861 | S.RES ERA3YED 471V (470) | T | 67.4/150.7 |
| R548 | 7030009591 | S.RES ERA3YED 472V (4.7 k) | B | 43.4/136.5 |
| R550 | 7030009691 | S.RES ERA3YED 101V (100) | B | 43.4/134.7 |
| R554 | 7030009891 | S.RES ERA3YED 151V (150) | B | 47.2/133.9 |
| R555 | 7030003380 | S.RES ERJ3GEYJ 331 V (330) | B | 61.9/142.1 |
| R556 | 7030005981 | S.RES ERA3YED 333V (33 k) | B | 44.2/128.2 |
| R561 | 7030003200 | S.RES ERJ3GEYJ 100 V (10) | T | 71.3/148.5 |
| R562 | 7030003360 | S.RES ERJ3GEYJ 221 V (220) | T | 65.7/155.5 |
| R563 | 7030003490 | S.RES ERJ3GEYJ 272 V (2.7 k) | T | 70.4/151.9 |
| R564 | 7030003510 | S.RES ERJ3GEYJ 392 V (3.9 k) | T | 70.4/150.6 |
| R565 | 7030003360 | S.RES ERJ3GEYJ 221 V (220) | T | 67/155.5 |
| R570 | 7030003230 | S.RES ERJ3GEYJ 180 V (18) | T | 63.1/155.5 |
| R571 | 7030003230 | S.RES ERJ3GEYJ 180 V (18) | T | 58.5/155 |
| R572 | 7030003290 | S.RES ERJ3GEYJ 560 V (56) | B | 57.2/156.3 |
| R580 | 7030009861 | S.RES ERA3YED 471V (470) | T | 41.9/153.7 |
| R581 | 7030003360 | S.RES ERJ3GEYJ 221 V (220) | T | 41.9/145.5 |
| R582 | 7030003600 | S.RES ERJ3GEYJ 223 V (22 k) | T | 41.9/149.5 |
| R591 | 7030003320 | S.RES ERJ3GEYJ 101 V (100) | T | 58.2/169.9 |
| R592 | 7030005321 | S.RES ERA3YED 103V (10 k) | T | 58.5/167.9 |
| R593 | 7030003480 | S.RES ERJ3GEYJ 222 V (2.2 k) | T | 58.5/165.1 |
| R594 | 7030003320 | S.RES ERJ3GEYJ 101 V (100) | B | 61.9/168.1 |
| R595 | 7030003640 | S.RES ERJ3GEYJ 473 V (47 k) | B | 55.9/165.3 |
| R596 | 7030003540 | S.RES ERJ3GEYJ 682 V (6.8 k) | B | 54.7/168.9 |
| R651 | 7030007230 | S.RES ERA3YED 102V (1 k) | B | 23.5/177.1 |
| R652 | 7030003360 | S.RES ERJ3GEYJ 221 V (220) | T | 13.5/170.8 |
| R653 | 7030007230 | S.RES ERA3YED 102V (1 k) | T | 13.5/169.5 |

## [RXPLL-A UNIT]

| REF NO. | ORDER NO. | DESCRIPTION | M. | H/V LOCATION |
|---|---|---|---|---|
| R654 | 7030007230 | S.RES ERA3YED 102V (1 k) | T | 13.5/168.2 |
| R656 | 7030003800 | S.RES ERJ3GEYJ 105 V (1 M) | T | 13.4/165.6 |
| R657 | 7030003320 | S.RES ERJ3GEYJ 101 V (100) | T | 20.2/161.4 |
| R661 | 7030007220 | S.RES ERA3YED 202V (2 k) | T | 31.7/162.8 |
| R662 | 7030007220 | S.RES ERA3YED 202V (2 k) | T | 31.7/164.1 |
| R663 | 7030007220 | S.RES ERA3YED 202V (2 k) | T | 31.7/165.4 |
| R664 | 7030007220 | S.RES ERA3YED 202V (2 k) | T | 31.7/166.7 |
| R665 | 7030007220 | S.RES ERA3YED 202V (2 k) | T | 31.7/168 |
| R666 | 7030007220 | S.RES ERA3YED 202V (2 k) | T | 31.7/169.3 |
| R667 | 7030007220 | S.RES ERA3YED 202V (2 k) | T | 31.7/170.6 |
| R668 | 7030007220 | S.RES ERA3YED 202V (2 k) | T | 31.7/171.9 |
| R669 | 7030007200 | S.RES ERA3YEB 202V (2 k) | T | 31.7/173.2 |
| R670 | 7030007200 | S.RES ERA3YEB 202V (2 k) | T | 31.7/174.5 |
| R671 | 7030007200 | S.RES ERA3YEB 202V (2 k) | T | 31.7/175.8 |
| R673 | 7030007230 | S.RES ERA3YED 102V (1 k) | T | 34.3/165.4 |
| R674 | 7030007230 | S.RES ERA3YED 102V (1 k) | T | 34.3/166.7 |
| R675 | 7030007230 | S.RES ERA3YED 102V (1 k) | T | 34.3/168 |
| R676 | 7030007230 | S.RES ERA3YED 102V (1 k) | T | 34.3/169.3 |
| R677 | 7030007230 | S.RES ERA3YED 102V (1 k) | T | 34.3/170.6 |
| R678 | 7030007230 | S.RES ERA3YED 102V (1 k) | T | 34.3/171.9 |
| R679 | 7030007210 | S.RES ERA3YEB 102V (1 k) | T | 34.3/173.2 |
| R680 | 7030007210 | S.RES ERA3YEB 102V (1 k) | T | 34.3/174.5 |
| R681 | 7030007210 | S.RES ERA3YEB 102V (1 k) | T | 34.3/175.8 |
| R685 | 7030003460 | S.RES ERJ3GEYJ 152 V (1.5 k) | T | 38.4/169.7 |
| R686 | 7030003320 | S.RES ERJ3GEYJ 101 V (100) | T | 40.3/163.4 |
| R687 | 7030003470 | S.RES ERJ3GEYJ 182 V (1.8 k) | T | 37.4/165.1 |
| R688 | 7030003480 | S.RES ERJ3GEYJ 222 V (2.2 k) | T | 34.3/162.8 |
| R689 | 7030003360 | S.RES ERJ3GEYJ 221 V (220) | T | 33.6/161.5 |
| R690 | 7030009851 | S.RES ERA3YED 271V (270) | T | 46.4/165.3 |
| R691 | 7030003230 | S.RES ERJ3GEYJ 180 V (18) | T | 48.4/164.8 |
| R692 | 7030009851 | S.RES ERA3YED 271V (270) | T | 46.4/166.6 |
| R704 | 7030009841 | S.RES ERA3YHD 330V (33) | T | 30.8/113.7 |
| R705 | 7030003600 | S.RES ERJ3GEYJ 223 V (22 k) | T | 29.5/113.7 |
| R706 | 7030005321 | S.RES ERA3YED 103V (10 k) | T | 28.2/113.7 |
| R707 | 7030009861 | S.RES ERA3YED 471V (470) | T | 30.8/108.1 |
| R708 | 7030003410 | S.RES ERJ3GEYJ 561 V (560) | T | 43.3/118.8 |
| R709 | 7030007860 | S.RES ERJ3GEYJ 8R2V (8.2) | T | 43.3/116 |
| R710 | 7030003410 | S.RES ERJ3GEYJ 561 V (560) | T | 43.8/121.1 |
| R711 | 7030003320 | S.RES ERJ3GEYJ 101 V (100) | T | 37.9/154.5 |
| R1000 | 7030003320 | S.RES ERJ3GEYJ 101 V (100) | B | 177.1/11.2 |
| R1003 | 7030010980 | S.RES ERA3YHD 470V (47) | T | 162/13.4 |
| R1004 | 7030007230 | S.RES ERA3YED 102V (1 k) | B | 166.4/12.9 |
| R1005 | 7030003550 | S.RES ERJ3GEYJ 822 V (8.2 k) | T | 144/26.1 |
| R1006 | 7030007230 | S.RES ERA3YED 102V (1 k) | T | 145.3/26.1 |
| R1007 | 7030004030 | S.RES ERJ3GEYJ 5R6 V (5.6) | B | 153.7/33.6 |
| R1008 | 7030003240 | S.RES ERJ3GEYJ 220 V (22) | T | 144/36.4 |
| R1009 | 7030010980 | S.RES ERA3YHD 470V (47) | T | 182.4/29.3 |
| R1010 | 7030010980 | S.RES ERA3YHD 470V (47) | T | 154.5/33.2 |
| R1013 | 7030007230 | S.RES ERA3YED 102V (1 k) | B | 172.7/40.8 |
| R1014 | 7030007230 | S.RES ERA3YED 102V (1 k) | B | 156.7/40.8 |
| R1015 | 7030003530 | S.RES ERJ3GEYJ 562 V (5.6 k) | B | 172.7/45.4 |
| R1016 | 7030003530 | S.RES ERJ3GEYJ 562 V (5.6 k) | B | 156.7/45.4 |
| R1017 | 7030003530 | S.RES ERJ3GEYJ 562 V (5.6 k) | B | 169.7/12.9 |
| R1020 | 7030003390 | S.RES ERJ3GEYJ 391 V (390) | T | 179.6/18.3 |
| R1021 | 7030003220 | S.RES ERJ3GEYJ 150 V (15) | T | 177/19.4 |
| R1022 | 7030003390 | S.RES ERJ3GEYJ 391 V (390) | T | 180.9/19.4 |
| R1023 | 7030010980 | S.RES ERA3YHD 470V (47) | B | 149.3/33.5 |
| R1024 | 7030003200 | S.RES ERJ3GEYJ 100 V (10) | B | 150.1/31.4 |
| R1025 | 7030003300 | S.RES ERJ3GEYJ 680 V (68) | T | 178.3/19.4 |
| R1026 | 7030003480 | S.RES ERJ3GEYJ 222 V (2.2 k) | B | 171.2/14.2 |
| R1027 | 7030003200 | S.RES ERJ3GEYJ 100 V (10) | B | 176.5/38.3 |
| R1028 | 7030003200 | S.RES ERJ3GEYJ 100 V (10) | B | 160.5/38.3 |
| R1029 | 7030010980 | S.RES ERA3YHD 470V (47) | B | 178.2/46.1 |
| R1030 | 7030010980 | S.RES ERA3YHD 470V (47) | B | 162.2/46.1 |
| R1051 | 7030003800 | S.RES ERJ3GEYJ 105 V (1 M) | T | 178.6/93.1 |
| R1054 | 7030011500 | S.RES ERA3YHD 270V (27) | T | 149.1/83.2 |
| R1055 | 7030000010 | S.RES MCR10EZHJ JPW (000) | T | 162.1/76.6 |
| R1056 | 7030000010 | S.RES MCR10EZHJ JPW (000) | T | 177.5/71.1 |
| R1071 | 7030010980 | S.RES ERA3YHD 470V (47) | B | 165.9/76.4 |
| R1072 | 7030000010 | S.RES MCR10EZHJ JPW (000) | T | 133.9/84.1 |
| R1073 | 7030000010 | S.RES MCR10EZHJ JPW (000) | T | 135.5/85.7 |
| R1101 | 7310004860 | S.TRI EVM-3YSX50 B53 (502) | T | 180.1/90.2 |
| R1102 | 7030005871 | S.RES ERA3YKD 104V (100 k) | B | 180.2/100.6 |
| R1103 | 7030007680 | S.RES ERJ8ENF 47R0V (47) | T | 181.7/104.7 |
| R1104 | 7030007680 | S.RES ERJ8ENF 47R0V (47) | T | 173.6/107.2 |
| R1105 | 7030003500 | S.RES ERJ3GEYJ 332 V (3.3 k) | T | 176.7/87.7 |
| R1106 | 7030009620 | S.RES ERJ12YJ120U (12) | B | 179.6/117.9 |
| R1107 | 7030010980 | S.RES ERA3YHD 470V (47) | T | 175.6/120.3 |
| R1109 | 7030007180 | S.RES ERJ12YJ150U (15) | B | 176.5/125.7 |
| R1110 | 7030003480 | S.RES ERJ3GEYJ 222 V (2.2 k) | B | 168.5/131.6 |
| R1111 | 7030003480 | S.RES ERJ3GEYJ 222 V (2.2 k) | T | 166.2/130.4 |
| R1113 | 7030003480 | S.RES ERJ3GEYJ 222 V (2.2 k) | T | 166.2/131.7 |
| R1114 | 7030004040 | S.RES ERJ3GEYJ 4R7 V (4.7) | T | 179.2/125.3 |
| R1115 | 7030006240 | S.RES ERJ12YJ181U (180) | B | 176.5/129.9 |
| R1116 | 7030007230 | S.RES ERA3YED 102V (1 k) | T | 175.7/135.3 |
| R1117 | 7030004040 | S.RES ERJ3GEYJ 4R7 V (4.7) | T | 175.7/134 |
| R1118 | 7030003480 | S.RES ERJ3GEYJ 222 V (2.2 k) | T | 175.4/132 |
| R1119 | 7030003470 | S.RES ERJ3GEYJ 182 V (1.8 k) | T | 178/132 |
| R1120 | 7030006070 | S.RES ERJ12YJ101U (100) | B | 177.3/141 |
| R1121 | 7030003240 | S.RES ERJ3GEYJ 220 V (22) | T | 178.6/139.6 |
| R1122 | 7030010980 | S.RES ERA3YHD 470V (47) | T | 171.9/131.1 |
| R1123 | 7030003480 | S.RES ERJ3GEYJ 222 V (2.2 k) | T | 165.7/137.4 |
| R1124 | 7030003460 | S.RES ERJ3GEYJ 152 V (1.5 k) | T | 165.7/140 |
| R1125 | 7030003420 | S.RES ERJ3GEYJ 681 V (680) | B | 171/142.2 |
| R1126 | 7030003200 | S.RES ERJ3GEYJ 100 V (10) | T | 168.4/142.2 |
| R1127 | 7030010980 | S.RES ERA3YHD 470V (47) | T | 174.6/142.9 |
| R1128 | 7030003470 | S.RES ERJ3GEYJ 182 V (1.8 k) | T | 174.6/146.6 |
| R1129 | 7030003470 | S.RES ERJ3GEYJ 182 V (1.8 k) | T | 174.6/148.4 |
| R1130 | 7030003480 | S.RES ERJ3GEYJ 222 V (2.2 k) | T | 180.6/146.4 |
| R1131 | 7030003640 | S.RES ERJ3GEYJ 473 V (47 k) | B | 177.4/90.7 |
| R1132 | 7310004860 | S.TRI EVM-3YSX50 B53 (502) | T | 179.4/84.3 |
| R1133 | 7030003500 | S.RES ERJ3GEYJ 332 V (3.3 k) | T | 175.5/82.5 |
| R1134 | 7030003640 | S.RES ERJ3GEYJ 473 V (47 k) | T | 175.5/83.8 |
| R1135 | 7030005871 | S.RES ERA3YKD 104V (100 k) | T | 182.2/97.8 |

M.=Mounted side (T: Mounted on the Top side, B: Mounted on the Bottom side)
S.=Surface mount

## [RXPLL-A UNIT]

| REF NO. | ORDER NO. | DESCRIPTION | M. | H/V LOCATION |
|---|---|---|---|---|
| R1151 | 7030003280 | S.RES ERJ3GEYJ 470 V (47) | T | 134.8/63.9 |
| R1152 | 7030003280 | S.RES ERJ3GEYJ 470 V (47) | B | 117.2/56.3 |
| R1203 | 7030000010 | S.RES MCR10EZHJ JPW (000) | T | 157.5/74.9 |
| R1211 | 7030003860 | S.RES ERJ3GE JPW V | T | 117.6/7.8 |
| R1212 | 7030003860 | S.RES ERJ3GE JPW V | T | 124.8/51.1 |
| R1213 | 7030003200 | S.RES ERJ3GEYJ 100 V (10) | B | 118.8/25 |
| R1214 | 7030003200 | S.RES ERJ3GEYJ 100 V (10) | B | 109/25 |
| R1216 | 7030010980 | S.RES ERA3YHD 470V (47) | B | 120.7/31.6 |
| R1217 | 7030010980 | S.RES ERA3YHD 470V (47) | B | 111.2/31.6 |
| R1220 | 7030010980 | S.RES ERA3YHD 470V (47) | T | 118.7/17.3 |
| R1221 | 7030007230 | S.RES ERA3YED 102V (1 k) | T | 116.4/39.9 |
| R1222 | 7030003530 | S.RES ERJ3GEYJ 562 V (5.6 k) | T | 116.4/38.6 |
| R1223 | 7030010980 | S.RES ERA3YHD 470V (47) | T | 109.3/17.1 |
| R1224 | 7030007230 | S.RES ERA3YED 102V (1 k) | T | 106.6/39.9 |
| R1225 | 7030003530 | S.RES ERJ3GEYJ 562 V (5.6 k) | T | 106.6/38.6 |
| R1226 | 7030003410 | S.RES ERJ3GEYJ 561 V (560) | T | 158.9/92.9 |
| R1227 | 7030003410 | S.RES ERJ3GEYJ 561 V (560) | T | 154/92.9 |
| R1228 | 7310004860 | S.TRI EVM-3YSX50 B53 (502) | T | 156.4/92.9 |
| R1229 | 7030003480 | S.RES ERJ3GEYJ 222 V (2.2 k) | B | 156.1/117.4 |
| R1230 | 7030003480 | S.RES ERJ3GEYJ 222 V (2.2 k) | B | 156.1/119.2 |
| R1231 | 7030003480 | S.RES ERJ3GEYJ 222 V (2.2 k) | B | 156.1/121 |
| R1232 | 7030003600 | S.RES ERJ3GEYJ 223 V (22 k) | T | 156.3/97.5 |
| R1233 | 7030010980 | S.RES ERA3YHD 470V (47) | B | 152.5/109.4 |
| R1301 | 7030010980 | S.RES ERA3YHD 470V (47) | B | 155.7/97.5 |
| R1302 | 7030003860 | S.RES ERJ3GE JPW V | T | 159.3/116.8 |
| R1304 | 7030003620 | S.RES ERJ3GEYJ 333 V (33 k) | T | 156.5/123.2 |
| R1306 | 7030006230 | S.RES ERJ12YJ151U (150) | B | 153.8/124.8 |
| R1307 | 7030003300 | S.RES ERJ3GEYJ 680 V (68) | T | 156.5/128.4 |
| R1311 | 7030000010 | S.RES MCR10EZHJ JPW (000) | T | 140.3/98.8 |
| R1312 | 7030000010 | S.RES MCR10EZHJ JPW (000) | T | 143.2/104.1 |
| R1313 | 7030000010 | S.RES MCR10EZHJ JPW (000) | T | 143.2/101.5 |
| R1357 | 7030007230 | S.RES ERA3YED 102V (1 k) | B | 140.7/70.4 |
| R1358 | 7030003530 | S.RES ERJ3GEYJ 562 V (5.6 k) | B | 142.8/70.4 |
| R1359 | 7030010980 | S.RES ERA3YHD 470V (47) | T | 139.4/64.7 |
| R1360 | 7030007230 | S.RES ERA3YED 102V (1 k) | B | 146.4/67.1 |
| R1361 | 7030003380 | S.RES ERJ3GEYJ 331 V (330) | T | 139.3/68.8 |
| R1362 | 7030005871 | S.RES ERA3YKD 104V (100 k) | B | 144.6/70.4 |
| R1401 | 7030003200 | S.RES ERJ3GEYJ 100 V (10) | T | 131.5/103.3 |
| R1402 | 7030003300 | S.RES ERJ3GEYJ 680 V (68) | T | 126.4/111 |
| R1403 | 7030007230 | S.RES ERA3YED 102V (1 k) | T | 132/107.7 |
| R1404 | 7030009861 | S.RES ERA3YED 471V (470) | T | 134.6/104.3 |
| R1405 | 7030003340 | S.RES ERJ3GEYJ 151 V (150) | T | 137.2/104.3 |
| R1406 | 7030009591 | S.RES ERA3YED 472V (4.7 k) | T | 135.2/106.2 |
| R1407 | 7030003550 | S.RES ERJ3GEYJ 822 V (8.2 k) | B | 135.4/104.3 |
| R1408 | 7030003200 | S.RES ERJ3GEYJ 100 V (10) | T | 120.9/109 |
| R1409 | 7030009591 | S.RES ERA3YED 472V (4.7 k) | T | 120.5/114.9 |
| R1410 | 7030006091 | S.RES ERA3YED 822V (8.2 k) | B | 124.2/114.4 |
| R1411 | 7030005871 | S.RES ERA3YKD 104V (100 k) | T | 123.2/116.2 |
| R1412 | 7030003200 | S.RES ERJ3GEYJ 100 V (10) | T | 126.4/112.3 |
| R1413 | 7030003200 | S.RES ERJ3GEYJ 100 V (10) | T | 126.4/113.6 |
| R1414 | 7030005871 | S.RES ERA3YKD 104V (100 k) | B | 120.9/114.4 |
| R1415 | 7030010980 | S.RES ERA3YHD 470V (47) | T | 127/114.9 |
| R1416 | 7030003320 | S.RES ERJ3GEYJ 101 V (100) | B | 139.7/122.9 |
| R1417 | 7030000010 | S.RES MCR10EZHJ JPW (000) | B | 130.1/124.5 |
| R1418 | 7030000010 | S.RES MCR10EZHJ JPW (000) | B | 130.1/122.5 |
| R1419 | 7030003860 | S.RES ERJ3GE JPW V | B | 129.4/114.9 |
| R1501 | 7030010980 | S.RES ERA3YHD 470V (47) | T | 126.5/125.2 |
| R1502 | 7030009841 | S.RES ERA3YHD 330V (33) | T | 133/131 |
| R1503 | 7030009851 | S.RES ERA3YED 271V (270) | T | 130/146.3 |
| R1504 | 7030011050 | S.RES ERA3YHD 100V (10) | T | 131.3/143.5 |
| R1505 | 7030006091 | S.RES ERA3YED 822V (8.2 k) | B | 137.7/140.3 |
| R1506 | 7030007230 | S.RES ERA3YED 102V (1 k) | B | 137.7/147 |
| R1507 | 7030007230 | S.RES ERA3YED 102V (1 k) | T | 132.6/146.3 |
| R1508 | 7030007230 | S.RES ERA3YED 102V (1 k) | T | 133.9/146.3 |
| R1509 | 7030007230 | S.RES ERA3YED 102V (1 k) | T | 139.1/158.9 |
| R1510 | 7030005321 | S.RES ERA3YED 103V (10 k) | T | 139.1/157.6 |
| R1511 | 7030009861 | S.RES ERA3YED 471V (470) | T | 136.5/157.6 |
| R1512 | 7030003380 | S.RES ERJ3GEYJ 331 V (330) | T | 129.6/151.6 |
| R1513 | 7030003380 | S.RES ERJ3GEYJ 331 V (330) | T | 129.6/155.5 |
| R1514 | 7030005321 | S.RES ERA3YED 103V (10 k) | T | 129.6/160.8 |
| R1515 | 7030005321 | S.RES ERA3YED 103V (10 k) | T | 133.5/160.8 |
| R1516 | 7310005610 | S.TRI TMC3ADC13X 1K | T | 119.2/157.7 |
| R1517 | 7030005321 | S.RES ERA3YED 103V (10 k) | T | 115.3/158 |
| R1518 | 7030005321 | S.RES ERA3YED 103V (10 k) | T | 134.8/160.8 |
| R1519 | 7030005321 | S.RES ERA3YED 103V (10 k) | T | 131.7/171.7 |
| R1520 | 7030005321 | S.RES ERA3YED 103V (10 k) | T | 136.1/160.8 |
| R1521 | 7030010980 | S.RES ERA3YHD 470V (47) | T | 126.5/133 |
| R1522 | 7030009841 | S.RES ERA3YHD 330V (33) | T | 126/141.1 |
| R1523 | 7030009851 | S.RES ERA3YED 271V (270) | T | 123.7/146.3 |
| R1524 | 7030011050 | S.RES ERA3YHD 100V (10) | T | 122.4/143.5 |
| R1525 | 7030007230 | S.RES ERA3YED 102V (1 k) | B | 128.8/147 |
| R1526 | 7030003460 | S.RES ERJ3GEYJ 152 V (1.5 k) | B | 137.7/142.1 |
| R1527 | 7030007230 | S.RES ERA3YED 102V (1 k) | T | 119.8/146.3 |
| R1528 | 7030007230 | S.RES ERA3YED 102V (1 k) | T | 121.1/146.3 |
| R1529 | 7030007230 | S.RES ERA3YED 102V (1 k) | T | 115.3/152.3 |
| R1530 | 7030003380 | S.RES ERJ3GEYJ 331 V (330) | T | 128/151.6 |
| R1531 | 7030003380 | S.RES ERJ3GEYJ 331 V (330) | T | 128/155.5 |
| R1532 | 7030005321 | S.RES ERA3YED 103V (10 k) | T | 124.1/160.8 |
| R1533 | 7030005321 | S.RES ERA3YED 103V (10 k) | T | 128/160.8 |
| R1534 | 7030005321 | S.RES ERA3YED 103V (10 k) | T | 122.8/160.8 |
| R1535 | 7030005321 | S.RES ERA3YED 103V (10 k) | T | 121.5/160.8 |
| R1536 | 7030005321 | S.RES ERA3YED 103V (10 k) | T | 129/171.7 |
| R1537 | 7030003320 | S.RES ERJ3GEYJ 101 V (100) | T | 115.5/164.5 |
| R1538 | 7030003320 | S.RES ERJ3GEYJ 101 V (100) | T | 107.1/170.1 |
| R1539 | 7030008061 | S.RES ERA3YED 222V (2.2 k) | B | 131.8/176.4 |
| R1540 | 7030010390 | S.RES ERA3YED 821V (820) | B | 128.7/177.1 |
| R1541 | 7030003320 | S.RES ERJ3GEYJ 101 V (100) | T | 107.1/178.8 |
| R1542 | 7030003320 | S.RES ERJ3GEYJ 101 V (100) | T | 115.5/173.2 |
| R1543 | 7030009691 | S.RES ERA3YED 101V (100) | B | 130.6/179 |
| R1651 | 7030003380 | S.RES ERJ3GEYJ 331 V (330) | B | 100.9/144.8 |
| R1652 | 7030003220 | S.RES ERJ3GEYJ 150 V (15) | B | 102.7/144.8 |
| R1653 | 7030003380 | S.RES ERJ3GEYJ 331 V (330) | B | 101.9/142.9 |
| R1654 | 7030010980 | S.RES ERA3YHD 470V (47) | B | 105.5/142.2 |
| R1655 | 7030009861 | S.RES ERA3YED 471V (470) | B | 108.8/140 |

## [RXPLL-A UNIT]

| REF NO. | ORDER NO. | DESCRIPTION | M. | H/V LOCATION |
|---|---|---|---|---|
| R1656 | 7030003630 | S.RES ERJ3GEYJ 393 V (39 k) | B | 108.3/142.2 |
| R1657 | 7030005871 | S.RES ERA3YKD 104V (100 k) | T | 108/133.1 |
| R1658 | 7030003320 | S.RES ERJ3GEYJ 101 V (100) | T | 110.6/133.1 |
| R1659 | 7030009691 | S.RES ERA3YED 101V (100) | T | 115.8/124.9 |
| R1660 | 7030009691 | S.RES ERA3YED 101V (100) | T | 115.8/128.7 |
| R1661 | 7030005321 | S.RES ERA3YED 103V (10 k) | T | 135.1/175.4 |
| R1662 | 7030005321 | S.RES ERA3YED 103V (10 k) | T | 135.2/172.8 |
| R1663 | 7030005321 | S.RES ERA3YED 103V (10 k) | T | 144.3/175.4 |
| R1664 | 7030005321 | S.RES ERA3YED 103V (10 k) | T | 139.9/172.1 |
| R1665 | 7030003320 | S.RES ERJ3GEYJ 101 V (100) | T | 109.3/133.1 |
| R1667 | 7030003360 | S.RES ERJ3GEYJ 221 V (220) | T | 139.2/170.2 |
| R1668 | 7030003360 | S.RES ERJ3GEYJ 221 V (220) | T | 141.8/170.2 |
| R1670 | 7030003800 | S.RES ERJ3GEYJ 105 V (1 M) | T | 140.2/164.1 |
| R1673 | 7030007230 | S.RES ERA3YED 102V (1 k) | B | 146/174.5 |
| R1674 | 7030009851 | S.RES ERA3YED 271V (270) | B | 145.1/177.1 |
| R1675 | 7030009591 | S.RES ERA3YED 472V (4.7 k) | T | 136.6/170.2 |
| R1677 | 7030009591 | S.RES ERA3YED 472V (4.7 k) | T | 143.1/170.2 |
| R1701 | 7030003360 | S.RES ERJ3GEYJ 221 V (220) | T | 162.4/147.4 |
| R1703 | 7030003360 | S.RES ERJ3GEYJ 221 V (220) | T | 159.8/147.4 |
| R1704 | 7030003360 | S.RES ERJ3GEYJ 221 V (220) | T | 158.5/147.4 |
| R1706 | 7030003360 | S.RES ERJ3GEYJ 221 V (220) | T | 155.9/147.4 |
| R1707 | 7030003360 | S.RES ERJ3GEYJ 221 V (220) | T | 154.6/147.4 |
| R1708 | 7030003360 | S.RES ERJ3GEYJ 221 V (220) | T | 153.3/147.4 |
| R1709 | 7030003480 | S.RES ERJ3GEYJ 222 V (2.2 k) | T | 149.7/159.3 |
| R1710 | 7030003480 | S.RES ERJ3GEYJ 222 V (2.2 k) | T | 148.4/159.3 |
| R1711 | 7030003540 | S.RES ERJ3GEYJ 682 V (6.8 k) | T | 147.1/159.3 |
| R1712 | 7030003540 | S.RES ERJ3GEYJ 682 V (6.8 k) | T | 145.8/159.3 |
| R1713 | 7030003660 | S.RES ERJ3GEYJ 683 V (68 k) | T | 145.8/157.2 |
| R1714 | 7030003660 | S.RES ERJ3GEYJ 683 V (68 k) | T | 145.8/155.9 |
| R1715 | 7030003540 | S.RES ERJ3GEYJ 682 V (6.8 k) | T | 143.9/164.8 |
| R1716 | 7030007230 | S.RES ERA3YED 102V (1 k) | T | 164.2/164.8 |
| R1717 | 7030007230 | S.RES ERA3YED 102V (1 k) | T | 164.2/163.5 |
| R1718 | 7030007230 | S.RES ERA3YED 102V (1 k) | T | 164.2/162.2 |
| R1719 | 7030003660 | S.RES ERJ3GEYJ 683 V (68 k) | T | 144.3/166.8 |
| | | | | |
| C1 | 4030011600 | S.CER C1608 JB 1E 104K-T | T | 10.8/18.2 |
| C2 | 4030006880 | S.CER C1608 JB 1H 472K-T | T | 25.7/29.5 |
| C14 | 4030006880 | S.CER C1608 JB 1H 472K-T | T | 37.7/12.5 |
| C15 | 4030006880 | S.CER C1608 JB 1H 472K-T | T | 31.2/15.4 |
| C16 | 4030006880 | S.CER C1608 JB 1H 472K-T | T | 35.1/15.4 |
| C17 | 4030006880 | S.CER C1608 JB 1H 472K-T | T | 13.8/12.6 |
| C18 | 4030006880 | S.CER C1608 JB 1H 472K-T | T | 16.8/12.6 |
| C19 | 4030006880 | S.CER C1608 JB 1H 472K-T | T | 29.5/12.6 |
| C20 | 4030006880 | S.CER C1608 JB 1H 472K-T | T | 87.4/127.8 |
| C21 | 4030006880 | S.CER C1608 JB 1H 472K-T | T | 88.7/127.8 |
| C22 | 4030006880 | S.CER C1608 JB 1H 472K-T | T | 90/127.8 |
| C30 | 4030011600 | S.CER C1608 JB 1E 104K-T | T | 19.1/112.4 |
| C31 | 4030011600 | S.CER C1608 JB 1E 104K-T | T | 20.4/113.7 |
| C32 | 4030011600 | S.CER C1608 JB 1E 104K-T | T | 24.3/111.1 |
| C51 | 4510008520 | S.ELE EEE1CA470SP | T | 84/20.3 |
| C52 | 4030011600 | S.CER C1608 JB 1E 104K-T | T | 78.9/23.7 |
| C53 | 4030011600 | S.CER C1608 JB 1E 104K-T | T | 75.1/23.7 |
| C54 | 4510008500 | S.ELE EEE1CA101WP | T | 70/20.3 |
| C61 | 4510008520 | S.ELE EEE1CA470SP | T | 62.9/20.3 |
| C62 | 4030011600 | S.CER C1608 JB 1E 104K-T | B | 58.2/19.9 |
| C63 | 4030011600 | S.CER C1608 JB 1E 104K-T | B | 54.8/19.9 |
| C64 | 4510008500 | S.ELE EEE1CA101WP | T | 50.1/20.3 |
| C101 | 4030006880 | S.CER C1608 JB 1H 472K-T | T | 39.7/80.7 |
| C102 | 4030011600 | S.CER C1608 JB 1E 104K-T | T | 41.8/79.9 |
| C103 | 4510008540 | S.ELE EEE1CA100SR | T | 40.2/76.8 |
| C104 | 4030011600 | S.CER C1608 JB 1E 104K-T | T | 21.4/100.2 |
| C105 | 4030011600 | S.CER C1608 JB 1E 104K-T | T | 21.4/88.2 |
| C106 | 4030011600 | S.CER C1608 JB 1E 104K-T | T | 21.4/84.4 |
| C107 | 4030011600 | S.CER C1608 JB 1E 104K-T | T | 24.4/79.8 |
| C108 | 4030011600 | S.CER C1608 JB 1E 104K-T | T | 27/79.8 |
| C109 | 4030011600 | S.CER C1608 JB 1E 104K-T | T | 30.8/79.8 |
| C110 | 4030011600 | S.CER C1608 JB 1E 104K-T | T | 36.8/79.8 |
| C111 | 4030011600 | S.CER C1608 JB 1E 104K-T | T | 41.2/88.5 |
| C112 | 4030011600 | S.CER C1608 JB 1E 104K-T | T | 41.3/82.6 |
| C114 | 4030011600 | S.CER C1608 JB 1E 104K-T | T | 39.5/98.4 |
| C115 | 4030011600 | S.CER C1608 JB 1E 104K-T | T | 38.1/98.4 |
| C116 | 4030011600 | S.CER C1608 JB 1E 104K-T | T | 35.3/99.6 |
| C117 | 4030011600 | S.CER C1608 JB 1E 104K-T | T | 23.3/98.8 |
| C118 | 4030011600 | S.CER C1608 JB 1E 104K-T | T | 42.6/82.6 |
| C120 | 4030006880 | S.CER C1608 JB 1H 472K-T | T | 36.7/101.5 |
| C121 | 4030011600 | S.CER C1608 JB 1E 104K-T | T | 39.5/101.5 |
| C125 | 4030011600 | S.CER C1608 JB 1E 104K-T | T | 14.6/83.1 |
| C129 | 4030011600 | S.CER C1608 JB 1E 104K-T | T | 33.4/79.8 |
| C130 | 4030017810 | S.CER C1608 CH 1H 102J-T | B | 47.6/106.6 |
| C131 | 4030011600 | S.CER C1608 JB 1E 104K-T | T | 30.4/73.2 |
| C132 | 4030011600 | S.CER C1608 JB 1E 104K-T | T | 35.5/73.2 |
| C133 | 4030006880 | S.CER C1608 JB 1H 472K-T | B | 43.5/98.6 |
| C134 | 4030006880 | S.CER C1608 JB 1H 472K-T | B | 43.5/96.8 |
| C135 | 4030006880 | S.CER C1608 JB 1H 472K-T | T | 46/95.5 |
| C136 | 4030006880 | S.CER C1608 JB 1H 472K-T | T | 46/94.2 |
| C137 | 4030006880 | S.CER C1608 JB 1H 472K-T | T | 46/90.3 |
| C138 | 4030006880 | S.CER C1608 JB 1H 472K-T | T | 46.1/87.7 |
| C139 | 4030006880 | S.CER C1608 JB 1H 472K-T | B | 43.5/100.4 |
| C141 | 4030004740 | S.CER C2012 JB 1H 472K-T | B | 34.3/85.1 |
| C142 | 4550007470 | S.TAN F931A107MNMBMA | B | 19.4/87.4 |
| C150 | 4340000050 | S.MLR ECH-U 1C472JB5 | T | 16.3/64.6 |
| C151 | 4550007520 | S.TAN F931A106MAABMA | B | 38.6/92.1 |
| C152 | 4030007070 | S.CER C1608 CH 1H 330J-T | T | 19.2/59.9 |
| C153 | 4030009910 | S.CER C1608 CH 1H 040B-T | T | 21.3/55.4 |
| C154 | 4610001850 | S.TRI TZB4R200AB10R00 | T | 17.6/55.1 |
| C155 | 4030016550 | S.CER CM105 CH 151G 50AT | T | 24.1/55.4 |
| C156 | 4030016550 | S.CER CM105 CH 151G 50AT | T | 26.9/55.4 |
| C157 | 4030016550 | S.CER CM105 CH 151G 50AT | T | 26.9/56.7 |
| C158 | 4030006880 | S.CER C1608 JB 1H 472K-T | T | 23.3/53.1 |
| C159 | 4030006880 | S.CER C1608 JB 1H 472K-T | B | 23/51.9 |
| C161 | 4510008540 | S.ELE EEE1CA100SR | T | 31.3/61 |
| C162 | 4030009920 | S.CER C1608 CH 1H 050B-T | B | 33.6/53 |
| C163 | 4030011600 | S.CER C1608 JB 1E 104K-T | B | 36.9/59.6 |
| C164 | 4030006880 | S.CER C1608 JB 1H 472K-T | B | 30.3/54.8 |

M.=Mounted side (T: Mounted on the Top side, B: Mounted on the Bottom side)
S.=Surface mount

## [RXPLL-A UNIT]

| REF NO. | ORDER NO. | DESCRIPTION | M. | H/V LOCATION |
|---|---|---|---|---|
| C165 | 4030006880 | S.CER C1608 JB 1H 472K-T | B | 30.8/74 |
| C166 | 4030011600 | S.CER C1608 JB 1E 104K-T | B | 34.9/78.2 |
| C167 | 4030006880 | S.CER C1608 JB 1H 472K-T | B | 37.4/74 |
| C201 | 4030011340 | S.CER C1608 CH 1H 471J-T | T | 33.8/40.4 |
| C202 | 4510009280 | S.ELE EEE1EA4R7SR | T | 26.5/44 |
| C203 | 4030006900 | S.CER C1608 JB 1H 103K-T | T | 32.5/38.3 |
| C204 | 4030006880 | S.CER C1608 JB 1H 472K-T | T | 25.4/35.3 |
| C205 | 4030006880 | S.CER C1608 JB 1H 472K-T | T | 25.4/34 |
| C206 | 4030006880 | S.CER C1608 JB 1H 472K-T | T | 31.1/43 |
| C207 | 4030007030 | S.CER C1608 CH 1H 150J-T | B | 46.8/32.4 |
| C208 | 4030007030 | S.CER C1608 CH 1H 150J-T | T | 32.5/41 |
| C209 | 4030011340 | S.CER C1608 CH 1H 471J-T | T | 44.1/26.1 |
| C210 | 4550007620 | S.TAN F931V224MAABMA | T | 46.2/26.7 |
| C211 | 4550007300 | S.TAN F931A335MAABMA | B | 46.1/41.6 |
| C219 | 4030006880 | S.CER C1608 JB 1H 472K-T | T | 33.8/37.8 |
| C220 | 4030007130 | S.CER C1608 CH 1H 101J-T | T | 54.7/37.6 |
| C221 | 4030009520 | S.CER C1608 CH 1H 020B-T | T | 54.7/32 |
| C222 | 4610001860 | S.TRI TZB4Z060AB10R00 | T | 68.1/32.6 |
| C223 | 4030007080 | S.CER C1608 CH 1H 390J-T | T | 73.2/36.3 |
| C224 | 4030007010 | S.CER C1608 CH 1H 100D-T | T | 73.2/38.9 |
| C225 | 4030007050 | S.CER C1608 CH 1H 220J-T | T | 73.6/30.9 |
| C226 | 4030006880 | S.CER C1608 JB 1H 472K-T | T | 71/30.9 |
| C227 | 4030009920 | S.CER C1608 CH 1H 050B-T | T | 75.1/32.6 |
| C228 | 4510008540 | S.ELE EEE1CA100SR | T | 68.8/37.8 |
| C229 | 4030009530 | S.CER C1608 CH 1H 030B-T | T | 77.8/32.6 |
| C230 | 4030007100 | S.CER C1608 CH 1H 560J-T | T | 54.7/50 |
| C231 | 4030009510 | S.CER C1608 CH 1H 010B-T | T | 54.7/44.6 |
| C232 | 4610001860 | S.TRI TZB4Z060AB10R00 | T | 68.1/45.1 |
| C233 | 4030007070 | S.CER C1608 CH 1H 330J-T | T | 73.2/48.8 |
| C234 | 4030009920 | S.CER C1608 CH 1H 050B-T | T | 73.2/51.4 |
| C235 | 4030007020 | S.CER C1608 CH 1H 120J-T | T | 73.6/43.3 |
| C236 | 4030006880 | S.CER C1608 JB 1H 472K-T | T | 71/43.3 |
| C237 | 4030009910 | S.CER C1608 CH 1H 040B-T | T | 75.1/45 |
| C238 | 4510008540 | S.ELE EEE1CA100SR | T | 68.8/50.3 |
| C239 | 4030009910 | S.CER C1608 CH 1H 040B-T | T | 77.8/45 |
| C240 | 4030007080 | S.CER C1608 CH 1H 390J-T | T | 54.7/62.5 |
| C241 | 4030009510 | S.CER C1608 CH 1H 010B-T | T | 54.7/57.1 |
| C242 | 4610001860 | S.TRI TZB4Z060AB10R00 | T | 68.1/57.6 |
| C243 | 4030007060 | S.CER C1608 CH 1H 270J-T | T | 73.2/61.3 |
| C244 | 4030009910 | S.CER C1608 CH 1H 040B-T | T | 73.2/63.9 |
| C245 | 4030009920 | S.CER C1608 CH 1H 050B-T | T | 73.6/55.8 |
| C246 | 4030006880 | S.CER C1608 JB 1H 472K-T | T | 71/55.9 |
| C247 | 4030009530 | S.CER C1608 CH 1H 030B-T | T | 75.1/57.5 |
| C248 | 4510008540 | S.ELE EEE1CA100SR | T | 68.8/62.9 |
| C250 | 4030007100 | S.CER C1608 CH 1H 560J-T | T | 54.7/75 |
| C251 | 4030009540 | S.CER C1608 CH 1H 1R5B-T | T | 54.7/69.6 |
| C252 | 4610001810 | S.TRI TZB4Z030AB10R00 | T | 68.1/70.1 |
| C253 | 4030007080 | S.CER C1608 CH 1H 390J-T | T | 73.2/73.8 |
| C254 | 4030009530 | S.CER C1608 CH 1H 030B-T | T | 73.2/76.4 |
| C255 | 4030006990 | S.CER C1608 CH 1H 080D-T | T | 73.6/68.4 |
| C256 | 4030006880 | S.CER C1608 JB 1H 472K-T | T | 71/68.4 |
| C257 | 4030007010 | S.CER C1608 CH 1H 100D-T | T | 75.1/70 |
| C258 | 4510008540 | S.ELE EEE1CA100SR | T | 68.8/75.4 |
| C260 | 4030007110 | S.CER C1608 CH 1H 680J-T | T | 54.7/87.5 |
| C262 | 4610001810 | S.TRI TZB4Z030AB10R00 | T | 68.1/82.6 |
| C263 | 4030007080 | S.CER C1608 CH 1H 390J-T | T | 73.2/86.3 |
| C264 | 4030009530 | S.CER C1608 CH 1H 030B-T | T | 73.2/88.9 |
| C265 | 4030011770 | S.CER C1608 CH 1H 060B-T | T | 73.6/80.9 |
| C266 | 4030006880 | S.CER C1608 JB 1H 472K-T | T | 71/80.9 |
| C267 | 4030007010 | S.CER C1608 CH 1H 100D-T | T | 75.1/82.5 |
| C268 | 4510008540 | S.ELE EEE1CA100SR | T | 68.8/87.9 |
| C272 | 4610001860 | S.TRI TZB4Z060AB10R00 | T | 68.1/95.1 |
| C273 | 4030007050 | S.CER C1608 CH 1H 220J-T | T | 73.2/98.2 |
| C274 | 4030009530 | S.CER C1608 CH 1H 030B-T | T | 73.2/100.8 |
| C275 | 4030009920 | S.CER C1608 CH 1H 050B-T | T | 73.6/92.8 |
| C276 | 4030006880 | S.CER C1608 JB 1H 472K-T | T | 71/92.8 |
| C277 | 4030007010 | S.CER C1608 CH 1H 100D-T | T | 75.1/95 |
| C278 | 4510008540 | S.ELE EEE1CA100SR | T | 68.8/100.4 |
| C283 | 4030017810 | S.CER C1608 CH 1H 102J-T | T | 82.1/36.3 |
| C284 | 4030006880 | S.CER C1608 JB 1H 472K-T | T | 84.5/34.3 |
| C285 | 4030017810 | S.CER C1608 CH 1H 102J-T | T | 82.1/48.8 |
| C286 | 4030006880 | S.CER C1608 JB 1H 472K-T | T | 84.5/46.9 |
| C287 | 4030017810 | S.CER C1608 CH 1H 102J-T | T | 82.1/61.3 |
| C288 | 4030006880 | S.CER C1608 JB 1H 472K-T | T | 83.9/57.5 |
| C289 | 4030017810 | S.CER C1608 CH 1H 102J-T | T | 82.1/73.8 |
| C290 | 4030006880 | S.CER C1608 JB 1H 472K-T | T | 84.3/70.4 |
| C291 | 4030017810 | S.CER C1608 CH 1H 102J-T | T | 82.1/86.3 |
| C292 | 4030006880 | S.CER C1608 JB 1H 472K-T | T | 84.4/84.4 |
| C293 | 4030017810 | S.CER C1608 CH 1H 102J-T | T | 82.1/98.7 |
| C294 | 4030006880 | S.CER C1608 JB 1H 472K-T | T | 83.2/93.9 |
| C297 | 4030009920 | S.CER C1608 CH 1H 050B-T | T | 52.6/59.4 |
| C299 | 4030007050 | S.CER C1608 CH 1H 220J-T | T | 52.6/84.4 |
| C301 | 4030006880 | S.CER C1608 JB 1H 472K-T | T | 89.3/30.6 |
| C302 | 4030006880 | S.CER C1608 JB 1H 472K-T | T | 94.9/28 |
| C303 | 4030006880 | S.CER C1608 JB 1H 472K-T | B | 92.6/39.8 |
| C304 | 4030006880 | S.CER C1608 JB 1H 472K-T | B | 92.6/45.2 |
| C305 | 4030006880 | S.CER C1608 JB 1H 472K-T | B | 89.1/48.8 |
| C306 | 4030006880 | S.CER C1608 JB 1H 472K-T | B | 89.1/50.6 |
| C309 | 4030017810 | S.CER C1608 CH 1H 102J-T | T | 94.9/42.7 |
| C310 | 4030011600 | S.CER C1608 JB 1E 104K-T | T | 92.8/42.1 |
| C311 | 4510008520 | S.ELE EEE1CA470SP | T | 93.4/47.4 |
| C312 | 4030006880 | S.CER C1608 JB 1H 472K-T | B | 89/27.4 |
| C313 | 4030006880 | S.CER C1608 JB 1H 472K-T | B | 93.7/23.1 |
| C331 | 4030007110 | S.CER C1608 CH 1H 680J-T | T | 89.3/32.2 |
| C332 | 4030007160 | S.CER C1608 CH 1H 181J-T | T | 92.1/33.5 |
| C333 | 4030007110 | S.CER C1608 CH 1H 680J-T | T | 89.3/33.5 |
| C334 | 4030007050 | S.CER C1608 CH 1H 220J-T | T | 94.9/36 |
| C335 | 4030006980 | S.CER C1608 CH 1H 070D-T | T | 94.9/37.4 |
| C336 | 4030007030 | S.CER C1608 CH 1H 150J-T | T | 92.1/38.8 |
| C337 | 4030007050 | S.CER C1608 CH 1H 220J-T | T | 94.9/38.8 |
| C341 | 4030006880 | S.CER C1608 JB 1H 472K-T | T | 94.9/40.1 |
| C342 | 4030006880 | S.CER C1608 JB 1H 472K-T | T | 86.5/33.5 |
| C344 | 4030011600 | S.CER C1608 JB 1E 104K-T | T | 94.9/41.4 |
| C351 | 4030017810 | S.CER C1608 CH 1H 102J-T | T | 94.9/61.6 |

## [RXPLL-A UNIT]

| REF NO. | ORDER NO. | DESCRIPTION | M. | H/V LOCATION |
|---|---|---|---|---|
| C352 | 4030011600 | S.CER C1608 JB 1E 104K-T | T | 94.9/62.9 |
| C353 | 4510008520 | S.ELE EEE1CA470SP | T | 93.4/67.1 |
| C354 | 4030006880 | S.CER C1608 JB 1H 472K-T | T | 89.3/51.7 |
| C355 | 4030006880 | S.CER C1608 JB 1H 472K-T | T | 94.9/55.1 |
| C356 | 4030006880 | S.CER C1608 JB 1H 472K-T | T | 89.2/58.4 |
| C357 | 4030006880 | S.CER C1608 JB 1H 472K-T | T | 94.9/57.7 |
| C358 | 4030006880 | S.CER C1608 JB 1H 472K-T | B | 89.2/60.3 |
| C359 | 4030006880 | S.CER C1608 JB 1H 472K-T | B | 92.6/62.1 |
| C360 | 4030006880 | S.CER C1608 JB 1H 472K-T | B | 89.9/66.9 |
| C361 | 4030006880 | S.CER C1608 JB 1H 472K-T | T | 89.3/83.4 |
| C363 | 4030006880 | S.CER C1608 JB 1H 472K-T | T | 86.1/60.9 |
| C364 | 4030017810 | S.CER C1608 CH 1H 102J-T | T | 86.7/52.3 |
| C365 | 4030006880 | S.CER C1608 JB 1H 472K-T | T | 90.3/59.9 |
| C421 | 4030006880 | S.CER C1608 JB 1H 472K-T | T | 94.1/88.5 |
| C423 | 4030006880 | S.CER C1608 JB 1H 472K-T | T | 94.1/93.3 |
| C426 | 4030006880 | S.CER C1608 JB 1H 472K-T | B | 94.6/87.3 |
| C427 | 4030006880 | S.CER C1608 JB 1H 472K-T | T | 92.1/86.5 |
| C441 | 4030007040 | S.CER C1608 CH 1H 180J-T | T | 94.9/71.3 |
| C442 | 4030007040 | S.CER C1608 CH 1H 180J-T | T | 94.9/72.6 |
| C443 | 4030007020 | S.CER C1608 CH 1H 120J-T | T | 92.1/74.2 |
| C444 | 4030007080 | S.CER C1608 CH 1H 390J-T | T | 94.9/73.9 |
| C445 | 4030011770 | S.CER C1608 CH 1H 060B-T | T | 94.9/75.2 |
| C446 | 4030007060 | S.CER C1608 CH 1H 270J-T | T | 94.9/79.1 |
| C447 | 4030007110 | S.CER C1608 CH 1H 680J-T | T | 92.8/78.9 |
| C448 | 4030006880 | S.CER C1608 JB 1H 472K-T | T | 94.9/76.5 |
| C449 | 4030006880 | S.CER C1608 JB 1H 472K-T | T | 88.1/69.1 |
| C451 | 4030007110 | S.CER C1608 CH 1H 680J-T | T | 92/82.1 |
| C452 | 4030007160 | S.CER C1608 CH 1H 181J-T | T | 92/80.8 |
| C453 | 4030011600 | S.CER C1608 JB 1E 104K-T | T | 94.9/77.8 |
| C501 | 4030006880 | S.CER C1608 JB 1H 472K-T | T | 38.9/131.2 |
| C502 | 4030011600 | S.CER C1608 JB 1E 104K-T | T | 38.9/129.9 |
| C503 | 4510008540 | S.ELE EEE1CA100SR | T | 36.6/126.7 |
| C504 | 4030011600 | S.CER C1608 JB 1E 104K-T | T | 21.4/153.1 |
| C505 | 4550007470 | S.TAN F931A107MNMBMA | B | 19.2/140.3 |
| C506 | 4030011600 | S.CER C1608 JB 1E 104K-T | T | 21.4/141 |
| C507 | 4030011600 | S.CER C1608 JB 1E 104K-T | T | 21.4/137.1 |
| C509 | 4030011600 | S.CER C1608 JB 1E 104K-T | T | 25.8/132.6 |
| C510 | 4030011600 | S.CER C1608 JB 1E 104K-T | T | 28.4/132.6 |
| C511 | 4030011600 | S.CER C1608 JB 1E 104K-T | T | 32.2/132.6 |
| C512 | 4030011600 | S.CER C1608 JB 1E 104K-T | T | 34.8/132.6 |
| C513 | 4030011600 | S.CER C1608 JB 1E 104K-T | T | 37.4/132.6 |
| C514 | 4030011600 | S.CER C1608 JB 1E 104K-T | T | 41.2/136 |
| C515 | 4030011600 | S.CER C1608 JB 1E 104K-T | T | 41.3/139.7 |
| C516 | 4030011600 | S.CER C1608 JB 1E 104K-T | T | 41.3/142.3 |
| C517 | 4030011600 | S.CER C1608 JB 1E 104K-T | T | 37.6/151.8 |
| C518 | 4030011600 | S.CER C1608 JB 1E 104K-T | T | 34.8/151.8 |
| C519 | 4030011600 | S.CER C1608 JB 1E 104K-T | T | 31.2/151.8 |
| C520 | 4030011600 | S.CER C1608 JB 1E 104K-T | T | 23.3/151.9 |
| C521 | 4030011600 | S.CER C1608 JB 1E 104K-T | T | 41.6/134 |
| C522 | 4550007220 | S.TAN F931A476MCMBMA | B | 40.7/145 |
| C525 | 4030006880 | S.CER C1608 JB 1H 472K-T | T | 35.3/154.5 |
| C526 | 4030011600 | S.CER C1608 JB 1E 104K-T | T | 36.6/154.5 |
| C531 | 4030006880 | S.CER C1608 JB 1H 472K-T | T | 14.6/137.5 |
| C532 | 4030007070 | S.CER C1608 CH 1H 330J-T | T | 17.2/137.5 |
| C533 | 4030007110 | S.CER C1608 CH 1H 680J-T | T | 17.3/133.4 |
| C534 | 4030007110 | S.CER C1608 CH 1H 680J-T | T | 16.8/130.1 |
| C535 | 4030007070 | S.CER C1608 CH 1H 330J-T | T | 18.1/127 |
| C536 | 4030006880 | S.CER C1608 JB 1H 472K-T | T | 20.9/127.6 |
| C537 | 4030006880 | S.CER C1608 JB 1H 472K-T | T | 27.2/126.4 |
| C540 | 4030006880 | S.CER C1608 JB 1H 472K-T | B | 56.3/142.8 |
| C541 | 4510008540 | S.ELE EEE1CA100SR | T | 51/139.3 |
| C542 | 4340000260 | S.MLR ECPU1C104MA5 | B | 47.8/128.7 |
| C543 | 4030007060 | S.CER C1608 CH 1H 270J-T | T | 62.2/136.4 |
| C545 | 4030007060 | S.CER 27P C1608 CH | T | 70/137.1 |
| C546 | 4610001830 | S.TRI TZB4S100AB10R00 | T | 65.8/138.7 |
| C547 | 4030007130 | S.CER C1608 CH 1H 101J-T | T | 71.3/137.1 |
| C548 | 4030007010 | S.CER C1608 CH 1H 100D-T | T | 71.3/139.9 |
| C549 | 4030007050 | S.CER C1608 CH 1H 220J-T | T | 68.9/145.1 |
| C550 | 4030006880 | S.CER C1608 JB 1H 472K-T | T | 66.3/143 |
| C551 | 4030009520 | S.CER C1608 CH 1H 020B-T | T | 71.3/142.8 |
| C552 | 4030017810 | S.CER C1608 CH 1H 102J-T | B | 54.6/139.5 |
| C553 | 4030006880 | S.CER C1608 JB 1H 472K-T | B | 56.3/139.5 |
| C554 | 4510008500 | S.ELE EEE1CA101WP | T | 50.9/146.6 |
| C555 | 4030006880 | S.CER C1608 JB 1H 472K-T | B | 47.7/149.5 |
| C556 | 4550007220 | S.TAN F931A476MCMBMA | B | 76.4/136.1 |
| C558 | 4550007520 | S.TAN F931A106MAABMA | B | 43.4/132.5 |
| C559 | 4550007400 | S.TAN F931A225MAABMA | B | 43.4/129.9 |
| C561 | 4550007520 | S.TAN F931A106MAABMA | T | 70/157.5 |
| C562 | 4030006880 | S.CER C1608 JB 1H 472K-T | T | 68.3/155.5 |
| C563 | 4030017810 | S.CER C1608 CH 1H 102J-T | B | 60.1/158 |
| C564 | 4030006880 | S.CER C1608 JB 1H 472K-T | B | 58.8/158 |
| C565 | 4510008520 | S.ELE EEE1CA470SP | T | 50.9/155.6 |
| C566 | 4030006880 | S.CER C1608 JB 1H 472K-T | T | 64.4/155.5 |
| C571 | 4030006880 | S.CER C1608 JB 1H 472K-T | B | 58.5/161.3 |
| C573 | 4030007040 | S.CER C1608 CH 1H 180J-T | B | 72.5/166.8 |
| C574 | 4030009510 | S.CER C1608 CH 1H 010B-T | T | 72.6/169.1 |
| C575 | 4030007040 | S.CER C1608 CH 1H 180J-T | T | 72.6/171.9 |
| C580 | 4030006880 | S.CER C1608 JB 1H 472K-T | T | 41.9/152.4 |
| C581 | 4030006880 | S.CER C1608 JB 1H 472K-T | T | 41.9/144.2 |
| C591 | 4030006880 | S.CER C1608 JB 1H 472K-T | T | 63.5/171.2 |
| C592 | 4030007060 | S.CER C1608 CH 1H 270J-T | T | 62.8/163.1 |
| C593 | 4510008540 | S.ELE EEE1CA100SR | T | 54.4/170.7 |
| C594 | 4030006880 | S.CER C1608 JB 1H 472K-T | T | 57.4/171.9 |
| C596 | 4030006880 | S.CER C1608 JB 1H 472K-T | B | 63.7/168.1 |
| C597 | 4030007050 | S.CER C1608 CH 1H 220J-T | T | 62.2/171.2 |
| C651 | 4030006880 | S.CER C1608 JB 1H 472K-T | T | 13.5/174 |
| C652 | 4030011600 | S.CER C1608 JB 1E 104K-T | T | 12.9/176.3 |
| C653 | 4510008540 | S.ELE EEE1CA100SR | T | 6.8/172.6 |
| C654 | 4030011600 | S.CER C1608 JB 1E 104K-T | T | 22.8/161.4 |
| C655 | 4030011600 | S.CER C1608 JB 1E 104K-T | T | 25.9/161.4 |
| C656 | 4030011600 | S.CER C1608 JB 1E 104K-T | T | 25.8/177.1 |
| C657 | 4030011600 | S.CER C1608 JB 1E 104K-T | T | 22.7/177.1 |
| C658 | 4030011600 | S.CER C1608 JB 1E 104K-T | T | 13.5/172.7 |
| C659 | 4030011600 | S.CER C1608 JB 1E 104K-T | T | 16.5/163.4 |

M.=Mounted side (T: Mounted on the Top side, B: Mounted on the Bottom side)
S.=Surface mount

## [RXPLL-A UNIT]

| REF NO. | ORDER NO. | DESCRIPTION | M. | H/V LOCATION |
|---|---|---|---|---|
| C660 | 4030006880 | S.CER C1608 JB 1H 472K-T | T | 17.6/161.4 |
| C661 | 4030011600 | S.CER C1608 JB 1E 104K-T | T | 13.5/166.9 |
| C662 | 4550007220 | S.TAN F931A476MCMBMA | B | 30.5/169.4 |
| C680 | 4030006880 | S.CER C1608 JB 1H 472K-T | T | 34.3/177.1 |
| C689 | 4030011600 | S.CER C1608 JB 1E 104K-T | T | 37.4/166.4 |
| C690 | 4030011600 | S.CER C1608 JB 1E 104K-T | T | 37.4/161.3 |
| C691 | 4030011600 | S.CER C1608 JB 1E 104K-T | T | 46.4/164 |
| C692 | 4030006880 | S.CER C1608 JB 1H 472K-T | T | 40.3/162.1 |
| C693 | 4030006880 | S.CER C1608 JB 1H 472K-T | B | 58.4/169.6 |
| C694 | 4030006880 | S.CER C1608 JB 1H 472K-T | B | 58.4/164.2 |
| C703 | 4030017810 | S.CER C1608 CH 1H 102J-T | T | 24.3/116.6 |
| C704 | 4030006880 | S.CER C1608 JB 1H 472K-T | T | 23/116.6 |
| C705 | 4510008500 | S.ELE EEE1CA101WP | T | 29.4/118.7 |
| C707 | 4030011600 | S.CER C1608 JB 1E 104K-T | T | 32.1/113.7 |
| C708 | 4030011600 | S.CER C1608 JB 1E 104K-T | T | 32.1/108.1 |
| C709 | 4030007070 | S.CER C1608 CH 1H 330J-T | T | 38.8/112.9 |
| C710 | 4030006880 | S.CER C1608 JB 1H 472K-T | T | 36.2/112.9 |
| C711 | 4030009540 | S.CER C1608 CH 1H 1R5B-T | B | 39.3/113.6 |
| C712 | 4030007070 | S.CER C1608 CH 1H 330J-T | T | 36.2/114.2 |
| C713 | 4030006880 | S.CER C1608 JB 1H 472K-T | T | 42/118.8 |
| C1000 | 4030007050 | S.CER C1608 CH 1H 220J-T | B | 177.1/13.8 |
| C1002 | 4030006880 | S.CER C1608 JB 1H 472K-T | B | 153.1/16.2 |
| C1003 | 4030012600 | S.CER C2012 JB 1A 105M-T | T | 157.4/8.2 |
| C1004 | 4030011600 | S.CER C1608 JB 1E 104K-T | B | 169.6/8.7 |
| C1005 | 4030011600 | S.CER C1608 JB 1E 104K-T | T | 162.8/17.2 |
| C1006 | 4030010210 | S.CER C3216 JB 1C 105M-T | T | 173.8/18.6 |
| C1007 | 4030006880 | S.CER C1608 JB 1H 472K-T | T | 172.4/23.9 |
| C1008 | 4030006880 | S.CER C1608 JB 1H 472K-T | T | 160/24 |
| C1009 | 4030006880 | S.CER C1608 JB 1H 472K-T | T | 147.6/23.8 |
| C1010 | 4030012600 | S.CER C2012 JB 1A 105M-T | T | 154.5/28.9 |
| C1011 | 4030012600 | S.CER C2012 JB 1A 105M-T | T | 144.2/29.3 |
| C1012 | 4030010210 | S.CER C3216 JB 1C 105M-T | T | 144.8/40.2 |
| C1013 | 4030012600 | S.CER C2012 JB 1A 105M-T | T | 144.2/33.2 |
| C1014 | 4030018810 | S.CER C3216 CH 1H 333J-T | B | 151.6/48.3 |
| C1015 | 4030012600 | S.CER C2012 JB 1A 105M-T | T | 163.6/13.8 |
| C1016 | 4030012600 | S.CER C2012 JB 1A 105M-T | T | 173.6/33.2 |
| C1017 | 4030012600 | S.CER C2012 JB 1A 105M-T | T | 163.3/33.2 |
| C1020 | 4030012600 | S.CER C2012 JB 1A 105M-T | B | 170/38.6 |
| C1021 | 4030012600 | S.CER C2012 JB 1A 105M-T | B | 154/38.6 |
| C1024 | 4030010210 | S.CER C3216 JB 1C 105M-T | B | 170.5/45.5 |
| C1025 | 4030010210 | S.CER C3216 JB 1C 105M-T | B | 154.7/45.5 |
| C1026 | 4030010210 | S.CER C3216 JB 1C 105M-T | T | 171.4/52.7 |
| C1027 | 4030010210 | S.CER C3216 JB 1C 105M-T | T | 165.6/52.7 |
| C1028 | 4030006880 | S.CER C1608 JB 1H 472K-T | B | 156.4/65.4 |
| C1029 | 4030006880 | S.CER C1608 JB 1H 472K-T | T | 168.5/65.4 |
| C1030 | 4030010210 | S.CER C3216 JB 1C 105M-T | T | 164.5/18 |
| C1031 | 4030012600 | S.CER C2012 JB 1A 105M-T | B | 169.2/10.8 |
| C1033 | 4550006470 | S.TAN TEESVB2 1D 106M8R | B | 146.5/47.7 |
| C1034 | 4550006470 | S.TAN TEESVB2 1D 106M8R | B | 174/52.1 |
| C1035 | 4550006470 | S.TAN TEESVB2 1D 106M8R | B | 164.6/15.8 |
| C1036 | 4030007120 | S.CER C1608 CH 1H 820J-T | T | 160.2/12.7 |
| C1037 | 4030007090 | S.CER C1608 CH 1H 470J-T | B | 149.3/49.3 |
| C1038 | 4030017810 | S.CER C1608 CH 1H 102J-T | T | 146.6/26.2 |
| C1039 | 4030017810 | S.CER C1608 CH 1H 102J-T | T | 146.5/41 |
| C1040 | 4030017810 | S.CER C1608 CH 1H 102J-T | T | 145.3/36.4 |
| C1041 | 4030006990 | S.CER C1608 CH 1H 080D-T | B | 153.4/31 |
| C1046 | 4030007010 | S.CER C1608 CH 1H 100D-T | B | 168.4/53.7 |
| C1048 | 4030006880 | S.CER C1608 JB 1H 472K-T | B | 170.6/41.6 |
| C1049 | 4030006880 | S.CER C1608 JB 1H 472K-T | B | 154.6/41.6 |
| C1050 | 4030017810 | S.CER C1608 CH 1H 102J-T | B | 170.5/49.5 |
| C1051 | 4030017810 | S.CER C1608 CH 1H 102J-T | B | 154.7/49.4 |
| C1052 | 4030007060 | S.CER C1608 CH 1H 270J-T | B | 164.1/29.6 |
| C1053 | 4030007110 | S.CER C1608 CH 1H 680J-T | T | 175.2/77.3 |
| C1054 | 4030007010 | S.CER C1608 CH 1H 100D-T | B | 175.7/72.4 |
| C1055 | 4030007140 | S.CER C1608 CH 1H 121J-T | B | 175.7/74.2 |
| C1056 | 4030007050 | S.CER C1608 CH 1H 220J-T | T | 175.2/76 |
| C1057 | 4030007130 | S.CER C1608 CH 1H 101J-T | T | 172.1/77.1 |
| C1058 | 4030009920 | S.CER C1608 CH 1H 050B-T | B | 173.2/12.7 |
| C1060 | 4030017810 | S.CER C1608 CH 1H 102J-T | T | 178.6/94.4 |
| C1061 | 4030007090 | S.CER C1608 CH 1H 470J-T | B | 147.7/91.8 |
| C1062 | 4030007170 | S.CER C1608 CH 1H 221J-T | B | 149.5/91.8 |
| C1064 | 4030007090 | S.CER C1608 CH 1H 470J-T | T | 148.7/80.1 |
| C1066 | 4030007010 | S.CER C1608 CH 1H 100D-T | T | 138.6/81.9 |
| C1067 | 4030007010 | S.CER C1608 CH 1H 100D-T | T | 173.4/77.1 |
| C1070 | 4030006980 | S.CER C1608 CH 1H 070D-T | T | 137.2/81.9 |
| C1071 | 4030007100 | S.CER C1608 CH 1H 560J-T | B | 162.2/75.3 |
| C1072 | 4030007170 | S.CER C1608 CH 1H 221J-T | B | 162/78.7 |
| C1073 | 4030007080 | S.CER C1608 CH 1H 390J-T | B | 164.1/76.4 |
| C1074 | 4030007060 | S.CER C1608 CH 1H 270J-T | T | 148.7/78.6 |
| C1081 | 4030006900 | S.CER C1608 JB 1H 103K-T | B | 156.1/86 |
| C1082 | 4030006900 | S.CER C1608 JB 1H 103K-T | B | 151.3/91.8 |
| C1083 | 4030006900 | S.CER C1608 JB 1H 103K-T | B | 151.2/81.6 |
| C1084 | 4030006880 | S.CER C1608 JB 1H 472K-T | B | 149.4/81.6 |
| C1085 | 4030006880 | S.CER C1608 JB 1H 472K-T | B | 153/81.6 |
| C1091 | 4030006880 | S.CER C1608 JB 1H 472K-T | T | 149.3/149.4 |
| C1092 | 4030006880 | S.CER C1608 JB 1H 472K-T | T | 147/138.5 |
| C1093 | 4030006880 | S.CER C1608 JB 1H 472K-T | T | 161.3/135.8 |
| C1101 | 4030006900 | S.CER C1608 JB 1H 103K-T | T | 177/90.9 |
| C1102 | 4030006900 | S.CER C1608 JB 1H 103K-T | T | 175.4/115.5 |
| C1103 | 4030011600 | S.CER C1608 JB 1E 104K-T | T | 179.6/116.4 |
| C1104 | 4030011600 | S.CER C1608 JB 1E 104K-T | T | 175.4/87.7 |
| C1106 | 4030011600 | S.CER C1608 JB 1E 104K-T | T | 179.3/128.8 |
| C1107 | 4030011600 | S.CER C1608 JB 1E 104K-T | B | 172.3/124.2 |
| C1109 | 4030007090 | S.CER C1608 CH 1H 470J-T | T | 175.7/137.9 |
| C1110 | 4030006900 | S.CER C1608 JB 1H 103K-T | T | 175.7/136.6 |
| C1111 | 4030011600 | S.CER C1608 JB 1E 104K-T | T | 176.7/132 |
| C1112 | 4030006900 | S.CER C1608 JB 1H 103K-T | T | 179.3/132 |
| C1113 | 4030007090 | S.CER C1608 CH 1H 470J-T | T | 178.6/140.9 |
| C1114 | 4030006900 | S.CER C1608 JB 1H 103K-T | B | 178.4/138 |
| C1115 | 4030011600 | S.CER C1608 JB 1E 104K-T | T | 175.7/140 |
| C1116 | 4030006900 | S.CER C1608 JB 1H 103K-T | T | 165.7/138.7 |
| C1117 | 4030007010 | S.CER C1608 CH 1H 100D-T | T | 169.7/142.2 |
| C1118 | 4030011600 | S.CER C1608 JB 1E 104K-T | T | 171/142.2 |
| C1119 | 4030006880 | S.CER C1608 JB 1H 472K-T | T | 171.9/146.6 |

## [RXPLL-A UNIT]

| REF NO. | ORDER NO. | DESCRIPTION | M. | H/V LOCATION |
|---|---|---|---|---|
| C1120 | 4030006880 | S.CER C1608 JB 1H 472K-T | T | 171.9/148.4 |
| C1121 | 4030011600 | S.CER C1608 JB 1E 104K-T | T | 180.6/147.7 |
| C1122 | 4030009530 | S.CER C1608 CH 1H 030B-T | T | 178.2/120.3 |
| C1123 | 4030006900 | S.CER C1608 JB 1H 103K-T | T | 182.1/100.9 |
| C1124 | 4030006900 | S.CER C1608 JB 1H 103K-T | T | 175.3/105.9 |
| C1125 | 4030006900 | S.CER C1608 JB 1H 103K-T | T | 175.5/85.1 |
| C1126 | 4030011600 | S.CER C1608 JB 1E 104K-T | T | 173.4/131.1 |
| C1151 | 4030007110 | S.CER C1608 CH 1H 680J-T | B | 123.1/64 |
| C1152 | 4030007110 | S.CER C1608 CH 1H 680J-T | B | 123.1/57 |
| C1153 | 4030017810 | S.CER C1608 CH 1H 102J-T | T | 131.5/63.9 |
| C1201 | 4030007110 | S.CER C1608 CH 1H 680J-T | B | 120.2/21.8 |
| C1202 | 4030007110 | S.CER C1608 CH 1H 680J-T | B | 118.4/21.8 |
| C1207 | 4030006880 | S.CER C1608 JB 1H 472K-T | B | 123/11.8 |
| C1226 | 4030009500 | S.CER C1608 CH 1H 0R5B-T | B | 124.9/35.6 |
| C1227 | 4030009500 | S.CER C1608 CH 1H 0R5B-T | B | 115.4/35.6 |
| C1228 | 4030009920 | S.CER C1608 CH 1H 050B-T | B | 113.9/41.8 |
| C1231 | 4030006900 | S.CER C1608 JB 1H 103K-T | T | 118.9/21.5 |
| C1232 | 4030006900 | S.CER C1608 JB 1H 103K-T | T | 109/21.5 |
| C1234 | 4030006900 | S.CER C1608 JB 1H 103K-T | B | 123.5/38.3 |
| C1235 | 4030006880 | S.CER C1608 JB 1H 472K-T | B | 116.6/32.1 |
| C1236 | 4030006900 | S.CER C1608 JB 1H 103K-T | T | 119.8/40 |
| C1238 | 4030006900 | S.CER C1608 JB 1H 103K-T | B | 114/38.3 |
| C1239 | 4030006880 | S.CER C1608 JB 1H 472K-T | B | 106.8/32.3 |
| C1240 | 4030006900 | S.CER C1608 JB 1H 103K-T | T | 111.7/40.5 |
| C1241 | 4030006900 | S.CER C1608 JB 1H 103K-T | T | 113.6/38.6 |
| C1243 | 4030006880 | S.CER C1608 JB 1H 472K-T | B | 129.6/46.7 |
| C1244 | 4030007080 | S.CER C1608 CH 1H 390J-T | T | 149.6/67 |
| C1245 | 4030007130 | S.CER C1608 CH 1H 101J-T | T | 151/64.4 |
| C1246 | 4030007120 | S.CER C1608 CH 1H 820J-T | T | 150.9/67 |
| C1247 | 4030007090 | S.CER C1608 CH 1H 470J-T | T | 153.4/63.5 |
| C1248 | 4030007130 | S.CER C1608 CH 1H 101J-T | T | 153.4/66.8 |
| C1249 | 4030007020 | S.CER C1608 CH 1H 120J-T | T | 153.1/70.3 |
| C1250 | 4030007100 | S.CER C1608 CH 1H 560J-T | B | 152.4/74.3 |
| C1251 | 4030006900 | S.CER C1608 JB 1H 103K-T | T | 160.2/92.9 |
| C1252 | 4030006900 | S.CER C1608 JB 1H 103K-T | T | 152.7/92.9 |
| C1253 | 4030006900 | S.CER C1608 JB 1H 103K-T | B | 152.5/111.2 |
| C1255 | 4030017810 | S.CER C1608 CH 1H 102J-T | B | 155.7/99.3 |
| C1256 | 4030007010 | S.CER C1608 CH 1H 100D-T | T | 156.3/98.8 |
| C1257 | 4030011600 | S.CER C1608 JB 1E 104K-T | B | 155.7/103 |
| C1258 | 4030007080 | S.CER C1608 CH 1H 390J-T | B | 152/97.5 |
| C1264 | 4030007110 | S.CER C1608 CH 1H 680J-T | T | 122/51.1 |
| C1265 | 4610001830 | S.TRI TZB4S100AB10R00 | T | 163.8/70.8 |
| C1266 | 4030007020 | S.CER C1608 CH 1H 120J-T | T | 160.1/74.5 |
| C1267 | 4030006880 | S.CER C1608 JB 1H 472K-T | B | 157/126.4 |
| C1268 | 4030006980 | S.CER C1608 CH 1H 070D-T | T | 149.6/64.4 |
| C1302 | 4030007060 | S.CER C1608 CH 1H 270J-T | T | 159.3/111 |
| C1303 | 4030006980 | S.CER C1608 CH 1H 070D-T | T | 159.3/112.9 |
| C1304 | 4030007070 | S.CER C1608 CH 1H 330J-T | T | 159.3/114.2 |
| C1305 | 4030007010 | S.CER C1608 CH 1H 100D-T | T | 153.5/114.6 |
| C1306 | 4030009650 | S.CER C1608 CH 1H 240J-T | T | 159.3/115.5 |
| C1307 | 4030007030 | S.CER C1608 CH 1H 150J-T | T | 153.5/120.2 |
| C1308 | 4030006900 | S.CER C1608 JB 1H 103K-T | T | 155.1/127.1 |
| C1309 | 4030007080 | S.CER C1608 CH 1H 390J-T | T | 156.5/125.8 |
| C1310 | 4030007080 | S.CER C1608 CH 1H 390J-T | T | 159.1/128.4 |
| C1311 | 4030006900 | S.CER C1608 JB 1H 103K-T | B | 149/118.9 |
| C1312 | 4030007060 | S.CER C1608 CH 1H 270J-T | T | 155.5/111.7 |
| C1313 | 4030007060 | S.CER C1608 CH 1H 270J-T | T | 159.1/127.1 |
| C1355 | 4030006880 | S.CER C1608 JB 1H 472K-T | T | 144.7/70 |
| C1357 | 4030007000 | S.CER C1608 CH 1H 090D-T | B | 144.6/67.1 |
| C1358 | 4030011600 | S.CER C1608 JB 1E 104K-T | B | 139.1/70.4 |
| C1360 | 4030011600 | S.CER C1608 JB 1E 104K-T | B | 146.4/70.4 |
| C1361 | 4030007020 | S.CER C1608 CH 1H 120J-T | B | 137.7/69.5 |
| C1362 | 4030011600 | S.CER C1608 JB 1E 104K-T | T | 137.5/65.6 |
| C1403 | 4030017810 | S.CER C1608 CH 1H 102J-T | T | 114.7/70.3 |
| C1404 | 4030017810 | S.CER C1608 CH 1H 102J-T | T | 116.3/104.8 |
| C1405 | 4030006900 | S.CER C1608 JB 1H 103K-T | B | 115.9/63.9 |
| C1406 | 4030017810 | S.CER C1608 CH 1H 102J-T | T | 114.2/66.2 |
| C1407 | 4030017810 | S.CER C1608 CH 1H 102J-T | T | 119.9/70.3 |
| C1408 | 4030006900 | S.CER C1608 JB 1H 103K-T | T | 116.3/73 |
| C1409 | 4030006900 | S.CER C1608 JB 1H 103K-T | T | 114.4/68.1 |
| C1410 | 4030007030 | S.CER C1608 CH 1H 150J-T | T | 116.3/83.3 |
| C1411 | 4030006990 | S.CER C1608 CH 1H 080D-T | T | 112.2/87.8 |
| C1412 | 4030007030 | S.CER C1608 CH 1H 150J-T | T | 116.3/93.7 |
| C1413 | 4030007020 | S.CER C1608 CH 1H 120J-T | T | 107/83.3 |
| C1414 | 4030006990 | S.CER C1608 CH 1H 080D-T | T | 103.6/86.6 |
| C1415 | 4030007020 | S.CER C1608 CH 1H 120J-T | T | 107/93.7 |
| C1416 | 4030006900 | S.CER C1608 JB 1H 103K-T | T | 113.2/103.4 |
| C1417 | 4030006900 | S.CER C1608 JB 1H 103K-T | T | 110.5/107.6 |
| C1418 | 4030017810 | S.CER C1608 CH 1H 102J-T | T | 110.4/105.8 |
| C1419 | 4030017810 | S.CER C1608 CH 1H 102J-T | T | 111/108.9 |
| C1420 | 4030007120 | S.CER C1608 CH 1H 820J-T | B | 113.2/114.2 |
| C1421 | 4030007150 | S.CER C1608 CH 1H 151J-T | B | 115/114.2 |
| C1423 | 4030010750 | S.CER C1608 CH 1H 201J-T | B | 120.3/111.1 |
| C1424 | 4030007010 | S.CER C1608 CH 1H 100D-T | T | 132.8/103.3 |
| C1425 | 4030011600 | S.CER C1608 JB 1E 104K-T | T | 136.5/106.2 |
| C1426 | 4030011600 | S.CER C1608 JB 1E 104K-T | T | 137.8/106.2 |
| C1427 | 4030006900 | S.CER C1608 JB 1H 103K-T | T | 133.9/106.2 |
| C1428 | 4030006980 | S.CER C1608 CH 1H 070D-T | T | 119.5/109 |
| C1429 | 4030006900 | S.CER C1608 JB 1H 103K-T | T | 120.5/113.6 |
| C1430 | 4030007040 | S.CER C1608 CH 1H 180J-T | B | 131.9/115.3 |
| C1431 | 4030017810 | S.CER C1608 CH 1H 102J-T | T | 127/116.2 |
| C1432 | 4030009980 | S.CER C1608 JB 1H 152K-T | T | 129.1/114.1 |
| C1433 | 4030011600 | S.CER C1608 JB 1E 104K-T | T | 130.4/114.1 |
| C1434 | 4030009920 | S.CER C1608 CH 1H 050B-T | B | 124.7/134.4 |
| C1435 | 4030009920 | S.CER C1608 CH 1H 050B-T | B | 124.7/131.6 |
| C1436 | 4030011600 | S.CER C1608 JB 1E 104K-T | B | 137.2/122.2 |
| C1437 | 4030009920 | S.CER C1608 CH 1H 050B-T | T | 104/83.3 |
| C1438 | 4030009920 | S.CER C1608 CH 1H 050B-T | T | 102.3/86.6 |
| C1439 | 4030009920 | S.CER C1608 CH 1H 050B-T | T | 110/93.7 |
| C1441 | 4030006880 | S.CER C1608 JB 1H 472K-T | T | 120.5/116.2 |
| C1451 | 4030007020 | S.CER C1608 CH 1H 120J-T | T | 125.5/80.1 |
| C1453 | 4030007030 | S.CER C1608 CH 1H 150J-T | T | 122.1/85.1 |
| C1454 | 4030007030 | S.CER C1608 CH 1H 150J-T | T | 120.8/85.1 |
| C1456 | 4030007020 | S.CER C1608 CH 1H 120J-T | T | 125.5/90.9 |

M.=Mounted side (T: Mounted on the Top side, B: Mounted on the Bottom side)
S.=Surface mount

## [RXPLL-A UNIT]

| REF NO. | ORDER NO. | DESCRIPTION | | M. | H/V LOCATION |
|---|---|---|---|---|---|
| C1457 | 4030006900 | S.CER | C1608 JB 1H 103K-T | T | 118.3/72.9 |
| C1458 | 4030006900 | S.CER | C1608 JB 1H 103K-T | T | 116.6/103.5 |
| C1501 | 4030018530 | S.CER | C3216 CH 1H 103J-T | T | 131.2/124.5 |
| C1502 | 4550003220 | S.TAN | TEESVA 1E 105M8R | T | 132.1/139.2 |
| C1503 | 4030006900 | S.CER | C1608 JB 1H 103K-T | T | 137/142.1 |
| C1504 | 4030012610 | S.CER | C2012 JB 1C 474K-T | T | 136.7/140.5 |
| C1505 | 4030007010 | S.CER | C1608 CH 1H 100D-T | T | 130/143.5 |
| C1506 | 4030010760 | S.CER | C1608 CH 1H 331J-T | T | 131.3/146.3 |
| C1507 | 4510008540 | S.ELE | EEE1CA100SR | T | 142.6/140.8 |
| C1508 | 4030011600 | S.CER | C1608 JB 1E 104K-T | B | 128.8/148.8 |
| C1509 | 4030018800 | S.CER | C3216 CH 1H 223J-T | T | 135.8/145.1 |
| C1510 | 4030007110 | S.CER | C1608 CH 1H 680J-T | T | 136.5/158.9 |
| C1511 | 4510008540 | S.ELE | EEE1CA100SR | T | 132.7/150.6 |
| C1512 | 4030011600 | S.CER | C1608 JB 1E 104K-T | T | 129.6/149 |
| C1513 | 4030011600 | S.CER | C1608 JB 1E 104K-T | T | 129.6/158.1 |
| C1514 | 4510008540 | S.ELE | EEE1CA100SR | T | 132.7/156.5 |
| C1515 | 4030007160 | S.CER | C1608 CH 1H 181J-T | T | 132.2/160.8 |
| C1516 | 4030009350 | S.CER | C1608 CH 1H 3R5B-T | T | 130.9/160.8 |
| C1517 | 4030007110 | S.CER | C1608 CH 1H 680J-T | T | 115.3/155 |
| C1518 | 4030018530 | S.CER | C3216 CH 1H 103J-T | T | 131.2/132.8 |
| C1519 | 4550003220 | S.TAN | TEESVA 1E 105M8R | T | 122.9/140.9 |
| C1520 | 4030006900 | S.CER | C1608 JB 1H 103K-T | T | 119.8/140.7 |
| C1521 | 4030012610 | S.CER | C2012 JB 1C 474K-T | T | 116.2/142.1 |
| C1522 | 4030007010 | S.CER | C1608 CH 1H 100D-T | T | 123.7/143.5 |
| C1523 | 4030010760 | S.CER | C1608 CH 1H 331J-T | T | 122.4/146.3 |
| C1524 | 4030018800 | S.CER | C3216 CH 1H 223J-T | T | 117.9/145.2 |
| C1525 | 4510008540 | S.ELE | EEE1CA100SR | T | 124.9/150.6 |
| C1526 | 4030011600 | S.CER | C1608 JB 1E 104K-T | T | 128/149 |
| C1527 | 4030011600 | S.CER | C1608 JB 1E 104K-T | T | 128/158.1 |
| C1528 | 4510008540 | S.ELE | EEE1CA100SR | T | 124.9/156.5 |
| C1529 | 4030017870 | S.CER | C1608 CH 1H 681J-T | T | 125.4/160.8 |
| C1530 | 4030011330 | S.CER | C1608 CH 1H 391J-T | T | 126.7/160.8 |
| C1531 | 4510008500 | S.ELE | EEE1CA101WP | T | 111.3/167.3 |
| C1532 | 4030011600 | S.CER | C1608 JB 1E 104K-T | T | 107.1/167.3 |
| C1533 | 4030011600 | S.CER | C1608 JB 1E 104K-T | T | 115.5/167.3 |
| C1534 | 4510008500 | S.ELE | EEE1CA101WP | T | 119.7/167.3 |
| C1535 | 4030011600 | S.CER | C1608 JB 1E 104K-T | T | 133.7/172.6 |
| C1536 | 4030017870 | S.CER | C1608 CH 1H 681J-T | T | 126.2/179.5 |
| C1537 | 4510008500 | S.ELE | EEE1CA101WP | T | 111.3/176 |
| C1538 | 4030011600 | S.CER | C1608 JB 1E 104K-T | T | 107.1/176 |
| C1539 | 4030011600 | S.CER | C1608 JB 1E 104K-T | T | 115.5/176 |
| C1540 | 4510008500 | S.ELE | EEE1CA101WP | T | 119.7/176 |
| C1541 | 4030007050 | S.CER | C1608 CH 1H 220J-T | T | 124/175 |
| C1651 | 4030006880 | S.CER | C1608 JB 1H 472K-T | B | 105.5/144 |
| C1653 | 4030006880 | S.CER | C1608 JB 1H 472K-T | B | 109/137.2 |
| C1654 | 4030017810 | S.CER | C1608 CH 1H 102J-T | B | 106.9/137.2 |
| C1655 | 4030009530 | S.CER | C1608 CH 1H 030B-T | T | 107.6/136.8 |
| C1656 | 4610001970 | S.TRI | TZC3P200A110R00 | T | 110.9/136.2 |
| C1657 | 4030010220 | S.CER | C2012 CH 1H 102J-T | T | 116.4/122.7 |
| C1658 | 4030010220 | S.CER | C2012 CH 1H 102J-T | T | 116.4/130.9 |
| C1659 | 4030011600 | S.CER | C1608 JB 1E 104K-T | T | 107.8/120 |
| C1660 | 4030011600 | S.CER | C1608 JB 1E 104K-T | B | 134/174 |
| C1661 | 4030011600 | S.CER | C1608 JB 1E 104K-T | B | 145.2/171.3 |
| C1662 | 4030011600 | S.CER | C1608 JB 1E 104K-T | T | 144.3/178 |
| C1663 | 4030011600 | S.CER | C1608 JB 1E 104K-T | T | 135.1/170.2 |
| C1665 | 4030006900 | S.CER | C1608 JB 1H 103K-T | T | 138.9/164.1 |
| C1666 | 4030006880 | S.CER | C1608 JB 1H 472K-T | B | 113.3/144 |
| C1701 | 4030011600 | S.CER | C1608 JB 1E 104K-T | T | 153.4/163 |
| C1702 | 4030011600 | S.CER | C1608 JB 1E 104K-T | T | 144.4/163 |
| C1703 | 4510004601 | ELE | 16 ME 1000 HC | | |
| C1704 | 4030011600 | S.CER | C1608 JB 1E 104K-T | B | 180.1/160.2 |
| C1705 | 4030011600 | S.CER | C1608 JB 1E 104K-T | B | 186.4/160.2 |
| C1706 | 4510008520 | S.ELE | EEE1CA470SP | T | 172.7/154.8 |
| C1707 | 4030011600 | S.CER | C1608 JB 1E 104K-T | T | 149.7/154.8 |
| C1708 | 4030006880 | S.CER | C1608 JB 1H 472K-T | T | 175.7/166.8 |
| C1709 | 4030006880 | S.CER | C1608 JB 1H 472K-T | T | 172.6/166.8 |
| C1710 | 4030006880 | S.CER | C1608 JB 1H 472K-T | T | 169.6/166.8 |
| C1711 | 4030011340 | S.CER | C1608 CH 1H 471J-T | T | 171.4/163.5 |
| C1712 | 4030011340 | S.CER | C1608 CH 1H 471J-T | T | 167.5/163.5 |
| C1713 | 4030006880 | S.CER | C1608 JB 1H 472K-T | B | 165.5/168.8 |
| C1714 | 4030006880 | S.CER | C1608 JB 1H 472K-T | B | 153.8/141.8 |
| C1716 | 4030006880 | S.CER | C1608 JB 1H 472K-T | B | 154.7/145.1 |
| C1717 | 4030006880 | S.CER | C1608 JB 1H 472K-T | B | 152.9/145.1 |
| C1719 | 4030006880 | S.CER | C1608 JB 1H 472K-T | B | 151.1/145.1 |
| C1720 | 4030006880 | S.CER | C1608 JB 1H 472K-T | B | 155.6/141.8 |
| C1721 | 4030006880 | S.CER | C1608 JB 1H 472K-T | B | 157.4/141.8 |
| RL1001 | 6330001750 | RLY | FTR-B4CA012Z | | |
| RL1002 | 6330001750 | RLY | FTR-B4CA012Z | | |
| RL1003 | 6330001750 | RLY | FTR-B4CA012Z | | |
| RL1004 | 6330001750 | RLY | FTR-B4CA012Z | | |
| RL1005 | 6330001750 | RLY | FTR-B4CA012Z | | |
| RL1006 | 6330001750 | RLY | FTR-B4CA012Z | | |
| RL1203 | 6330001750 | RLY | FTR-B4CA012Z | | |
| RL1206 | 6330001750 | RLY | FTR-B4CA012Z | | |
| J2 | 6510019991 | S.CNR | 52808-2271 (2291) | T | 25/9 |
| J10 | 6510007020 | CNR | TMP-J01X-V6 | | |
| J351 | 6510007020 | CNR | TMP-J01X-V6 | | |
| J561 | 6510007020 | CNR | TMP-J01X-V6 | | |
| J601 | 6510007020 | CNR | TMP-J01X-V6 | | |
| J681 | 6510007020 | CNR | TMP-J01X-V6 | | |
| J831 | 6510007020 | CNR | TMP-J01X-V6 | | |
| J1002 | 6510007020 | CNR | TMP-J01X-V6 | | |
| J1101 | 6510007020 | CNR | TMP-J01X-V6 | | |
| J1201 | 6510007020 | CNR | TMP-J01X-V6 | | |
| J1301 | 6510007020 | CNR | TMP-J01X-V6 | | |
| J1501 | 6510018961 | S.CNR | B2B-PH-SM4-TB (LF) (SN) | T | 149.6/177.5 |
| J1701 | 6510019981 | S.CNR | 52808-1671 (1690) | T | 168/177.2 |
| W1052 | 9016201006 | WIR | 73/98/025/X98/X98 | | |
| W1401 | 9029495075 | JMP | 73/98/020/X98/X98 | | |
| W1411 | 7120000480 | S.JMP | MJP-0.4-T | T | 125.1/111.6 |

## [RXPLL-B UNIT]

| REF NO. | ORDER NO. | DESCRIPTION | | M. | H/V LOCATION |
|---|---|---|---|---|---|
| IC1 | 1130011530 | S.IC | CD74HC4094M96 | T | 11.9/24.1 |
| IC2 | 1130009691 | S.IC | TC74HCT7007AF (F) | T | 22.8/23.3 |
| IC51 | 1180001251 | S.IC | TA7808F (TE16L,Q) | T | 77/16.7 |
| IC61 | 1180000421 | S.IC | TA78L05F (TE12R,F) | B | 56.5/16 |
| IC101 | 1140007881 | S.IC | TC190G08EFG0046JDZ/SC1246A | T | 31.3/89.7 |
| IC102 | 1130003831 | S.IC | TC7S04F (TE85R,F) | T | 33.1/74.7 |
| IC104 | 1130003831 | S.IC | TC7S04F (TE85R,F) | T | 31.7/101.1 |
| IC201 | 1130009230 | S.IC | LMX2306TMX/NOPB | T | 27.9/38.8 |
| IC501 | 1140007881 | S.IC | TC190G08EFG0046JDZ/SC1246A | T | 31.3/142.5 |
| IC502 | 1130003831 | S.IC | TC7S04F (TE85R,F) | T | 24.8/127.4 |
| IC503 | 1130003831 | S.IC | TC7S04F (TE85R,F) | T | 31.7/154.1 |
| IC651 | 1140004550 | S.IC | M65343FP/SC1287 | T | 22.6/169.2 |
| IC652 | 1130003831 | S.IC | TC7S04F (TE85R,F) | T | 13.7/163.1 |
| IC1051 | 1190002010 | S.IC | SD5400CY <TOMO> | T | 176.9/99.9 |
| IC1081 | 1110006180 | S.IC | UPG2009TB-E3 | B | 151.6/85.1 |
| IC1402 | 1190002110 | S.IC | NJG1519KC1-TE3 | T | 117.3/69.5 |
| IC1403 | 1190002110 | S.IC | NJG1519KC1-TE3 | T | 113.4/106.3 |
| IC1501 | 1110006121 | S.IC | DBM9A41-G-TR | T | 121.2/124.5 |
| IC1502 | 1110006121 | S.IC | DBM9A41-G-TR | T | 121.2/133 |
| IC1503 | 1110006100 | S.IC | NJM5534MD-TE1 | T | 138.4/151.7 |
| IC1504 | 1110006100 | S.IC | NJM5534MD-TE1 | T | 119.2/151.7 |
| IC1505 | 1110006190 | S.IC | NJM074M-TE1 | T | 128.8/166.9 |
| IC1506 | 1110006100 | S.IC | NJM5534MD-TE1 | T | 128.8/175.6 |
| IC1651 | 1130011921 | S.IC | TC74LCX00F (EL,F) | T | 110/126.2 |
| IC1652 | 1110005420 | S.IC | BA15532F-E2 | T | 139.8/175.6 |
| IC1653 | 1110005100 | S.IC | NJM072BM-TE1 | B | 140/172 |
| IC1701 | 1130011530 | S.IC | CD74HC4094M96 | T | 158/166.7 |
| IC1702 | 1130011530 | S.IC | CD74HC4094M96 | T | 148.9/166.7 |
| IC1703 | 1160000131 | S.IC | TD62783AFG (S,EL) | T | 157.3/154.8 |
| IC1704 | 1180000790 | S.IC | AN78L10M (E1) | B | 183.2/159.8 |
| Q1 | 1590001050 | S.TR | DTC114TUA T106 | B | 30.3/22.6 |
| Q30 | 1530002060 | S.TR | 2SC4081 T106 R | T | 22.3/110.9 |
| Q41 | 1590000680 | S.TR | DTC114EUA T106 | T | 12.8/34.2 |
| Q150 | 1560000331 | S.FET | 2SK210-GR (TE85R,F) | T | 26.9/53 |
| Q151 | 1530002280 | S.TR | 2SC4081 T106 S | B | 33.6/57.2 |
| Q152 | 1530002280 | S.TR | 2SC4081 T106 S | B | 30.8/78.2 |
| Q201 | 1590001330 | S.TR | DTA114EUA T106 | T | 29.6/34.1 |
| Q220 | 1560000331 | S.FET | 2SK210-GR (TE85R,F) | T | 72.5/33.9 |
| Q230 | 1560000331 | S.FET | 2SK210-GR (TE85R,F) | T | 72.5/46.4 |
| Q240 | 1560000331 | S.FET | 2SK210-GR (TE85R,F) | T | 72.5/58.9 |
| Q250 | 1560000331 | S.FET | 2SK210-GR (TE85R,F) | T | 72.5/71.4 |
| Q260 | 1560000331 | S.FET | 2SK210-GR (TE85R,F) | T | 72.5/83.9 |
| Q270 | 1560000331 | S.FET | 2SK210-GR (TE85R,F) | T | 72.5/95.8 |
| Q280 | 1590000680 | S.TR | DTC114EUA T106 | T | 82.3/34.4 |
| Q281 | 1590000680 | S.TR | DTC114EUA T106 | T | 82.3/46.9 |
| Q282 | 1590000680 | S.TR | DTC114EUA T106 | T | 82.3/59.4 |
| Q283 | 1590000680 | S.TR | DTC114EUA T106 | T | 82.3/71.9 |
| Q284 | 1590000680 | S.TR | DTC114EUA T106 | T | 82.3/84.4 |
| Q285 | 1590000680 | S.TR | DTC114EUA T106 | T | 82.3/96.4 |
| Q301 | 1530003432 | S.TR | 2SC5226A-4-TL-E | T | 92.1/30.1 |
| Q302 | 1530003432 | S.TR | 2SC5226A-4-TL-E | B | 89.1/42.5 |
| Q303 | 1530003432 | S.TR | 2SC5226A-4-TL-E | B | 91.3/25.1 |
| Q341 | 1590000680 | S.TR | DTC114EUA T106 | T | 86.3/36.7 |
| Q351 | 1580000751 | S.FET | 3SK294 (TE85L,F) | T | 92.1/56.9 |
| Q352 | 1530003432 | S.TR | 2SC5226A-4-TL-E | B | 89.2/64.5 |
| Q363 | 1590000680 | S.TR | DTC114EUA T106 | T | 86.8/54.3 |
| Q364 | 1590001330 | S.TR | DTA114EUA T106 | T | 86.8/57.4 |
| Q441 | 1590000680 | S.TR | DTC114EUA T106 | T | 86.5/73.7 |
| Q502 | 1590000680 | S.TR | DTC114EUA T106 | T | 41.9/128.8 |
| Q540 | 1530002060 | S.TR | 2SC4081 T106 R | B | 58.7/141.2 |
| Q541 | 1560000331 | S.FET | 2SK210-GR (TE85R,F) | T | 68.9/142.8 |
| Q561 | 1530003432 | S.TR | 2SC5226A-4-TL-E | T | 70.6/153.8 |
| Q580 | 1530003432 | S.TR | 2SC5226A-4-TL-E | T | 41.7/147.4 |
| Q591 | 1530003151 | S.TR | 2SC4673D-TD-E | T | 61.7/166.5 |
| Q592 | 1520000561 | S.TR | 2SB1123 T-TD-E | B | 52/165.3 |
| Q593 | 1590000680 | S.TR | DTC114EUA T106 | B | 54.8/171.2 |
| Q601 | 1530002601 | S.TR | 2SC4215-O (TE85R,F) | T | 49.5/118.2 |
| Q680 | 1530002060 | S.TR | 2SC4081 T106 R | T | 37.5/163.2 |
| Q702 | 1530002601 | S.TR | 2SC4215-O (TE85R,F) | T | 31.4/110.9 |
| Q1001 | 1530003851 | S.TR | 2SC5551F-TD-E | B | 174/9 |
| Q1004 | 1590001960 | S.TR | XP4311 (TX) | T | 150/18.8 |
| Q1005 | 1590001960 | S.TR | XP4311 (TX) | T | 145.9/18.8 |
| Q1006 | 1530003851 | S.TR | 2SC5551F-TD-E | B | 150/37.6 |
| Q1007 | 1530003851 | S.TR | 2SC5551F-TD-E | B | 176.5/42.5 |
| Q1008 | 1530003851 | S.TR | 2SC5551F-TD-E | B | 160.5/42.5 |
| Q1101 | 1530003860 | TR | 2SC3950D | | |
| Q1102 | 1590000680 | S.TR | DTC114EUA T106 | T | 165.5/133.8 |
| Q1103 | 1520000561 | S.TR | 2SB1123 T-TD-E | B | 168.6/127.8 |
| Q1104 | 1530003860 | TR | 2SC3950D | | |
| Q1105 | 1530003842 | S.TR | 2SC5501A-4-TR-E | T | 166.5/142.1 |
| Q1205 | 1590001960 | S.TR | XP4311 (TX) | T | 158.8/55.6 |
| Q1209 | 1530003851 | S.TR | 2SC5551F-TD-E | B | 121/34.9 |
| Q1210 | 1530003851 | S.TR | 2SC5551F-TD-E | B | 111.5/34.9 |
| Q1211 | 1560001311 | S.FET | MMBFU310LT1G | T | 159.5/96.4 |
| Q1212 | 1560001311 | S.FET | MMBFU310LT1G | T | 153.5/96.4 |
| Q1213 | 1590000680 | S.TR | DTC114EUA T106 | B | 156.9/123.7 |
| Q1214 | 1520000561 | S.TR | 2SB1123 T-TD-E | B | 155.4/113.5 |
| Q1301 | 1530003151 | S.TR | 2SC4673D-TD-E | T | 157.8/120 |
| Q1352 | 1530003851 | S.TR | 2SC5551F-TD-E | B | 140/66.7 |
| Q1401 | 1530003842 | S.TR | 2SC5501A-4-TR-E | T | 131.9/105.8 |
| Q1402 | 1530003021 | S.TR | 2SC4402-3-TL-E | T | 123.4/111.8 |
| Q1403 | 1530003021 | S.TR | 2SC4402-3-TL-E | T | 123.4/114.3 |
| Q1501 | 1530003450 | S.TR | 2SC4835-R (TX) | T | 133.5/143.5 |
| Q1502 | 1530003450 | S.TR | 2SC4835-R (TX) | T | 120.4/143.5 |
| Q1651 | 1530002601 | S.TR | 2SC4215-O (TE85R,F) | B | 105.6/140.3 |
| Q1701 | 1590001960 | S.TR | XP4311 (TX) | T | 106.6/43.9 |
| Q1702 | 1590001960 | S.TR | XP4311 (TX) | T | 148.9/147.2 |
| Q1703 | 1590001960 | S.TR | XP4311 (TX) | T | 146.4/147.2 |
| D101 | 1750000520 | S.DIO | DAN222TL | T | 41.8/86.2 |
| D152 | 1720000590 | S.VCP | MA357 (TX) | T | 17.6/59.9 |

M.=Mounted side (T: Mounted on the Top side, B: Mounted on the Bottom side)
S.=Surface mount

## [RXPLL-B UNIT]

| REF NO. | ORDER NO. | DESCRIPTION | | M. | H/V LOCATION |
|---|---|---|---|---|---|
| D153 | 1790000491 | S.DIO | HSM88ASTR-E | T | 27.2/60.4 |
| D154 | 1790000491 | S.DIO | HSM88ASTR-E | T | 27.2/63.8 |
| D201 | 1750000520 | S.DIO | DAN222TL | T | 32.4/34.1 |
| D220 | 1720000590 | S.VCP | MA357 (TX) | T | 50.8/31.8 |
| D221 | 1720000590 | S.VCP | MA357 (TX) | T | 52.9/31.8 |
| D222 | 1790000620 | S.DIO | MA77 (TX) | T | 82.6/29.8 |
| D230 | 1720000590 | S.VCP | MA357 (TX) | T | 50.8/44.2 |
| D231 | 1720000590 | S.VCP | MA357 (TX) | T | 52.9/44.2 |
| D232 | 1790000620 | S.DIO | MA77 (TX) | T | 82.6/42.3 |
| D240 | 1720000590 | S.VCP | MA357 (TX) | T | 50.8/56.7 |
| D241 | 1720000590 | S.VCP | MA357 (TX) | T | 52.9/56.7 |
| D242 | 1790000620 | S.DIO | MA77 (TX) | T | 82.6/54.8 |
| D250 | 1720000590 | S.VCP | MA357 (TX) | T | 50.8/69.2 |
| D252 | 1790000620 | S.DIO | MA77 (TX) | T | 82.6/67.3 |
| D261 | 1720000590 | S.VCP | MA357 (TX) | T | 52.9/81.7 |
| D262 | 1790000620 | S.DIO | MA77 (TX) | T | 82.6/79.8 |
| D270 | 1720000590 | S.VCP | MA357 (TX) | T | 50.8/94.2 |
| D271 | 1720000590 | S.VCP | MA357 (TX) | T | 52.4/96.7 |
| D272 | 1790000620 | S.DIO | MA77 (TX) | T | 82.5/92 |
| D341 | 1790000620 | S.DIO | MA77 (TX) | T | 90/37.2 |
| D342 | 1160000070 | S.DIO | DAN202K T146 | B | 81.1/47.7 |
| D362 | 1790000620 | S.DIO | MA77 (TX) | T | 88.3/65.5 |
| D363 | 1790000620 | S.DIO | MA77 (TX) | T | 88.3/62 |
| D421 | 1790000620 | S.DIO | MA77 (TX) | T | 91.9/85 |
| D441 | 1790000620 | S.DIO | MA77 (TX) | T | 89.6/74.4 |
| D501 | 1750000520 | S.DIO | DAN222TL | T | 42/132 |
| D542 | 1720000590 | S.VCP | MA357 (TX) | T | 62.5/139.6 |
| D1101 | 1790000620 | S.DIO | MA77 (TX) | T | 177.6/146.6 |
| D1102 | 1790000620 | S.DIO | MA77 (TX) | T | 177.6/148.4 |
| D1351 | 1750000581 | S.DIO | 1SV307 (TPH3,F) | T | 140.8/71.1 |
| D1653 | 1750000550 | S.DIO | 1SS355 TE-17 | T | 138.9/167.2 |
| D1654 | 1750000550 | S.DIO | 1SS355 TE-17 | T | 142.5/167.2 |
| D1701 | 1790001670 | S.DIO | RB706F-40T106 | T | 170.5/160.8 |
| | | | | | |
| FI101 | 2020002090 | S.CER | SFECV10M7FD00-R0 | T | 26/73.9 |
| FI1401 | 2030000321 | S.MLH | FL-359A (64.555 MHz) | T | 116.3/88.5 |
| FI1402 | 2030000311 | S.MLH | FL-360A (64.555 MHz) | T | 107/88.5 |
| FI1403 | 2030000520 | S.MLH | DSF753SDF 64.555 (FL-397) | T | 126/85.5 |
| | | | | | |
| L1 | 6200003261 | S.COL | NLV32T-101J | T | 10.8/15.4 |
| L2 | 6200003261 | S.COL | NLV32T-101J | T | 29/19.9 |
| L10 | 6200003950 | S.COL | HF50ACC 322513-T | T | 38.6/14.7 |
| L11 | 6200003950 | S.COL | HF50ACC 322513-T | T | 13.8/15.4 |
| L12 | 6200003950 | S.COL | HF50ACC 322513-T | T | 16.8/15.4 |
| L13 | 6200003950 | S.COL | HF50ACC 322513-T | T | 29/15.4 |
| L20 | 6200003321 | S.COL | NLV32T-3R3J | T | 85.9/123.8 |
| L30 | 6200005491 | S.COL | NLV32T-331J | T | 20.6/120 |
| L101 | 6200001831 | S.COL | NLV32T-100J | T | 38.3/72.8 |
| L151 | 6130002970 | COL | LB-343 | | |
| L152 | 6200001831 | S.COL | NLV32T-100J | T | 30/54.5 |
| L201 | 6200005011 | S.COL | NLV25T-100J | T | 22.2/45 |
| L211 | 6200003661 | S.COL | NLV25T-R68J | B | 45.4/35.3 |
| L220 | 6200010790 | S.COL | C2520C-3R9G-A | T | 51.9/37.5 |
| L221 | 6190001421 | COL | #E526GN-110502 | | |
| L222 | 6200010790 | S.COL | C2520C-3R9G-A | T | 76.2/37.7 |
| L230 | 6200010830 | S.COL | C2520C-3R3G-A | T | 51.9/50 |
| L231 | 6190001421 | COL | #E526GN-110502 | | |
| L232 | 6200010830 | S.COL | C2520C-3R3G-A | T | 76.2/50.2 |
| L240 | 6200010830 | S.COL | C2520C-3R3G-A | T | 51.9/62.4 |
| L241 | 6190001421 | COL | #E526GN-110502 | | |
| L242 | 6200010830 | S.COL | C2520C-3R3G-A | T | 76.2/62.7 |
| L250 | 6200010820 | S.COL | C2520C-2R7G-A | T | 51.9/74.9 |
| L251 | 6190001421 | COL | #E526GN-110502 | | |
| L252 | 6200010820 | S.COL | C2520C-2R7G-A | T | 76.2/75.2 |
| L260 | 6200010820 | S.COL | C2520C-2R7G-A | T | 51.9/87.4 |
| L261 | 6190001411 | COL | #E526GN-110501 | | |
| L262 | 6200010820 | S.COL | C2520C-2R7G-A | T | 76.2/87.7 |
| L270 | 6200010810 | S.COL | C2520C-2R2G-A | T | 51.9/99.8 |
| L271 | 6190001411 | COL | #E526GN-110501 | | |
| L272 | 6200010810 | S.COL | C2520C-2R2G-A | T | 76/100.2 |
| L280 | 6200005011 | S.COL | NLV25T-100J | T | 67.4/25.5 |
| L302 | 6200001831 | S.COL | NLV32T-100J | T | 89.3/42.6 |
| L331 | 6200002641 | S.COL | NLV25T-R15J | T | 95.1/34.1 |
| L332 | 6200002411 | S.COL | NLV25T-056J | B | 93.2/36 |
| L341 | 6200003261 | S.COL | NLV32T-101J | T | 87/39.6 |
| L351 | 6200001831 | S.COL | NLV32T-100J | T | 91.3/62 |
| L421 | 6200008641 | S.COL | NLV32T-391J | T | 87/81 |
| L441 | 6200002601 | S.COL | NLV25T-047J | T | 91.9/72.3 |
| L442 | 6200010730 | S.COL | C2520C-68NG-A | T | 90.5/78.2 |
| L451 | 6200002641 | S.COL | NLV25T-R15J | T | 95/81 |
| L452 | 6200003261 | S.COL | NLV32T-101J | T | 87/78 |
| L501 | 6200001831 | S.COL | NLV32T-100J | T | 31/125.8 |
| L530 | 6200003171 | S.COL | NLV32T-330J | T | 14.6/134.9 |
| L531 | 6200003171 | S.COL | NLV32T-330J | T | 14.6/130.8 |
| L532 | 6200003171 | S.COL | NLV32T-330J | T | 15.5/127.1 |
| L541 | 6200010790 | S.COL | C2520C-3R9G-A | T | 56.3/139.6 |
| L542 | 6190001421 | COL | #E526GN-110502 | | |
| L543 | 6200010790 | S.COL | C2520C-3R9G-A | T | 68.4/147.9 |
| L544 | 6200003261 | S.COL | NLV32T-101J | B | 65.9/142.1 |
| L545 | 6200003261 | S.COL | NLV32T-101J | B | 51.3/139.6 |
| L561 | 6200003261 | S.COL | NLV32T-101J | B | 64/156 |
| L562 | 6200001831 | S.COL | NLV32T-100J | B | 74.6/151.8 |
| L565 | 6150004250 | COL | LS-471A (C-14922) | | |
| L566 | 6150004250 | COL | LS-471A (C-14922) | | |
| L591 | 6200007790 | S.COL | LQW2BHNR15J03L | T | 60.5/171.5 |
| L601 | 6200001831 | S.COL | NLV32T-100J | T | 49.5/123.6 |
| L602 | 6200002641 | S.COL | NLV25T-R15J | T | 54.1/118 |
| L603 | 6200002841 | S.COL | NLV25T-R22J | T | 57.1/117.2 |
| L651 | 6200001831 | S.COL | NLV32T-100J | T | 15.5/176.2 |
| L681 | 6200002981 | S.COL | NLV32T-R56J | T | 37.4/176.2 |
| L682 | 6200003041 | S.COL | NLV32T-R68J | T | 37.8/172.6 |
| L683 | 6200003051 | S.COL | NLV32T-R82J | T | 40.2/166.2 |

## [RXPLL-B UNIT]

| REF NO. | ORDER NO. | DESCRIPTION | | M. | H/V LOCATION |
|---|---|---|---|---|---|
| L701 | 6200003261 | S.COL | NLV32T-101J | T | 23.6/120 |
| L702 | 6150004971 | S.COL | LS-522-LF | T | 37.6/108.6 |
| L703 | 6150004971 | S.COL | LS-522-LF | T | 37.5/118.5 |
| L1001 | 6190001650 | COL | ELC06D102E | | |
| L1002 | 6140004400 | COL | LR-499 | | |
| L1004 | 6140003890 | COL | LR-488 | | |
| L1005 | 6180001000 | COL | LAL 04NA 102K | | |
| L1006 | 6140003900 | COL | LR-489 | | |
| L1007 | 6140003800 | COL | LR-439 | | |
| L1008 | 6190001650 | COL | ELC06D102E | | |
| L1009 | 6190001650 | COL | ELC06D102E | | |
| L1010 | 6140003880 | COL | LR-486 | | |
| L1011 | 6140003880 | COL | LR-486 | | |
| L1012 | 6140003800 | COL | LR-439 | | |
| L1013 | 6200010680 | S.COL | C2520C-R22G-A (0.22U) | T | 155/55.2 |
| L1014 | 6200010680 | S.COL | C2520C-R22G-A (0.22U) | T | 157.9/12.4 |
| L1015 | 6200007790 | S.COL | LQW2BHNR15J03L | B | 163.5/27.5 |
| L1052 | 6200010740 | S.COL | C2520C-R27G-A | T | 177.8/74.6 |
| L1053 | 6200010740 | S.COL | C2520C-R27G-A | T | 173.8/73.5 |
| L1054 | 6200010740 | S.COL | C2520C-R27G-A | T | 169.4/72.6 |
| L1055 | 6140003960 | COL | LR-495 | | |
| L1056 | 6200010730 | S.COL | C2520C-68NG-A | T | 171/83.8 |
| L1058 | 6190001631 | COL | #E544EN-100021 | | |
| L1060 | 6200010730 | S.COL | C2520C-68NG-A | T | 149.1/76.4 |
| L1062 | 6200011450 | S.COL | C2520C-R39G-A | T | 145.1/81.4 |
| L1063 | 6200010650 | S.COL | C2520C-R12G-A (0.12U) | T | 140.9/82.5 |
| L1071 | 6200007780 | S.COL | LQW2BHNR12J03L | B | 164.9/79.2 |
| L1072 | 6200007780 | S.COL | LQW2BHNR12J03L | B | 168/76.1 |
| L1091 | 6200003950 | S.COL | HF50ACC 322513-T | B | 171/149 |
| L1092 | 6200003950 | S.COL | HF50ACC 322513-T | T | 149.7/136.5 |
| L1093 | 6200003950 | S.COL | HF50ACC 322513-T | T | 157/135.2 |
| L1101 | 6140003920 | COL | LR-491 | | |
| L1102 | 6200010650 | S.COL | C2520C-R12G-A (0.12U) | T | 176.9/117.9 |
| L1103 | 6180001250 | COL | LAL 04NA 3R3K | | |
| L1104 | 6200010870 | S.COL | C2520C-R33G-A (0.33U) | T | 178.3/135.9 |
| L1105 | 6140003910 | COL | LR-490 | | |
| L1151 | 6140004640 | COL | LR-519 | | |
| L1201 | 6200007780 | S.COL | LQW2BHNR12J03L | B | 119.3/17.4 |
| L1208 | 6140003800 | COL | LR-439 | | |
| L1209 | 6200001831 | S.COL | NLV32T-100J | T | 121.1/20.8 |
| L1210 | 6140004440 | COL | LR-503 | | |
| L1211 | 6200009690 | S.COL | LQH43CN101K03L | T | 115.7/34.6 |
| L1212 | 6200001831 | S.COL | NLV32T-100J | T | 106.8/20.8 |
| L1213 | 6140004440 | COL | LR-503 | | |
| L1214 | 6200009690 | S.COL | LQH43CN101K03L | T | 105.9/34.8 |
| L1216 | 6140003800 | COL | LR-439 | | |
| L1217 | 6200007750 | S.COL | LQW2BHN56NJ03L | T | 147.9/63.7 |
| L1218 | 6200007770 | S.COL | LQW2BHNR10J03L | T | 153.3/65.1 |
| L1219 | 6200007790 | S.COL | LQW2BHNR15J03L | T | 153.2/68.4 |
| L1220 | 6140000930 | COL | LR-116 | | |
| L1221 | 6200003261 | S.COL | NLV32T-101J | B | 149.5/110.9 |
| L1222 | 6150001770 | COL | LS-198 | | |
| L1223 | 6200007750 | S.COL | LQW2BHN56NJ03L | B | 151.3/100.7 |
| L1228 | 6200010870 | S.COL | C2520C-R33G-A (0.33U) | T | 158.7/71.3 |
| L1229 | 6200003950 | S.COL | HF50ACC 322513-T | B | 164.7/115 |
| L1301 | 6200008090 | S.COL | LQW2BHN68NJ03L | T | 157.1/111.9 |
| L1302 | 6200008090 | S.COL | LQW2BHN68NJ03L | T | 156.4/115.5 |
| L1303 | 6200008090 | S.COL | LQW2BHN68NJ03L | T | 153.4/117.5 |
| L1304 | 6200010870 | S.COL | C2520C-R33G-A (0.33U) | T | 153.8/123 |
| L1305 | 6200003001 | S.COL | NLV32T-R22J | T | 159.2/124.5 |
| L1306 | 6200001831 | S.COL | NLV32T-100J | B | 152.7/118.6 |
| L1307 | 6200003001 | S.COL | NLV32T-R22J | T | 153.3/112 |
| L1351 | 6200001831 | S.COL | NLV32T-100J | T | 143/76.4 |
| L1353 | 6200010740 | S.COL | C2520C-R27G-A | T | 141.6/67.5 |
| L1354 | 6200001831 | S.COL | NLV32T-100J | T | 136.4/68 |
| L1401 | 6150004280 | COL | LS-484B (C-14927) | | |
| L1402 | 6150004280 | COL | LS-484B (C-14927) | | |
| L1403 | 6150004280 | COL | LS-484B (C-14927) | | |
| L1404 | 6150004280 | COL | LS-484B (C-14927) | | |
| L1405 | 6200007770 | S.COL | LQW2BHNR10J03L | B | 112.5/111.4 |
| L1406 | 6200007750 | S.COL | LQW2BHN56NJ03L | B | 116.6/111.4 |
| L1407 | 6140003930 | COL | LR-492 | | |
| L1408 | 6190001621 | COL | #E544EN-100028 | | |
| L1409 | 6200003191 | S.COL | NLV32T-470J | B | 135.8/125.4 |
| L1410 | 6150004280 | COL | LS-484B (C-14927) | | |
| L1411 | 6150004280 | COL | LS-484B (C-14927) | | |
| L1501 | 6200003520 | S.COL | ELJFB 102K-F | T | 142.1/145.1 |
| L1652 | 6200002520 | S.COL | ELJNC R18K-F | T | 112.9/133.1 |
| L1653 | 6200001831 | S.COL | NLV32T-100J | B | 105.4/124.6 |
| L1654 | 6200001831 | S.COL | NLV32T-100J | B | 112.4/141.9 |
| L1655 | 6200001831 | S.COL | NLV32T-100J | B | 124.7/139.8 |
| L1701 | 6200001831 | S.COL | NLV32T-100J | T | 167/160 |
| L1702 | 6200003950 | S.COL | HF50ACC 322513-T | T | 175.6/169.8 |
| L1703 | 6200003950 | S.COL | HF50ACC 322513-T | T | 172.6/169.8 |
| L1704 | 6200003950 | S.COL | HF50ACC 322513-T | T | 169.6/169.8 |
| L1705 | 6200003950 | S.COL | HF50ACC 322513-T | T | 165.5/169.8 |
| L1803 | 6200003950 | S.COL | HF50ACC 322513-T | B | 132/54.8 |
| L1804 | 6200003950 | S.COL | HF50ACC 322513-T | B | 118/154.8 |
| L1805 | 6200003950 | S.COL | HF50ACC 322513-T | B | 155.2/132 |
| L1807 | 6200003950 | S.COL | HF50ACC 322513-T | B | 118/151.3 |
| L1808 | 6200003950 | S.COL | HF50ACC 322513-T | B | 141.3/162 |
| L1809 | 6200003950 | S.COL | HF50ACC 322513-T | B | 149.5/115.6 |
| | | | | | |
| R1 | 7030005871 | S.RES | ERA3YKD 104V (100 k) | T | 32.5/19.2 |
| R2 | 7030005321 | S.RES | ERA3YED 103V (10 k) | T | 31.2/19.2 |
| R3 | 7030003550 | S.RES | ERJ3GEYJ 822 V (8.2 k) | T | 16.9/23.5 |
| R4 | 7030003550 | S.RES | ERJ3GEYJ 822 V (8.2 k) | T | 16.9/24.8 |
| R5 | 7030003550 | S.RES | ERJ3GEYJ 822 V (8.2 k) | T | 13.3/31.3 |
| R6 | 7030003550 | S.RES | ERJ3GEYJ 822 V (8.2 k) | T | 13.3/30 |
| R7 | 7030003500 | S.RES | ERJ3GEYJ 332 V (3.3 k) | B | 26.7/12.9 |
| R8 | 7030003470 | S.RES | ERJ3GEYJ 182 V (1.8 k) | B | 28.2/14.6 |
| R9 | 7030003680 | S.RES | ERJ3GEYJ 104 V (100 k) | B | 27.5/10.6 |
| R10 | 7030003360 | S.RES | ERJ3GEYJ 221 V (220) | T | 19/16 |

M.=Mounted side (T: Mounted on the Top side, B: Mounted on the Bottom side)
S.=Surface mount

## [RXPLL-B UNIT]

| REF NO. | ORDER NO. | DESCRIPTION | M. | H/V LOCATION |
|---|---|---|---|---|
| R11 | 7030003360 | S.RES ERJ3GEYJ 221 V (220) | T | 20.3/16 |
| R12 | 7030003360 | S.RES ERJ3GEYJ 221 V (220) | T | 22.4/16 |
| R13 | 7030003360 | S.RES ERJ3GEYJ 221 V (220) | T | 23.7/16 |
| R14 | 7030003360 | S.RES ERJ3GEYJ 221 V (220) | T | 25/16 |
| R15 | 7030003360 | S.RES ERJ3GEYJ 221 V (220) | T | 26.4/16.2 |
| R16 | 7030003360 | S.RES ERJ3GEYJ 221 V (220) | T | 32.5/15.4 |
| R17 | 7030003360 | S.RES ERJ3GEYJ 221 V (220) | T | 33.8/15.4 |
| R30 | 7030003240 | S.RES ERJ3GEYJ 220 V (22) | T | 21.7/113.7 |
| R31 | 7030003600 | S.RES ERJ3GEYJ 223 V (22 k) | T | 20.4/111.1 |
| R32 | 7030003320 | S.RES ERJ3GEYJ 101 V (100) | T | 23/113.7 |
| R33 | 7030003340 | S.RES ERJ3GEYJ 151 V (150) | T | 19.1/115 |
| R51 | 7030011030 | S.RES ERJ1TYJ 270U (27) | T | 66.3/13.9 |
| R61 | 7030011030 | S.RES ERJ1TYJ 270U (27) | T | 45.1/13.9 |
| R101 | 7030003800 | S.RES ERJ3GEYJ 105 V (1 M) | T | 34.1/101.5 |
| R102 | 7030003860 | S.RES ERJ3GE JPW V | B | 35.6/88.6 |
| R103 | 7030007230 | S.RES ERA3YED 102V (1 k) | T | 25.1/100.3 |
| R104 | 7030007230 | S.RES ERA3YED 102V (1 k) | T | 26.4/100.3 |
| R105 | 7030007230 | S.RES ERA3YED 102V (1 k) | T | 27.8/100.3 |
| R106 | 7030003360 | S.RES ERJ3GEYJ 221 V (220) | T | 29.1/100.3 |
| R107 | 7030003320 | S.RES ERJ3GEYJ 101 V (100) | T | 38/101.5 |
| R108 | 7030007230 | S.RES ERA3YED 102V (1 k) | T | 28.9/79 |
| R109 | 7030007230 | S.RES ERA3YED 102V (1 k) | T | 41.9/84.5 |
| R110 | 7030007220 | S.RES ERA3YED 202V (2 k) | T | 14.6/100.5 |
| R111 | 7030007220 | S.RES ERA3YED 202V (2 k) | T | 17.2/100.5 |
| R112 | 7030007220 | S.RES ERA3YED 202V (2 k) | T | 17.2/99.2 |
| R113 | 7030007220 | S.RES ERA3YED 202V (2 k) | T | 17.2/97.9 |
| R114 | 7030007220 | S.RES ERA3YED 202V (2 k) | T | 17.2/96.6 |
| R115 | 7030007220 | S.RES ERA3YED 202V (2 k) | T | 17.2/95.2 |
| R116 | 7030007220 | S.RES ERA3YED 202V (2 k) | T | 17.2/93.9 |
| R117 | 7030007220 | S.RES ERA3YED 202V (2 k) | T | 17.2/92.6 |
| R118 | 7030007200 | S.RES ERA3YEB 202V (2 k) | T | 17.2/91.3 |
| R119 | 7030007200 | S.RES ERA3YEB 202V (2 k) | T | 17.2/89.6 |
| R120 | 7030007200 | S.RES ERA3YEB 202V (2 k) | T | 17.2/87 |
| R121 | 7030007200 | S.RES ERA3YEB 202V (2 k) | T | 17.2/84.4 |
| R122 | 7030007200 | S.RES ERA3YEB 202V (2 k) | T | 17.2/81.8 |
| R123 | 7030007230 | S.RES ERA3YED 102V (1 k) | T | 14.6/99.2 |
| R124 | 7030007230 | S.RES ERA3YED 102V (1 k) | T | 14.6/97.9 |
| R125 | 7030007230 | S.RES ERA3YED 102V (1 k) | T | 14.6/96.6 |
| R126 | 7030007230 | S.RES ERA3YED 102V (1 k) | T | 14.6/95.2 |
| R127 | 7030007230 | S.RES ERA3YED 102V (1 k) | T | 14.6/93.9 |
| R128 | 7030007230 | S.RES ERA3YED 102V (1 k) | T | 14.6/92.6 |
| R129 | 7030007210 | S.RES ERA3YEB 102V (1 k) | T | 14.6/91.3 |
| R130 | 7030007210 | S.RES ERA3YEB 102V (1 k) | T | 14.6/89.6 |
| R131 | 7030007210 | S.RES ERA3YEB 102V (1 k) | T | 14.6/88.3 |
| R132 | 7030007210 | S.RES ERA3YEB 102V (1 k) | T | 14.6/87 |
| R133 | 7030007210 | S.RES ERA3YEB 102V (1 k) | T | 14.6/85.7 |
| R134 | 7030009861 | S.RES ERA3YED 471V (470) | T | 14.6/84.4 |
| R135 | 7030003860 | S.RES ERJ3GE JPW V | T | 30.4/75.8 |
| R136 | 7030003800 | S.RES ERJ3GEYJ 105 V (1 M) | T | 33/77.1 |
| R137 | 7030003200 | S.RES ERJ3GEYJ 100 V (10) | T | 35.5/75.8 |
| R138 | 7030003860 | S.RES ERJ3GE JPW V | T | 16.8/78.6 |
| R139 | 7030003860 | S.RES ERJ3GE JPW V | T | 17.6/75.8 |
| R150 | 7030003330 | S.RES ERJ3GEYJ 121 V (120) | B | 37.8/86.2 |
| R151 | 7030003220 | S.RES ERJ3GEYJ 150 V (15) | B | 38.6/88.1 |
| R152 | 7030005871 | S.RES ERA3YKD 104V (100 k) | B | 36.2/82.5 |
| R153 | 7030005321 | S.RES ERA3YED 103V (10 k) | T | 19.2/62.7 |
| R154 | 7030003320 | S.RES ERJ3GEYJ 101 V (100) | B | 26.3/54.1 |
| R155 | 7030003350 | S.RES ERJ3GEYJ 181 V (180) | B | 23/54.1 |
| R156 | 7030005871 | S.RES ERA3YKD 104V (100 k) | T | 24.6/53.1 |
| R157 | 7030005871 | S.RES ERA3YKD 104V (100 k) | T | 26.9/58 |
| R158 | 7030003340 | S.RES ERJ3GEYJ 151 V (150) | T | 30/57.3 |
| R159 | 7030003320 | S.RES ERJ3GEYJ 101 V (100) | B | 33.6/61.4 |
| R160 | 7030003360 | S.RES ERJ3GEYJ 221 V (220) | B | 33.6/59.6 |
| R161 | 7030003640 | S.RES ERJ3GEYJ 473 V (47 k) | B | 33.6/54.8 |
| R163 | 7030003220 | S.RES ERJ3GEYJ 150 V (15) | B | 30.2/56.6 |
| R164 | 7030003310 | S.RES ERJ3GEYJ 820 V (82) | B | 34.1/70.4 |
| R165 | 7030003320 | S.RES ERJ3GEYJ 101 V (100) | B | 30.8/70.4 |
| R166 | 7030003320 | S.RES ERJ3GEYJ 101 V (100) | B | 30.8/72.2 |
| R167 | 7030003240 | S.RES ERJ3GEYJ 220 V (22) | B | 37.4/75.8 |
| R168 | 7030003360 | S.RES ERJ3GEYJ 221 V (220) | B | 34.1/75.8 |
| R169 | 7030003640 | S.RES ERJ3GEYJ 473 V (47 k) | B | 30.8/75.8 |
| R202 | 7030007230 | S.RES ERA3YED 102V (1 k) | T | 22.2/39.7 |
| R203 | 7030007230 | S.RES ERA3YED 102V (1 k) | T | 22.2/38.4 |
| R204 | 7030003360 | S.RES ERJ3GEYJ 221 V (220) | T | 22.2/37.1 |
| R205 | 7030005321 | S.RES ERA3YED 103V (10 k) | T | 27.4/34 |
| R206 | 7030003220 | S.RES ERJ3GEYJ 150 V (15) | T | 31.1/45.7 |
| R210 | 7030005351 | S.RES ERA3YED 182V (1.8 k) | T | 35.6/37.5 |
| R217 | 7030009651 | S.RES ERA3YHD 820V (82) | B | 40.4/42.8 |
| R219 | 7030009691 | S.RES ERA3YED 101V (100) | B | 40/35.7 |
| R220 | 7030005871 | S.RES ERA3YKD 104V (100 k) | T | 73.2/37.6 |
| R221 | 7030005871 | S.RES ERA3YKD 104V (100 k) | T | 72.3/30.9 |
| R222 | 7030003400 | S.RES ERJ3GEYJ 471 V (470) | T | 81.4/38.3 |
| R223 | 7030007230 | S.RES ERA3YED 102V (1 k) | T | 81.9/31.9 |
| R224 | 7030003320 | S.RES ERJ3GEYJ 101 V (100) | T | 73.2/40.2 |
| R230 | 7030005871 | S.RES ERA3YKD 104V (100 k) | T | 73.2/50.1 |
| R231 | 7030005871 | S.RES ERA3YKD 104V (100 k) | T | 72.3/43.3 |
| R232 | 7030003360 | S.RES ERJ3GEYJ 221 V (220) | T | 81.4/50.8 |
| R233 | 7030007230 | S.RES ERA3YED 102V (1 k) | T | 81.9/44.4 |
| R234 | 7030003320 | S.RES ERJ3GEYJ 101 V (100) | T | 73.2/52.7 |
| R240 | 7030005871 | S.RES ERA3YKD 104V (100 k) | T | 73.2/62.6 |
| R241 | 7030005871 | S.RES ERA3YKD 104V (100 k) | T | 72.3/55.8 |
| R242 | 7030003360 | S.RES ERJ3GEYJ 221 V (220) | T | 81.4/63.3 |
| R243 | 7030007230 | S.RES ERA3YED 102V (1 k) | T | 81.9/56.9 |
| R244 | 7030003320 | S.RES ERJ3GEYJ 101 V (100) | T | 73.2/65.2 |
| R250 | 7030005871 | S.RES ERA3YKD 104V (100 k) | T | 73.2/75.1 |
| R251 | 7030005871 | S.RES ERA3YKD 104V (100 k) | T | 72.3/68.4 |
| R252 | 7030003360 | S.RES ERJ3GEYJ 221 V (220) | T | 81.4/75.8 |
| R253 | 7030007230 | S.RES ERA3YED 102V (1 k) | T | 81.9/69.4 |
| R254 | 7030003320 | S.RES ERJ3GEYJ 101 V (100) | T | 73.2/77.7 |
| R260 | 7030005871 | S.RES ERA3YKD 104V (100 k) | T | 73.2/87.6 |
| R261 | 7030005871 | S.RES ERA3YKD 104V (100 k) | T | 72.3/80.9 |
| R262 | 7030003400 | S.RES ERJ3GEYJ 471 V (470) | T | 81.4/88.3 |
| R263 | 7030007230 | S.RES ERA3YED 102V (1 k) | T | 81.9/81.9 |
| R264 | 7030003320 | S.RES ERJ3GEYJ 101 V (100) | T | 73.2/90.2 |

## [RXPLL-B UNIT]

| REF NO. | ORDER NO. | DESCRIPTION | M. | H/V LOCATION |
|---|---|---|---|---|
| R270 | 7030005871 | S.RES ERA3YKD 104V (100 k) | T | 73.2/99.5 |
| R271 | 7030005871 | S.RES ERA3YKD 104V (100 k) | T | 72.3/92.8 |
| R272 | 7030003360 | S.RES ERJ3GEYJ 221 V (220) | T | 81.4/100.8 |
| R273 | 7030007230 | S.RES ERA3YED 102V (1 k) | T | 81.9/93.9 |
| R274 | 7030003320 | S.RES ERJ3GEYJ 101 V (100) | T | 73.2/102.1 |
| R301 | 7030003200 | S.RES ERJ3GEYJ 100 V (10) | T | 86.5/30.6 |
| R302 | 7030007230 | S.RES ERA3YED 102V (1 k) | T | 86.5/29.3 |
| R303 | 7030003360 | S.RES ERJ3GEYJ 221 V (220) | T | 92.1/28 |
| R304 | 7030003490 | S.RES ERJ3GEYJ 272 V (2.7 k) | T | 94/30.1 |
| R305 | 7030003510 | S.RES ERJ3GEYJ 392 V (3.9 k) | T | 95.3/30.1 |
| R306 | 7030003360 | S.RES ERJ3GEYJ 221 V (220) | T | 94.7/32.2 |
| R307 | 7030009841 | S.RES ERA3YHD 330V (33) | T | 92.1/32.2 |
| R308 | 7030009851 | S.RES ERA3YED 271V (270) | B | 92.6/43.4 |
| R309 | 7030003540 | S.RES ERJ3GEYJ 682 V (6.8 k) | B | 89.1/47 |
| R310 | 7030003500 | S.RES ERJ3GEYJ 332 V (3.3 k) | B | 92.6/47 |
| R311 | 7030003350 | S.RES ERJ3GEYJ 181 V (180) | B | 89.1/45.2 |
| R312 | 7030003360 | S.RES ERJ3GEYJ 221 V (220) | B | 92.4/27.8 |
| R313 | 7030003490 | S.RES ERJ3GEYJ 272 V (2.7 k) | B | 91.1/23.1 |
| R314 | 7030003510 | S.RES ERJ3GEYJ 392 V (3.9 k) | B | 88.3/23.1 |
| R315 | 7030003360 | S.RES ERJ3GEYJ 221 V (220) | B | 87.5/25.1 |
| R316 | 7030003280 | S.RES ERJ3GEYJ 470 V (47) | B | 78.3/26.1 |
| R317 | 7030006220 | S.RES ERJ12YJ470U (47) | B | 90/31.4 |
| R318 | 7030009841 | S.RES ERA3YHD 330V (33) | B | 92.6/41.6 |
| R341 | 7030007230 | S.RES ERA3YED 102V (1 k) | T | 92.1/40.1 |
| R342 | 7030005321 | S.RES ERA3YED 103V (10 k) | T | 86.5/32.2 |
| R343 | 7030007230 | S.RES ERA3YED 102V (1 k) | T | 89.3/34.8 |
| R351 | 7030003200 | S.RES ERJ3GEYJ 100 V (10) | B | 89.1/52.4 |
| R352 | 7030010980 | S.RES ERA3YHD 470V (47) | T | 89.3/55.8 |
| R353 | 7030009591 | S.RES ERA3YED 472V (4.7 k) | T | 89.3/54.5 |
| R354 | 7030009591 | S.RES ERA3YED 472V (4.7 k) | T | 89.3/50.4 |
| R355 | 7030009591 | S.RES ERA3YED 472V (4.7 k) | T | 89.3/53.2 |
| R356 | 7030003320 | S.RES ERJ3GEYJ 101 V (100) | T | 89.3/57.1 |
| R357 | 7310005580 | S.TRI TMC3ADCS3X 4.7K | T | 93.6/52.7 |
| R358 | 7030010980 | S.RES ERA3YHD 470V (47) | T | 94.9/56.4 |
| R359 | 7030003320 | S.RES ERJ3GEYJ 101 V (100) | T | 94.9/59 |
| R360 | 7030003320 | S.RES ERJ3GEYJ 101 V (100) | B | 92.6/63.9 |
| R361 | 7030003490 | S.RES ERJ3GEYJ 272 V (2.7 k) | B | 89.2/62.1 |
| R362 | 7030003510 | S.RES ERJ3GEYJ 392 V (3.9 k) | B | 92.6/60.3 |
| R363 | 7030003320 | S.RES ERJ3GEYJ 101 V (100) | B | 92.6/65.7 |
| R364 | 7030003410 | S.RES ERJ3GEYJ 561 V (560) | T | 94.9/82.9 |
| R365 | 7030007860 | S.RES ERJ3GEYJ 8R2V (8.2) | T | 92/83.4 |
| R366 | 7030003410 | S.RES ERJ3GEYJ 561 V (560) | T | 94.9/84.2 |
| R368 | 7030005321 | S.RES ERA3YED 103V (10 k) | T | 86.1/59.6 |
| R369 | 7030008240 | S.RES ERJ12Y0R00U | B | 95.3/57.1 |
| R421 | 7030007230 | S.RES ERA3YED 102V (1 k) | T | 92.1/87.8 |
| R425 | 7030003410 | S.RES ERJ3GEYJ 561 V (560) | T | 90.1/81.6 |
| R427 | 7030003320 | S.RES ERJ3GEYJ 101 V (100) | B | 86.8/87.3 |
| R428 | 7030009861 | S.RES ERA3YED 471V (470) | B | 92.1/88 |
| R441 | 7030007230 | S.RES ERA3YED 102V (1 k) | T | 92.1/75.5 |
| R442 | 7030005321 | S.RES ERA3YED 103V (10 k) | T | 88.9/70.9 |
| R443 | 7030007230 | S.RES ERA3YED 102V (1 k) | T | 88.9/72.2 |
| R501 | 7030003360 | S.RES ERJ3GEYJ 221 V (220) | T | 29.2/153.1 |
| R502 | 7030007230 | S.RES ERA3YED 102V (1 k) | T | 27.9/153.1 |
| R503 | 7030007230 | S.RES ERA3YED 102V (1 k) | T | 26.5/153.1 |
| R504 | 7030007230 | S.RES ERA3YED 102V (1 k) | T | 25.2/153.1 |
| R506 | 7030003800 | S.RES ERJ3GEYJ 105 V (1 M) | T | 34/154.5 |
| R509 | 7030007230 | S.RES ERA3YED 102V (1 k) | T | 42.5/136 |
| R510 | 7030007220 | S.RES ERA3YED 202V (2 k) | T | 14.6/153.6 |
| R511 | 7030007220 | S.RES ERA3YED 202V (2 k) | T | 17.2/153.6 |
| R512 | 7030007220 | S.RES ERA3YED 202V (2 k) | T | 17.2/152.3 |
| R513 | 7030007220 | S.RES ERA3YED 202V (2 k) | T | 17.2/151 |
| R514 | 7030007220 | S.RES ERA3YED 202V (2 k) | T | 17.2/149.7 |
| R515 | 7030007220 | S.RES ERA3YED 202V (2 k) | T | 17.2/148.3 |
| R516 | 7030007220 | S.RES ERA3YED 202V (2 k) | T | 17.2/147 |
| R517 | 7030007220 | S.RES ERA3YED 202V (2 k) | T | 17.2/145.7 |
| R518 | 7030007200 | S.RES ERA3YEB 202V (2 k) | T | 17.2/144.4 |
| R519 | 7030007200 | S.RES ERA3YEB 202V (2 k) | T | 17.2/142.7 |
| R520 | 7030007200 | S.RES ERA3YEB 202V (2 k) | T | 17.2/141.4 |
| R521 | 7030007200 | S.RES ERA3YEB 202V (2 k) | T | 17.2/140.1 |
| R522 | 7030007200 | S.RES ERA3YEB 202V (2 k) | T | 17.2/138.8 |
| R523 | 7030007230 | S.RES ERA3YED 102V (1 k) | T | 14.6/152.3 |
| R524 | 7030007230 | S.RES ERA3YED 102V (1 k) | T | 14.6/151 |
| R525 | 7030007230 | S.RES ERA3YED 102V (1 k) | T | 14.6/149.7 |
| R526 | 7030007230 | S.RES ERA3YED 102V (1 k) | T | 14.6/148.3 |
| R527 | 7030007230 | S.RES ERA3YED 102V (1 k) | T | 14.6/147 |
| R528 | 7030007230 | S.RES ERA3YED 102V (1 k) | T | 14.6/145.7 |
| R529 | 7030007210 | S.RES ERA3YEB 102V (1 k) | T | 14.6/144.4 |
| R530 | 7030007210 | S.RES ERA3YEB 102V (1 k) | T | 14.6/142.7 |
| R531 | 7030007210 | S.RES ERA3YEB 102V (1 k) | T | 14.6/141.4 |
| R532 | 7030007210 | S.RES ERA3YEB 102V (1 k) | T | 14.6/140.1 |
| R533 | 7030007210 | S.RES ERA3YEB 102V (1 k) | T | 14.6/138.8 |
| R534 | 7030003860 | S.RES ERJ3GE JPW V | T | 22.2/127.6 |
| R535 | 7030003800 | S.RES ERJ3GEYJ 105 V (1 M) | T | 24.8/129.8 |
| R536 | 7030003200 | S.RES ERJ3GEYJ 100 V (10) | T | 28/128.3 |
| R537 | 7030007230 | S.RES ERA3YED 102V (1 k) | T | 30.3/131.9 |
| R538 | 7030003360 | S.RES ERJ3GEYJ 221 V (220) | B | 34.8/146.5 |
| R540 | 7030007230 | S.RES ERA3YED 102V (1 k) | B | 52.3/142.8 |
| R544 | 7030005871 | S.RES ERA3YKD 104V (100 k) | T | 69.4/140.4 |
| R545 | 7030005871 | S.RES ERA3YKD 104V (100 k) | T | 69.4/139.1 |
| R546 | 7030009861 | S.RES ERA3YED 471V (470) | T | 67.4/150.7 |
| R548 | 7030009591 | S.RES ERA3YED 472V (4.7 k) | B | 43.4/136.5 |
| R550 | 7030009691 | S.RES ERA3YED 101V (100) | B | 43.4/134.7 |
| R554 | 7030009891 | S.RES ERA3YED 151V (150) | B | 47.2/133.9 |
| R555 | 7030003380 | S.RES ERJ3GEYJ 331 V (330) | B | 61.9/142.1 |
| R556 | 7030005981 | S.RES ERA3YED 333V (33 k) | B | 44.2/128.2 |
| R561 | 7030003200 | S.RES ERJ3GEYJ 100 V (10) | T | 71.3/148.5 |
| R562 | 7030003360 | S.RES ERJ3GEYJ 221 V (220) | T | 65.7/155.5 |
| R563 | 7030003490 | S.RES ERJ3GEYJ 272 V (2.7 k) | T | 70.4/151.9 |
| R564 | 7030003510 | S.RES ERJ3GEYJ 392 V (3.9 k) | T | 70.4/150.6 |
| R565 | 7030003360 | S.RES ERJ3GEYJ 221 V (220) | T | 67/155.5 |
| R570 | 7030003230 | S.RES ERJ3GEYJ 180 V (18) | T | 63.1/155.5 |
| R571 | 7030003230 | S.RES ERJ3GEYJ 180 V (18) | T | 58.5/155 |
| R572 | 7030003290 | S.RES ERJ3GEYJ 560 V (56) | B | 57.2/156.3 |
| R573 | 7030003270 | S.RES ERJ3GEYJ 390 V (39) | T | 61.8/155.5 |

M.=Mounted side (T: Mounted on the Top side, B: Mounted on the Bottom side)
S.=Surface mount

## [RXPLL-B UNIT]

| REF NO. | ORDER NO. | DESCRIPTION | M. | H/V LOCATION |
|---|---|---|---|---|
| R574 | 7030003240 | S.RES ERJ3GEYJ 220 V (22) | T | 60.5/155.5 |
| R575 | 7030003270 | S.RES ERJ3GEYJ 390 V (39) | T | 58.5/156.3 |
| R580 | 7030009861 | S.RES ERA3YED 471V (470) | T | 41.9/153.7 |
| R581 | 7030003360 | S.RES ERJ3GEYJ 221 V (220) | T | 41.9/145.5 |
| R582 | 7030003600 | S.RES ERJ3GEYJ 223 V (22 k) | T | 41.9/149.5 |
| R587 | 7030003300 | S.RES ERJ3GEYJ 680 V (68) | T | 55.7/157.6 |
| R588 | 7030003340 | S.RES ERJ3GEYJ 151 V (150) | T | 58.5/158.9 |
| R589 | 7030003300 | S.RES ERJ3GEYJ 680 V (68) | T | 55.7/158.9 |
| R591 | 7030003320 | S.RES ERJ3GEYJ 101 V (100) | T | 58.2/169.9 |
| R592 | 7030005321 | S.RES ERA3YED 103V (10 k) | T | 58.5/167.9 |
| R593 | 7030003480 | S.RES ERJ3GEYJ 222 V (2.2 k) | T | 58.5/165.1 |
| R594 | 7030003320 | S.RES ERJ3GEYJ 101 V (100) | B | 61.9/168.1 |
| R595 | 7030003640 | S.RES ERJ3GEYJ 473 V (47 k) | B | 55.9/165.3 |
| R596 | 7030003540 | S.RES ERJ3GEYJ 682 V (6.8 k) | B | 54.7/168.9 |
| R601 | 7030009851 | S.RES ERA3YED 271V (270) | T | 51.7/118.2 |
| R602 | 7030003470 | S.RES ERJ3GEYJ 182 V (1.8 k) | T | 49.5/120.1 |
| R606 | 7030003360 | S.RES ERJ3GEYJ 221 V (220) | T | 45.3/115.6 |
| R607 | 7030003480 | S.RES ERJ3GEYJ 222 V (2.2 k) | T | 48.6/115.4 |
| R608 | 7030007230 | S.RES ERA3YED 102V (1 k) | T | 49.9/115.4 |
| R651 | 7030007230 | S.RES ERA3YED 102V (1 k) | B | 23.5/177.1 |
| R652 | 7030003360 | S.RES ERJ3GEYJ 221 V (220) | T | 13.5/170.8 |
| R653 | 7030007230 | S.RES ERA3YED 102V (1 k) | T | 13.5/169.5 |
| R654 | 7030007230 | S.RES ERA3YED 102V (1 k) | T | 13.5/168.2 |
| R656 | 7030003800 | S.RES ERJ3GEYJ 105 V (1 M) | T | 13.4/165.6 |
| R657 | 7030003320 | S.RES ERJ3GEYJ 101 V (100) | T | 20.2/161.4 |
| R661 | 7030007220 | S.RES ERA3YED 202V (2 k) | T | 31.7/162.8 |
| R662 | 7030007220 | S.RES ERA3YED 202V (2 k) | T | 31.7/164.1 |
| R663 | 7030007220 | S.RES ERA3YED 202V (2 k) | T | 31.7/165.4 |
| R664 | 7030007220 | S.RES ERA3YED 202V (2 k) | T | 31.7/166.7 |
| R665 | 7030007220 | S.RES ERA3YED 202V (2 k) | T | 31.7/168 |
| R666 | 7030007220 | S.RES ERA3YED 202V (2 k) | T | 31.7/169.3 |
| R667 | 7030007220 | S.RES ERA3YED 202V (2 k) | T | 31.7/170.6 |
| R668 | 7030007220 | S.RES ERA3YED 202V (2 k) | T | 31.7/171.9 |
| R669 | 7030007200 | S.RES ERA3YEB 202V (2 k) | T | 31.7/173.2 |
| R670 | 7030007200 | S.RES ERA3YEB 202V (2 k) | T | 31.7/174.5 |
| R671 | 7030007200 | S.RES ERA3YEB 202V (2 k) | T | 31.7/175.8 |
| R673 | 7030007230 | S.RES ERA3YED 102V (1 k) | T | 34.3/165.4 |
| R674 | 7030007230 | S.RES ERA3YED 102V (1 k) | T | 34.3/166.7 |
| R675 | 7030007230 | S.RES ERA3YED 102V (1 k) | T | 34.3/168 |
| R676 | 7030007230 | S.RES ERA3YED 102V (1 k) | T | 34.3/169.3 |
| R677 | 7030007230 | S.RES ERA3YED 102V (1 k) | T | 34.3/170.6 |
| R678 | 7030007230 | S.RES ERA3YED 102V (1 k) | T | 34.3/171.9 |
| R679 | 7030007210 | S.RES ERA3YEB 102V (1 k) | T | 34.3/173.2 |
| R680 | 7030007210 | S.RES ERA3YEB 102V (1 k) | T | 34.3/174.5 |
| R681 | 7030007210 | S.RES ERA3YEB 102V (1 k) | T | 34.3/175.8 |
| R683 | 7030003860 | S.RES ERJ3GE JPW V | B | 58.4/167.8 |
| R685 | 7030003460 | S.RES ERJ3GEYJ 152 V (1.5 k) | T | 38.4/169.7 |
| R686 | 7030003320 | S.RES ERJ3GEYJ 101 V (100) | T | 40.3/163.4 |
| R687 | 7030003470 | S.RES ERJ3GEYJ 182 V (1.8 k) | T | 37.4/165.1 |
| R688 | 7030003480 | S.RES ERJ3GEYJ 222 V (2.2 k) | T | 34.3/162.8 |
| R689 | 7030003360 | S.RES ERJ3GEYJ 221 V (220) | T | 33.6/161.5 |
| R690 | 7030009851 | S.RES ERA3YED 271V (270) | T | 46.4/165.3 |
| R691 | 7030003230 | S.RES ERJ3GEYJ 180 V (18) | T | 48.4/164.8 |
| R692 | 7030009851 | S.RES ERA3YED 271V (270) | T | 46.4/166.6 |
| R693 | 7030003360 | S.RES ERJ3GEYJ 221 V (220) | T | 37.1/169.7 |
| R704 | 7030009841 | S.RES ERA3YHD 330V (33) | T | 30.8/113.7 |
| R705 | 7030003600 | S.RES ERJ3GEYJ 223 V (22 k) | T | 29.5/113.7 |
| R706 | 7030005321 | S.RES ERA3YED 103V (10 k) | T | 28.2/113.7 |
| R707 | 7030009861 | S.RES ERA3YED 471V (470) | T | 30.8/108.1 |
| R708 | 7030003410 | S.RES ERJ3GEYJ 561 V (560) | T | 43.3/118.8 |
| R709 | 7030007860 | S.RES ERJ3GEYJ 8R2V (8.2) | T | 43.3/116 |
| R710 | 7030003410 | S.RES ERJ3GEYJ 561 V (560) | T | 43.8/121.1 |
| R711 | 7030003320 | S.RES ERJ3GEYJ 101 V (100) | T | 37.9/154.5 |
| R1000 | 7030003320 | S.RES ERJ3GEYJ 101 V (100) | B | 177.1/11.2 |
| R1003 | 7030010980 | S.RES ERA3YHD 470V (47) | T | 162/13.4 |
| R1004 | 7030007230 | S.RES ERA3YED 102V (1 k) | B | 166.4/12.9 |
| R1005 | 7030003550 | S.RES ERJ3GEYJ 822 V (8.2 k) | T | 144/26.1 |
| R1006 | 7030007230 | S.RES ERA3YED 102V (1 k) | T | 145.3/26.1 |
| R1007 | 7030004030 | S.RES ERJ3GEYJ 5R6 V (5.6) | B | 153.7/33.6 |
| R1008 | 7030003240 | S.RES ERJ3GEYJ 220 V (22) | T | 144/36.4 |
| R1009 | 7030010980 | S.RES ERA3YHD 470V (47) | T | 182.4/29.3 |
| R1010 | 7030010980 | S.RES ERA3YHD 470V (47) | T | 154.5/33.2 |
| R1013 | 7030007230 | S.RES ERA3YED 102V (1 k) | B | 172.7/40.8 |
| R1014 | 7030007230 | S.RES ERA3YED 102V (1 k) | B | 156.7/40.8 |
| R1015 | 7030003530 | S.RES ERJ3GEYJ 562 V (5.6 k) | B | 172.7/45.4 |
| R1016 | 7030003530 | S.RES ERJ3GEYJ 562 V (5.6 k) | B | 156.7/45.4 |
| R1017 | 7030003530 | S.RES ERJ3GEYJ 562 V (5.6 k) | B | 169.7/12.9 |
| R1020 | 7030003390 | S.RES ERJ3GEYJ 391 V (390) | T | 179.6/18.3 |
| R1021 | 7030003220 | S.RES ERJ3GEYJ 150 V (15) | T | 177/19.4 |
| R1022 | 7030003390 | S.RES ERJ3GEYJ 391 V (390) | T | 180.9/19.4 |
| R1023 | 7030010980 | S.RES ERA3YHD 470V (47) | B | 149.3/33.5 |
| R1024 | 7030003200 | S.RES ERJ3GEYJ 100 V (10) | B | 150.1/31.4 |
| R1025 | 7030003300 | S.RES ERJ3GEYJ 680 V (68) | T | 178.3/19.4 |
| R1026 | 7030003480 | S.RES ERJ3GEYJ 222 V (2.2 k) | B | 171.2/14.2 |
| R1027 | 7030003200 | S.RES ERJ3GEYJ 100 V (10) | B | 176.5/38.3 |
| R1028 | 7030003200 | S.RES ERJ3GEYJ 100 V (10) | B | 160.5/38.3 |
| R1029 | 7030010980 | S.RES ERA3YHD 470V (47) | B | 178.2/46.1 |
| R1030 | 7030010980 | S.RES ERA3YHD 470V (47) | B | 162.2/46.1 |
| R1051 | 7030003800 | S.RES ERJ3GEYJ 105 V (1 M) | T | 178.6/93.1 |
| R1054 | 7030011500 | S.RES ERA3YHD 270V (27) | T | 149.1/83.2 |
| R1055 | 7030000010 | S.RES MCR10EZHJ JPW (000) | T | 162.1/76.6 |
| R1056 | 7030000010 | S.RES MCR10EZHJ JPW (000) | T | 177.5/71.1 |
| R1071 | 7030010980 | S.RES ERA3YHD 470V (47) | B | 165.9/76.4 |
| R1072 | 7030000010 | S.RES MCR10EZHJ JPW (000) | T | 133.9/84.1 |
| R1073 | 7030000010 | S.RES MCR10EZHJ JPW (000) | T | 135.5/85.7 |
| R1101 | 7310004860 | S.TRI EVM-3YSX50 B53 (502) | T | 180.1/90.2 |
| R1102 | 7030005871 | S.RES ERA3YKD 104V (100 k) | B | 180.2/100.6 |
| R1103 | 7030007680 | S.RES ERJ8ENF 47R0V (47) | T | 181.7/104.7 |
| R1104 | 7030007680 | S.RES ERJ8ENF 47R0V (47) | T | 173.6/107.2 |
| R1105 | 7030003500 | S.RES ERJ3GEYJ 332 V (3.3 k) | T | 176.7/87.7 |
| R1106 | 7030009620 | S.RES ERJ12YJ120U (12) | B | 179.6/117.9 |
| R1107 | 7030010980 | S.RES ERA3YHD 470V (47) | T | 175.6/120.3 |
| R1109 | 7030007180 | S.RES ERJ12YJ150U (15) | B | 176.5/125.7 |
| R1110 | 7030003480 | S.RES ERJ3GEYJ 222 V (2.2 k) | B | 168.5/131.6 |

## [RXPLL-B UNIT]

| REF NO. | ORDER NO. | DESCRIPTION | M. | H/V LOCATION |
|---|---|---|---|---|
| R1111 | 7030003480 | S.RES ERJ3GEYJ 222 V (2.2 k) | T | 166.2/130.4 |
| R1113 | 7030003480 | S.RES ERJ3GEYJ 222 V (2.2 k) | T | 166.2/131.7 |
| R1114 | 7030004040 | S.RES ERJ3GEYJ 4R7 V (4.7) | T | 179.2/125.3 |
| R1115 | 7030006240 | S.RES ERJ12YJ181U (180) | B | 176.5/129.9 |
| R1116 | 7030007230 | S.RES ERA3YED 102V (1 k) | T | 175.7/135.3 |
| R1117 | 7030004040 | S.RES ERJ3GEYJ 4R7 V (4.7) | T | 175.7/134 |
| R1118 | 7030003480 | S.RES ERJ3GEYJ 222 V (2.2 k) | T | 175.4/132 |
| R1119 | 7030003470 | S.RES ERJ3GEYJ 182 V (1.8 k) | T | 178/132 |
| R1120 | 7030006070 | S.RES ERJ12YJ101U (100) | B | 177.3/141 |
| R1121 | 7030003240 | S.RES ERJ3GEYJ 220 V (22) | T | 178.6/139.6 |
| R1122 | 7030010980 | S.RES ERA3YHD 470V (47) | T | 171.9/131.1 |
| R1123 | 7030003480 | S.RES ERJ3GEYJ 222 V (2.2 k) | T | 165.7/137.4 |
| R1124 | 7030003460 | S.RES ERJ3GEYJ 152 V (1.5 k) | T | 165.7/140 |
| R1125 | 7030003420 | S.RES ERJ3GEYJ 681 V (680) | B | 171/142.2 |
| R1126 | 7030003200 | S.RES ERJ3GEYJ 100 V (10) | T | 168.4/142.2 |
| R1127 | 7030010980 | S.RES ERA3YHD 470V (47) | T | 174.6/142.9 |
| R1128 | 7030003470 | S.RES ERJ3GEYJ 182 V (1.8 k) | T | 174.6/146.6 |
| R1129 | 7030003470 | S.RES ERJ3GEYJ 182 V (1.8 k) | T | 174.6/148.4 |
| R1130 | 7030003480 | S.RES ERJ3GEYJ 222 V (2.2 k) | T | 180.6/146.4 |
| R1131 | 7030003640 | S.RES ERJ3GEYJ 473 V (47 k) | B | 177.4/90.7 |
| R1132 | 7310004860 | S.TRI EVM-3YSX50 B53 (502) | T | 179.4/84.3 |
| R1133 | 7030003500 | S.RES ERJ3GEYJ 332 V (3.3 k) | T | 175.5/82.5 |
| R1134 | 7030003640 | S.RES ERJ3GEYJ 473 V (47 k) | T | 175.5/83.8 |
| R1135 | 7030005871 | S.RES ERA3YKD 104V (100 k) | T | 182.2/97.8 |
| R1151 | 7030003280 | S.RES ERJ3GEYJ 470 V (47) | T | 134.8/63.9 |
| R1152 | 7030003280 | S.RES ERJ3GEYJ 470 V (47) | B | 117.2/56.3 |
| R1203 | 7030000010 | S.RES MCR10EZHJ JPW (000) | T | 157.5/74.9 |
| R1211 | 7030003860 | S.RES ERJ3GE JPW V | T | 117.6/7.8 |
| R1212 | 7030003860 | S.RES ERJ3GE JPW V | T | 124.8/51.1 |
| R1213 | 7030003200 | S.RES ERJ3GEYJ 100 V (10) | B | 118.8/25 |
| R1214 | 7030003200 | S.RES ERJ3GEYJ 100 V (10) | B | 109/25 |
| R1216 | 7030010980 | S.RES ERA3YHD 470V (47) | B | 120.7/31.6 |
| R1217 | 7030010980 | S.RES ERA3YHD 470V (47) | B | 111.2/31.6 |
| R1220 | 7030010980 | S.RES ERA3YHD 470V (47) | T | 118.7/17.3 |
| R1221 | 7030007230 | S.RES ERA3YED 102V (1 k) | T | 116.4/39.9 |
| R1222 | 7030003530 | S.RES ERJ3GEYJ 562 V (5.6 k) | T | 116.4/38.6 |
| R1223 | 7030010980 | S.RES ERA3YHD 470V (47) | T | 109.3/17.1 |
| R1224 | 7030007230 | S.RES ERA3YED 102V (1 k) | T | 106.6/39.9 |
| R1225 | 7030003530 | S.RES ERJ3GEYJ 562 V (5.6 k) | T | 106.6/38.6 |
| R1226 | 7030003410 | S.RES ERJ3GEYJ 561 V (560) | T | 158.9/92.9 |
| R1227 | 7030003410 | S.RES ERJ3GEYJ 561 V (560) | T | 154/92.9 |
| R1228 | 7310004860 | S.TRI EVM-3YSX50 B53 (502) | T | 156.4/92.9 |
| R1229 | 7030003480 | S.RES ERJ3GEYJ 222 V (2.2 k) | B | 156.1/117.4 |
| R1230 | 7030003480 | S.RES ERJ3GEYJ 222 V (2.2 k) | B | 156.1/119.2 |
| R1231 | 7030003480 | S.RES ERJ3GEYJ 222 V (2.2 k) | B | 156.1/121 |
| R1232 | 7030003600 | S.RES ERJ3GEYJ 223 V (22 k) | T | 156.3/97.5 |
| R1233 | 7030010980 | S.RES ERA3YHD 470V (47) | B | 152.5/109.4 |
| R1301 | 7030010980 | S.RES ERA3YHD 470V (47) | B | 155.7/97.5 |
| R1302 | 7030003860 | S.RES ERJ3GE JPW V | T | 159.3/116.8 |
| R1304 | 7030003620 | S.RES ERJ3GEYJ 333 V (33 k) | T | 156.5/123.2 |
| R1306 | 7030006230 | S.RES ERJ12YJ151U (150) | B | 153.8/124.8 |
| R1307 | 7030003300 | S.RES ERJ3GEYJ 680 V (68) | T | 156.5/128.4 |
| R1311 | 7030000010 | S.RES MCR10EZHJ JPW (000) | T | 140.3/98.8 |
| R1312 | 7030000010 | S.RES MCR10EZHJ JPW (000) | T | 143.2/104.1 |
| R1313 | 7030000010 | S.RES MCR10EZHJ JPW (000) | T | 143.2/101.5 |
| R1357 | 7030007230 | S.RES ERA3YED 102V (1 k) | B | 140.7/70.4 |
| R1358 | 7030003530 | S.RES ERJ3GEYJ 562 V (5.6 k) | B | 142.8/70.4 |
| R1359 | 7030010980 | S.RES ERA3YHD 470V (47) | T | 139.4/64.7 |
| R1360 | 7030007230 | S.RES ERA3YED 102V (1 k) | B | 146.4/67.1 |
| R1361 | 7030003380 | S.RES ERJ3GEYJ 331 V (330) | T | 139.3/68.8 |
| R1362 | 7030005871 | S.RES ERA3YKD 104V (100 k) | B | 144.6/70.4 |
| R1401 | 7030003200 | S.RES ERJ3GEYJ 100 V (10) | T | 131.5/103.3 |
| R1402 | 7030003300 | S.RES ERJ3GEYJ 680 V (68) | T | 126.4/111 |
| R1403 | 7030007230 | S.RES ERA3YED 102V (1 k) | T | 132/107.7 |
| R1404 | 7030009861 | S.RES ERA3YED 471V (470) | T | 134.6/104.3 |
| R1405 | 7030003340 | S.RES ERJ3GEYJ 151 V (150) | T | 137.2/104.3 |
| R1406 | 7030009591 | S.RES ERA3YED 472V (4.7 k) | T | 135.2/106.2 |
| R1407 | 7030003550 | S.RES ERJ3GEYJ 822 V (8.2 k) | B | 135.4/104.3 |
| R1408 | 7030003200 | S.RES ERJ3GEYJ 100 V (10) | T | 120.9/109 |
| R1409 | 7030009591 | S.RES ERA3YED 472V (4.7 k) | T | 120.5/114.9 |
| R1410 | 7030006091 | S.RES ERA3YED 822V (8.2 k) | B | 124.2/114.4 |
| R1411 | 7030005871 | S.RES ERA3YKD 104V (100 k) | T | 123.2/116.2 |
| R1412 | 7030003200 | S.RES ERJ3GEYJ 100 V (10) | T | 126.4/112.3 |
| R1413 | 7030003200 | S.RES ERJ3GEYJ 100 V (10) | T | 126.4/113.6 |
| R1414 | 7030005871 | S.RES ERA3YKD 104V (100 k) | B | 120.9/114.4 |
| R1415 | 7030010980 | S.RES ERA3YHD 470V (47) | T | 127/114.9 |
| R1416 | 7030003320 | S.RES ERJ3GEYJ 101 V (100) | B | 139.7/122.9 |
| R1417 | 7030000010 | S.RES MCR10EZHJ JPW (000) | B | 130.1/124.5 |
| R1418 | 7030000010 | S.RES MCR10EZHJ JPW (000) | B | 130.1/122.5 |
| R1419 | 7030003860 | S.RES ERJ3GE JPW V | B | 129.4/114.9 |
| R1501 | 7030010980 | S.RES ERA3YHD 470V (47) | T | 126.5/125.2 |
| R1502 | 7030009841 | S.RES ERA3YHD 330V (33) | T | 133/131 |
| R1503 | 7030009851 | S.RES ERA3YED 271V (270) | T | 130/146.3 |
| R1504 | 7030011050 | S.RES ERA3YHD 100V (10) | T | 131.3/143.5 |
| R1505 | 7030006091 | S.RES ERA3YED 822V (8.2 k) | B | 137.7/140.3 |
| R1506 | 7030007230 | S.RES ERA3YED 102V (1 k) | B | 137.7/147 |
| R1507 | 7030007230 | S.RES ERA3YED 102V (1 k) | T | 132.6/146.3 |
| R1508 | 7030007230 | S.RES ERA3YED 102V (1 k) | T | 133.9/146.3 |
| R1509 | 7030007230 | S.RES ERA3YED 102V (1 k) | T | 139.1/158.9 |
| R1510 | 7030005321 | S.RES ERA3YED 103V (10 k) | T | 139.1/157.6 |
| R1511 | 7030009861 | S.RES ERA3YED 471V (470) | T | 136.5/157.6 |
| R1512 | 7030003380 | S.RES ERJ3GEYJ 331 V (330) | T | 129.6/151.6 |
| R1513 | 7030003380 | S.RES ERJ3GEYJ 331 V (330) | T | 129.6/155.5 |
| R1514 | 7030005321 | S.RES ERA3YED 103V (10 k) | T | 129.6/160.8 |
| R1515 | 7030005321 | S.RES ERA3YED 103V (10 k) | T | 133.5/160.8 |
| R1516 | 7310005610 | S.TRI TMC3ADC13X 1K | T | 119.2/157.7 |
| R1517 | 7030005321 | S.RES ERA3YED 103V (10 k) | T | 115.3/158 |
| R1518 | 7030005321 | S.RES ERA3YED 103V (10 k) | T | 134.8/160.8 |
| R1519 | 7030005321 | S.RES ERA3YED 103V (10 k) | T | 131.7/171.7 |
| R1520 | 7030005321 | S.RES ERA3YED 103V (10 k) | T | 136.1/160.8 |
| R1521 | 7030010980 | S.RES ERA3YHD 470V (47) | T | 126.5/133 |
| R1522 | 7030009841 | S.RES ERA3YHD 330V (33) | T | 126/141.1 |
| R1523 | 7030009851 | S.RES ERA3YED 271V (270) | T | 123.7/146.3 |
| R1524 | 7030011050 | S.RES ERA3YHD 100V (10) | T | 122.4/143.5 |

M.=Mounted side (T: Mounted on the Top side, B: Mounted on the Bottom side)
S.=Surface mount

## [RXPLL-B UNIT]

| REF NO. | ORDER NO. | DESCRIPTION | M. | H/V LOCATION |
|---|---|---|---|---|
| R1525 | 7030007230 | S.RES ERA3YED 102V (1 k) | B | 128.8/147 |
| R1526 | 7030003460 | S.RES ERJ3GEYJ 152 V (1.5 k) | B | 137.7/142.1 |
| R1527 | 7030007230 | S.RES ERA3YED 102V (1 k) | T | 119.8/146.3 |
| R1528 | 7030007230 | S.RES ERA3YED 102V (1 k) | T | 121.1/146.3 |
| R1529 | 7030007230 | S.RES ERA3YED 102V (1 k) | T | 115.3/152.3 |
| R1530 | 7030003380 | S.RES ERJ3GEYJ 331 V (330) | T | 128/151.6 |
| R1531 | 7030003380 | S.RES ERJ3GEYJ 331 V (330) | T | 128/155.5 |
| R1532 | 7030005321 | S.RES ERA3YED 103V (10 k) | T | 124.1/160.8 |
| R1533 | 7030005321 | S.RES ERA3YED 103V (10 k) | T | 128/160.8 |
| R1534 | 7030005321 | S.RES ERA3YED 103V (10 k) | T | 122.8/160.8 |
| R1535 | 7030005321 | S.RES ERA3YED 103V (10 k) | T | 121.5/160.8 |
| R1536 | 7030005321 | S.RES ERA3YED 103V (10 k) | T | 129/171.7 |
| R1537 | 7030003320 | S.RES ERJ3GEYJ 101 V (100) | T | 115.5/164.5 |
| R1538 | 7030003320 | S.RES ERJ3GEYJ 101 V (100) | T | 107.1/170.1 |
| R1539 | 7030008061 | S.RES ERA3YED 222V (2.2 k) | B | 131.8/176.4 |
| R1540 | 7030010390 | S.RES ERA3YED 821V (820) | B | 128.7/177.1 |
| R1541 | 7030003320 | S.RES ERJ3GEYJ 101 V (100) | T | 107.1/178.8 |
| R1542 | 7030003320 | S.RES ERJ3GEYJ 101 V (100) | T | 115.5/173.2 |
| R1543 | 7030009691 | S.RES ERA3YED 101V (100) | B | 130.6/179 |
| R1651 | 7030003380 | S.RES ERJ3GEYJ 331 V (330) | B | 100.9/144.8 |
| R1652 | 7030003220 | S.RES ERJ3GEYJ 150 V (15) | B | 102.7/144.8 |
| R1653 | 7030003380 | S.RES ERJ3GEYJ 331 V (330) | B | 101.9/142.9 |
| R1654 | 7030010980 | S.RES ERA3YHD 470V (47) | B | 105.5/142.2 |
| R1655 | 7030009861 | S.RES ERA3YED 471V (470) | B | 108.8/140 |
| R1656 | 7030003630 | S.RES ERJ3GEYJ 393 V (39 k) | B | 108.3/142.2 |
| R1657 | 7030005871 | S.RES ERA3YKD 104V (100 k) | T | 108/133.1 |
| R1658 | 7030003320 | S.RES ERJ3GEYJ 101 V (100) | T | 110.6/133.1 |
| R1659 | 7030009691 | S.RES ERA3YED 101V (100) | T | 115.8/124.9 |
| R1660 | 7030009691 | S.RES ERA3YED 101V (100) | T | 115.8/128.7 |
| R1661 | 7030005321 | S.RES ERA3YED 103V (10 k) | T | 135.1/175.4 |
| R1662 | 7030005321 | S.RES ERA3YED 103V (10 k) | T | 135.2/172.8 |
| R1663 | 7030005321 | S.RES ERA3YED 103V (10 k) | T | 144.3/175.4 |
| R1664 | 7030005321 | S.RES ERA3YED 103V (10 k) | T | 139.9/172.1 |
| R1665 | 7030003320 | S.RES ERJ3GEYJ 101 V (100) | T | 109.3/133.1 |
| R1667 | 7030003360 | S.RES ERJ3GEYJ 221 V (220) | T | 139.2/170.2 |
| R1668 | 7030003360 | S.RES ERJ3GEYJ 221 V (220) | T | 141.8/170.2 |
| R1670 | 7030003800 | S.RES ERJ3GEYJ 105 V (1 M) | T | 140.2/164.1 |
| R1673 | 7030007230 | S.RES ERA3YED 102V (1 k) | B | 146/174.5 |
| R1674 | 7030009851 | S.RES ERA3YED 271V (270) | B | 145.1/177.1 |
| R1675 | 7030009591 | S.RES ERA3YED 472V (4.7 k) | T | 136.6/170.2 |
| R1677 | 7030009591 | S.RES ERA3YED 472V (4.7 k) | T | 143.1/170.2 |
| R1701 | 7030003360 | S.RES ERJ3GEYJ 221 V (220) | T | 162.4/147.4 |
| R1703 | 7030003360 | S.RES ERJ3GEYJ 221 V (220) | T | 159.8/147.4 |
| R1704 | 7030003360 | S.RES ERJ3GEYJ 221 V (220) | T | 158.5/147.4 |
| R1706 | 7030003360 | S.RES ERJ3GEYJ 221 V (220) | T | 155.9/147.4 |
| R1707 | 7030003360 | S.RES ERJ3GEYJ 221 V (220) | T | 154.6/147.4 |
| R1708 | 7030003360 | S.RES ERJ3GEYJ 221 V (220) | T | 153.3/147.4 |
| R1709 | 7030003480 | S.RES ERJ3GEYJ 222 V (2.2 k) | T | 149.7/159.3 |
| R1710 | 7030003480 | S.RES ERJ3GEYJ 222 V (2.2 k) | T | 148.4/159.3 |
| R1711 | 7030003540 | S.RES ERJ3GEYJ 682 V (6.8 k) | T | 147.1/159.3 |
| R1712 | 7030003540 | S.RES ERJ3GEYJ 682 V (6.8 k) | T | 145.8/159.3 |
| R1713 | 7030003660 | S.RES ERJ3GEYJ 683 V (68 k) | T | 145.8/157.2 |
| R1714 | 7030003660 | S.RES ERJ3GEYJ 683 V (68 k) | T | 145.8/155.9 |
| R1715 | 7030003540 | S.RES ERJ3GEYJ 682 V (6.8 k) | T | 143.9/164.8 |
| R1716 | 7030007230 | S.RES ERA3YED 102V (1 k) | T | 164.2/164.8 |
| R1717 | 7030007230 | S.RES ERA3YED 102V (1 k) | T | 164.2/163.5 |
| R1718 | 7030007230 | S.RES ERA3YED 102V (1 k) | T | 164.2/162.2 |
| R1719 | 7030003660 | S.RES ERJ3GEYJ 683 V (68 k) | T | 144.3/166.8 |
| | | | | |
| C1 | 4030011600 | S.CER C1608 JB 1E 104K-T | T | 10.8/18.2 |
| C2 | 4030006880 | S.CER C1608 JB 1H 472K-T | T | 25.7/29.5 |
| C14 | 4030006880 | S.CER C1608 JB 1H 472K-T | T | 37.7/12.5 |
| C15 | 4030006880 | S.CER C1608 JB 1H 472K-T | T | 31.2/15.4 |
| C16 | 4030006880 | S.CER C1608 JB 1H 472K-T | T | 35.1/15.4 |
| C17 | 4030006880 | S.CER C1608 JB 1H 472K-T | T | 13.8/12.6 |
| C18 | 4030006880 | S.CER C1608 JB 1H 472K-T | T | 16.8/12.6 |
| C19 | 4030006880 | S.CER C1608 JB 1H 472K-T | T | 29.5/12.6 |
| C20 | 4030006880 | S.CER C1608 JB 1H 472K-T | T | 87.4/127.8 |
| C21 | 4030006880 | S.CER C1608 JB 1H 472K-T | T | 88.7/127.8 |
| C22 | 4030006880 | S.CER C1608 JB 1H 472K-T | T | 90/127.8 |
| C30 | 4030011600 | S.CER C1608 JB 1E 104K-T | T | 19.1/112.4 |
| C31 | 4030011600 | S.CER C1608 JB 1E 104K-T | T | 20.4/113.7 |
| C32 | 4030011600 | S.CER C1608 JB 1E 104K-T | T | 24.3/111.1 |
| C51 | 4510008520 | S.ELE EEE1CA470SP | T | 84/20.3 |
| C52 | 4030011600 | S.CER C1608 JB 1E 104K-T | T | 78.9/23.7 |
| C53 | 4030011600 | S.CER C1608 JB 1E 104K-T | T | 75.1/23.7 |
| C54 | 4510008500 | S.ELE EEE1CA101WP | T | 70/20.3 |
| C61 | 4510008520 | S.ELE EEE1CA470SP | T | 62.9/20.3 |
| C62 | 4030011600 | S.CER C1608 JB 1E 104K-T | B | 58.2/19.9 |
| C63 | 4030011600 | S.CER C1608 JB 1E 104K-T | B | 54.8/19.9 |
| C64 | 4510008500 | S.ELE EEE1CA101WP | T | 50.1/20.3 |
| C101 | 4030006880 | S.CER C1608 JB 1H 472K-T | T | 39.7/80.7 |
| C102 | 4030011600 | S.CER C1608 JB 1E 104K-T | T | 41.8/79.9 |
| C103 | 4510008540 | S.ELE EEE1CA100SR | T | 40.2/76.8 |
| C104 | 4030011600 | S.CER C1608 JB 1E 104K-T | T | 21.4/100.2 |
| C105 | 4030011600 | S.CER C1608 JB 1E 104K-T | T | 21.4/88.2 |
| C106 | 4030011600 | S.CER C1608 JB 1E 104K-T | T | 21.4/84.4 |
| C107 | 4030011600 | S.CER C1608 JB 1E 104K-T | T | 24.4/79.8 |
| C108 | 4030011600 | S.CER C1608 JB 1E 104K-T | T | 27/79.8 |
| C109 | 4030011600 | S.CER C1608 JB 1E 104K-T | T | 30.8/79.8 |
| C110 | 4030011600 | S.CER C1608 JB 1E 104K-T | T | 36.8/79.8 |
| C111 | 4030011600 | S.CER C1608 JB 1E 104K-T | T | 41.2/88.5 |
| C112 | 4030011600 | S.CER C1608 JB 1E 104K-T | T | 41.3/82.6 |
| C114 | 4030011600 | S.CER C1608 JB 1E 104K-T | T | 39.5/98.4 |
| C115 | 4030011600 | S.CER C1608 JB 1E 104K-T | T | 38.1/98.4 |
| C116 | 4030011600 | S.CER C1608 JB 1E 104K-T | T | 35.3/99.6 |
| C117 | 4030011600 | S.CER C1608 JB 1E 104K-T | T | 23.3/98.8 |
| C118 | 4030011600 | S.CER C1608 JB 1E 104K-T | T | 42.6/82.6 |
| C120 | 4030006880 | S.CER C1608 JB 1H 472K-T | T | 36.7/101.5 |
| C121 | 4030011600 | S.CER C1608 JB 1E 104K-T | T | 39.5/101.5 |
| C125 | 4030011600 | S.CER C1608 JB 1E 104K-T | T | 14.6/83.1 |
| C129 | 4030011600 | S.CER C1608 JB 1E 104K-T | T | 33.4/79.8 |
| C130 | 4030017810 | S.CER C1608 CH 1H 102J-T | B | 47.6/106.6 |

## [RXPLL-B UNIT]

| REF NO. | ORDER NO. | DESCRIPTION | M. | H/V LOCATION |
|---|---|---|---|---|
| C131 | 4030011600 | S.CER C1608 JB 1E 104K-T | T | 30.4/73.2 |
| C132 | 4030011600 | S.CER C1608 JB 1E 104K-T | T | 35.5/73.2 |
| C133 | 4030006880 | S.CER C1608 JB 1H 472K-T | B | 43.5/98.6 |
| C134 | 4030006880 | S.CER C1608 JB 1H 472K-T | B | 43.5/96.8 |
| C135 | 4030006880 | S.CER C1608 JB 1H 472K-T | T | 46/95.5 |
| C136 | 4030006880 | S.CER C1608 JB 1H 472K-T | T | 46/94.2 |
| C137 | 4030006880 | S.CER C1608 JB 1H 472K-T | T | 46/90.3 |
| C138 | 4030006880 | S.CER C1608 JB 1H 472K-T | T | 46.1/87.7 |
| C139 | 4030006880 | S.CER C1608 JB 1H 472K-T | B | 43.5/100.4 |
| C141 | 4030004740 | S.CER C2012 JB 1H 472K-T | B | 34.3/85.1 |
| C142 | 4550007470 | S.TAN F931A107MNMBMA | B | 19.4/87.4 |
| C150 | 4340000050 | S.MLR ECH-U 1C472JB5 | T | 16.3/64.6 |
| C151 | 4550007520 | S.TAN F931A106MAABMA | B | 38.6/92.1 |
| C152 | 4030007070 | S.CER C1608 CH 1H 330J-T | T | 19.2/59.9 |
| C153 | 4030009910 | S.CER C1608 CH 1H 040B-T | T | 21.3/55.4 |
| C154 | 4610001850 | S.TRI TZB4R200AB10R00 | T | 17.6/55.1 |
| C155 | 4030016550 | S.CER CM105 CH 151G 50AT | T | 24.1/55.4 |
| C156 | 4030016550 | S.CER CM105 CH 151G 50AT | T | 26.9/55.4 |
| C157 | 4030016550 | S.CER CM105 CH 151G 50AT | T | 26.9/56.7 |
| C158 | 4030006880 | S.CER C1608 JB 1H 472K-T | T | 23.3/53.1 |
| C159 | 4030006880 | S.CER C1608 JB 1H 472K-T | B | 23/51.9 |
| C161 | 4510008540 | S.ELE EEE1CA100SR | T | 31.3/61 |
| C162 | 4030009920 | S.CER C1608 CH 1H 050B-T | B | 33.6/53 |
| C163 | 4030011600 | S.CER C1608 JB 1E 104K-T | B | 36.9/59.6 |
| C164 | 4030006880 | S.CER C1608 JB 1H 472K-T | B | 30.3/54.8 |
| C165 | 4030006880 | S.CER C1608 JB 1H 472K-T | B | 30.8/74 |
| C166 | 4030011600 | S.CER C1608 JB 1E 104K-T | B | 34.9/78.2 |
| C167 | 4030006880 | S.CER C1608 JB 1H 472K-T | B | 37.4/74 |
| C201 | 4030011340 | S.CER C1608 CH 1H 471J-T | T | 33.8/40.4 |
| C202 | 4510009280 | S.ELE EEE1EA4R7SR | T | 26.5/44 |
| C203 | 4030006900 | S.CER C1608 JB 1H 103K-T | T | 32.5/38.3 |
| C204 | 4030006880 | S.CER C1608 JB 1H 472K-T | T | 25.4/35.3 |
| C205 | 4030006880 | S.CER C1608 JB 1H 472K-T | T | 25.4/34 |
| C206 | 4030006880 | S.CER C1608 JB 1H 472K-T | T | 31.1/43 |
| C207 | 4030007030 | S.CER C1608 CH 1H 150J-T | B | 46.8/32.4 |
| C208 | 4030007030 | S.CER C1608 CH 1H 150J-T | T | 32.5/41 |
| C209 | 4030011340 | S.CER C1608 CH 1H 471J-T | T | 44.1/26.1 |
| C210 | 4550007620 | S.TAN F931V224MAABMA | T | 46.2/26.7 |
| C211 | 4550007300 | S.TAN F931A335MAABMA | B | 46.1/41.6 |
| C219 | 4030006880 | S.CER C1608 JB 1H 472K-T | T | 33.8/37.8 |
| C220 | 4030007130 | S.CER C1608 CH 1H 101J-T | T | 54.7/37.6 |
| C221 | 4030009520 | S.CER C1608 CH 1H 020B-T | T | 54.7/32 |
| C222 | 4610001860 | S.TRI TZB4Z060AB10R00 | T | 68.1/32.6 |
| C223 | 4030007080 | S.CER C1608 CH 1H 390J-T | T | 73.2/36.3 |
| C224 | 4030007010 | S.CER C1608 CH 1H 100D-T | T | 73.2/38.9 |
| C225 | 4030007050 | S.CER C1608 CH 1H 220J-T | T | 73.6/30.9 |
| C226 | 4030006880 | S.CER C1608 JB 1H 472K-T | T | 71/30.9 |
| C227 | 4030009920 | S.CER C1608 CH 1H 050B-T | T | 75.1/32.6 |
| C228 | 4510008540 | S.ELE EEE1CA100SR | T | 68.8/37.8 |
| C229 | 4030009530 | S.CER C1608 CH 1H 030B-T | T | 77.8/32.6 |
| C230 | 4030007100 | S.CER C1608 CH 1H 560J-T | T | 54.7/50 |
| C231 | 4030009510 | S.CER C1608 CH 1H 010B-T | T | 54.7/44.6 |
| C232 | 4610001860 | S.TRI TZB4Z060AB10R00 | T | 68.1/45.1 |
| C233 | 4030007070 | S.CER C1608 CH 1H 330J-T | T | 73.2/48.8 |
| C234 | 4030009920 | S.CER C1608 CH 1H 050B-T | T | 73.2/51.4 |
| C235 | 4030007020 | S.CER C1608 CH 1H 120J-T | T | 73.6/43.3 |
| C236 | 4030006880 | S.CER C1608 JB 1H 472K-T | T | 71/43.3 |
| C237 | 4030009910 | S.CER C1608 CH 1H 040B-T | T | 75.1/45 |
| C238 | 4510008540 | S.ELE EEE1CA100SR | T | 68.8/50.3 |
| C239 | 4030009910 | S.CER C1608 CH 1H 040B-T | T | 77.8/45 |
| C240 | 4030007080 | S.CER C1608 CH 1H 390J-T | T | 54.7/62.5 |
| C241 | 4030009510 | S.CER C1608 CH 1H 010B-T | T | 54.7/57.1 |
| C242 | 4610001860 | S.TRI TZB4Z060AB10R00 | T | 68.1/57.6 |
| C243 | 4030007060 | S.CER C1608 CH 1H 270J-T | T | 73.2/61.3 |
| C244 | 4030009910 | S.CER C1608 CH 1H 040B-T | T | 73.2/63.9 |
| C245 | 4030009920 | S.CER C1608 CH 1H 050B-T | T | 73.6/55.8 |
| C246 | 4030006880 | S.CER C1608 JB 1H 472K-T | T | 71/55.9 |
| C247 | 4030009530 | S.CER C1608 CH 1H 030B-T | T | 75.1/57.5 |
| C248 | 4510008540 | S.ELE EEE1CA100SR | T | 68.8/62.9 |
| C250 | 4030007100 | S.CER C1608 CH 1H 560J-T | T | 54.7/75 |
| C251 | 4030009540 | S.CER C1608 CH 1H 1R5B-T | T | 54.7/69.6 |
| C252 | 4610001810 | S.TRI TZB4Z030AB10R00 | T | 68.1/70.1 |
| C253 | 4030007080 | S.CER C1608 CH 1H 390J-T | T | 73.2/73.8 |
| C254 | 4030009530 | S.CER C1608 CH 1H 030B-T | T | 73.2/76.4 |
| C255 | 4030006990 | S.CER C1608 CH 1H 080D-T | T | 73.6/68.4 |
| C256 | 4030006880 | S.CER C1608 JB 1H 472K-T | T | 71/68.4 |
| C257 | 4030007010 | S.CER C1608 CH 1H 100D-T | T | 75.1/70 |
| C258 | 4510008540 | S.ELE EEE1CA100SR | T | 68.8/75.4 |
| C260 | 4030007110 | S.CER C1608 CH 1H 680J-T | T | 54.7/87.5 |
| C262 | 4610001810 | S.TRI TZB4Z030AB10R00 | T | 68.1/82.6 |
| C263 | 4030007080 | S.CER C1608 CH 1H 390J-T | T | 73.2/86.3 |
| C264 | 4030009530 | S.CER C1608 CH 1H 030B-T | T | 73.2/88.9 |
| C265 | 4030011770 | S.CER C1608 CH 1H 060B-T | T | 73.6/80.9 |
| C266 | 4030006880 | S.CER C1608 JB 1H 472K-T | T | 71/80.9 |
| C267 | 4030007010 | S.CER C1608 CH 1H 100D-T | T | 75.1/82.5 |
| C268 | 4510008540 | S.ELE EEE1CA100SR | T | 68.8/87.9 |
| C272 | 4610001860 | S.TRI TZB4Z060AB10R00 | T | 68.1/95.1 |
| C273 | 4030007050 | S.CER C1608 CH 1H 220J-T | T | 73.2/98.2 |
| C274 | 4030009530 | S.CER C1608 CH 1H 030B-T | T | 73.2/100.8 |
| C275 | 4030009920 | S.CER C1608 CH 1H 050B-T | T | 73.6/92.8 |
| C276 | 4030006880 | S.CER C1608 JB 1H 472K-T | T | 71/92.8 |
| C277 | 4030007010 | S.CER C1608 CH 1H 100D-T | T | 75.1/95 |
| C278 | 4510008540 | S.ELE EEE1CA100SR | T | 68.8/100.4 |
| C283 | 4030017810 | S.CER C1608 CH 1H 102J-T | T | 82.1/36.3 |
| C284 | 4030006880 | S.CER C1608 JB 1H 472K-T | T | 84.5/34.3 |
| C285 | 4030017810 | S.CER C1608 CH 1H 102J-T | T | 82.1/48.8 |
| C286 | 4030006880 | S.CER C1608 JB 1H 472K-T | T | 84.5/46.9 |
| C287 | 4030017810 | S.CER C1608 CH 1H 102J-T | T | 82.1/61.3 |
| C288 | 4030006880 | S.CER C1608 JB 1H 472K-T | T | 83.9/57.5 |
| C289 | 4030017810 | S.CER C1608 CH 1H 102J-T | T | 82.1/73.8 |
| C290 | 4030006880 | S.CER C1608 JB 1H 472K-T | T | 84.3/70.4 |
| C291 | 4030017810 | S.CER C1608 CH 1H 102J-T | T | 82.1/86.3 |
| C292 | 4030006880 | S.CER C1608 JB 1H 472K-T | T | 84.4/84.4 |
| C293 | 4030017810 | S.CER C1608 CH 1H 102J-T | T | 82.1/98.7 |

M.=Mounted side (T: Mounted on the Top side, B: Mounted on the Bottom side)
S.=Surface mount

## [RXPLL-B UNIT]

| REF NO. | ORDER NO. | DESCRIPTION | M. | H/V LOCATION |
|---|---|---|---|---|
| C294 | 4030006880 | S.CER C1608 JB 1H 472K-T | T | 83.2/93.9 |
| C297 | 4030009920 | S.CER C1608 CH 1H 050B-T | T | 52.6/59.4 |
| C299 | 4030007050 | S.CER C1608 CH 1H 220J-T | T | 52.6/84.4 |
| C301 | 4030006880 | S.CER C1608 JB 1H 472K-T | T | 89.3/30.6 |
| C302 | 4030006880 | S.CER C1608 JB 1H 472K-T | T | 94.9/28 |
| C303 | 4030006880 | S.CER C1608 JB 1H 472K-T | B | 92.6/39.8 |
| C304 | 4030006880 | S.CER C1608 JB 1H 472K-T | B | 92.6/45.2 |
| C305 | 4030006880 | S.CER C1608 JB 1H 472K-T | B | 89.1/48.8 |
| C306 | 4030006880 | S.CER C1608 JB 1H 472K-T | B | 89.1/50.6 |
| C309 | 4030017810 | S.CER C1608 CH 1H 102J-T | T | 94.9/42.7 |
| C310 | 4030011600 | S.CER C1608 JB 1E 104K-T | T | 92.8/42.1 |
| C311 | 4510008520 | S.ELE EEE1CA470SP | T | 93.4/47.4 |
| C312 | 4030006880 | S.CER C1608 JB 1H 472K-T | B | 89/27.4 |
| C313 | 4030006880 | S.CER C1608 JB 1H 472K-T | B | 93.7/23.1 |
| C331 | 4030007110 | S.CER C1608 CH 1H 680J-T | T | 89.3/32.2 |
| C332 | 4030007160 | S.CER C1608 CH 1H 181J-T | T | 92.1/33.5 |
| C333 | 4030007110 | S.CER C1608 CH 1H 680J-T | T | 89.3/33.5 |
| C334 | 4030007050 | S.CER C1608 CH 1H 220J-T | T | 94.9/36 |
| C335 | 4030006980 | S.CER C1608 CH 1H 070D-T | T | 94.9/37.4 |
| C336 | 4030007030 | S.CER C1608 CH 1H 150J-T | T | 92.1/38.8 |
| C337 | 4030007050 | S.CER C1608 CH 1H 220J-T | T | 94.9/38.8 |
| C341 | 4030006880 | S.CER C1608 JB 1H 472K-T | T | 94.9/40.1 |
| C342 | 4030006880 | S.CER C1608 JB 1H 472K-T | T | 86.5/33.5 |
| C344 | 4030011600 | S.CER C1608 JB 1E 104K-T | T | 94.9/41.4 |
| C351 | 4030017810 | S.CER C1608 CH 1H 102J-T | T | 94.9/61.6 |
| C352 | 4030011600 | S.CER C1608 JB 1E 104K-T | T | 94.9/62.9 |
| C353 | 4510008520 | S.ELE EEE1CA470SP | T | 93.4/67.1 |
| C354 | 4030006880 | S.CER C1608 JB 1H 472K-T | T | 89.3/51.7 |
| C355 | 4030006880 | S.CER C1608 JB 1H 472K-T | T | 94.9/55.1 |
| C356 | 4030006880 | S.CER C1608 JB 1H 472K-T | T | 89.2/58.4 |
| C357 | 4030006880 | S.CER C1608 JB 1H 472K-T | T | 94.9/57.7 |
| C358 | 4030006880 | S.CER C1608 JB 1H 472K-T | B | 89.2/60.3 |
| C359 | 4030006880 | S.CER C1608 JB 1H 472K-T | B | 92.6/62.1 |
| C360 | 4030006880 | S.CER C1608 JB 1H 472K-T | B | 89.9/66.9 |
| C361 | 4030006880 | S.CER C1608 JB 1H 472K-T | T | 89.3/83.4 |
| C363 | 4030006880 | S.CER C1608 JB 1H 472K-T | T | 86.1/60.9 |
| C364 | 4030017810 | S.CER C1608 CH 1H 102J-T | T | 86.7/52.3 |
| C365 | 4030006880 | S.CER C1608 JB 1H 472K-T | T | 90.3/59.9 |
| C421 | 4030006880 | S.CER C1608 JB 1H 472K-T | T | 94.1/88.5 |
| C423 | 4030006880 | S.CER C1608 JB 1H 472K-T | T | 94.1/93.3 |
| C426 | 4030006880 | S.CER C1608 JB 1H 472K-T | B | 94.6/87.3 |
| C427 | 4030006880 | S.CER C1608 JB 1H 472K-T | T | 92.1/86.5 |
| C441 | 4030007040 | S.CER C1608 CH 1H 180J-T | T | 94.9/71.3 |
| C442 | 4030007040 | S.CER C1608 CH 1H 180J-T | T | 94.9/72.6 |
| C443 | 4030007020 | S.CER C1608 CH 1H 120J-T | T | 92.1/74.2 |
| C444 | 4030007080 | S.CER C1608 CH 1H 390J-T | T | 94.9/73.9 |
| C445 | 4030011770 | S.CER C1608 CH 1H 060B-T | T | 94.9/75.2 |
| C446 | 4030007060 | S.CER C1608 CH 1H 270J-T | T | 94.9/79.1 |
| C447 | 4030007110 | S.CER C1608 CH 1H 680J-T | T | 92.8/78.9 |
| C448 | 4030006880 | S.CER C1608 JB 1H 472K-T | T | 94.9/76.5 |
| C449 | 4030006880 | S.CER C1608 JB 1H 472K-T | T | 88.1/69.1 |
| C451 | 4030007110 | S.CER C1608 CH 1H 680J-T | T | 92/82.1 |
| C452 | 4030007160 | S.CER C1608 CH 1H 181J-T | T | 92/80.8 |
| C453 | 4030011600 | S.CER C1608 JB 1E 104K-T | T | 94.9/77.8 |
| C501 | 4030006880 | S.CER C1608 JB 1H 472K-T | T | 38.9/131.2 |
| C502 | 4030011600 | S.CER C1608 JB 1E 104K-T | T | 38.9/129.9 |
| C503 | 4510008540 | S.ELE EEE1CA100SR | T | 36.6/126.7 |
| C504 | 4030011600 | S.CER C1608 JB 1E 104K-T | T | 21.4/153.1 |
| C505 | 4550007470 | S.TAN F931A107MNMBMA | B | 19.2/140.3 |
| C506 | 4030011600 | S.CER C1608 JB 1E 104K-T | T | 21.4/141 |
| C507 | 4030011600 | S.CER C1608 JB 1E 104K-T | T | 21.4/137.1 |
| C509 | 4030011600 | S.CER C1608 JB 1E 104K-T | T | 25.8/132.6 |
| C510 | 4030011600 | S.CER C1608 JB 1E 104K-T | T | 28.4/132.6 |
| C511 | 4030011600 | S.CER C1608 JB 1E 104K-T | T | 32.2/132.6 |
| C512 | 4030011600 | S.CER C1608 JB 1E 104K-T | T | 34.8/132.6 |
| C513 | 4030011600 | S.CER C1608 JB 1E 104K-T | T | 37.4/132.6 |
| C514 | 4030011600 | S.CER C1608 JB 1E 104K-T | T | 41.2/136 |
| C515 | 4030011600 | S.CER C1608 JB 1E 104K-T | T | 41.3/139.7 |
| C516 | 4030011600 | S.CER C1608 JB 1E 104K-T | T | 41.3/142.3 |
| C517 | 4030011600 | S.CER C1608 JB 1E 104K-T | T | 37.6/151.8 |
| C518 | 4030011600 | S.CER C1608 JB 1E 104K-T | T | 34.8/151.8 |
| C519 | 4030011600 | S.CER C1608 JB 1E 104K-T | T | 31.2/151.8 |
| C520 | 4030011600 | S.CER C1608 JB 1E 104K-T | T | 23.3/151.9 |
| C521 | 4030011600 | S.CER C1608 JB 1E 104K-T | T | 41.6/134 |
| C522 | 4550007220 | S.TAN F931A476MCMBMA | B | 40.7/145 |
| C525 | 4030006880 | S.CER C1608 JB 1H 472K-T | T | 35.3/154.5 |
| C526 | 4030011600 | S.CER C1608 JB 1E 104K-T | T | 36.6/154.5 |
| C531 | 4030006880 | S.CER C1608 JB 1H 472K-T | T | 14.6/137.5 |
| C532 | 4030007070 | S.CER C1608 CH 1H 330J-T | T | 17.2/137.5 |
| C533 | 4030007110 | S.CER C1608 CH 1H 680J-T | T | 17.3/133.4 |
| C534 | 4030007110 | S.CER C1608 CH 1H 680J-T | T | 16.8/130.1 |
| C535 | 4030007070 | S.CER C1608 CH 1H 330J-T | T | 18.1/127 |
| C536 | 4030006880 | S.CER C1608 JB 1H 472K-T | T | 20.9/127.6 |
| C537 | 4030006880 | S.CER C1608 JB 1H 472K-T | T | 27.2/126.4 |
| C540 | 4030006880 | S.CER C1608 JB 1H 472K-T | B | 56.3/142.8 |
| C541 | 4510008540 | S.ELE EEE1CA100SR | T | 51/139.3 |
| C542 | 4340000260 | S.MLR ECPU1C104MA5 | B | 47.8/128.7 |
| C543 | 4030007060 | S.CER C1608 CH 1H 270J-T | T | 62.2/136.4 |
| C545 | 4030008560 | S.CER C1608 CH 1H 300J-T | T | 70/137.1 |
| C546 | 4610001830 | S.TRI TZB4S100AB10R00 | T | 65.8/138.7 |
| C547 | 4030007130 | S.CER C1608 CH 1H 101J-T | T | 71.3/137.1 |
| C548 | 4030007010 | S.CER C1608 CH 1H 100D-T | T | 71.3/139.9 |
| C549 | 4030007050 | S.CER C1608 CH 1H 220J-T | T | 68.9/145.1 |
| C550 | 4030006880 | S.CER C1608 JB 1H 472K-T | T | 66.3/143 |
| C551 | 4030009520 | S.CER C1608 CH 1H 020B-T | T | 71.3/142.8 |
| C552 | 4030017810 | S.CER C1608 CH 1H 102J-T | B | 54.6/139.5 |
| C553 | 4030006880 | S.CER C1608 JB 1H 472K-T | B | 56.3/139.5 |
| C554 | 4510008500 | S.ELE EEE1CA101WP | T | 50.9/146.6 |
| C555 | 4030006880 | S.CER C1608 JB 1H 472K-T | B | 47.7/149.5 |
| C556 | 4550007220 | S.TAN F931A476MCMBMA | B | 76.4/136.1 |
| C558 | 4550007520 | S.TAN F931A106MAABMA | B | 43.4/132.5 |
| C559 | 4550007400 | S.TAN F931A225MAABMA | B | 43.4/129.9 |
| C561 | 4550007520 | S.TAN F931A106MAABMA | T | 70/157.5 |
| C562 | 4030006880 | S.CER C1608 JB 1H 472K-T | T | 68.3/155.5 |

## [RXPLL-B UNIT]

| REF NO. | ORDER NO. | DESCRIPTION | M. | H/V LOCATION |
|---|---|---|---|---|
| C563 | 4030017810 | S.CER C1608 CH 1H 102J-T | B | 60.1/158 |
| C564 | 4030006880 | S.CER C1608 JB 1H 472K-T | B | 58.8/158 |
| C565 | 4510008520 | S.ELE EEE1CA470SP | T | 50.9/155.6 |
| C566 | 4030006880 | S.CER C1608 JB 1H 472K-T | T | 64.4/155.5 |
| C571 | 4030006880 | S.CER C1608 JB 1H 472K-T | B | 58.5/161.3 |
| C573 | 4030007040 | S.CER C1608 CH 1H 180J-T | B | 72.5/166.8 |
| C574 | 4030009510 | S.CER C1608 CH 1H 010B-T | T | 72.6/169.1 |
| C575 | 4030007040 | S.CER C1608 CH 1H 180J-T | T | 72.6/171.9 |
| C580 | 4030006880 | S.CER C1608 JB 1H 472K-T | T | 41.9/152.4 |
| C581 | 4030006880 | S.CER C1608 JB 1H 472K-T | T | 41.9/144.2 |
| C591 | 4030006880 | S.CER C1608 JB 1H 472K-T | T | 63.5/171.2 |
| C592 | 4030007060 | S.CER C1608 CH 1H 270J-T | T | 62.8/163.1 |
| C593 | 4510008540 | S.ELE EEE1CA100SR | T | 54.4/170.7 |
| C594 | 4030006880 | S.CER C1608 JB 1H 472K-T | T | 57.4/171.9 |
| C596 | 4030006880 | S.CER C1608 JB 1H 472K-T | B | 63.7/168.1 |
| C597 | 4030007050 | S.CER C1608 CH 1H 220J-T | T | 62.2/171.2 |
| C601 | 4030006880 | S.CER C1608 JB 1H 472K-T | T | 47.3/116.4 |
| C602 | 4030006880 | S.CER C1608 JB 1H 472K-T | T | 49.5/121.4 |
| C607 | 4030006880 | S.CER C1608 JB 1H 472K-T | T | 51.2/115.4 |
| C608 | 4030006880 | S.CER C1608 JB 1H 472K-T | T | 53.2/115.9 |
| C609 | 4030007100 | S.CER C1608 CH 1H 560J-T | T | 53.2/114.6 |
| C610 | 4030008750 | S.CER C1608 CH 1H 360J-T | T | 55.2/115.4 |
| C611 | 4030007140 | S.CER C1608 CH 1H 121J-T | T | 56.3/113.5 |
| C612 | 4030007020 | S.CER C1608 CH 1H 120J-T | T | 57.1/114.8 |
| C613 | 4030007110 | S.CER C1608 CH 1H 680J-T | T | 56.3/112.2 |
| C651 | 4030006880 | S.CER C1608 JB 1H 472K-T | T | 13.5/174 |
| C652 | 4030011600 | S.CER C1608 JB 1E 104K-T | T | 12.9/176.3 |
| C653 | 4510008540 | S.ELE EEE1CA100SR | T | 6.8/172.6 |
| C654 | 4030011600 | S.CER C1608 JB 1E 104K-T | T | 22.8/161.4 |
| C655 | 4030011600 | S.CER C1608 JB 1E 104K-T | T | 25.9/161.4 |
| C656 | 4030011600 | S.CER C1608 JB 1E 104K-T | T | 25.8/177.1 |
| C657 | 4030011600 | S.CER C1608 JB 1E 104K-T | T | 22.7/177.1 |
| C658 | 4030011600 | S.CER C1608 JB 1E 104K-T | T | 13.5/172.7 |
| C659 | 4030011600 | S.CER C1608 JB 1E 104K-T | T | 16.5/163.4 |
| C660 | 4030006880 | S.CER C1608 JB 1H 472K-T | T | 17.6/161.4 |
| C661 | 4030011600 | S.CER C1608 JB 1E 104K-T | T | 13.5/166.9 |
| C662 | 4550007220 | S.TAN F931A476MCMBMA | B | 30.5/169.4 |
| C680 | 4030006880 | S.CER C1608 JB 1H 472K-T | T | 34.3/177.1 |
| C681 | 4030007160 | S.CER C1608 CH 1H 181J-T | T | 40.3/177.1 |
| C682 | 4030007140 | S.CER C1608 CH 1H 121J-T | T | 39.6/175.2 |
| C683 | 4030011330 | S.CER C1608 CH 1H 391J-T | T | 40.9/175.2 |
| C684 | 4030007080 | S.CER C1608 CH 1H 390J-T | B | 39.3/174 |
| C685 | 4030011280 | S.CER C1608 CH 1H 271J-T | B | 42.3/172.6 |
| C686 | 4030010760 | S.CER C1608 CH 1H 331J-T | B | 39.3/170.6 |
| C687 | 4030018580 | S.CER C1608 CH 1H 821J-T | T | 41/169.7 |
| C688 | 4030010760 | S.CER C1608 CH 1H 331J-T | B | 37.5/169.7 |
| C689 | 4030011600 | S.CER C1608 JB 1E 104K-T | T | 37.4/166.4 |
| C690 | 4030011600 | S.CER C1608 JB 1E 104K-T | T | 37.4/161.3 |
| C691 | 4030011600 | S.CER C1608 JB 1E 104K-T | T | 46.4/164 |
| C692 | 4030006880 | S.CER C1608 JB 1H 472K-T | T | 40.3/162.1 |
| C693 | 4030006880 | S.CER C1608 JB 1H 472K-T | B | 58.4/169.6 |
| C694 | 4030006880 | S.CER C1608 JB 1H 472K-T | B | 58.4/164.2 |
| C703 | 4030017810 | S.CER C1608 CH 1H 102J-T | T | 24.3/116.6 |
| C704 | 4030006880 | S.CER C1608 JB 1H 472K-T | T | 23/116.6 |
| C705 | 4510008500 | S.ELE EEE1CA101WP | T | 29.4/118.7 |
| C707 | 4030011600 | S.CER C1608 JB 1E 104K-T | T | 32.1/113.7 |
| C708 | 4030011600 | S.CER C1608 JB 1E 104K-T | T | 32.1/108.1 |
| C709 | 4030007070 | S.CER C1608 CH 1H 330J-T | T | 38.8/112.9 |
| C710 | 4030006880 | S.CER C1608 JB 1H 472K-T | T | 36.2/112.9 |
| C711 | 4030009540 | S.CER C1608 CH 1H 1R5B-T | B | 39.3/113.6 |
| C712 | 4030007070 | S.CER C1608 CH 1H 330J-T | T | 36.2/114.2 |
| C713 | 4030006880 | S.CER C1608 JB 1H 472K-T | T | 42/118.8 |
| C1000 | 4030007050 | S.CER C1608 CH 1H 220J-T | B | 177.1/13.8 |
| C1002 | 4030006880 | S.CER C1608 JB 1H 472K-T | B | 153.1/16.2 |
| C1003 | 4030012600 | S.CER C2012 JB 1A 105M-T | T | 157.4/8.2 |
| C1004 | 4030011600 | S.CER C1608 JB 1E 104K-T | B | 169.6/8.7 |
| C1005 | 4030011600 | S.CER C1608 JB 1E 104K-T | T | 162.8/17.2 |
| C1006 | 4030010210 | S.CER C3216 JB 1C 105M-T | T | 173.8/18.6 |
| C1007 | 4030006880 | S.CER C1608 JB 1H 472K-T | T | 172.4/23.9 |
| C1008 | 4030006880 | S.CER C1608 JB 1H 472K-T | T | 160/24 |
| C1009 | 4030006880 | S.CER C1608 JB 1H 472K-T | T | 147.6/23.8 |
| C1010 | 4030012600 | S.CER C2012 JB 1A 105M-T | T | 154.5/28.9 |
| C1011 | 4030012600 | S.CER C2012 JB 1A 105M-T | T | 144.2/29.3 |
| C1012 | 4030010210 | S.CER C3216 JB 1C 105M-T | T | 144.8/40.2 |
| C1013 | 4030012600 | S.CER C2012 JB 1A 105M-T | T | 144.2/33.2 |
| C1014 | 4030018810 | S.CER C3216 CH 1H 333J-T | B | 151.6/48.3 |
| C1015 | 4030012600 | S.CER C2012 JB 1A 105M-T | T | 163.6/13.8 |
| C1016 | 4030012600 | S.CER C2012 JB 1A 105M-T | T | 173.6/33.2 |
| C1017 | 4030012600 | S.CER C2012 JB 1A 105M-T | T | 163.3/33.2 |
| C1020 | 4030012600 | S.CER C2012 JB 1A 105M-T | B | 170/38.6 |
| C1021 | 4030012600 | S.CER C2012 JB 1A 105M-T | B | 154/38.6 |
| C1024 | 4030010210 | S.CER C3216 JB 1C 105M-T | B | 170.5/45.5 |
| C1025 | 4030010210 | S.CER C3216 JB 1C 105M-T | B | 154.7/45.5 |
| C1026 | 4030010210 | S.CER C3216 JB 1C 105M-T | T | 171.4/52.7 |
| C1027 | 4030010210 | S.CER C3216 JB 1C 105M-T | T | 165.6/52.7 |
| C1028 | 4030006880 | S.CER C1608 JB 1H 472K-T | B | 156.4/65.4 |
| C1029 | 4030006880 | S.CER C1608 JB 1H 472K-T | T | 168.5/65.4 |
| C1030 | 4030010210 | S.CER C3216 JB 1C 105M-T | T | 164.5/18 |
| C1031 | 4030012600 | S.CER C2012 JB 1A 105M-T | B | 169.2/10.8 |
| C1033 | 4550006470 | S.TAN TEESVB2 1D 106M8R | B | 146.5/47.7 |
| C1034 | 4550006470 | S.TAN TEESVB2 1D 106M8R | B | 174/52.1 |
| C1035 | 4550006470 | S.TAN TEESVB2 1D 106M8R | B | 164.6/15.8 |
| C1036 | 4030007120 | S.CER C1608 CH 1H 820J-T | T | 160.2/12.7 |
| C1037 | 4030007090 | S.CER C1608 CH 1H 470J-T | B | 149.3/49.3 |
| C1038 | 4030017810 | S.CER C1608 CH 1H 102J-T | T | 146.6/26.2 |
| C1039 | 4030017810 | S.CER C1608 CH 1H 102J-T | T | 146.5/41 |
| C1040 | 4030017810 | S.CER C1608 CH 1H 102J-T | T | 145.3/36.4 |
| C1041 | 4030006990 | S.CER C1608 CH 1H 080D-T | B | 153.4/31 |
| C1046 | 4030007010 | S.CER C1608 CH 1H 100D-T | B | 168.4/53.7 |
| C1048 | 4030006880 | S.CER C1608 JB 1H 472K-T | B | 170.6/41.6 |
| C1049 | 4030006880 | S.CER C1608 JB 1H 472K-T | B | 154.6/41.6 |
| C1050 | 4030017810 | S.CER C1608 CH 1H 102J-T | B | 170.5/49.5 |
| C1051 | 4030017810 | S.CER C1608 CH 1H 102J-T | B | 154.7/49.4 |
| C1052 | 4030007060 | S.CER C1608 CH 1H 270J-T | B | 164.1/29.6 |

M.=Mounted side (T: Mounted on the Top side, B: Mounted on the Bottom side)
S.=Surface mount

## [RXPLL-B UNIT]

| REF NO. | ORDER NO. | DESCRIPTION | M. | H/V LOCATION |
|---|---|---|---|---|
| C1053 | 4030007110 | S.CER C1608 CH 1H 680J-T | T | 175.2/77.3 |
| C1054 | 4030007010 | S.CER C1608 CH 1H 100D-T | B | 175.7/72.4 |
| C1055 | 4030007140 | S.CER C1608 CH 1H 121J-T | B | 175.7/74.2 |
| C1056 | 4030007050 | S.CER C1608 CH 1H 220J-T | T | 175.2/76 |
| C1057 | 4030007130 | S.CER C1608 CH 1H 101J-T | T | 172.1/77.1 |
| C1058 | 4030009920 | S.CER C1608 CH 1H 050B-T | B | 173.2/12.7 |
| C1060 | 4030017810 | S.CER C1608 CH 1H 102J-T | T | 178.6/94.4 |
| C1061 | 4030007090 | S.CER C1608 CH 1H 470J-T | B | 147.7/91.8 |
| C1062 | 4030007170 | S.CER C1608 CH 1H 221J-T | B | 149.5/91.8 |
| C1064 | 4030007090 | S.CER C1608 CH 1H 470J-T | T | 148.7/80.1 |
| C1066 | 4030007010 | S.CER C1608 CH 1H 100D-T | T | 138.6/81.9 |
| C1067 | 4030007010 | S.CER C1608 CH 1H 100D-T | T | 173.4/77.1 |
| C1070 | 4030006980 | S.CER C1608 CH 1H 070D-T | T | 137.2/81.9 |
| C1071 | 4030007100 | S.CER C1608 CH 1H 560J-T | B | 162.2/75.3 |
| C1072 | 4030007170 | S.CER C1608 CH 1H 221J-T | B | 162/78.7 |
| C1073 | 4030007080 | S.CER C1608 CH 1H 390J-T | B | 164.1/76.4 |
| C1074 | 4030007060 | S.CER C1608 CH 1H 270J-T | T | 148.7/78.6 |
| C1081 | 4030006900 | S.CER C1608 JB 1H 103K-T | B | 156.1/86 |
| C1082 | 4030006900 | S.CER C1608 JB 1H 103K-T | B | 151.3/91.8 |
| C1083 | 4030006900 | S.CER C1608 JB 1H 103K-T | B | 151.2/81.6 |
| C1084 | 4030006880 | S.CER C1608 JB 1H 472K-T | B | 149.4/81.6 |
| C1085 | 4030006880 | S.CER C1608 JB 1H 472K-T | B | 153/81.6 |
| C1091 | 4030006880 | S.CER C1608 JB 1H 472K-T | T | 149.3/149.4 |
| C1092 | 4030006880 | S.CER C1608 JB 1H 472K-T | T | 147/138.5 |
| C1093 | 4030006880 | S.CER C1608 JB 1H 472K-T | T | 161.3/135.8 |
| C1101 | 4030006900 | S.CER C1608 JB 1H 103K-T | T | 177/90.9 |
| C1102 | 4030006900 | S.CER C1608 JB 1H 103K-T | T | 175.4/115.5 |
| C1103 | 4030011600 | S.CER C1608 JB 1E 104K-T | T | 179.6/116.4 |
| C1104 | 4030011600 | S.CER C1608 JB 1E 104K-T | T | 175.4/87.7 |
| C1106 | 4030011600 | S.CER C1608 JB 1E 104K-T | T | 179.3/128.8 |
| C1107 | 4030011600 | S.CER C1608 JB 1E 104K-T | B | 172.3/124.2 |
| C1109 | 4030007090 | S.CER C1608 CH 1H 470J-T | T | 175.7/137.9 |
| C1110 | 4030006900 | S.CER C1608 JB 1H 103K-T | T | 175.7/136.6 |
| C1111 | 4030011600 | S.CER C1608 JB 1E 104K-T | T | 176.7/132 |
| C1112 | 4030006900 | S.CER C1608 JB 1H 103K-T | T | 179.3/132 |
| C1113 | 4030007090 | S.CER C1608 CH 1H 470J-T | T | 178.6/140.9 |
| C1114 | 4030006900 | S.CER C1608 JB 1H 103K-T | B | 178.4/138 |
| C1115 | 4030011600 | S.CER C1608 JB 1E 104K-T | T | 175.7/140 |
| C1116 | 4030006900 | S.CER C1608 JB 1H 103K-T | T | 165.7/138.7 |
| C1117 | 4030007010 | S.CER C1608 CH 1H 100D-T | T | 169.7/142.2 |
| C1118 | 4030011600 | S.CER C1608 JB 1E 104K-T | T | 171/142.2 |
| C1119 | 4030006880 | S.CER C1608 JB 1H 472K-T | T | 171.9/146.6 |
| C1120 | 4030006880 | S.CER C1608 JB 1H 472K-T | T | 171.9/148.4 |
| C1121 | 4030011600 | S.CER C1608 JB 1E 104K-T | T | 180.6/147.7 |
| C1122 | 4030009530 | S.CER C1608 CH 1H 030B-T | T | 178.2/120.3 |
| C1123 | 4030006900 | S.CER C1608 JB 1H 103K-T | T | 182.1/100.9 |
| C1124 | 4030006900 | S.CER C1608 JB 1H 103K-T | T | 175.3/105.9 |
| C1125 | 4030006900 | S.CER C1608 JB 1H 103K-T | T | 175.5/85.1 |
| C1126 | 4030011600 | S.CER C1608 JB 1E 104K-T | T | 173.4/131.1 |
| C1151 | 4030007110 | S.CER C1608 CH 1H 680J-T | B | 123.1/64 |
| C1152 | 4030007110 | S.CER C1608 CH 1H 680J-T | B | 123.1/57 |
| C1153 | 4030017810 | S.CER C1608 CH 1H 102J-T | T | 131.5/63.9 |
| C1201 | 4030007110 | S.CER C1608 CH 1H 680J-T | B | 120.2/21.8 |
| C1202 | 4030007110 | S.CER C1608 CH 1H 680J-T | B | 118.4/21.8 |
| C1207 | 4030006880 | S.CER C1608 JB 1H 472K-T | B | 123/11.8 |
| C1226 | 4030009500 | S.CER C1608 CH 1H 0R5B-T | B | 124.9/35.6 |
| C1227 | 4030009500 | S.CER C1608 CH 1H 0R5B-T | B | 115.4/35.6 |
| C1228 | 4030009920 | S.CER C1608 CH 1H 050B-T | B | 113.9/41.8 |
| C1231 | 4030006900 | S.CER C1608 JB 1H 103K-T | T | 118.9/21.5 |
| C1232 | 4030006900 | S.CER C1608 JB 1H 103K-T | T | 109/21.5 |
| C1234 | 4030006900 | S.CER C1608 JB 1H 103K-T | B | 123.5/38.3 |
| C1235 | 4030006880 | S.CER C1608 JB 1H 472K-T | B | 116.6/32.1 |
| C1236 | 4030006900 | S.CER C1608 JB 1H 103K-T | T | 119.8/40 |
| C1238 | 4030006900 | S.CER C1608 JB 1H 103K-T | B | 114/38.3 |
| C1239 | 4030006880 | S.CER C1608 JB 1H 472K-T | B | 106.8/32.3 |
| C1240 | 4030006900 | S.CER C1608 JB 1H 103K-T | T | 111.7/40.5 |
| C1241 | 4030006900 | S.CER C1608 JB 1H 103K-T | T | 113.6/38.6 |
| C1243 | 4030006880 | S.CER C1608 JB 1H 472K-T | B | 129.6/46.7 |
| C1244 | 4030007080 | S.CER C1608 CH 1H 390J-T | T | 149.6/67 |
| C1245 | 4030007130 | S.CER C1608 CH 1H 101J-T | T | 151/64.4 |
| C1246 | 4030007120 | S.CER C1608 CH 1H 820J-T | T | 150.9/67 |
| C1247 | 4030007090 | S.CER C1608 CH 1H 470J-T | T | 153.4/63.5 |
| C1248 | 4030007130 | S.CER C1608 CH 1H 101J-T | T | 153.4/66.8 |
| C1249 | 4030007020 | S.CER C1608 CH 1H 120J-T | T | 153.1/70.3 |
| C1250 | 4030007100 | S.CER C1608 CH 1H 560J-T | B | 152.4/74.3 |
| C1251 | 4030006900 | S.CER C1608 JB 1H 103K-T | T | 160.2/92.9 |
| C1252 | 4030006900 | S.CER C1608 JB 1H 103K-T | T | 152.7/92.9 |
| C1253 | 4030006900 | S.CER C1608 JB 1H 103K-T | B | 152.5/111.2 |
| C1255 | 4030017810 | S.CER C1608 CH 1H 102J-T | B | 155.7/99.3 |
| C1256 | 4030007010 | S.CER C1608 CH 1H 100D-T | T | 156.3/98.8 |
| C1257 | 4030011600 | S.CER C1608 JB 1E 104K-T | B | 155.7/103 |
| C1258 | 4030007080 | S.CER C1608 CH 1H 390J-T | B | 152/97.5 |
| C1264 | 4030007110 | S.CER C1608 CH 1H 680J-T | T | 122/51.1 |
| C1265 | 4610001830 | S.TRI TZB4S100AB10R00 | T | 163.8/70.8 |
| C1266 | 4030007020 | S.CER C1608 CH 1H 120J-T | T | 160.1/74.5 |
| C1267 | 4030006880 | S.CER C1608 JB 1H 472K-T | B | 157/126.4 |
| C1268 | 4030006980 | S.CER C1608 CH 1H 070D-T | T | 149.6/64.4 |
| C1302 | 4030007060 | S.CER C1608 CH 1H 270J-T | T | 159.3/111 |
| C1303 | 4030006980 | S.CER C1608 CH 1H 070D-T | T | 159.3/112.9 |
| C1304 | 4030007070 | S.CER C1608 CH 1H 330J-T | T | 159.3/114.2 |
| C1305 | 4030007010 | S.CER C1608 CH 1H 100D-T | T | 153.5/114.6 |
| C1306 | 4030009650 | S.CER C1608 CH 1H 240J-T | T | 159.3/115.5 |
| C1307 | 4030007030 | S.CER C1608 CH 1H 150J-T | T | 153.5/120.2 |
| C1308 | 4030006900 | S.CER C1608 JB 1H 103K-T | T | 155.1/127.1 |
| C1309 | 4030007080 | S.CER C1608 CH 1H 390J-T | T | 156.5/125.8 |
| C1310 | 4030007080 | S.CER C1608 CH 1H 390J-T | T | 159.1/128.4 |
| C1311 | 4030006900 | S.CER C1608 JB 1H 103K-T | B | 149/118.9 |
| C1312 | 4030007060 | S.CER C1608 CH 1H 270J-T | T | 155.5/111.7 |
| C1313 | 4030007060 | S.CER C1608 CH 1H 270J-T | T | 159.1/127.1 |
| C1355 | 4030006880 | S.CER C1608 JB 1H 472K-T | T | 144.7/70 |
| C1357 | 4030007000 | S.CER C1608 CH 1H 090D-T | B | 144.6/67.1 |
| C1358 | 4030011600 | S.CER C1608 JB 1E 104K-T | B | 139.1/70.4 |
| C1360 | 4030011600 | S.CER C1608 JB 1E 104K-T | B | 146.4/70.4 |
| C1361 | 4030007020 | S.CER C1608 CH 1H 120J-T | B | 137.7/69.5 |

## [RXPLL-B UNIT]

| REF NO. | ORDER NO. | DESCRIPTION | M. | H/V LOCATION |
|---|---|---|---|---|
| C1362 | 4030011600 | S.CER C1608 JB 1E 104K-T | T | 137.5/65.6 |
| C1403 | 4030017810 | S.CER C1608 CH 1H 102J-T | T | 114.7/70.3 |
| C1404 | 4030017810 | S.CER C1608 CH 1H 102J-T | T | 116.3/104.8 |
| C1405 | 4030006900 | S.CER C1608 JB 1H 103K-T | B | 115.9/63.9 |
| C1406 | 4030017810 | S.CER C1608 CH 1H 102J-T | T | 114.2/66.2 |
| C1407 | 4030017810 | S.CER C1608 CH 1H 102J-T | T | 119.9/70.3 |
| C1408 | 4030006900 | S.CER C1608 JB 1H 103K-T | T | 116.3/73 |
| C1409 | 4030006900 | S.CER C1608 JB 1H 103K-T | T | 114.4/68.1 |
| C1410 | 4030007030 | S.CER C1608 CH 1H 150J-T | T | 116.3/83.3 |
| C1411 | 4030006990 | S.CER C1608 CH 1H 080D-T | T | 112.2/87.8 |
| C1412 | 4030007030 | S.CER C1608 CH 1H 150J-T | T | 116.3/93.7 |
| C1413 | 4030007020 | S.CER C1608 CH 1H 120J-T | T | 107/83.3 |
| C1414 | 4030006990 | S.CER C1608 CH 1H 080D-T | T | 103.6/86.6 |
| C1415 | 4030007020 | S.CER C1608 CH 1H 120J-T | T | 107/93.7 |
| C1416 | 4030006900 | S.CER C1608 JB 1H 103K-T | T | 113.2/103.4 |
| C1417 | 4030006900 | S.CER C1608 JB 1H 103K-T | T | 110.5/107.6 |
| C1418 | 4030017810 | S.CER C1608 CH 1H 102J-T | T | 110.4/105.8 |
| C1419 | 4030017810 | S.CER C1608 CH 1H 102J-T | T | 111/108.9 |
| C1420 | 4030007120 | S.CER C1608 CH 1H 820J-T | B | 113.2/114.2 |
| C1421 | 4030007150 | S.CER C1608 CH 1H 151J-T | B | 115/114.2 |
| C1423 | 4030010750 | S.CER C1608 CH 1H 201J-T | B | 120.3/111.1 |
| C1424 | 4030007010 | S.CER C1608 CH 1H 100D-T | T | 132.8/103.3 |
| C1425 | 4030011600 | S.CER C1608 JB 1E 104K-T | T | 136.5/106.2 |
| C1426 | 4030011600 | S.CER C1608 JB 1E 104K-T | T | 137.8/106.2 |
| C1427 | 4030006900 | S.CER C1608 JB 1H 103K-T | T | 133.9/106.2 |
| C1428 | 4030006980 | S.CER C1608 CH 1H 070D-T | T | 119.5/109 |
| C1429 | 4030006900 | S.CER C1608 JB 1H 103K-T | T | 120.5/113.6 |
| C1430 | 4030007040 | S.CER C1608 CH 1H 180J-T | B | 131.9/115.3 |
| C1431 | 4030017810 | S.CER C1608 CH 1H 102J-T | T | 127/116.2 |
| C1432 | 4030009980 | S.CER C1608 JB 1H 152K-T | T | 129.1/114.1 |
| C1433 | 4030011600 | S.CER C1608 JB 1E 104K-T | T | 130.4/114.1 |
| C1434 | 4030009920 | S.CER C1608 CH 1H 050B-T | B | 124.7/134.4 |
| C1435 | 4030009920 | S.CER C1608 CH 1H 050B-T | B | 124.7/131.6 |
| C1436 | 4030011600 | S.CER C1608 JB 1E 104K-T | B | 137.2/122.2 |
| C1437 | 4030009920 | S.CER C1608 CH 1H 050B-T | T | 104/83.3 |
| C1438 | 4030009920 | S.CER C1608 CH 1H 050B-T | T | 102.3/86.6 |
| C1439 | 4030009920 | S.CER C1608 CH 1H 050B-T | T | 110/93.7 |
| C1441 | 4030006880 | S.CER C1608 JB 1H 472K-T | T | 120.5/116.2 |
| C1451 | 4030007020 | S.CER C1608 CH 1H 120J-T | T | 125.5/80.1 |
| C1453 | 4030007030 | S.CER C1608 CH 1H 150J-T | T | 122.1/85.1 |
| C1454 | 4030007030 | S.CER C1608 CH 1H 150J-T | T | 120.8/85.1 |
| C1456 | 4030007020 | S.CER C1608 CH 1H 120J-T | T | 125.5/90.9 |
| C1457 | 4030006900 | S.CER C1608 JB 1H 103K-T | T | 118.3/72.9 |
| C1458 | 4030006900 | S.CER C1608 JB 1H 103K-T | T | 116.6/103.5 |
| C1501 | 4030018530 | S.CER C3216 CH 1H 103J-T | T | 131.2/124.5 |
| C1502 | 4550003220 | S.TAN TEESVA 1E 105M8R | T | 132.1/139.2 |
| C1503 | 4030006900 | S.CER C1608 JB 1H 103K-T | T | 137/142.1 |
| C1504 | 4030012610 | S.CER C2012 JB 1C 474K-T | T | 136.7/140.5 |
| C1505 | 4030007010 | S.CER C1608 CH 1H 100D-T | T | 130/143.5 |
| C1506 | 4030010760 | S.CER C1608 CH 1H 331J-T | T | 131.3/146.3 |
| C1507 | 4510008540 | S.ELE EEE1CA100SR | T | 142.6/140.8 |
| C1508 | 4030011600 | S.CER C1608 JB 1E 104K-T | B | 128.8/148.8 |
| C1509 | 4030018800 | S.CER C3216 CH 1H 223J-T | T | 135.8/145.1 |
| C1510 | 4030007110 | S.CER C1608 CH 1H 680J-T | T | 136.5/158.9 |
| C1511 | 4510008540 | S.ELE EEE1CA100SR | T | 132.7/150.6 |
| C1512 | 4030011600 | S.CER C1608 JB 1E 104K-T | T | 129.6/149 |
| C1513 | 4030011600 | S.CER C1608 JB 1E 104K-T | T | 129.6/158.1 |
| C1514 | 4510008540 | S.ELE EEE1CA100SR | T | 132.7/156.5 |
| C1515 | 4030007160 | S.CER C1608 CH 1H 181J-T | T | 132.2/160.8 |
| C1516 | 4030009350 | S.CER C1608 CH 1H 3R5B-T | T | 130.9/160.8 |
| C1517 | 4030007110 | S.CER C1608 CH 1H 680J-T | T | 115.3/155 |
| C1518 | 4030018530 | S.CER C3216 CH 1H 103J-T | T | 131.2/132.8 |
| C1519 | 4550003220 | S.TAN TEESVA 1E 105M8R | T | 122.9/140.9 |
| C1520 | 4030006900 | S.CER C1608 JB 1H 103K-T | T | 119.8/140.7 |
| C1521 | 4030012610 | S.CER C2012 JB 1C 474K-T | T | 116.2/142.1 |
| C1522 | 4030007010 | S.CER C1608 CH 1H 100D-T | T | 123.7/143.5 |
| C1523 | 4030010760 | S.CER C1608 CH 1H 331J-T | T | 122.4/146.3 |
| C1524 | 4030018800 | S.CER C3216 CH 1H 223J-T | T | 117.9/145.2 |
| C1525 | 4510008540 | S.ELE EEE1CA100SR | T | 124.9/150.6 |
| C1526 | 4030011600 | S.CER C1608 JB 1E 104K-T | T | 128/149 |
| C1527 | 4030011600 | S.CER C1608 JB 1E 104K-T | T | 128/158.1 |
| C1528 | 4510008540 | S.ELE EEE1CA100SR | T | 124.9/156.5 |
| C1529 | 4030017870 | S.CER C1608 CH 1H 681J-T | T | 125.4/160.8 |
| C1530 | 4030011330 | S.CER C1608 CH 1H 391J-T | T | 126.7/160.8 |
| C1531 | 4510008500 | S.ELE EEE1CA101WP | T | 111.3/167.3 |
| C1532 | 4030011600 | S.CER C1608 JB 1E 104K-T | T | 107.1/167.3 |
| C1533 | 4030011600 | S.CER C1608 JB 1E 104K-T | T | 115.5/167.3 |
| C1534 | 4510008500 | S.ELE EEE1CA101WP | T | 119.7/167.3 |
| C1535 | 4030011600 | S.CER C1608 JB 1E 104K-T | T | 133.7/172.6 |
| C1536 | 4030017870 | S.CER C1608 CH 1H 681J-T | T | 126.2/179.5 |
| C1537 | 4510008500 | S.ELE EEE1CA101WP | T | 111.3/176 |
| C1538 | 4030011600 | S.CER C1608 JB 1E 104K-T | T | 107.1/176 |
| C1539 | 4030011600 | S.CER C1608 JB 1E 104K-T | T | 115.5/176 |
| C1540 | 4510008500 | S.ELE EEE1CA101WP | T | 119.7/176 |
| C1541 | 4030007050 | S.CER C1608 CH 1H 220J-T | T | 124/175 |
| C1651 | 4030006880 | S.CER C1608 JB 1H 472K-T | B | 105.5/144 |
| C1653 | 4030006880 | S.CER C1608 JB 1H 472K-T | B | 109/137.2 |
| C1654 | 4030017810 | S.CER C1608 CH 1H 102J-T | B | 106.9/137.2 |
| C1655 | 4030009530 | S.CER C1608 CH 1H 030B-T | T | 107.6/136.8 |
| C1656 | 4610001970 | S.TRI TZC3P200A110R00 | T | 110.9/136.2 |
| C1657 | 4030010220 | S.CER C2012 CH 1H 102J-T | T | 116.4/122.7 |
| C1658 | 4030010220 | S.CER C2012 CH 1H 102J-T | T | 116.4/130.9 |
| C1659 | 4030011600 | S.CER C1608 JB 1E 104K-T | T | 107.8/120 |
| C1660 | 4030011600 | S.CER C1608 JB 1E 104K-T | B | 134/174 |
| C1661 | 4030011600 | S.CER C1608 JB 1E 104K-T | B | 145.2/171.3 |
| C1662 | 4030011600 | S.CER C1608 JB 1E 104K-T | T | 144.3/178 |
| C1663 | 4030011600 | S.CER C1608 JB 1E 104K-T | T | 135.1/170.2 |
| C1665 | 4030006900 | S.CER C1608 JB 1H 103K-T | T | 138.9/164.1 |
| C1666 | 4030006880 | S.CER C1608 JB 1H 472K-T | B | 113.3/144 |
| C1701 | 4030011600 | S.CER C1608 JB 1E 104K-T | T | 153.4/163 |
| C1702 | 4030011600 | S.CER C1608 JB 1E 104K-T | T | 144.4/163 |
| C1703 | 4510004601 | ELE 16 ME 1000 HC | | |
| C1704 | 4030011600 | S.CER C1608 JB 1E 104K-T | B | 180.1/160.2 |
| C1705 | 4030011600 | S.CER C1608 JB 1E 104K-T | B | 186.4/160.2 |

M.=Mounted side (T: Mounted on the Top side, B: Mounted on the Bottom side)
S.=Surface mount

## [RXPLL-B UNIT]

| REF NO. | ORDER NO. | DESCRIPTION | | M. | H/V LOCATION |
|---|---|---|---|---|---|
| C1706 | 4510008520 | S.ELE | EEE1CA470SP | T | 172.7/154.8 |
| C1707 | 4030011600 | S.CER | C1608 JB 1E 104K-T | T | 149.7/154.8 |
| C1708 | 4030006880 | S.CER | C1608 JB 1H 472K-T | T | 175.7/166.8 |
| C1709 | 4030006880 | S.CER | C1608 JB 1H 472K-T | T | 172.6/166.8 |
| C1710 | 4030006880 | S.CER | C1608 JB 1H 472K-T | T | 169.6/166.8 |
| C1711 | 4030011340 | S.CER | C1608 CH 1H 471J-T | T | 171.4/163.5 |
| C1712 | 4030011340 | S.CER | C1608 CH 1H 471J-T | T | 167.5/163.5 |
| C1713 | 4030006880 | S.CER | C1608 JB 1H 472K-T | B | 165.5/168.8 |
| C1714 | 4030006880 | S.CER | C1608 JB 1H 472K-T | B | 153.8/141.8 |
| C1716 | 4030006880 | S.CER | C1608 JB 1H 472K-T | B | 154.7/145.1 |
| C1717 | 4030006880 | S.CER | C1608 JB 1H 472K-T | B | 152.9/145.1 |
| C1719 | 4030006880 | S.CER | C1608 JB 1H 472K-T | B | 151.1/145.1 |
| C1720 | 4030006880 | S.CER | C1608 JB 1H 472K-T | B | 155.6/141.8 |
| C1721 | 4030006880 | S.CER | C1608 JB 1H 472K-T | B | 157.4/141.8 |
| | | | | | |
| RL1001 | 6330001750 | RLY | FTR-B4CA012Z | | |
| RL1002 | 6330001750 | RLY | FTR-B4CA012Z | | |
| RL1003 | 6330001750 | RLY | FTR-B4CA012Z | | |
| RL1004 | 6330001750 | RLY | FTR-B4CA012Z | | |
| RL1005 | 6330001750 | RLY | FTR-B4CA012Z | | |
| RL1006 | 6330001750 | RLY | FTR-B4CA012Z | | |
| RL1203 | 6330001750 | RLY | FTR-B4CA012Z | | |
| RL1206 | 6330001750 | RLY | FTR-B4CA012Z | | |
| | | | | | |
| J2 | 6510019991 | S.CNR | 52808-2271 (2291) | T | 25/9 |
| J10 | 6510007020 | CNR | TMP-J01X-V6 | | |
| J351 | 6510007020 | CNR | TMP-J01X-V6 | | |
| J561 | 6510007020 | CNR | TMP-J01X-V6 | | |
| J601 | 6510007020 | CNR | TMP-J01X-V6 | | |
| J681 | 6510007020 | CNR | TMP-J01X-V6 | | |
| J831 | 6510007020 | CNR | TMP-J01X-V6 | | |
| J1002 | 6510007020 | CNR | TMP-J01X-V6 | | |
| J1101 | 6510007020 | CNR | TMP-J01X-V6 | | |
| J1201 | 6510007020 | CNR | TMP-J01X-V6 | | |
| J1301 | 6510007020 | CNR | TMP-J01X-V6 | | |
| J1501 | 6510018961 | S.CNR | B2B-PH-SM4-TB (LF) (SN) | T | 149.6/177.5 |
| J1701 | 6510019981 | S.CNR | 52808-1671 (1690) | T | 168/177.2 |
| | | | | | |
| W1052 | 9016201006 | WIR | 73/98/025/X98/X98 | | |
| W1401 | 9029495075 | JMP | 73/98/020/X98/X98 | | |
| W1411 | 7120000480 | S.JMP | MJP-0.4-T | T | 125.1/111.6 |
| | | | | | |
| EP20 | 6910012350 | S.BEA | MMZ1608Y 102BT | T | 85.4/126 |
| EP21 | 6910012350 | S.BEA | MMZ1608Y 102BT | T | 88.7/124 |
| EP22 | 6910012350 | S.BEA | MMZ1608Y 102BT | T | 90/124 |
| EP101 | 6910012350 | S.BEA | MMZ1608Y 102BT | B | 47.6/98.6 |
| EP102 | 6910012350 | S.BEA | MMZ1608Y 102BT | B | 47.6/96.8 |
| EP103 | 6910012350 | S.BEA | MMZ1608Y 102BT | T | 46/96.8 |
| EP104 | 6910012350 | S.BEA | MMZ1608Y 102BT | T | 46/92.9 |
| EP105 | 6910012350 | S.BEA | MMZ1608Y 102BT | T | 46/91.6 |
| EP106 | 6910012350 | S.BEA | MMZ1608Y 102BT | T | 46/89 |
| EP107 | 6910012350 | S.BEA | MMZ1608Y 102BT | B | 47.6/100.4 |
| EP1701 | 6910012350 | S.BEA | MMZ1608Y 102BT | T | 170.1/163.5 |
| EP1702 | 6910012350 | S.BEA | MMZ1608Y 102BT | T | 168.8/163.5 |
| EP1801 | 6910012350 | S.BEA | MMZ1608Y 102BT | B | 153/132.7 |
| EP1802 | 6910012350 | S.BEA | MMZ1608Y 102BT | B | 142.5/18.8 |
| EP1804 | 6910012350 | S.BEA | MMZ1608Y 102BT | B | 112.5/138.7 |
| EP1805 | 6910012350 | S.BEA | MMZ1608Y 102BT | B | 150.2/141.8 |
| EP1806 | 6910012350 | S.BEA | MMZ1608Y 102BT | B | 128.6/64.3 |
| EP1807 | 6910012350 | S.BEA | MMZ1608Y 102BT | B | 117.4/50.2 |
| EP1808 | 6910012350 | S.BEA | MMZ1608Y 102BT | B | 137/166.9 |
| EP1809 | 6910012350 | S.BEA | MMZ1608Y 102BT | B | 147.4/127.4 |
| EP1810 | 6910012350 | S.BEA | MMZ1608Y 102BT | B | 131.3/64.2 |
| EP1811 | 6910012350 | S.BEA | MMZ1608Y 102BT | T | 160.7/56.3 |
| EP1812 | 6910012350 | S.BEA | MMZ1608Y 102BT | B | 153.5/137.4 |
| EP1813 | 6910012350 | S.BEA | MMZ1608Y 102BT | B | 132.6/65.7 |
| EP1814 | 6910012350 | S.BEA | MMZ1608Y 102BT | B | 147.2/22.3 |
| EP1815 | 6910012350 | S.BEA | MMZ1608Y 102BT | B | 156/62.6 |
| EP1816 | 6910012350 | S.BEA | MMZ1608Y 102BT | B | 160.4/20.9 |
| EP1817 | 6910012350 | S.BEA | MMZ1608Y 102BT | B | 168.6/62.2 |
| EP1818 | 6910012350 | S.BEA | MMZ1608Y 102BT | B | 151.2/133.2 |
| EP1819 | 6910012350 | S.BEA | MMZ1608Y 102BT | B | 145.6/127.9 |
| EP1820 | 6910012350 | S.BEA | MMZ1608Y 102BT | B | 148.6/19.8 |
| EP1821 | 6910012350 | S.BEA | MMZ1608Y 102BT | B | 148.6/14.1 |
| EP1825 | 6910012350 | S.BEA | MMZ1608Y 102BT | B | 126.6/7 |
| EP1826 | 6910012350 | S.BEA | MMZ1608Y 102BT | B | 151.5/137.7 |
| EP1830 | 6910012350 | S.BEA | MMZ1608Y 102BT | B | 141.3/135.2 |
| EP1831 | 6910012350 | S.BEA | MMZ1608Y 102BT | B | 143.4/128.5 |
| EP1832 | 6910012350 | S.BEA | MMZ1608Y 102BT | B | 149.2/137.5 |
| EP1833 | 6910012350 | S.BEA | MMZ1608Y 102BT | B | 147.2/133.5 |
| EP1834 | 6910012350 | S.BEA | MMZ1608Y 102BT | T | 115.8/108.3 |
| EP1835 | 6910012350 | S.BEA | MMZ1608Y 102BT | B | 141.6/128.5 |
| EP1836 | 6910012350 | S.BEA | MMZ1608Y 102BT | T | 111/110.2 |
| EP1837 | 6910012350 | S.BEA | MMZ1608Y 102BT | B | 145.8/134.1 |
| EP1838 | 6910012350 | S.BEA | MMZ1608Y 102BT | T | 116.3/106.1 |

## [BPF UNIT]

| REF NO. | ORDER NO. | DESCRIPTION | | M. | H/V LOCATION |
|---|---|---|---|---|---|
| IC101 | 1130011510 | S.IC | BU2099FV-E2 | T | 9.5/77.6 |
| IC102 | 1130011510 | S.IC | BU2099FV-E2 | T | 9.7/100.9 |
| IC401 | 1130011510 | S.IC | BU2099FV-E2 | T | 10.3/39.3 |
| IC402 | 1130011510 | S.IC | BU2099FV-E2 | T | 9.6/59.4 |
| | | | | | |
| Q355 | 1590001330 | S.TR | DTA114EUA T106 | T | 191.6/68.1 |
| Q381 | 1590000680 | S.TR | DTC114EUA T106 | T | 232/60.3 |
| Q383 | 1590000680 | S.TR | DTC114EUA T106 | T | 229.2/51.9 |
| Q384 | 1590000680 | S.TR | DTC114EUA T106 | T | 226.2/51.9 |
| Q385 | 1590000680 | S.TR | DTC114EUA T106 | T | 233.1/54.7 |
| Q386 | 1590000430 | S.TR | DTC144EUA T106 | T | 230.1/54.7 |
| Q387 | 1590000680 | S.TR | DTC114EUA T106 | T | 228.8/60.2 |
| Q401 | 1530002841 | S.TR | 2SC4116-Y (TE85R,F) | T | 234.5/108.2 |
| Q402 | 1530002060 | S.TR | 2SC4081 T106 R | B | 224.2/99.2 |
| Q403 | 1590001330 | S.TR | DTA114EUA T106 | B | 227.6/100.2 |
| Q404 | 1590000430 | S.TR | DTC144EUA T106 | T | 232/108.2 |
| Q855 | 1590001330 | S.TR | DTA114EUA T106 | T | 192/53 |
| Q871 | 1590001330 | S.TR | DTA114EUA T106 | B | 234.6/18.8 |
| Q872 | 1530002060 | S.TR | 2SC4081 T106 R | B | 231.2/19.5 |
| Q873 | 1530002841 | S.TR | 2SC4116-Y (TE85R,F) | B | 231.2/16.6 |
| Q874 | 1590000430 | S.TR | DTC144EUA T106 | T | 195.7/57.4 |
| Q900 | 1590001330 | S.TR | DTA114EUA T106 | B | 217.4/116.1 |
| Q901 | 1530003851 | S.TR | 2SC5551F-TD-E | T | 210.3/113.5 |
| Q902 | 1590001330 | S.TR | DTA114EUA T106 | T | 200.6/115.1 |
| Q903 | 1530003851 | S.TR | 2SC5551F-TD-E | T | 189.4/113.5 |
| Q950 | 1590001330 | S.TR | DTA114EUA T106 | B | 215/3.2 |
| Q951 | 1530003851 | S.TR | 2SC5551F-TD-E | T | 209.8/17.6 |
| Q952 | 1590001330 | S.TR | DTA114EUA T106 | B | 199.1/4 |
| Q953 | 1530003851 | S.TR | 2SC5551F-TD-E | T | 188.6/17.6 |
| | | | | | |
| D1 | 1790001250 | S.DIO | MA2S111-(TX) | T | 184/75.2 |
| D21 | 1790001250 | S.DIO | MA2S111-(TX) | B | 167.1/77.7 |
| D51 | 1790001250 | S.DIO | MA2S111-(TX) | T | 163.7/68.6 |
| D81 | 1790001250 | S.DIO | MA2S111-(TX) | B | 141.5/68.1 |
| D111 | 1790001250 | S.DIO | MA2S111-(TX) | T | 107.4/67.6 |
| D141 | 1790001250 | S.DIO | MA2S111-(TX) | T | 94.7/70.3 |
| D171 | 1790001250 | S.DIO | MA2S111-(TX) | B | 81.6/74.3 |
| D201 | 1790001250 | S.DIO | MA2S111-(TX) | B | 70.2/73.1 |
| D231 | 1790001250 | S.DIO | MA2S111-(TX) | T | 49.4/69.1 |
| D261 | 1790001250 | S.DIO | MA2S111-(TX) | B | 35.4/70.1 |
| D291 | 1790001250 | S.DIO | MA2S111-(TX) | B | 203.9/71.9 |
| D321 | 1790001250 | S.DIO | MA2S111-(TX) | T | 204/97.5 |
| D351 | 1790001250 | S.DIO | MA2S111-(TX) | T | 189/94.9 |
| D352 | 1790001250 | S.DIO | MA2S111-(TX) | T | 189/88.7 |
| D353 | 1790001250 | S.DIO | MA2S111-(TX) | T | 189/82.5 |
| D354 | 1790001250 | S.DIO | MA2S111-(TX) | T | 189/76.3 |
| D355 | 1790001250 | S.DIO | MA2S111-(TX) | T | 193.9/66.2 |
| D371 | 1790001250 | S.DIO | MA2S111-(TX) | T | 218.5/69.9 |
| D373 | 1790001250 | S.DIO | MA2S111-(TX) | B | 239.8/116.1 |
| D391 | 1750000581 | S.DIO | 1SV307 (TPH3,F) | B | 233.2/49.9 |
| D392 | 1750000581 | S.DIO | 1SV307 (TPH3,F) | B | 236/52.9 |
| D393 | 1750000581 | S.DIO | 1SV307 (TPH3,F) | B | 235.3/63.7 |
| D401 | 1790001250 | S.DIO | MA2S111-(TX) | B | 225.6/95.5 |
| D402 | 1790000980 | S.DIO | MA742 (TX) | B | 233.9/113.2 |
| D501 | 1790001250 | S.DIO | MA2S111-(TX) | B | 184.1/45.6 |
| D531 | 1790001250 | S.DIO | MA2S111-(TX) | B | 167.7/53.7 |
| D561 | 1790001250 | S.DIO | MA2S111-(TX) | B | 164.4/42.5 |
| D591 | 1790001250 | S.DIO | MA2S111-(TX) | B | 144.1/53.4 |
| D621 | 1790001250 | S.DIO | MA2S111-(TX) | T | 107.6/52.6 |
| D651 | 1790001250 | S.DIO | MA2S111-(TX) | T | 94.9/49.6 |
| D681 | 1790001250 | S.DIO | MA2S111-(TX) | B | 81.5/45.7 |
| D711 | 1790001250 | S.DIO | MA2S111-(TX) | B | 70/44.3 |
| D741 | 1790001250 | S.DIO | MA2S111-(TX) | B | 51.4/50.5 |
| D771 | 1790001250 | S.DIO | MA2S111-(TX) | B | 36.5/43.7 |
| D801 | 1790001250 | S.DIO | MA2S111-(TX) | B | 203.8/47.4 |
| D831 | 1790001250 | S.DIO | MA2S111-(TX) | T | 203.7/22.1 |
| D851 | 1790001250 | S.DIO | MA2S111-(TX) | T | 189/27.9 |
| D852 | 1790001250 | S.DIO | MA2S111-(TX) | T | 189/33.1 |
| D853 | 1790001250 | S.DIO | MA2S111-(TX) | T | 189/39.3 |
| D854 | 1790001250 | S.DIO | MA2S111-(TX) | T | 189/45.5 |
| D855 | 1790001250 | S.DIO | MA2S111-(TX) | T | 194/52.8 |
| D871 | 1790001250 | S.DIO | MA2S111-(TX) | B | 241.4/18 |
| D872 | 1790000980 | S.DIO | MA742 (TX) | B | 247.7/15.6 |
| D873 | 1790001250 | S.DIO | MA2S111-(TX) | B | 243/94.1 |
| D900 | 1790001250 | S.DIO | MA2S111-(TX) | B | 218.9/100.4 |
| D901 | 1790001250 | S.DIO | MA2S111-(TX) | T | 207.9/100.7 |
| D902 | 1790001250 | S.DIO | MA2S111-(TX) | B | 197/100.2 |
| D903 | 1790001250 | S.DIO | MA2S111-(TX) | B | 186.4/100.5 |
| D950 | 1790001250 | S.DIO | MA2S111-(TX) | B | 212.3/3.9 |
| D951 | 1790001250 | S.DIO | MA2S111-(TX) | T | 204.4/4.5 |
| D952 | 1790001250 | S.DIO | MA2S111-(TX) | B | 195.7/4.9 |
| D953 | 1790001250 | S.DIO | MA2S111-(TX) | B | 182.6/5.3 |
| D954 | 1790001250 | S.DIO | MA2S111-(TX) | T | 235.4/16.2 |
| | | | | | |
| L1 | 6200005521 | S.COL | NLV25T-470J | T | 186.7/100.6 |
| L2 | 6200005521 | S.COL | NLV25T-470J | B | 183.8/77.2 |
| L3 | 6200010830 | S.COL | C2520C-3R3G-A | T | 179.2/88.5 |
| L4 | 6200010830 | S.COL | C2520C-3R3G-A | T | 179.2/80.2 |
| L5 | 6200010830 | S.COL | C2520C-3R3G-A | T | 178.2/84.3 |
| L6 | 6200010830 | S.COL | C2520C-3R3G-A | T | 178/76.2 |
| L21 | 6200005521 | S.COL | NLV25T-470J | B | 166/107.5 |
| L22 | 6200005521 | S.COL | NLV25T-470J | B | 163/107.5 |
| L23 | 6140004040 | COL | LR-443 | | |
| L24 | 6140004050 | COL | LR-444 | | |
| L25 | 6140004050 | COL | LR-444 | | |
| L26 | 6140004050 | COL | LR-444 | | |
| L27 | 6140004040 | COL | LR-443 | | |
| L51 | 6200005521 | S.COL | NLV25T-470J | B | 154.3/111.3 |
| L52 | 6200005521 | S.COL | NLV25T-470J | B | 151.3/107.2 |
| L53 | 6140004060 | COL | LR-445 | | |
| L54 | 6140004080 | COL | LR-446 | | |

M.=Mounted side (T: Mounted on the Top side, B: Mounted on the Bottom side)
S.=Surface mount

## [BPF UNIT]

| REF NO. | ORDER NO. | DESCRIPTION | M. | H/V LOCATION |
|---|---|---|---|---|
| L55 | 6140004080 | COL LR-446 | | |
| L56 | 6140004080 | COL LR-446 | | |
| L57 | 6140004060 | COL LR-445 | | |
| L81 | 6200005521 | S.COL NLV25T-470J | B | 142.1/109.6 |
| L82 | 6200005521 | S.COL NLV25T-470J | B | 139.1/107.3 |
| L83 | 6140004090 | COL LR-447 | | |
| L84 | 6140004230 | COL LR-458 | | |
| L85 | 6140004230 | COL LR-458 | | |
| L86 | 6140004230 | COL LR-458 | | |
| L87 | 6140004090 | COL LR-447 | | |
| L111 | 6200005521 | S.COL NLV25T-470J | B | 118.1/109.1 |
| L112 | 6200005521 | S.COL NLV25T-470J | B | 114.5/109.1 |
| L113 | 6140004090 | COL LR-447 | | |
| L114 | 6140004100 | COL LR-448 | | |
| L115 | 6140004100 | COL LR-448 | | |
| L116 | 6140004100 | COL LR-448 | | |
| L117 | 6140004090 | COL LR-447 | | |
| L141 | 6200005521 | S.COL NLV25T-470J | B | 106.8/111.4 |
| L142 | 6200005521 | S.COL NLV25T-470J | B | 100.3/107.6 |
| L143 | 6140004110 | COL LR-449 | | |
| L144 | 6140004120 | COL LR-450 | | |
| L145 | 6140004120 | COL LR-450 | | |
| L146 | 6140004120 | COL LR-450 | | |
| L147 | 6140004110 | COL LR-449 | | |
| L171 | 6200005521 | S.COL NLV25T-470J | B | 84.9/116.9 |
| L172 | 6200005521 | S.COL NLV25T-470J | B | 81.8/115.4 |
| L173 | 6140004140 | COL LR-451 | | |
| L174 | 6140004150 | COL LR-452 | | |
| L175 | 6140004150 | COL LR-452 | | |
| L176 | 6140004150 | COL LR-452 | | |
| L177 | 6140004140 | COL LR-451 | | |
| L201 | 6200007021 | S.COL NLV25T-270J | B | 61.9/112 |
| L202 | 6200007021 | S.COL NLV25T-270J | B | 59.4/109.7 |
| L203 | 6140004160 | COL LR-453 | | |
| L204 | 6140004180 | COL LR-454 | | |
| L205 | 6140004180 | COL LR-454 | | |
| L206 | 6140004180 | COL LR-454 | | |
| L207 | 6140004160 | COL LR-453 | | |
| L231 | 6200005011 | S.COL NLV25T-100J | B | 44.2/116.9 |
| L232 | 6200005011 | S.COL NLV25T-100J | B | 44.1/114.3 |
| L233 | 6140004190 | COL LR-455 | | |
| L234 | 6140004210 | COL LR-456 | | |
| L235 | 6140004210 | COL LR-456 | | |
| L236 | 6140004210 | COL LR-456 | | |
| L237 | 6140004190 | COL LR-455 | | |
| L261 | 6200009141 | S.COL NLV25T-6R8J | B | 27.3/111.4 |
| L262 | 6200009141 | S.COL NLV25T-6R8J | B | 24.8/109.7 |
| L263 | 6140004220 | COL LR-457 | | |
| L264 | 6140004160 | COL LR-453 | | |
| L265 | 6140004160 | COL LR-453 | | |
| L266 | 6140004160 | COL LR-453 | | |
| L267 | 6140004220 | COL LR-457 | | |
| L291 | 6200003281 | S.COL NLV25T-2R2J | B | 222.8/74.1 |
| L292 | 6200003281 | S.COL NLV25T-2R2J | B | 214/75.1 |
| L293 | 6200008090 | S.COL LQW2BHN68NJ03L | T | 214.7/79.6 |
| L294 | 6200003041 | S.COL NLV32T-R68J | T | 213.5/82.7 |
| L295 | 6200008090 | S.COL LQW2BHN68NJ03L | T | 210.1/79.6 |
| L296 | 6200010870 | S.COL C2520C-R33G-A (0.33U) | T | 209.9/76.6 |
| L321 | 6200003281 | S.COL NLV25T-2R2J | B | 209.5/93.5 |
| L322 | 6200003281 | S.COL NLV25T-2R2J | B | 213.2/95.3 |
| L323 | 6200003011 | S.COL NLV32T-R27J | T | 214.2/91 |
| L324 | 6200003001 | S.COL NLV32T-R22J | T | 209.7/87.1 |
| L325 | 6200003011 | S.COL NLV32T-R27J | T | 209.6/93.2 |
| L371 | 6140004390 | COL LR-459 | | |
| L372 | 6140004390 | COL LR-459 | | |
| L373 | 6140003530 | COL LR-395 | | |
| L391 | 6200005491 | S.COL NLV32T-331J | T | 230.2/48.4 |
| L392 | 6200005491 | S.COL NLV32T-331J | T | 231.7/64 |
| L393 | 6200003211 | S.COL NLV32T-820J | B | 231.7/42.7 |
| L394 | 6200005491 | S.COL NLV32T-331J | B | 236.2/46.6 |
| L395 | 6200005491 | S.COL NLV32T-331J | B | 225.5/48.3 |
| L501 | 6200005521 | S.COL NLV25T-470J | B | 183.7/36.2 |
| L502 | 6200005521 | S.COL NLV25T-470J | B | 184.6/41 |
| L504 | 6200010830 | S.COL C2520C-3R3G-A | T | 178.7/33.1 |
| L505 | 6200010830 | S.COL C2520C-3R3G-A | T | 177.8/41.5 |
| L506 | 6200010830 | S.COL C2520C-3R3G-A | T | 178.9/37.6 |
| L507 | 6200010830 | S.COL C2520C-3R3G-A | T | 179.1/45 |
| L531 | 6200005521 | S.COL NLV25T-470J | B | 167.5/13 |
| L532 | 6200005521 | S.COL NLV25T-470J | B | 170.5/13 |
| L533 | 6140004040 | COL LR-443 | | |
| L534 | 6140004050 | COL LR-444 | | |
| L535 | 6140004050 | COL LR-444 | | |
| L536 | 6140004050 | COL LR-444 | | |
| L537 | 6140004040 | COL LR-443 | | |
| L561 | 6200005521 | S.COL NLV25T-470J | B | 149.9/12.4 |
| L562 | 6200005521 | S.COL NLV25T-470J | B | 153.8/16.5 |
| L563 | 6140004060 | COL LR-445 | | |
| L564 | 6140004080 | COL LR-446 | | |
| L565 | 6140004080 | COL LR-446 | | |
| L566 | 6140004080 | COL LR-446 | | |
| L567 | 6140004060 | COL LR-445 | | |
| L591 | 6200005521 | S.COL NLV25T-470J | B | 139.9/9.2 |
| L592 | 6200005521 | S.COL NLV25T-470J | B | 142.7/9.2 |
| L593 | 6140004090 | COL LR-447 | | |
| L594 | 6140004230 | COL LR-458 | | |
| L595 | 6140004230 | COL LR-458 | | |
| L596 | 6140004230 | COL LR-458 | | |
| L597 | 6140004090 | COL LR-447 | | |
| L621 | 6200005521 | S.COL NLV25T-470J | B | 116.8/9.5 |
| L622 | 6200005521 | S.COL NLV25T-470J | B | 122.4/6.3 |
| L623 | 6140004090 | COL LR-447 | | |
| L624 | 6140004100 | COL LR-448 | | |
| L625 | 6140004100 | COL LR-448 | | |
| L626 | 6140004100 | COL LR-448 | | |

## [BPF UNIT]

| REF NO. | ORDER NO. | DESCRIPTION | M. | H/V LOCATION |
|---|---|---|---|---|
| L627 | 6140004090 | COL LR-447 | | |
| L651 | 6200005521 | S.COL NLV25T-470J | B | 105.4/13 |
| L652 | 6200005521 | S.COL NLV25T-470J | B | 108/9.5 |
| L653 | 6140004110 | COL LR-449 | | |
| L654 | 6140004120 | COL LR-450 | | |
| L655 | 6140004120 | COL LR-450 | | |
| L656 | 6140004120 | COL LR-450 | | |
| L657 | 6140004110 | COL LR-449 | | |
| L681 | 6200005521 | S.COL NLV25T-470J | B | 77.4/6.2 |
| L682 | 6200005521 | S.COL NLV25T-470J | B | 80.4/3.8 |
| L683 | 6140004140 | COL LR-451 | | |
| L684 | 6140004150 | COL LR-452 | | |
| L685 | 6140004150 | COL LR-452 | | |
| L686 | 6140004150 | COL LR-452 | | |
| L687 | 6140004140 | COL LR-451 | | |
| L711 | 6200007021 | S.COL NLV25T-270J | B | 56.4/10.8 |
| L712 | 6200007021 | S.COL NLV25T-270J | B | 61.1/8.8 |
| L713 | 6140004160 | COL LR-453 | | |
| L714 | 6140004180 | COL LR-454 | | |
| L715 | 6140004180 | COL LR-454 | | |
| L716 | 6140004180 | COL LR-454 | | |
| L717 | 6140004160 | COL LR-453 | | |
| L741 | 6200005011 | S.COL NLV25T-100J | B | 44.2/6.2 |
| L742 | 6200005011 | S.COL NLV25T-100J | B | 46.2/3.4 |
| L743 | 6140004190 | COL LR-455 | | |
| L744 | 6140004210 | COL LR-456 | | |
| L745 | 6140004210 | COL LR-456 | | |
| L746 | 6140004210 | COL LR-456 | | |
| L747 | 6140004190 | COL LR-455 | | |
| L771 | 6200009141 | S.COL NLV25T-6R8J | B | 23.4/10.6 |
| L772 | 6200009141 | S.COL NLV25T-6R8J | B | 27.1/9 |
| L773 | 6140004220 | COL LR-457 | | |
| L774 | 6140004160 | COL LR-453 | | |
| L775 | 6140004160 | COL LR-453 | | |
| L776 | 6140004160 | COL LR-453 | | |
| L777 | 6140004220 | COL LR-457 | | |
| L801 | 6200003281 | S.COL NLV25T-2R2J | B | 214.4/45.7 |
| L802 | 6200003281 | S.COL NLV25T-2R2J | B | 211.8/42.4 |
| L805 | 6200008090 | S.COL LQW2BHN68NJ03L | T | 214.6/41.4 |
| L806 | 6200003041 | S.COL NLV32T-R68J | T | 211.5/36.9 |
| L807 | 6200008090 | S.COL LQW2BHN68NJ03L | T | 209.7/40 |
| L808 | 6200010870 | S.COL C2520C-R33G-A (0.33U) | T | 209.8/43 |
| L831 | 6200003281 | S.COL NLV25T-2R2J | B | 211.6/26.7 |
| L832 | 6200003281 | S.COL NLV25T-2R2J | B | 213.2/23.7 |
| L833 | 6200003011 | S.COL NLV32T-R27J | T | 214.2/29.7 |
| L834 | 6200003001 | S.COL NLV32T-R22J | T | 209.7/32.9 |
| L835 | 6200003011 | S.COL NLV32T-R27J | T | 209.4/27.3 |
| L900 | 6200001831 | S.COL NLV32T-100J | B | 213.2/113.1 |
| L901 | 6200003950 | S.COL HF50ACC 322513-T | B | 11.6/20.4 |
| L902 | 6200003950 | S.COL HF50ACC 322513-T | B | 11.7/16.4 |
| L903 | 6200001831 | S.COL NLV32T-100J | T | 7.4/27.5 |
| L904 | 6200001831 | S.COL NLV32T-100J | T | 11.6/27.5 |
| L905 | 6140004380 | COL LR-498 | | |
| L906 | 6200009690 | S.COL LQH43CN101K03L | T | 216.9/114.5 |
| L907 | 6200001831 | S.COL NLV32T-100J | B | 193.1/113.1 |
| L908 | 6140004380 | COL LR-498 | | |
| L909 | 6200009690 | S.COL LQH43CN101K03L | T | 196/115.1 |
| L950 | 6200001831 | S.COL NLV32T-100J | B | 211.8/17 |
| L951 | 6140004380 | COL LR-498 | | |
| L952 | 6200009690 | S.COL LQH43CN101K03L | T | 213.8/3.4 |
| L953 | 6200001831 | S.COL NLV32T-100J | B | 191.1/17 |
| L954 | 6140004380 | COL LR-498 | | |
| L955 | 6200009690 | S.COL LQH43CN101K03L | T | 196/3.3 |
| | | | | |
| R1 | 7030003640 | S.RES ERJ3GEYJ 473 V (47 k) | T | 181.4/92.2 |
| R3 | 7030003860 | S.RES ERJ3GE JPW V | T | 182.1/90.3 |
| R101 | 7030003320 | S.RES ERJ3GEYJ 101 V (100) | T | 7.2/67.9 |
| R102 | 7030003320 | S.RES ERJ3GEYJ 101 V (100) | T | 7.9/71.3 |
| R103 | 7030003320 | S.RES ERJ3GEYJ 101 V (100) | T | 8.7/67.9 |
| R104 | 7030003320 | S.RES ERJ3GEYJ 101 V (100) | T | 9.3/71 |
| R105 | 7030003320 | S.RES ERJ3GEYJ 101 V (100) | T | 10.6/71 |
| R106 | 7030003320 | S.RES ERJ3GEYJ 101 V (100) | T | 11.3/89.9 |
| R107 | 7030003320 | S.RES ERJ3GEYJ 101 V (100) | T | 11.6/87.9 |
| R108 | 7030003320 | S.RES ERJ3GEYJ 101 V (100) | T | 11.1/83.2 |
| R117 | 7030003320 | S.RES ERJ3GEYJ 101 V (100) | T | 9.8/83.5 |
| R118 | 7030003320 | S.RES ERJ3GEYJ 101 V (100) | T | 8.5/83.5 |
| R119 | 7030003320 | S.RES ERJ3GEYJ 101 V (100) | T | 7.4/87.2 |
| R120 | 7030003320 | S.RES ERJ3GEYJ 101 V (100) | T | 6.7/83.2 |
| R121 | 7030003320 | S.RES ERJ3GEYJ 101 V (100) | T | 6.9/92.2 |
| R122 | 7030003320 | S.RES ERJ3GEYJ 101 V (100) | T | 7.1/94.8 |
| R123 | 7030003320 | S.RES ERJ3GEYJ 101 V (100) | B | 10/95.5 |
| R124 | 7030003320 | S.RES ERJ3GEYJ 101 V (100) | T | 11/94.3 |
| R133 | 7030003560 | S.RES ERJ3GEYJ 103 V (10 k) | T | 191.2/55.8 |
| R134 | 7030003320 | S.RES ERJ3GEYJ 101 V (100) | B | 10/98.9 |
| R141 | 7030003360 | S.RES ERJ3GEYJ 221 V (220) | B | 5.6/14 |
| R142 | 7030003360 | S.RES ERJ3GEYJ 221 V (220) | B | 5.6/15.7 |
| R143 | 7030003360 | S.RES ERJ3GEYJ 221 V (220) | B | 5.1/19.2 |
| R351 | 7030003340 | S.RES ERJ3GEYJ 151 V (150) | B | 197.7/90.7 |
| R352 | 7030003300 | S.RES ERJ3GEYJ 680 V (68) | B | 193.9/87.5 |
| R354 | 7030003280 | S.RES ERJ3GEYJ 470 V (47) | B | 200.9/84.8 |
| R355 | 7030003320 | S.RES ERJ3GEYJ 101 V (100) | B | 193.9/81.3 |
| R357 | 7030003240 | S.RES ERJ3GEYJ 220 V (22) | B | 197.8/71.6 |
| R358 | 7030003350 | S.RES ERJ3GEYJ 181 V (180) | B | 194.4/70.3 |
| R360 | 7030003320 | S.RES ERJ3GEYJ 101 V (100) | T | 191.8/66.1 |
| R371 | 7030003320 | S.RES ERJ3GEYJ 101 V (100) | T | 217.4/71.2 |
| R372 | 7030003320 | S.RES ERJ3GEYJ 101 V (100) | B | 209.5/61.9 |
| R373 | 7030003320 | S.RES ERJ3GEYJ 101 V (100) | B | 209.5/58.9 |
| R381 | 7030003520 | S.RES ERJ3GEYJ 472 V (4.7 k) | T | 231.4/51.9 |
| R382 | 7030003360 | S.RES ERJ3GEYJ 221 V (220) | B | 239.8/112.7 |
| R383 | 7030003680 | S.RES ERJ3GEYJ 104 V (100 k) | T | 232.3/49.1 |
| R384 | 7030003420 | S.RES ERJ3GEYJ 681 V (680) | B | 236/49.9 |
| R385 | 7030003420 | S.RES ERJ3GEYJ 681 V (680) | B | 231.3/46.7 |
| R386 | 7030003480 | S.RES ERJ3GEYJ 222 V (2.2 k) | B | 237.6/62.6 |

M.=Mounted side (T: Mounted on the Top side, B: Mounted on the Bottom side)
S.=Surface mount

## [BPF UNIT]

| REF NO. | ORDER NO. | DESCRIPTION | M. | H/V LOCATION |
|---|---|---|---|---|
| R387 | 7030003560 | S.RES ERJ3GEYJ 103 V (10 k) | B | 238.8/55.5 |
| R388 | 7540000130 | ABS 2P-50A-301 | | |
| R389 | 7030003420 | S.RES ERJ3GEYJ 681 V (680) | T | 235/65.4 |
| R390 | 7030003560 | S.RES ERJ3GEYJ 103 V (10 k) | T | 233/51.9 |
| R391 | 7030003680 | S.RES ERJ3GEYJ 104 V (100 k) | T | 234.3/51.9 |
| R392 | 7030003420 | S.RES ERJ3GEYJ 681 V (680) | B | 234.7/49.9 |
| R393 | 7030003420 | S.RES ERJ3GEYJ 681 V (680) | B | 231.3/48 |
| R394 | 7030003420 | S.RES ERJ3GEYJ 681 V (680) | T | 235/64.1 |
| R395 | 7030003420 | S.RES ERJ3GEYJ 681 V (680) | B | 235.2/56.4 |
| R396 | 7030003420 | S.RES ERJ3GEYJ 681 V (680) | B | 235.2/55.1 |
| R401 | 7030003360 | S.RES ERJ3GEYJ 221 V (220) | B | 227.6/96.2 |
| R402 | 7030003680 | S.RES ERJ3GEYJ 104 V (100 k) | T | 234.5/111.6 |
| R403 | 7030003480 | S.RES ERJ3GEYJ 222 V (2.2 k) | T | 231.9/110.3 |
| R404 | 7030003860 | S.RES ERJ3GE JPW V | T | 234.5/110.3 |
| R441 | 7030003360 | S.RES ERJ3GEYJ 221 V (220) | B | 11/24.4 |
| R442 | 7030003360 | S.RES ERJ3GEYJ 221 V (220) | B | 8.2/23.4 |
| R451 | 7030003320 | S.RES ERJ3GEYJ 101 V (100) | T | 10.6/32.9 |
| R452 | 7030003320 | S.RES ERJ3GEYJ 101 V (100) | T | 11.9/33.1 |
| R453 | 7030003320 | S.RES ERJ3GEYJ 101 V (100) | T | 13.2/33.1 |
| R454 | 7030003320 | S.RES ERJ3GEYJ 101 V (100) | T | 14.5/33.1 |
| R455 | 7030003320 | S.RES ERJ3GEYJ 101 V (100) | T | 14.5/36.9 |
| R456 | 7030003320 | S.RES ERJ3GEYJ 101 V (100) | T | 11.1/46.9 |
| R457 | 7030003320 | S.RES ERJ3GEYJ 101 V (100) | T | 8.9/46.3 |
| R458 | 7030003320 | S.RES ERJ3GEYJ 101 V (100) | T | 8.9/47.6 |
| R467 | 7030003320 | S.RES ERJ3GEYJ 101 V (100) | T | 10.6/49.6 |
| R468 | 7030003320 | S.RES ERJ3GEYJ 101 V (100) | T | 13.6/50.2 |
| R469 | 7030003320 | S.RES ERJ3GEYJ 101 V (100) | T | 7.6/49.4 |
| R470 | 7030003320 | S.RES ERJ3GEYJ 101 V (100) | T | 6.9/50.7 |
| R471 | 7030003320 | S.RES ERJ3GEYJ 101 V (100) | T | 6.2/52.6 |
| R472 | 7030003320 | S.RES ERJ3GEYJ 101 V (100) | T | 9.2/53 |
| R473 | 7030003320 | S.RES ERJ3GEYJ 101 V (100) | T | 10.5/53.7 |
| R474 | 7030003320 | S.RES ERJ3GEYJ 101 V (100) | T | 11.8/54.2 |
| R475 | 7030003320 | S.RES ERJ3GEYJ 101 V (100) | T | 10.7/63.9 |
| R481 | 7030003560 | S.RES ERJ3GEYJ 103 V (10 k) | B | 196.9/55.9 |
| R501 | 7030003640 | S.RES ERJ3GEYJ 473 V (47 k) | T | 183/30 |
| R503 | 7030003860 | S.RES ERJ3GE JPW V | T | 182.2/31.9 |
| R851 | 7030003340 | S.RES ERJ3GEYJ 151 V (150) | B | 198.2/32.1 |
| R852 | 7030003300 | S.RES ERJ3GEYJ 680 V (68) | B | 193.5/32.1 |
| R854 | 7030003280 | S.RES ERJ3GEYJ 470 V (47) | B | 200.9/34.7 |
| R855 | 7030003320 | S.RES ERJ3GEYJ 101 V (100) | B | 193.5/38.3 |
| R857 | 7030003240 | S.RES ERJ3GEYJ 220 V (22) | B | 197.9/48.2 |
| R858 | 7030003350 | S.RES ERJ3GEYJ 181 V (180) | B | 193.8/49.7 |
| R860 | 7030003320 | S.RES ERJ3GEYJ 101 V (100) | T | 192/51 |
| R871 | 7030003360 | S.RES ERJ3GEYJ 221 V (220) | B | 238/19.5 |
| R872 | 7030003680 | S.RES ERJ3GEYJ 104 V (100 k) | B | 236.5/14.4 |
| R873 | 7030003480 | S.RES ERJ3GEYJ 222 V (2.2 k) | B | 239.6/16 |
| R874 | 7030003860 | S.RES ERJ3GE JPW V | B | 236.5/16 |
| R900 | 7030003280 | S.RES ERJ3GEYJ 470 V (47) | B | 212.8/117.1 |
| R901 | 7030003440 | S.RES ERJ3GEYJ 102 V (1 k) | T | 207.2/117.4 |
| R902 | 7030003530 | S.RES ERJ3GEYJ 562 V (5.6 k) | T | 210.4/116.6 |
| R903 | 7030003380 | S.RES ERJ3GEYJ 331 V (330) | B | 203.9/113.3 |
| R904 | 7030003220 | S.RES ERJ3GEYJ 150 V (15) | B | 206.3/111.6 |
| R905 | 7030003380 | S.RES ERJ3GEYJ 331 V (330) | B | 203.3/111.8 |
| R906 | 7030003320 | S.RES ERJ3GEYJ 101 V (100) | T | 12.5/92.8 |
| R907 | 7030003320 | S.RES ERJ3GEYJ 101 V (100) | T | 13.8/92.8 |
| R908 | 7030003280 | S.RES ERJ3GEYJ 470 V (47) | B | 194.5/116.4 |
| R909 | 7030003440 | S.RES ERJ3GEYJ 102 V (1 k) | T | 185.4/115.9 |
| R910 | 7030003530 | S.RES ERJ3GEYJ 562 V (5.6 k) | T | 189.6/116.7 |
| R911 | 7030003320 | S.RES ERJ3GEYJ 101 V (100) | B | 209.4/110.8 |
| R912 | 7030003320 | S.RES ERJ3GEYJ 101 V (100) | B | 187.5/111.2 |
| R913 | 7030004050 | S.RES ERJ3GEYJ 1R0 V (1) | B | 189.7/106.1 |
| R950 | 7030003280 | S.RES ERJ3GEYJ 470 V (47) | B | 210.2/20 |
| R951 | 7030003440 | S.RES ERJ3GEYJ 102 V (1 k) | T | 207.7/21.4 |
| R952 | 7030003530 | S.RES ERJ3GEYJ 562 V (5.6 k) | T | 211/20.8 |
| R953 | 7030003380 | S.RES ERJ3GEYJ 331 V (330) | B | 203.4/18.4 |
| R954 | 7030003220 | S.RES ERJ3GEYJ 150 V (15) | B | 205.6/16.7 |
| R955 | 7030003380 | S.RES ERJ3GEYJ 331 V (330) | B | 202.8/16.7 |
| R956 | 7030003320 | S.RES ERJ3GEYJ 101 V (100) | T | 8.3/65 |
| R957 | 7030003320 | S.RES ERJ3GEYJ 101 V (100) | B | 11.6/60.5 |
| R958 | 7030003280 | S.RES ERJ3GEYJ 470 V (47) | B | 189.5/19.9 |
| R959 | 7030003440 | S.RES ERJ3GEYJ 102 V (1 k) | T | 186.5/21.4 |
| R960 | 7030003530 | S.RES ERJ3GEYJ 562 V (5.6 k) | T | 191.5/20 |
| R961 | 7030003320 | S.RES ERJ3GEYJ 101 V (100) | B | 208.3/16.4 |
| R962 | 7030003320 | S.RES ERJ3GEYJ 101 V (100) | B | 187.7/16.4 |
| R963 | 7030004050 | S.RES ERJ3GEYJ 1R0 V (1) | B | 181.4/16.5 |
| | | | | |
| C1 | 4030006880 | S.CER C1608 JB 1H 472K-T | B | 183.4/92.3 |
| C2 | 4030006880 | S.CER C1608 JB 1H 472K-T | T | 185.3/91.5 |
| C3 | 4030006880 | S.CER C1608 JB 1H 472K-T | T | 184.1/99.8 |
| C4 | 4030006880 | S.CER C1608 JB 1H 472K-T | B | 183.1/73.9 |
| C5 | 4030006880 | S.CER C1608 JB 1H 472K-T | B | 182.5/66.5 |
| C6 | 4030006880 | S.CER C1608 JB 1H 472K-T | T | 183.9/73.9 |
| C7 | 4030017840 | S.CER C2012 CH 1H 222J-T | T | 182.8/86.4 |
| C8 | 4030017850 | S.CER C2012 CH 1H 272J-T | T | 182.9/84.1 |
| C9 | 4030017820 | S.CER C2012 CH 1H 122J-T | T | 182.9/82.3 |
| C10 | 4030017840 | S.CER C2012 CH 1H 222J-T | T | 182.8/77.5 |
| C21 | 4030006880 | S.CER C1608 JB 1H 472K-T | B | 165.3/112.2 |
| C22 | 4030006880 | S.CER C1608 JB 1H 472K-T | B | 162.3/112.2 |
| C23 | 4030006880 | S.CER C1608 JB 1H 472K-T | B | 166.8/110.5 |
| C24 | 4030006880 | S.CER C1608 JB 1H 472K-T | T | 163.7/81.5 |
| C25 | 4030006880 | S.CER C1608 JB 1H 472K-T | B | 171.5/76.9 |
| C26 | 4030006880 | S.CER C1608 JB 1H 472K-T | B | 168.9/77.7 |
| C27 | 4030017810 | S.CER C1608 CH 1H 102J-T | B | 162.6/104.3 |
| C28 | 4030017810 | S.CER C1608 CH 1H 102J-T | B | 162.6/102.4 |
| C29 | 4030010760 | S.CER C1608 CH 1H 331J-T | B | 168.7/98 |
| C30 | 4030007140 | S.CER C1608 CH 1H 121J-T | B | 168.7/96.1 |
| C31 | 4030007160 | S.CER C1608 CH 1H 181J-T | B | 164.1/93.9 |
| C32 | 4030007060 | S.CER C1608 CH 1H 270J-T | B | 166.1/94 |
| C33 | 4030010760 | S.CER C1608 CH 1H 331J-T | B | 168.7/93.2 |
| C34 | 4030007090 | S.CER C1608 CH 1H 470J-T | B | 168.7/90.8 |
| C35 | 4030007160 | S.CER C1608 CH 1H 181J-T | B | 164.3/89.3 |
| C36 | 4030007060 | S.CER C1608 CH 1H 270J-T | B | 164.2/91 |
| C38 | 4030010760 | S.CER C1608 CH 1H 331J-T | B | 165.6/83.4 |

## [BPF UNIT]

| REF NO. | ORDER NO. | DESCRIPTION | M. | H/V LOCATION |
|---|---|---|---|---|
| C39 | 4030007140 | S.CER C1608 CH 1H 121J-T | B | 165.6/85.5 |
| C40 | 4030017810 | S.CER C1608 CH 1H 102J-T | B | 170/74.5 |
| C41 | 4030017810 | S.CER C1608 CH 1H 102J-T | B | 170/72.7 |
| C51 | 4030006880 | S.CER C1608 JB 1H 472K-T | T | 153.8/116 |
| C52 | 4030006880 | S.CER C1608 JB 1H 472K-T | B | 150.6/112.3 |
| C53 | 4030006880 | S.CER C1608 JB 1H 472K-T | B | 153.8/116 |
| C54 | 4030006880 | S.CER C1608 JB 1H 472K-T | B | 160.3/71.9 |
| C55 | 4030006880 | S.CER C1608 JB 1H 472K-T | B | 160.2/65.2 |
| C56 | 4030006880 | S.CER C1608 JB 1H 472K-T | T | 165.1/68.5 |
| C57 | 4030017800 | S.CER C1608 CH 1H 561J-T | B | 143.6/99.3 |
| C58 | 4030010760 | S.CER C1608 CH 1H 331J-T | B | 143.6/97.2 |
| C59 | 4030010760 | S.CER C1608 CH 1H 331J-T | B | 144.2/94.6 |
| C60 | 4030007080 | S.CER C1608 CH 1H 390J-T | B | 144.2/92.2 |
| C61 | 4030007100 | S.CER C1608 CH 1H 560J-T | B | 141.8/90.2 |
| C62 | 4030010760 | S.CER C1608 CH 1H 331J-T | B | 139.5/90.2 |
| C63 | 4030010760 | S.CER C1608 CH 1H 331J-T | B | 143.8/83 |
| C64 | 4030007090 | S.CER C1608 CH 1H 470J-T | B | 143.8/85.3 |
| C65 | 4030010760 | S.CER C1608 CH 1H 331J-T | B | 141.1/82 |
| C66 | 4030007100 | S.CER C1608 CH 1H 560J-T | B | 138.9/82 |
| C67 | 4030010760 | S.CER C1608 CH 1H 331J-T | B | 143.7/78.7 |
| C68 | 4030007080 | S.CER C1608 CH 1H 390J-T | B | 143.7/81.1 |
| C69 | 4030017800 | S.CER C1608 CH 1H 561J-T | B | 144/75.1 |
| C70 | 4030010760 | S.CER C1608 CH 1H 331J-T | B | 144/77.1 |
| C81 | 4030006880 | S.CER C1608 JB 1H 472K-T | B | 139.9/115 |
| C82 | 4030006880 | S.CER C1608 JB 1H 472K-T | B | 138.1/111.8 |
| C83 | 4030006880 | S.CER C1608 JB 1H 472K-T | B | 140.7/117 |
| C84 | 4030006880 | S.CER C1608 JB 1H 472K-T | B | 138.4/72.1 |
| C85 | 4030006880 | S.CER C1608 JB 1H 472K-T | B | 144.9/66.5 |
| C86 | 4030006880 | S.CER C1608 JB 1H 472K-T | B | 143/68.1 |
| C87 | 4030017800 | S.CER C1608 CH 1H 561J-T | B | 126.7/116.6 |
| C88 | 4030011330 | S.CER C1608 CH 1H 391J-T | B | 126.7/114.8 |
| C89 | 4030007160 | S.CER C1608 CH 1H 181J-T | B | 126.8/104.3 |
| C90 | 4030007070 | S.CER C1608 CH 1H 330J-T | B | 126.8/106.2 |
| C91 | 4030007030 | S.CER C1608 CH 1H 150J-T | B | 130.7/102.1 |
| C92 | 4030007120 | S.CER C1608 CH 1H 820J-T | B | 128.9/102.1 |
| C93 | 4030007140 | S.CER C1608 CH 1H 121J-T | B | 126.6/101.3 |
| C94 | 4030007100 | S.CER C1608 CH 1H 560J-T | B | 126.6/99.6 |
| C95 | 4030007120 | S.CER C1608 CH 1H 820J-T | B | 129.4/92.5 |
| C96 | 4030007030 | S.CER C1608 CH 1H 150J-T | B | 131.4/92.5 |
| C97 | 4030007160 | S.CER C1608 CH 1H 181J-T | B | 126.7/89.6 |
| C98 | 4030007070 | S.CER C1608 CH 1H 330J-T | B | 126.7/88 |
| C99 | 4030017800 | S.CER C1608 CH 1H 561J-T | B | 126.7/86.1 |
| C100 | 4030011330 | S.CER C1608 CH 1H 391J-T | B | 126.7/84.3 |
| C111 | 4030006880 | S.CER C1608 JB 1H 472K-T | B | 118.1/115.2 |
| C112 | 4030006880 | S.CER C1608 JB 1H 472K-T | B | 115.2/112.4 |
| C113 | 4030006880 | S.CER C1608 JB 1H 472K-T | B | 118.9/117.6 |
| C114 | 4030006880 | S.CER C1608 JB 1H 472K-T | B | 107.7/69.4 |
| C115 | 4030006880 | S.CER C1608 JB 1H 472K-T | B | 104.3/65.9 |
| C116 | 4030006880 | S.CER C1608 JB 1H 472K-T | T | 108.7/67.5 |
| C117 | 4030010760 | S.CER C1608 CH 1H 331J-T | B | 110.3/109.3 |
| C118 | 4030007150 | S.CER C1608 CH 1H 151J-T | B | 110.3/107.8 |
| C119 | 4030007150 | S.CER C1608 CH 1H 151J-T | B | 110.3/96.6 |
| C120 | 4030007060 | S.CER C1608 CH 1H 270J-T | B | 110.3/98.3 |
| C121 | 4030007060 | S.CER C1608 CH 1H 270J-T | B | 106.8/95 |
| C122 | 4030007140 | S.CER C1608 CH 1H 121J-T | B | 105.2/95 |
| C123 | 4030007150 | S.CER C1608 CH 1H 151J-T | B | 110.3/94.3 |
| C124 | 4030007010 | S.CER C1608 CH 1H 100D-T | B | 110.3/92.7 |
| C125 | 4030007140 | S.CER C1608 CH 1H 121J-T | B | 109.6/84.4 |
| C126 | 4030007060 | S.CER C1608 CH 1H 270J-T | B | 107.5/84.4 |
| C127 | 4030007150 | S.CER C1608 CH 1H 151J-T | B | 110.3/80.6 |
| C128 | 4030007060 | S.CER C1608 CH 1H 270J-T | B | 110.3/78.7 |
| C129 | 4030010760 | S.CER C1608 CH 1H 331J-T | B | 110.3/73.7 |
| C130 | 4030007150 | S.CER C1608 CH 1H 151J-T | B | 110.4/72 |
| C141 | 4030006880 | S.CER C1608 JB 1H 472K-T | B | 105.2/115.2 |
| C142 | 4030006880 | S.CER C1608 JB 1H 472K-T | B | 97.2/108.7 |
| C143 | 4030006880 | S.CER C1608 JB 1H 472K-T | B | 105.6/117.6 |
| C144 | 4030006880 | S.CER C1608 JB 1H 472K-T | B | 91/72.9 |
| C145 | 4030006880 | S.CER C1608 JB 1H 472K-T | B | 90.2/65.9 |
| C146 | 4030006880 | S.CER C1608 JB 1H 472K-T | T | 93.4/70.3 |
| C147 | 4030007170 | S.CER C1608 CH 1H 221J-T | B | 92.3/109.8 |
| C148 | 4030007170 | S.CER C1608 CH 1H 221J-T | B | 92.3/108 |
| C149 | 4030007130 | S.CER C1608 CH 1H 101J-T | B | 92.4/104.5 |
| C150 | 4030007050 | S.CER C1608 CH 1H 220J-T | B | 92.4/102.6 |
| C151 | 4030007070 | S.CER C1608 CH 1H 330J-T | B | 93.1/99.9 |
| C152 | 4030007080 | S.CER C1608 CH 1H 390J-T | B | 94.8/99.9 |
| C153 | 4030007120 | S.CER C1608 CH 1H 820J-T | B | 92.4/94.8 |
| C154 | 4030007050 | S.CER C1608 CH 1H 220J-T | B | 92.4/93.3 |
| C155 | 4030007080 | S.CER C1608 CH 1H 390J-T | B | 95.5/92.5 |
| C156 | 4030007070 | S.CER C1608 CH 1H 330J-T | B | 97.7/92.5 |
| C157 | 4030007130 | S.CER C1608 CH 1H 101J-T | B | 92.4/90.8 |
| C158 | 4030007050 | S.CER C1608 CH 1H 220J-T | B | 92.4/89.2 |
| C159 | 4030007170 | S.CER C1608 CH 1H 221J-T | B | 92.4/79.9 |
| C160 | 4030007170 | S.CER C1608 CH 1H 221J-T | B | 92.4/77.8 |
| C171 | 4030006880 | S.CER C1608 JB 1H 472K-T | B | 73.9/115.2 |
| C172 | 4030006880 | S.CER C1608 JB 1H 472K-T | B | 71.1/112.4 |
| C173 | 4030006880 | S.CER C1608 JB 1H 472K-T | B | 74.9/117.6 |
| C174 | 4030006880 | S.CER C1608 JB 1H 472K-T | B | 78.9/72.9 |
| C175 | 4030006880 | S.CER C1608 JB 1H 472K-T | B | 77.9/65.8 |
| C176 | 4030006880 | S.CER C1608 JB 1H 472K-T | B | 81.6/75.9 |
| C177 | 4030007170 | S.CER C1608 CH 1H 221J-T | B | 78.3/115.3 |
| C178 | 4030007110 | S.CER C1608 CH 1H 680J-T | B | 78.3/112.9 |
| C179 | 4030007090 | S.CER C1608 CH 1H 470J-T | B | 74.1/103.9 |
| C180 | 4030007090 | S.CER C1608 CH 1H 470J-T | B | 74.1/105.7 |
| C181 | 4030007070 | S.CER C1608 CH 1H 330J-T | B | 73.3/101.4 |
| C182 | 4030007070 | S.CER C1608 CH 1H 330J-T | B | 71.4/101.4 |
| C183 | 4030007120 | S.CER C1608 CH 1H 820J-T | B | 74.1/98.9 |
| C185 | 4030007070 | S.CER C1608 CH 1H 330J-T | B | 73.3/93.6 |
| C186 | 4030007070 | S.CER C1608 CH 1H 330J-T | B | 71.4/93.6 |
| C187 | 4030007090 | S.CER C1608 CH 1H 470J-T | B | 74.1/90.2 |
| C188 | 4030007090 | S.CER C1608 CH 1H 470J-T | B | 74.1/88.1 |
| C189 | 4030007170 | S.CER C1608 CH 1H 221J-T | B | 74.1/85.9 |
| C190 | 4030007110 | S.CER C1608 CH 1H 680J-T | B | 74.1/83.9 |
| C201 | 4030006880 | S.CER C1608 JB 1H 472K-T | B | 61.6/115.2 |
| C202 | 4030006880 | S.CER C1608 JB 1H 472K-T | B | 58.8/112.4 |

M.=Mounted side (T: Mounted on the Top side, B: Mounted on the Bottom side)
S.=Surface mount

## [BPF UNIT]

| REF NO. | ORDER NO. | DESCRIPTION | M. | H/V LOCATION |
|---|---|---|---|---|
| C203 | 4030006880 | S.CER C1608 JB 1H 472K-T | B | 58.2/116.1 |
| C204 | 4030006880 | S.CER C1608 JB 1H 472K-T | B | 66.4/76.6 |
| C205 | 4030006880 | S.CER C1608 JB 1H 472K-T | B | 71.2/80.2 |
| C206 | 4030006880 | S.CER C1608 JB 1H 472K-T | B | 70.2/74.8 |
| C207 | 4030007160 | S.CER C1608 CH 1H 181J-T | B | 57.7/103.6 |
| C208 | 4030007090 | S.CER C1608 CH 1H 470J-T | B | 57.7/102 |
| C209 | 4030007090 | S.CER C1608 CH 1H 470J-T | B | 64.8/95.3 |
| C210 | 4030007040 | S.CER C1608 CH 1H 180J-T | B | 63.2/95.3 |
| C211 | 4030007030 | S.CER C1608 CH 1H 150J-T | B | 60.8/94.5 |
| C212 | 4030007050 | S.CER C1608 CH 1H 220J-T | B | 60.8/92.9 |
| C213 | 4030007090 | S.CER C1608 CH 1H 470J-T | B | 57.7/92.9 |
| C214 | 4030006990 | S.CER C1608 CH 1H 080D-T | B | 57.7/94.5 |
| C215 | 4030007050 | S.CER C1608 CH 1H 220J-T | B | 60.1/85.1 |
| C216 | 4030007030 | S.CER C1608 CH 1H 150J-T | B | 58.5/85.1 |
| C217 | 4030007090 | S.CER C1608 CH 1H 470J-T | B | 57.7/82.7 |
| C218 | 4030007040 | S.CER C1608 CH 1H 180J-T | B | 57.7/81.1 |
| C219 | 4030007160 | S.CER C1608 CH 1H 181J-T | B | 57.7/79.5 |
| C220 | 4030007090 | S.CER C1608 CH 1H 470J-T | B | 57.7/77.9 |
| C231 | 4030006880 | S.CER C1608 JB 1H 472K-T | B | 39.4/115.3 |
| C232 | 4030006880 | S.CER C1608 JB 1H 472K-T | B | 36.6/112.4 |
| C233 | 4030006880 | S.CER C1608 JB 1H 472K-T | B | 40.3/117.5 |
| C234 | 4030006880 | S.CER C1608 JB 1H 472K-T | B | 46.2/73.5 |
| C235 | 4030006880 | S.CER C1608 JB 1H 472K-T | B | 49/69.2 |
| C236 | 4030006880 | S.CER C1608 JB 1H 472K-T | B | 50.4/69.1 |
| C237 | 4030007140 | S.CER C1608 CH 1H 121J-T | B | 41.2/109.8 |
| C238 | 4030007040 | S.CER C1608 CH 1H 180J-T | B | 41.2/108.2 |
| C239 | 4030007070 | S.CER C1608 CH 1H 330J-T | B | 41.2/103.8 |
| C240 | 4030007040 | S.CER C1608 CH 1H 180J-T | B | 41.2/102.2 |
| C241 | 4030007010 | S.CER C1608 CH 1H 100D-T | B | 40.5/99.8 |
| C242 | 4030007070 | S.CER C1608 CH 1H 330J-T | B | 38.9/99.8 |
| C243 | 4030007090 | S.CER C1608 CH 1H 470J-T | B | 41.2/94.8 |
| C245 | 4030007070 | S.CER C1608 CH 1H 330J-T | B | 40.5/91.3 |
| C246 | 4030007010 | S.CER C1608 CH 1H 100D-T | B | 38.9/91.3 |
| C247 | 4030007070 | S.CER C1608 CH 1H 330J-T | B | 41.2/88.9 |
| C248 | 4030007040 | S.CER C1608 CH 1H 180J-T | B | 41.2/87.3 |
| C249 | 4030007140 | S.CER C1608 CH 1H 121J-T | B | 41.2/85.7 |
| C250 | 4030007040 | S.CER C1608 CH 1H 180J-T | B | 41.2/84.1 |
| C261 | 4030006880 | S.CER C1608 JB 1H 472K-T | B | 27/115.2 |
| C262 | 4030006880 | S.CER C1608 JB 1H 472K-T | B | 24.3/112.4 |
| C263 | 4030006880 | S.CER C1608 JB 1H 472K-T | B | 29.7/111.6 |
| C264 | 4030006880 | S.CER C1608 JB 1H 472K-T | T | 36.5/70.9 |
| C265 | 4030006880 | S.CER C1608 JB 1H 472K-T | T | 36.6/67.9 |
| C266 | 4030006880 | S.CER C1608 JB 1H 472K-T | B | 36.7/70 |
| C267 | 4030007130 | S.CER C1608 CH 1H 101J-T | B | 23.2/103.5 |
| C268 | 4030007030 | S.CER C1608 CH 1H 150J-T | B | 23.2/101.9 |
| C269 | 4030007050 | S.CER C1608 CH 1H 220J-T | B | 30.3/95.3 |
| C270 | 4030007020 | S.CER C1608 CH 1H 120J-T | B | 28.7/95.3 |
| C271 | 4030007050 | S.CER C1608 CH 1H 220J-T | B | 26.3/94.5 |
| C273 | 4030007050 | S.CER C1608 CH 1H 220J-T | B | 23.2/94.5 |
| C274 | 4030006980 | S.CER C1608 CH 1H 070D-T | B | 23.2/92.9 |
| C275 | 4030007050 | S.CER C1608 CH 1H 220J-T | B | 24/85.1 |
| C277 | 4030007050 | S.CER C1608 CH 1H 220J-T | B | 23.2/81.1 |
| C278 | 4030007020 | S.CER C1608 CH 1H 120J-T | B | 23.2/82.7 |
| C279 | 4030007130 | S.CER C1608 CH 1H 101J-T | B | 23.3/73.6 |
| C280 | 4030007030 | S.CER C1608 CH 1H 150J-T | B | 23.3/77.9 |
| C291 | 4030006880 | S.CER C1608 JB 1H 472K-T | B | 218.9/73.3 |
| C292 | 4030006880 | S.CER C1608 JB 1H 472K-T | B | 214.4/77.4 |
| C293 | 4030006880 | S.CER C1608 JB 1H 472K-T | B | 222.7/76.6 |
| C294 | 4030006880 | S.CER C1608 JB 1H 472K-T | B | 209.7/73 |
| C295 | 4030006880 | S.CER C1608 JB 1H 472K-T | B | 207.6/77.5 |
| C296 | 4030006880 | S.CER C1608 JB 1H 472K-T | B | 203.9/73.5 |
| C297 | 4030007150 | S.CER C1608 CH 1H 151J-T | T | 213/79.9 |
| C302 | 4030007030 | S.CER C1608 CH 1H 150J-T | T | 210.2/82.7 |
| C303 | 4030007130 | S.CER C1608 CH 1H 101J-T | T | 211.7/79.9 |
| C304 | 4030007040 | S.CER C1608 CH 1H 180J-T | T | 208.4/79.9 |
| C321 | 4030006880 | S.CER C1608 JB 1H 472K-T | T | 218.8/97.4 |
| C322 | 4030006880 | S.CER C1608 JB 1H 472K-T | T | 218.8/98.7 |
| C323 | 4030006880 | S.CER C1608 JB 1H 472K-T | B | 213/91 |
| C324 | 4030006880 | S.CER C1608 JB 1H 472K-T | B | 209.3/90.7 |
| C325 | 4030006880 | S.CER C1608 JB 1H 472K-T | T | 206.6/98.8 |
| C326 | 4030006880 | S.CER C1608 JB 1H 472K-T | T | 204/98.8 |
| C327 | 4030007100 | S.CER C1608 CH 1H 560J-T | T | 210.7/90.3 |
| C329 | 4030007110 | S.CER C1608 CH 1H 680J-T | T | 208.1/90.3 |
| C331 | 4030007100 | S.CER C1608 CH 1H 560J-T | T | 208.8/96.6 |
| C353 | 4030006880 | S.CER C1608 JB 1H 472K-T | B | 189.1/91.2 |
| C354 | 4030006880 | S.CER C1608 JB 1H 472K-T | B | 189.5/94.6 |
| C355 | 4030006880 | S.CER C1608 JB 1H 472K-T | T | 189/92.4 |
| C356 | 4030006880 | S.CER C1608 JB 1H 472K-T | B | 189.5/86.4 |
| C357 | 4030006880 | S.CER C1608 JB 1H 472K-T | T | 189/86.1 |
| C358 | 4030006880 | S.CER C1608 JB 1H 472K-T | B | 189.1/89.1 |
| C359 | 4030006880 | S.CER C1608 JB 1H 472K-T | T | 189/79.9 |
| C360 | 4030006880 | S.CER C1608 JB 1H 472K-T | B | 189.5/80.2 |
| C361 | 4030006880 | S.CER C1608 JB 1H 472K-T | B | 189.5/83 |
| C362 | 4030006880 | S.CER C1608 JB 1H 472K-T | T | 189/73.7 |
| C363 | 4030006880 | S.CER C1608 JB 1H 472K-T | B | 189.5/74 |
| C364 | 4030006880 | S.CER C1608 JB 1H 472K-T | B | 189.5/76.8 |
| C365 | 4030006880 | S.CER C1608 JB 1H 472K-T | T | 194/68.8 |
| C371 | 4030006880 | S.CER C1608 JB 1H 472K-T | T | 215.9/69.9 |
| C388 | 4030006880 | S.CER C1608 JB 1H 472K-T | B | 239.8/114.3 |
| C389 | 4030010210 | S.CER C3216 JB 1C 105M-T | B | 247.3/111.1 |
| C390 | 4030011600 | S.CER C1608 JB 1E 104K-T | T | 226.2/49.8 |
| C391 | 4030011600 | S.CER C1608 JB 1E 104K-T | B | 237.5/53.2 |
| C392 | 4030011600 | S.CER C1608 JB 1E 104K-T | T | 228.9/62.5 |
| C393 | 4030008860 | S.CER C1608 JB 1H 153K-T | B | 233.2/45.5 |
| C394 | 4030010210 | S.CER C3216 JB 1C 105M-T | B | 235.1/59.6 |
| C395 | 4030008860 | S.CER C1608 JB 1H 153K-T | B | 233.2/40 |
| C396 | 4030011600 | S.CER C1608 JB 1E 104K-T | B | 235.5/43.8 |
| C397 | 4550006470 | S.TAN TEESVB2 1D 106M8R | B | 227/44 |
| C398 | 4030011600 | S.CER C1608 JB 1E 104K-T | T | 5.4/102.8 |
| C399 | 4030011600 | S.CER C1608 JB 1E 104K-T | T | 5.3/77.8 |
| C401 | 4030006880 | S.CER C1608 JB 1H 472K-T | B | 223.9/95.5 |
| C402 | 4030010210 | S.CER C3216 JB 1C 105M-T | B | 234/107.1 |
| C403 | 4030009520 | S.CER C1608 CH 1H 020B-T | B | 233.9/109.3 |
| C404 | 4030007050 | S.CER C1608 CH 1H 220J-T | B | 233.9/110.9 |

## [BPF UNIT]

| REF NO. | ORDER NO. | DESCRIPTION | M. | H/V LOCATION |
|---|---|---|---|---|
| C405 | 4030010760 | S.CER C1608 CH 1H 331J-T | B | 236.1/113.4 |
| C498 | 4030011600 | S.CER C1608 JB 1E 104K-T | T | 5.3/60.4 |
| C499 | 4030011600 | S.CER C1608 JB 1E 104K-T | T | 6.1/39.7 |
| C501 | 4030006880 | S.CER C1608 JB 1H 472K-T | B | 184.9/22 |
| C502 | 4030006880 | S.CER C1608 JB 1H 472K-T | B | 181.6/22 |
| C503 | 4030006880 | S.CER C1608 JB 1H 472K-T | B | 183.9/31.7 |
| C504 | 4030006880 | S.CER C1608 JB 1H 472K-T | B | 183.7/54.7 |
| C505 | 4030006880 | S.CER C1608 JB 1H 472K-T | T | 185.3/47.1 |
| C506 | 4030006880 | S.CER C1608 JB 1H 472K-T | B | 184.1/47.2 |
| C507 | 4030017840 | S.CER C2012 CH 1H 222J-T | T | 183/35.4 |
| C508 | 4030017850 | S.CER C2012 CH 1H 272J-T | T | 182.9/37.7 |
| C509 | 4030017820 | S.CER C2012 CH 1H 122J-T | T | 182.9/39.5 |
| C510 | 4030017840 | S.CER C2012 CH 1H 222J-T | T | 182.9/44.3 |
| C531 | 4030006880 | S.CER C1608 JB 1H 472K-T | B | 165.7/5.6 |
| C532 | 4030006880 | S.CER C1608 JB 1H 472K-T | B | 165.2/2.3 |
| C533 | 4030006880 | S.CER C1608 JB 1H 472K-T | B | 164.5/9 |
| C534 | 4030006880 | S.CER C1608 JB 1H 472K-T | B | 164/54.6 |
| C535 | 4030006880 | S.CER C1608 JB 1H 472K-T | B | 167.7/49.6 |
| C536 | 4030006880 | S.CER C1608 JB 1H 472K-T | B | 169.4/53.7 |
| C537 | 4030017810 | S.CER C1608 CH 1H 102J-T | B | 168.6/20.1 |
| C538 | 4030017810 | S.CER C1608 CH 1H 102J-T | B | 168.6/21.9 |
| C539 | 4030010760 | S.CER C1608 CH 1H 331J-T | B | 168.3/24.5 |
| C540 | 4030007140 | S.CER C1608 CH 1H 121J-T | B | 168.3/26.7 |
| C541 | 4030007160 | S.CER C1608 CH 1H 181J-T | B | 165.3/27.6 |
| C542 | 4030007060 | S.CER C1608 CH 1H 270J-T | B | 162.5/27.7 |
| C543 | 4030010760 | S.CER C1608 CH 1H 331J-T | B | 168.3/28.8 |
| C544 | 4030007090 | S.CER C1608 CH 1H 470J-T | B | 168.3/30.6 |
| C545 | 4030007160 | S.CER C1608 CH 1H 181J-T | B | 162.9/34.2 |
| C546 | 4030007060 | S.CER C1608 CH 1H 270J-T | B | 164.9/34.1 |
| C547 | 4030010760 | S.CER C1608 CH 1H 331J-T | B | 168.1/35.1 |
| C548 | 4030007140 | S.CER C1608 CH 1H 121J-T | B | 168.1/36.7 |
| C549 | 4030017810 | S.CER C1608 CH 1H 102J-T | B | 170.3/43.4 |
| C550 | 4030017810 | S.CER C1608 CH 1H 102J-T | B | 170.3/45.9 |
| C561 | 4030006880 | S.CER C1608 JB 1H 472K-T | B | 153/8 |
| C562 | 4030006880 | S.CER C1608 JB 1H 472K-T | B | 153/11.9 |
| C563 | 4030006880 | S.CER C1608 JB 1H 472K-T | B | 152/10 |
| C564 | 4030006880 | S.CER C1608 JB 1H 472K-T | T | 161.4/46.3 |
| C565 | 4030006880 | S.CER C1608 JB 1H 472K-T | B | 162.2/38.8 |
| C566 | 4030006880 | S.CER C1608 JB 1H 472K-T | T | 165.5/42.4 |
| C567 | 4030017800 | S.CER C1608 CH 1H 561J-T | B | 147.9/17.4 |
| C568 | 4030010760 | S.CER C1608 CH 1H 331J-T | B | 148.5/15.2 |
| C569 | 4030010760 | S.CER C1608 CH 1H 331J-T | B | 144.6/25.7 |
| C570 | 4030007080 | S.CER C1608 CH 1H 390J-T | B | 144.6/27.4 |
| C571 | 4030007100 | S.CER C1608 CH 1H 560J-T | B | 141.6/28.1 |
| C572 | 4030010760 | S.CER C1608 CH 1H 331J-T | B | 139.8/28.1 |
| C573 | 4030010760 | S.CER C1608 CH 1H 331J-T | B | 144.3/34.2 |
| C574 | 4030007090 | S.CER C1608 CH 1H 470J-T | B | 144.3/35.7 |
| C575 | 4030010760 | S.CER C1608 CH 1H 331J-T | B | 141.5/38.6 |
| C576 | 4030007100 | S.CER C1608 CH 1H 560J-T | B | 139.8/38.6 |
| C577 | 4030010760 | S.CER C1608 CH 1H 331J-T | B | 144.3/43.2 |
| C578 | 4030007080 | S.CER C1608 CH 1H 390J-T | B | 144.3/40.9 |
| C579 | 4030017800 | S.CER C1608 CH 1H 561J-T | B | 149.7/45.2 |
| C580 | 4030010760 | S.CER C1608 CH 1H 331J-T | B | 147.9/45.2 |
| C591 | 4030006880 | S.CER C1608 JB 1H 472K-T | B | 140.2/5.1 |
| C592 | 4030006880 | S.CER C1608 JB 1H 472K-T | B | 142.2/5.1 |
| C593 | 4030006880 | S.CER C1608 JB 1H 472K-T | B | 133/8.5 |
| C594 | 4030006880 | S.CER C1608 JB 1H 472K-T | B | 140.4/54.3 |
| C595 | 4030006880 | S.CER C1608 JB 1H 472K-T | B | 148.6/52.7 |
| C596 | 4030006880 | S.CER C1608 JB 1H 472K-T | B | 146/53.4 |
| C597 | 4030017800 | S.CER C1608 CH 1H 561J-T | B | 126.7/3.2 |
| C598 | 4030011330 | S.CER C1608 CH 1H 391J-T | B | 126.7/5.4 |
| C599 | 4030007160 | S.CER C1608 CH 1H 181J-T | B | 126.7/15.1 |
| C600 | 4030007070 | S.CER C1608 CH 1H 330J-T | B | 126.7/17.3 |
| C601 | 4030007030 | S.CER C1608 CH 1H 150J-T | B | 129.6/18.2 |
| C602 | 4030007120 | S.CER C1608 CH 1H 820J-T | B | 131.6/18.2 |
| C603 | 4030007140 | S.CER C1608 CH 1H 121J-T | B | 126.8/20.5 |
| C604 | 4030007100 | S.CER C1608 CH 1H 560J-T | B | 126.8/18.9 |
| C605 | 4030007120 | S.CER C1608 CH 1H 820J-T | B | 131.4/26.8 |
| C606 | 4030007030 | S.CER C1608 CH 1H 150J-T | B | 129.6/26.8 |
| C607 | 4030007160 | S.CER C1608 CH 1H 181J-T | B | 127.3/29 |
| C608 | 4030007070 | S.CER C1608 CH 1H 330J-T | B | 127.3/31.3 |
| C609 | 4030017800 | S.CER C1608 CH 1H 561J-T | B | 127.3/33.3 |
| C610 | 4030011330 | S.CER C1608 CH 1H 391J-T | B | 127.3/35.5 |
| C621 | 4030006880 | S.CER C1608 JB 1H 472K-T | B | 118.5/4.7 |
| C622 | 4030006880 | S.CER C1608 JB 1H 472K-T | B | 121.2/4 |
| C623 | 4030006880 | S.CER C1608 JB 1H 472K-T | B | 113.8/8.2 |
| C624 | 4030006880 | S.CER C1608 JB 1H 472K-T | T | 110.3/54.1 |
| C625 | 4030006880 | S.CER C1608 JB 1H 472K-T | B | 107.4/51.4 |
| C626 | 4030006880 | S.CER C1608 JB 1H 472K-T | T | 109/52.6 |
| C627 | 4030010760 | S.CER C1608 CH 1H 331J-T | B | 109.3/17.8 |
| C628 | 4030007150 | S.CER C1608 CH 1H 151J-T | B | 109.3/19.7 |
| C629 | 4030007150 | S.CER C1608 CH 1H 151J-T | B | 109.2/21.7 |
| C630 | 4030007060 | S.CER C1608 CH 1H 270J-T | B | 109.2/23.6 |
| C631 | 4030007060 | S.CER C1608 CH 1H 270J-T | B | 105.2/25.8 |
| C632 | 4030007140 | S.CER C1608 CH 1H 121J-T | B | 106.9/25.8 |
| C633 | 4030007150 | S.CER C1608 CH 1H 151J-T | B | 109.3/33.9 |
| C634 | 4030007010 | S.CER C1608 CH 1H 100D-T | B | 109.3/31.7 |
| C635 | 4030007140 | S.CER C1608 CH 1H 121J-T | B | 108.5/37.9 |
| C636 | 4030007060 | S.CER C1608 CH 1H 270J-T | B | 105.9/37.9 |
| C637 | 4030007150 | S.CER C1608 CH 1H 151J-T | B | 109.3/40.4 |
| C638 | 4030007060 | S.CER C1608 CH 1H 270J-T | B | 109.3/42.2 |
| C639 | 4030010760 | S.CER C1608 CH 1H 331J-T | B | 110.2/46.5 |
| C640 | 4030007150 | S.CER C1608 CH 1H 151J-T | B | 110.2/48.5 |
| C651 | 4030006880 | S.CER C1608 JB 1H 472K-T | B | 105.1/7.8 |
| C652 | 4030006880 | S.CER C1608 JB 1H 472K-T | B | 105.1/4.1 |
| C653 | 4030006880 | S.CER C1608 JB 1H 472K-T | B | 103/10.2 |
| C654 | 4030006880 | S.CER C1608 JB 1H 472K-T | T | 90.4/54.2 |
| C655 | 4030006880 | S.CER C1608 JB 1H 472K-T | B | 92.1/46.9 |
| C656 | 4030006880 | S.CER C1608 JB 1H 472K-T | T | 93.5/49.6 |
| C657 | 4030007170 | S.CER C1608 CH 1H 221J-T | B | 92.2/6 |
| C658 | 4030007170 | S.CER C1608 CH 1H 221J-T | B | 92.2/4.4 |
| C659 | 4030007130 | S.CER C1608 CH 1H 101J-T | B | 92.5/14.8 |
| C660 | 4030007050 | S.CER C1608 CH 1H 220J-T | B | 92.5/17 |
| C661 | 4030007070 | S.CER C1608 CH 1H 330J-T | B | 95.2/19.6 |

M.=Mounted side (T: Mounted on the Top side, B: Mounted on the Bottom side)
S.=Surface mount

## [BPF UNIT]

| REF NO. | ORDER NO. | DESCRIPTION | M. | H/V LOCATION |
|---|---|---|---|---|
| C662 | 4030007080 | S.CER C1608 CH 1H 390J-T | B | 93.2/19.6 |
| C663 | 4030007120 | S.CER C1608 CH 1H 820J-T | B | 92.6/27.6 |
| C664 | 4030007050 | S.CER C1608 CH 1H 220J-T | B | 92.6/25.4 |
| C665 | 4030007080 | S.CER C1608 CH 1H 390J-T | B | 95.7/28.3 |
| C666 | 4030007070 | S.CER C1608 CH 1H 330J-T | B | 97.5/28.3 |
| C667 | 4030007130 | S.CER C1608 CH 1H 101J-T | B | 92.2/29.9 |
| C668 | 4030007050 | S.CER C1608 CH 1H 220J-T | B | 92.2/31.8 |
| C669 | 4030007170 | S.CER C1608 CH 1H 221J-T | B | 92.2/33.5 |
| C670 | 4030007170 | S.CER C1608 CH 1H 221J-T | B | 92.2/35.6 |
| C681 | 4030006880 | S.CER C1608 JB 1H 472K-T | B | 74.4/5.1 |
| C682 | 4030006880 | S.CER C1608 JB 1H 472K-T | B | 77.1/3.1 |
| C683 | 4030006880 | S.CER C1608 JB 1H 472K-T | B | 71.5/8.1 |
| C684 | 4030006880 | S.CER C1608 JB 1H 472K-T | T | 78.9/54.1 |
| C685 | 4030006880 | S.CER C1608 JB 1H 472K-T | B | 79.1/46.9 |
| C686 | 4030006880 | S.CER C1608 JB 1H 472K-T | B | 81.6/44 |
| C687 | 4030007170 | S.CER C1608 CH 1H 221J-T | B | 75.5/11 |
| C688 | 4030007110 | S.CER C1608 CH 1H 680J-T | B | 75.5/13.4 |
| C689 | 4030007090 | S.CER C1608 CH 1H 470J-T | B | 70.8/15.2 |
| C690 | 4030007090 | S.CER C1608 CH 1H 470J-T | B | 73/15.2 |
| C691 | 4030007070 | S.CER C1608 CH 1H 330J-T | B | 71/18.7 |
| C692 | 4030007070 | S.CER C1608 CH 1H 330J-T | B | 73/18.7 |
| C693 | 4030007120 | S.CER C1608 CH 1H 820J-T | B | 75.7/21.1 |
| C695 | 4030007070 | S.CER C1608 CH 1H 330J-T | B | 72.6/27 |
| C696 | 4030007070 | S.CER C1608 CH 1H 330J-T | B | 70.9/27 |
| C697 | 4030007090 | S.CER C1608 CH 1H 470J-T | B | 75.6/29.6 |
| C698 | 4030007090 | S.CER C1608 CH 1H 470J-T | B | 75.6/31.7 |
| C699 | 4030007170 | S.CER C1608 CH 1H 221J-T | B | 75.6/35.8 |
| C700 | 4030007110 | S.CER C1608 CH 1H 680J-T | B | 75.6/33.9 |
| C711 | 4030006880 | S.CER C1608 JB 1H 472K-T | B | 62/5.2 |
| C712 | 4030006880 | S.CER C1608 JB 1H 472K-T | B | 63/7.9 |
| C713 | 4030006880 | S.CER C1608 JB 1H 472K-T | B | 58.6/8.3 |
| C714 | 4030006880 | S.CER C1608 JB 1H 472K-T | T | 68.2/54.2 |
| C715 | 4030006880 | S.CER C1608 JB 1H 472K-T | B | 68.4/42.7 |
| C716 | 4030006880 | S.CER C1608 JB 1H 472K-T | B | 70/46.3 |
| C717 | 4030007160 | S.CER C1608 CH 1H 181J-T | B | 57.7/20.1 |
| C718 | 4030007090 | S.CER C1608 CH 1H 470J-T | B | 57.7/17.6 |
| C719 | 4030007090 | S.CER C1608 CH 1H 470J-T | B | 57.4/23.2 |
| C720 | 4030007040 | S.CER C1608 CH 1H 180J-T | B | 57.4/25.2 |
| C721 | 4030007030 | S.CER C1608 CH 1H 150J-T | B | 61/27 |
| C722 | 4030007050 | S.CER C1608 CH 1H 220J-T | B | 63.2/27 |
| C723 | 4030007090 | S.CER C1608 CH 1H 470J-T | B | 57.7/33.7 |
| C724 | 4030006990 | S.CER C1608 CH 1H 080D-T | B | 57.7/31.6 |
| C725 | 4030007050 | S.CER C1608 CH 1H 220J-T | B | 63.3/37.6 |
| C726 | 4030007030 | S.CER C1608 CH 1H 150J-T | B | 61.3/37.6 |
| C727 | 4030007090 | S.CER C1608 CH 1H 470J-T | B | 57.7/38.3 |
| C728 | 4030007040 | S.CER C1608 CH 1H 180J-T | B | 57.7/40.6 |
| C729 | 4030007160 | S.CER C1608 CH 1H 181J-T | B | 57.7/46.2 |
| C730 | 4030007090 | S.CER C1608 CH 1H 470J-T | B | 57.7/48.6 |
| C741 | 4030006880 | S.CER C1608 JB 1H 472K-T | B | 40.8/5.4 |
| C742 | 4030006880 | S.CER C1608 JB 1H 472K-T | B | 42.7/3.4 |
| C743 | 4030006880 | S.CER C1608 JB 1H 472K-T | B | 37/8 |
| C744 | 4030006880 | S.CER C1608 JB 1H 472K-T | T | 46.2/54.2 |
| C745 | 4030006880 | S.CER C1608 JB 1H 472K-T | T | 46.2/46.6 |
| C746 | 4030006880 | S.CER C1608 JB 1H 472K-T | B | 49.5/50.4 |
| C747 | 4030007140 | S.CER C1608 CH 1H 121J-T | B | 41.2/13.3 |
| C748 | 4030007040 | S.CER C1608 CH 1H 180J-T | B | 41.2/10.8 |
| C749 | 4030007070 | S.CER C1608 CH 1H 330J-T | B | 41/18.4 |
| C750 | 4030007040 | S.CER C1608 CH 1H 180J-T | B | 41/16.4 |
| C751 | 4030007010 | S.CER C1608 CH 1H 100D-T | B | 35.3/17.1 |
| C752 | 4030007070 | S.CER C1608 CH 1H 330J-T | B | 37.5/17.1 |
| C753 | 4030007090 | S.CER C1608 CH 1H 470J-T | B | 41/20.3 |
| C755 | 4030007070 | S.CER C1608 CH 1H 330J-T | B | 35.4/25.5 |
| C756 | 4030007010 | S.CER C1608 CH 1H 100D-T | B | 37.5/25.5 |
| C757 | 4030007070 | S.CER C1608 CH 1H 330J-T | B | 41/27.5 |
| C758 | 4030007040 | S.CER C1608 CH 1H 180J-T | B | 41.1/29.4 |
| C759 | 4030007140 | S.CER C1608 CH 1H 121J-T | B | 41.2/32.6 |
| C760 | 4030007040 | S.CER C1608 CH 1H 180J-T | B | 41.2/34.9 |
| C771 | 4030006880 | S.CER C1608 JB 1H 472K-T | B | 27.6/5.5 |
| C772 | 4030006880 | S.CER C1608 JB 1H 472K-T | B | 29.2/8.5 |
| C773 | 4030006880 | S.CER C1608 JB 1H 472K-T | B | 23.5/8.2 |
| C774 | 4030006880 | S.CER C1608 JB 1H 472K-T | T | 35.9/54.4 |
| C775 | 4030006880 | S.CER C1608 JB 1H 472K-T | B | 34.2/44.5 |
| C776 | 4030006880 | S.CER C1608 JB 1H 472K-T | B | 36.4/46.1 |
| C777 | 4030007130 | S.CER C1608 CH 1H 101J-T | B | 24.1/20 |
| C778 | 4030007030 | S.CER C1608 CH 1H 150J-T | B | 24.1/17.9 |
| C779 | 4030007050 | S.CER C1608 CH 1H 220J-T | B | 24/23.6 |
| C780 | 4030007020 | S.CER C1608 CH 1H 120J-T | B | 23.9/25.6 |
| C781 | 4030007050 | S.CER C1608 CH 1H 220J-T | B | 27.5/26.4 |
| C783 | 4030007050 | S.CER C1608 CH 1H 220J-T | B | 24.2/32.3 |
| C784 | 4030006980 | S.CER C1608 CH 1H 070D-T | B | 24.2/34.3 |
| C785 | 4030007050 | S.CER C1608 CH 1H 220J-T | B | 27.8/37.7 |
| C787 | 4030007050 | S.CER C1608 CH 1H 220J-T | B | 24.5/38.5 |
| C788 | 4030007020 | S.CER C1608 CH 1H 120J-T | B | 24.5/40.7 |
| C789 | 4030007130 | S.CER C1608 CH 1H 101J-T | B | 24/46.8 |
| C790 | 4030007030 | S.CER C1608 CH 1H 150J-T | B | 24.1/49.1 |
| C801 | 4030006880 | S.CER C1608 JB 1H 472K-T | B | 218.8/46.3 |
| C802 | 4030006880 | S.CER C1608 JB 1H 472K-T | B | 223/44.4 |
| C803 | 4030006880 | S.CER C1608 JB 1H 472K-T | B | 211.6/44.7 |
| C804 | 4030006880 | S.CER C1608 JB 1H 472K-T | B | 208.8/27.5 |
| C805 | 4030006880 | S.CER C1608 JB 1H 472K-T | B | 208.3/43.7 |
| C806 | 4030006880 | S.CER C1608 JB 1H 472K-T | B | 203.8/46.1 |
| C813 | 4030007150 | S.CER C1608 CH 1H 151J-T | T | 212.6/41.2 |
| C816 | 4030007030 | S.CER C1608 CH 1H 150J-T | T | 213.7/39.1 |
| C820 | 4030007130 | S.CER C1608 CH 1H 101J-T | T | 211.3/39.8 |
| C821 | 4030007040 | S.CER C1608 CH 1H 180J-T | T | 208/39.8 |
| C831 | 4030006880 | S.CER C1608 JB 1H 472K-T | T | 218.9/22.1 |
| C832 | 4030006880 | S.CER C1608 JB 1H 472K-T | T | 218.9/20.8 |
| C833 | 4030006880 | S.CER C1608 JB 1H 472K-T | B | 214.5/27.5 |
| C834 | 4030006880 | S.CER C1608 JB 1H 472K-T | B | 209.8/46.9 |
| C835 | 4030006880 | S.CER C1608 JB 1H 472K-T | T | 201/20.7 |
| C836 | 4030006880 | S.CER C1608 JB 1H 472K-T | T | 203.7/20.7 |
| C837 | 4030007100 | S.CER C1608 CH 1H 560J-T | T | 212/30 |
| C839 | 4030007110 | S.CER C1608 CH 1H 680J-T | T | 207.9/30 |
| C841 | 4030007100 | S.CER C1608 CH 1H 560J-T | T | 208.7/25.1 |

## [BPF UNIT]

| REF NO. | ORDER NO. | DESCRIPTION | M. | H/V LOCATION |
|---|---|---|---|---|
| C853 | 4030006880 | S.CER C1608 JB 1H 472K-T | B | 188.8/25.1 |
| C854 | 4030006880 | S.CER C1608 JB 1H 472K-T | B | 189.5/27.6 |
| C855 | 4030006880 | S.CER C1608 JB 1H 472K-T | T | 189/25.3 |
| C856 | 4030006880 | S.CER C1608 JB 1H 472K-T | B | 189.5/30.5 |
| C857 | 4030006880 | S.CER C1608 JB 1H 472K-T | T | 189/30.5 |
| C858 | 4030006880 | S.CER C1608 JB 1H 472K-T | B | 189.5/33.8 |
| C859 | 4030006880 | S.CER C1608 JB 1H 472K-T | T | 189/36.7 |
| C860 | 4030006880 | S.CER C1608 JB 1H 472K-T | B | 189.5/37.2 |
| C861 | 4030006880 | S.CER C1608 JB 1H 472K-T | B | 189.5/40 |
| C862 | 4030006880 | S.CER C1608 JB 1H 472K-T | T | 189/42.9 |
| C863 | 4030006880 | S.CER C1608 JB 1H 472K-T | B | 189.5/42.9 |
| C864 | 4030006880 | S.CER C1608 JB 1H 472K-T | B | 189.5/45.8 |
| C865 | 4030006880 | S.CER C1608 JB 1H 472K-T | T | 194/50.2 |
| C876 | 4030006880 | S.CER C1608 JB 1H 472K-T | B | 241.3/19.5 |
| C878 | 4030010760 | S.CER C1608 CH 1H 331J-T | B | 245.1/17.9 |
| C879 | 4030007050 | S.CER C1608 CH 1H 220J-T | B | 245.1/19.5 |
| C880 | 4030009520 | S.CER C1608 CH 1H 020B-T | B | 247.9/19.5 |
| C881 | 4030010210 | S.CER C3216 JB 1C 105M-T | B | 244/34 |
| C900 | 4030006880 | S.CER C1608 JB 1H 472K-T | B | 215.5/99.5 |
| C901 | 4030005110 | S.CER C2012 JB 1E 473K-T | T | 15.1/26.8 |
| C902 | 4510008520 | S.ELE EEE1CA470SP | T | 12.3/21.7 |
| C903 | 4030005110 | S.CER C2012 JB 1E 473K-T | B | 12.3/12.9 |
| C904 | 4510009150 | S.ELE EEE1EA470WP | T | 12.3/13.4 |
| C905 | 4030006880 | S.CER C1608 JB 1H 472K-T | B | 244.7/94 |
| C906 | 4030006880 | S.CER C1608 JB 1H 472K-T | B | 244.7/91.2 |
| C907 | 4030006900 | S.CER C1608 JB 1H 103K-T | B | 213.8/106.2 |
| C908 | 4030011600 | S.CER C1608 JB 1E 104K-T | B | 212.8/115.6 |
| C909 | 4030006880 | S.CER C1608 JB 1H 472K-T | B | 218.7/113.5 |
| C910 | 4030006900 | S.CER C1608 JB 1H 103K-T | B | 215.5/117.9 |
| C911 | 4030006900 | S.CER C1608 JB 1H 103K-T | B | 210.6/106.3 |
| C912 | 4030006880 | S.CER C1608 JB 1H 472K-T | B | 201.9/99.6 |
| C914 | 4030006880 | S.CER C1608 JB 1H 472K-T | B | 194.7/99.4 |
| C915 | 4030006900 | S.CER C1608 JB 1H 103K-T | B | 192.6/110.6 |
| C916 | 4030006880 | S.CER C1608 JB 1H 472K-T | T | 200.3/118.3 |
| C917 | 4030006900 | S.CER C1608 JB 1H 103K-T | T | 197.8/117.6 |
| C918 | 4030006900 | S.CER C1608 JB 1H 103K-T | B | 187.3/106.3 |
| C919 | 4030006880 | S.CER C1608 JB 1H 472K-T | B | 180/99.9 |
| C921 | 4030006880 | S.CER C1608 JB 1H 472K-T | T | 201.6/118.3 |
| C922 | 4030011600 | S.CER C1608 JB 1E 104K-T | T | 208.5/117.4 |
| C923 | 4030011600 | S.CER C1608 JB 1E 104K-T | T | 212.3/117.4 |
| C924 | 4030011600 | S.CER C1608 JB 1E 104K-T | B | 192.9/116.4 |
| C925 | 4030011600 | S.CER C1608 JB 1E 104K-T | T | 187.7/117.4 |
| C926 | 4030011600 | S.CER C1608 JB 1E 104K-T | T | 191.6/117.5 |
| C927 | 4030006960 | S.CER C1608 CH 1H 050C-T | B | 209.4/113.7 |
| C928 | 4030006960 | S.CER C1608 CH 1H 050C-T | B | 187.5/114.2 |
| C950 | 4030006880 | S.CER C1608 JB 1H 472K-T | B | 206.3/4.6 |
| C951 | 4030006900 | S.CER C1608 JB 1H 103K-T | B | 215.7/17.8 |
| C952 | 4030011600 | S.CER C1608 JB 1E 104K-T | B | 211.9/20 |
| C953 | 4030006880 | S.CER C1608 JB 1H 472K-T | B | 205.3/2.8 |
| C954 | 4030006900 | S.CER C1608 JB 1H 103K-T | B | 218.6/2.5 |
| C955 | 4030006900 | S.CER C1608 JB 1H 103K-T | B | 208.6/11.4 |
| C956 | 4030006880 | S.CER C1608 JB 1H 472K-T | T | 203.5/2.3 |
| C958 | 4030006880 | S.CER C1608 JB 1H 472K-T | B | 190/4.9 |
| C959 | 4030006900 | S.CER C1608 JB 1H 103K-T | B | 195.2/16.5 |
| C960 | 4030006880 | S.CER C1608 JB 1H 472K-T | B | 196.3/2.3 |
| C961 | 4030006900 | S.CER C1608 JB 1H 103K-T | B | 202.2/4 |
| C962 | 4030006900 | S.CER C1608 JB 1H 103K-T | B | 184/16.5 |
| C963 | 4030006880 | S.CER C1608 JB 1H 472K-T | B | 181/3.9 |
| C965 | 4030006880 | S.CER C1608 JB 1H 472K-T | T | 208.4/3.9 |
| C967 | 4030011600 | S.CER C1608 JB 1E 104K-T | T | 209/21.4 |
| C968 | 4030011600 | S.CER C1608 JB 1E 104K-T | T | 213/21.4 |
| C969 | 4030011600 | S.CER C1608 JB 1E 104K-T | B | 191.6/19.9 |
| C970 | 4030011600 | S.CER C1608 JB 1E 104K-T | T | 187.9/21.4 |
| C971 | 4030011600 | S.CER C1608 JB 1E 104K-T | T | 193/19.8 |
| C972 | 4030006960 | S.CER C1608 CH 1H 050C-T | B | 208.3/19.3 |
| C973 | 4030006960 | S.CER C1608 CH 1H 050C-T | B | 187.7/19.3 |
| C974 | 4030006880 | S.CER C1608 JB 1H 472K-T | B | 235.8/11.5 |
| | | | | |
| RL1 | 6330001750 | RLY FTR-B4CA012Z | | |
| RL2 | 6330001750 | RLY FTR-B4CA012Z | | |
| RL21 | 6330001750 | RLY FTR-B4CA012Z | | |
| RL22 | 6330001750 | RLY FTR-B4CA012Z | | |
| RL51 | 6330001750 | RLY FTR-B4CA012Z | | |
| RL52 | 6330001750 | RLY FTR-B4CA012Z | | |
| RL81 | 6330001750 | RLY FTR-B4CA012Z | | |
| RL82 | 6330001750 | RLY FTR-B4CA012Z | | |
| RL111 | 6330001750 | RLY FTR-B4CA012Z | | |
| RL112 | 6330001750 | RLY FTR-B4CA012Z | | |
| RL141 | 6330001750 | RLY FTR-B4CA012Z | | |
| RL142 | 6330001750 | RLY FTR-B4CA012Z | | |
| RL171 | 6330001750 | RLY FTR-B4CA012Z | | |
| RL172 | 6330001750 | RLY FTR-B4CA012Z | | |
| RL201 | 6330001750 | RLY FTR-B4CA012Z | | |
| RL202 | 6330001750 | RLY FTR-B4CA012Z | | |
| RL231 | 6330001750 | RLY FTR-B4CA012Z | | |
| RL232 | 6330001750 | RLY FTR-B4CA012Z | | |
| RL261 | 6330001750 | RLY FTR-B4CA012Z | | |
| RL262 | 6330001750 | RLY FTR-B4CA012Z | | |
| RL291 | 6330001750 | RLY FTR-B4CA012Z | | |
| RL292 | 6330001750 | RLY FTR-B4CA012Z | | |
| RL321 | 6330001750 | RLY FTR-B4CA012Z | | |
| RL322 | 6330001750 | RLY FTR-B4CA012Z | | |
| RL351 | 6330001750 | RLY FTR-B4CA012Z | | |
| RL352 | 6330001750 | RLY FTR-B4CA012Z | | |
| RL353 | 6330001750 | RLY FTR-B4CA012Z | | |
| RL354 | 6330001750 | RLY FTR-B4CA012Z | | |
| RL355 | 6330001750 | RLY FTR-B4CA012Z | | |
| RL371 | 6330001750 | RLY FTR-B4CA012Z | | |
| RL381 | 6330001770 | RLY SIP-1A-12Y | | |
| RL401 | 6330001770 | RLY SIP-1A-12Y | | |
| RL402 | 6330001750 | RLY FTR-B4CA012Z | | |
| RL501 | 6330001750 | RLY FTR-B4CA012Z | | |
| RL502 | 6330001750 | RLY FTR-B4CA012Z | | |

M.=Mounted side (T: Mounted on the Top side, B: Mounted on the Bottom side)
S.=Surface mount

## [BPF UNIT]

| REF NO. | ORDER NO. | DESCRIPTION | | M. | H/V LOCATION |
|---|---|---|---|---|---|
| RL531 | 6330001750 | RLY | FTR-B4CA012Z | | |
| RL532 | 6330001750 | RLY | FTR-B4CA012Z | | |
| RL561 | 6330001750 | RLY | FTR-B4CA012Z | | |
| RL562 | 6330001750 | RLY | FTR-B4CA012Z | | |
| RL591 | 6330001750 | RLY | FTR-B4CA012Z | | |
| RL592 | 6330001750 | RLY | FTR-B4CA012Z | | |
| RL621 | 6330001750 | RLY | FTR-B4CA012Z | | |
| RL622 | 6330001750 | RLY | FTR-B4CA012Z | | |
| RL651 | 6330001750 | RLY | FTR-B4CA012Z | | |
| RL652 | 6330001750 | RLY | FTR-B4CA012Z | | |
| RL681 | 6330001750 | RLY | FTR-B4CA012Z | | |
| RL682 | 6330001750 | RLY | FTR-B4CA012Z | | |
| RL711 | 6330001750 | RLY | FTR-B4CA012Z | | |
| RL712 | 6330001750 | RLY | FTR-B4CA012Z | | |
| RL741 | 6330001750 | RLY | FTR-B4CA012Z | | |
| RL742 | 6330001750 | RLY | FTR-B4CA012Z | | |
| RL771 | 6330001750 | RLY | FTR-B4CA012Z | | |
| RL772 | 6330001750 | RLY | FTR-B4CA012Z | | |
| RL801 | 6330001750 | RLY | FTR-B4CA012Z | | |
| RL802 | 6330001750 | RLY | FTR-B4CA012Z | | |
| RL831 | 6330001750 | RLY | FTR-B4CA012Z | | |
| RL832 | 6330001750 | RLY | FTR-B4CA012Z | | |
| RL851 | 6330001750 | RLY | FTR-B4CA012Z | | |
| RL852 | 6330001750 | RLY | FTR-B4CA012Z | | |
| RL853 | 6330001750 | RLY | FTR-B4CA012Z | | |
| RL854 | 6330001750 | RLY | FTR-B4CA012Z | | |
| RL855 | 6330001750 | RLY | FTR-B4CA012Z | | |
| RL871 | 6330001770 | RLY | SIP-1A-12Y | | |
| RL900 | 6330001750 | RLY | FTR-B4CA012Z | | |
| RL901 | 6330001750 | RLY | FTR-B4CA012Z | | |
| RL902 | 6330001750 | RLY | FTR-B4CA012Z | | |
| RL903 | 6330001750 | RLY | FTR-B4CA012Z | | |
| RL950 | 6330001750 | RLY | FTR-B4CA012Z | | |
| RL951 | 6330001750 | RLY | FTR-B4CA012Z | | |
| RL952 | 6330001750 | RLY | FTR-B4CA012Z | | |
| RL953 | 6330001750 | RLY | FTR-B4CA012Z | | |
| RL954 | 6330001750 | RLY | FTR-B4CA012Z | | |
| | | | | | |
| J1 | 6510020521 | S.CNR | 52808-1271 (1290) | T | 6/17 |
| J101 | 6510007020 | CNR | TMP-J01X-V6 | | |
| J102 | 6510007020 | CNR | TMP-J01X-V6 | | |
| J103 | 6510023750 | CNR | 01K1971-10 | | |
| J104 | 6510023750 | CNR | 01K1971-10 | | |
| J105 | 6510023750 | CNR | 01K1971-10 | | |
| J106 | 6510007020 | CNR | TMP-J01X-V6 | | |
| J107 | 6510007020 | CNR | TMP-J01X-V6 | | |
| J108 | 6510007020 | CNR | TMP-J01X-V6 | | |
| J504 | 6510023750 | CNR | 01K1971-10 | | |
| J505 | 6510023750 | CNR | 01K1971-10 | | |
| J506 | 6510007020 | CNR | TMP-J01X-V6 | | |
| J601 | 6510007020 | CNR | TMP-J01X-V6 | | |
| J602 | 6510007020 | CNR | TMP-J01X-V6 | | |
| | | | | | |
| EP900 | 6910012350 | S.BEA | MMZ1608Y 102BT | B | 218.9/98.8 |
| EP901 | 6910012350 | S.BEA | MMZ1608Y 102BT | B | 204.2/100.3 |
| EP902 | 6910012350 | S.BEA | MMZ1608Y 102BT | B | 197.2/98.7 |
| EP903 | 6910012350 | S.BEA | MMZ1608Y 102BT | B | 189.7/100.1 |
| EP950 | 6910012350 | S.BEA | MMZ1608Y 102BT | B | 208.8/3.5 |
| EP951 | 6910012350 | S.BEA | MMZ1608Y 102BT | T | 205.4/3.2 |
| EP952 | 6910012350 | S.BEA | MMZ1608Y 102BT | B | 193.3/3 |
| EP953 | 6910012350 | S.BEA | MMZ1608Y 102BT | B | 184.6/3.8 |

## [MAIN UNIT]

| REF NO. | ORDER NO. | DESCRIPTION | | M. | H/V LOCATION |
|---|---|---|---|---|---|
| IC1 | 1110003870 | S.IC | NJM2058M-TE1 | T | 226/83.5 |
| IC2 | 1110001901 | S.IC | uPC4570G2-E1-A | T | 187/68.8 |
| IC3 | 1130005641 | S.IC | TC4W53F (TE12L,F) | T | 191.1/75.2 |
| IC4 | 1110006300 | S.IC | NJM2172V-TE1 | T | 186.6/85.7 |
| IC5 | 1130005641 | S.IC | TC4W53F (TE12L,F) | T | 184.3/75.2 |
| IC50 | 1190001930 | S.IC | PS7122AL-1A-E3 | B | 114.4/109.1 |
| IC60 | 1110003870 | S.IC | NJM2058M-TE1 | B | 116.1/87.4 |
| IC61 | 1110003870 | S.IC | NJM2058M-TE1 | B | 129.6/94.8 |
| IC100 | 1130005641 | S.IC | TC4W53F (TE12L,F) | T | 211.8/91 |
| IC101 | 1130005641 | S.IC | TC4W53F (TE12L,F) | T | 205/91 |
| IC102 | 1110001901 | S.IC | uPC4570G2-E1-A | T | 209.7/68.5 |
| IC104 | 1110001901 | S.IC | uPC4570G2-E1-A | T | 209.8/43.4 |
| IC105 | 1110006300 | S.IC | NJM2172V-TE1 | T | 220.4/58.4 |
| IC140 | 1110006141 | IC | LA4485-E | | |
| IC180 | 1110006300 | S.IC | NJM2172V-TE1 | T | 187/57.6 |
| IC181 | 1130005641 | S.IC | TC4W53F (TE12L,F) | T | 186.9/40.3 |
| IC182 | 1110006160 | S.IC | TPA6111A2DGN | T | 186.8/35.8 |
| IC191 | 1130005641 | S.IC | TC4W53F (TE12L,F) | T | 193.3/30 |
| IC192 | 1130005641 | S.IC | TC4W53F (TE12L,F) | T | 180.6/30.2 |
| IC201 | 1130005641 | S.IC | TC4W53F (TE12L,F) | T | 147.7/71.6 |
| IC210 | 1110006300 | S.IC | NJM2172V-TE1 | T | 160.5/90.1 |
| IC230 | 1110001901 | S.IC | uPC4570G2-E1-A | T | 68.3/22.2 |
| IC250 | 1130011530 | S.IC | CD74HC4094M96 | T | 137.4/32.2 |
| IC251 | 1160000131 | S.IC | TD62783AFG (S,EL) | T | 125.7/34 |
| IC260 | 1130011530 | S.IC | CD74HC4094M96 | T | 137.4/46.6 |
| IC261 | 1160000131 | S.IC | TD62783AFG (S,EL) | T | 125.7/48.3 |
| IC290 | 1130011530 | S.IC | CD74HC4094M96 | T | 149.4/35.6 |
| IC291 | 1160000131 | S.IC | TD62783AFG (S,EL) | T | 161.1/34 |
| IC310 | 1130011530 | S.IC | CD74HC4094M96 | T | 149.4/50.1 |
| IC311 | 1160000131 | S.IC | TD62783AFG (S,EL) | T | 161.1/48.4 |
| IC330 | 1130012000 | S.IC | M62352AGP C60Q | T | 150.4/61 |
| IC331 | 1130012000 | S.IC | M62352AGP C60Q | T | 161.1/61.1 |
| IC450 | 1180002650 | S.REG | SI-3012KS-TL | B | 212.6/31.3 |
| IC451 | 1180002650 | S.REG | SI-3012KS-TL | B | 160/15.2 |
| IC452 | 1180002650 | S.REG | SI-3012KS-TL | B | 93.6/51.5 |
| IC460 | 1130005641 | S.IC | TC4W53F (TE12L,F) | T | 147.7/80 |
| IC490 | 1130005641 | S.IC | TC4W53F (TE12L,F) | B | 163.4/61.6 |
| IC491 | 1110003870 | S.IC | NJM2058M-TE1 | B | 236.2/21.9 |
| IC495 | 1130011990 | S.IC | SN74LVC1G08DCKR | T | 14.6/122.5 |
| IC501 | 1110006100 | S.IC | NJM5534MD-TE1 | T | 22.6/66.4 |
| IC502 | 1110006100 | S.IC | NJM5534MD-TE1 | T | 22.6/78.5 |
| IC503 | 1110005461 | S.IC | TA4107F (TE12L,F) | T | 23.2/91.9 |
| IC550 | 1180001771 | S.IC | TA79L05F (TE12L,F) | T | 125.5/103.1 |
| IC820 | 1110006131 | S.IC | uPC4094G2-E1-A | T | 83.5/59.3 |
| IC821 | 1110006300 | S.IC | NJM2172V-TE1 | T | 160.5/74.8 |
| | | | | | |
| Q1 | 1590001050 | S.TR | DTC114TUA T106 | B | 217/105.3 |
| Q2 | 1590001050 | S.TR | DTC114TUA T106 | B | 174.9/102.8 |
| Q3 | 1530002060 | S.TR | 2SC4081 T106 R | B | 161.8/96.7 |
| Q4 | 1530002060 | S.TR | 2SC4081 T106 R | B | 172.7/98 |
| Q5 | 1590001330 | S.TR | DTA114EUA T106 | B | 167.1/92 |
| Q6 | 1540000441 | S.TR | 2SD1619T-TD-E | B | 166.4/102.1 |
| Q7 | 1530002060 | S.TR | 2SC4081 T106 R | B | 147.8/110.4 |
| Q8 | 1530002060 | S.TR | 2SC4081 T106 R | T | 222.2/99.7 |
| Q9 | 1530002060 | S.TR | 2SC4081 T106 R | T | 179.3/101 |
| Q50 | 1590001050 | S.TR | DTC114TUA T106 | B | 119/96.6 |
| Q51 | 1590001050 | S.TR | DTC114TUA T106 | B | 118.6/100.4 |
| Q52 | 1530002060 | S.TR | 2SC4081 T106 R | T | 83.5/107.6 |
| Q60 | 1590002710 | S.TR | UMH11NTN | T | 118.7/87.6 |
| Q61 | 1590002150 | S.TR | DTC144TE TL | T | 117.8/80.2 |
| Q62 | 1510000510 | S.TR | 2SA1576A T106R | T | 123.1/93.8 |
| Q63 | 1590001050 | S.TR | DTC114TUA T106 | T | 120.2/79.9 |
| Q64 | 1590002430 | S.TR | DTA144EE TL | T | 120.2/82.2 |
| Q100 | 1590001451 | S.FET | 2SJ144-GR (TE85R,F) | T | 214.2/79.1 |
| Q101 | 1590001451 | S.FET | 2SJ144-GR (TE85R,F) | T | 204.6/79.1 |
| Q131 | 1560001131 | S.FET | CPH3403-TL-E | T | 228.6/70.9 |
| Q132 | 1560001131 | S.FET | CPH3403-TL-E | T | 233.4/47.7 |
| Q140 | 1540000471 | S.TR | 2SD1801S-TL-E | T | 241.8/37.3 |
| Q141 | 1590000680 | S.TR | DTC114EUA T106 | B | 247.8/92.4 |
| Q142 | 1590000680 | S.TR | DTC114EUA T106 | B | 239.9/92.4 |
| Q143 | 1590001050 | S.TR | DTC114TUA T106 | T | 255.3/55.4 |
| Q351 | 1560001260 | S.FET | 2SK3018 T106 | T | 129.8/85.1 |
| Q352 | 1530002060 | S.TR | 2SC4081 T106 R | T | 132.7/85.1 |
| Q474 | 1510000510 | S.TR | 2SA1576A T106R | T | 132.4/77.2 |
| Q476 | 1590001050 | S.TR | DTC114TUA T106 | T | 129.4/77.1 |
| Q490 | 1590000680 | S.TR | DTC114EUA T106 | B | 232.2/4.5 |
| Q491 | 1520000460 | S.TR | 2SB1132 T100 R | B | 224.3/4.2 |
| Q501 | 1580000751 | S.FET | 3SK294 (TE85L,F) | B | 26.9/91.8 |
| Q502 | 1590000680 | S.TR | DTC114EUA T106 | T | 47.1/79.4 |
| Q503 | 1590002710 | S.TR | UMH11NTN | T | 47.3/75.9 |
| Q504 | 1560000561 | S.FET | 2SK882-GR (TE85L,F) | B | 49.3/91.2 |
| Q506 | 1560000561 | S.FET | 2SK882-GR (TE85L,F) | B | 102.7/82.6 |
| Q507 | 1530003151 | S.TR | 2SC4673D-TD-E | T | 103.9/65.5 |
| Q508 | 1530003842 | S.TR | 2SC5501A-4-TR-E | T | 58.8/68.8 |
| Q801 | 1530003851 | S.TR | 2SC5551F-TD-E | T | 43.1/18.2 |
| Q802 | 1520000531 | S.TR | 2SB1119S-TD-E | B | 89.9/83.7 |
| Q803 | 1590000680 | S.TR | DTC114EUA T106 | B | 83.7/84.8 |
| Q804 | 1590002710 | S.TR | UMH11NTN | T | 33.9/20.3 |
| Q805 | 1590000680 | S.TR | DTC114EUA T106 | T | 30.9/21.6 |
| Q806 | 1530002060 | S.TR | 2SC4081 T106 R | T | 35.5/73.8 |
| Q808 | 1590001330 | S.TR | DTA114EUA T106 | T | 45.6/70.2 |
| Q809 | 1590000680 | S.TR | DTC114EUA T106 | T | 48.7/70.2 |
| Q810 | 1530002060 | S.TR | 2SC4081 T106 R | T | 231.4/34.2 |
| | | | | | |
| D1 | 1750000550 | S.DIO | 1SS355 TE-17 | B | 162.9/104.2 |
| D2 | 1750000550 | S.DIO | 1SS355 TE-17 | B | 170.6/104.2 |
| D3 | 1790001750 | S.DIO | DSM3MA4 | B | 65.5/122.7 |
| D4 | 1790001750 | S.DIO | DSM3MA4 | B | 65.5/113.6 |
| D50 | 1750000550 | S.DIO | 1SS355 TE-17 | B | 114.5/100.6 |
| D51 | 1790001670 | S.DIO | RB706F-40T106 | T | 90.8/112.8 |
| D52 | 1750000550 | S.DIO | 1SS355 TE-17 | T | 88.4/112.8 |
| D60 | 1750000550 | S.DIO | 1SS355 TE-17 | B | 126.8/86.8 |

M.=Mounted side (T: Mounted on the Top side, B: Mounted on the Bottom side)
S.=Surface mount

## [MAIN UNIT]

| REF NO. | ORDER NO. | DESCRIPTION | | M. | H/V LOCATION |
|---|---|---|---|---|---|
| D61 | 1750000550 | S.DIO | 1SS355 TE-17 | B | 126.6/83.4 |
| D62 | 1750000550 | S.DIO | 1SS355 TE-17 | B | 120.6/77.6 |
| D63 | 1750000550 | S.DIO | 1SS355 TE-17 | B | 116.5/93.6 |
| D64 | 1790001240 | S.DIO | MA2S728-(TX) | B | 108.1/78.3 |
| D65 | 1750000550 | S.DIO | 1SS355 TE-17 | B | 123.1/100.1 |
| D66 | 1750000550 | S.DIO | 1SS355 TE-17 | B | 134.3/89.4 |
| D67 | 1730002340 | S.ZEN | MA8047-M (TX) | B | 122.8/95.8 |
| D140 | 1750000550 | S.DIO | 1SS355 TE-17 | B | 247.8/95.1 |
| D141 | 1750000550 | S.DIO | 1SS355 TE-17 | B | 239.9/95.1 |
| D241 | 1730002280 | S.ZEN | MA8091-M (TX) | T | 231.2/32 |
| D351 | 1790001250 | S.DIO | MA2S111-(TX) | T | 129.7/83.2 |
| D450 | 1710000840 | S.DIO | 1SR154-400 TE25 | B | 218.9/28 |
| D451 | 1710000840 | S.DIO | 1SR154-400 TE25 | B | 153.4/16 |
| D452 | 1710000840 | S.DIO | 1SR154-400 TE25 | B | 93.6/58 |
| D490 | 1790000620 | S.DIO | MA77 (TX) | B | 237.5/5.4 |
| D501 | 1790000620 | S.DIO | MA77 (TX) | B | 34.3/94.1 |
| D502 | 1790000620 | S.DIO | MA77 (TX) | B | 34.3/91.8 |
| D503 | 1790000620 | S.DIO | MA77 (TX) | B | 46.6/91.4 |
| D504 | 1790000620 | S.DIO | MA77 (TX) | B | 46.7/85.3 |
| D505 | 1750000431 | S.DIO | HSB88WSTR-E | T | 70.2/90.8 |
| D506 | 1750000431 | S.DIO | HSB88WSTR-E | T | 84.3/69.4 |
| D601 | 1790000620 | S.DIO | MA77 (TX) | B | 34.7/54 |
| D602 | 1790000620 | S.DIO | MA77 (TX) | B | 34.7/33 |
| D603 | 1790000620 | S.DIO | MA77 (TX) | B | 45.5/54 |
| D604 | 1790000620 | S.DIO | MA77 (TX) | B | 45.5/33 |
| D605 | 1790000620 | S.DIO | MA77 (TX) | B | 56.3/54 |
| D606 | 1790000620 | S.DIO | MA77 (TX) | B | 56.3/33 |
| D607 | 1790000620 | S.DIO | MA77 (TX) | B | 67.1/54 |
| D608 | 1790000620 | S.DIO | MA77 (TX) | B | 67.1/33 |
| D609 | 1790000620 | S.DIO | MA77 (TX) | B | 78/54 |
| D610 | 1790000620 | S.DIO | MA77 (TX) | B | 78/33 |
| D611 | 1790000620 | S.DIO | MA77 (TX) | T | 40.8/54 |
| D612 | 1790000620 | S.DIO | MA77 (TX) | T | 40.8/33 |
| D613 | 1790000620 | S.DIO | MA77 (TX) | T | 48.7/54 |
| D614 | 1790000620 | S.DIO | MA77 (TX) | T | 49.8/33 |
| D615 | 1790000620 | S.DIO | MA77 (TX) | T | 58.9/54 |
| D616 | 1790000620 | S.DIO | MA77 (TX) | T | 58.8/33 |
| D617 | 1790000620 | S.DIO | MA77 (TX) | T | 67.8/54 |
| D618 | 1790000620 | S.DIO | MA77 (TX) | T | 67.8/33 |
| D619 | 1790000620 | S.DIO | MA77 (TX) | T | 76.8/54 |
| D620 | 1790000620 | S.DIO | MA77 (TX) | T | 76.8/33 |
| D801 | 1790000620 | S.DIO | MA77 (TX) | T | 36.5/29.9 |
| D802 | 1750000581 | S.DIO | 1SV307 (TPH3,F) | T | 34.7/29.9 |
| D806 | 1790000620 | S.DIO | MA77 (TX) | B | 84.2/76.6 |
| D820 | 1750000581 | S.DIO | 1SV307 (TPH3,F) | T | 86/33 |
| | | | | | |
| FI501 | 2020001070 | CER | CFWLA455KDFA-B0 (CFWS455D) | | |
| FI502 | 2020001510 | CER | CFWLA455KJFA-B0 (CFWS455IT) | | |
| FI503 | 2010002580 | S.FIL | FL-348 (64.455 MHz) | T | 93.4/90.8 |
| | | | | | |
| L1 | 6200003261 | S.COL | NLV32T-101J | B | 211.7/110.3 |
| L2 | 6200003261 | S.COL | NLV32T-101J | B | 222.2/110.3 |
| L3 | 6200003950 | S.COL | HF50ACC 322513-T | B | 204.7/110.3 |
| L4 | 6200003261 | S.COL | NLV32T-101J | T | 218.7/109.6 |
| L5 | 6200003261 | S.COL | NLV32T-101J | B | 225.7/110.3 |
| L6 | 6200003261 | S.COL | NLV32T-101J | B | 215.2/110.3 |
| L7 | 6200003950 | S.COL | HF50ACC 322513-T | T | 208.2/109.6 |
| L8 | 6200003261 | S.COL | NLV32T-101J | B | 200.4/110.3 |
| L9 | 6200003950 | S.COL | HF50ACC 322513-T | B | 193.4/110 |
| L10 | 6200003261 | S.COL | NLV32T-101J | B | 196.9/110.3 |
| L11 | 6200003261 | S.COL | NLV32T-101J | B | 169.7/110.3 |
| L12 | 6200003261 | S.COL | NLV32T-101J | B | 180.2/110.3 |
| L13 | 6200003950 | S.COL | HF50ACC 322513-T | B | 162.7/110.3 |
| L14 | 6200003261 | S.COL | NLV32T-101J | T | 176.7/109.7 |
| L15 | 6200003261 | S.COL | NLV32T-101J | B | 183.7/110.3 |
| L16 | 6200003261 | S.COL | NLV32T-101J | B | 173.2/110.3 |
| L17 | 6200003950 | S.COL | HF50ACC 322513-T | T | 166.2/109.2 |
| L18 | 6200003261 | S.COL | NLV32T-101J | B | 158.4/110.3 |
| L19 | 6200003950 | S.COL | HF50ACC 322513-T | B | 151.4/110 |
| L20 | 6200003261 | S.COL | NLV32T-101J | B | 154.9/110.3 |
| L21 | 6200003950 | S.COL | HF50ACC 322513-T | B | 211.7/124.6 |
| L22 | 6200003950 | S.COL | HF50ACC 322513-T | B | 169.7/124.5 |
| L31 | 6200003261 | S.COL | NLV32T-101J | B | 194.2/88.9 |
| L50 | 6200003261 | S.COL | NLV32T-101J | B | 139.6/122.6 |
| L51 | 6200003590 | S.COL | EXCCL3225U1 | B | 122.1/107.2 |
| L52 | 6200003261 | S.COL | NLV32T-101J | B | 77.2/122.3 |
| L53 | 6200003261 | S.COL | NLV32T-101J | B | 77.2/117.4 |
| L54 | 6200003261 | S.COL | NLV32T-101J | T | 85.8/112.8 |
| L55 | 6200003261 | S.COL | NLV32T-101J | B | 95.6/107.2 |
| L56 | 6200003590 | S.COL | EXCCL3225U1 | B | 63.9/107.4 |
| L80 | 6200009790 | S.COL | BLM31PG121SN1 | B | 53.4/118.4 |
| L140 | 6200003261 | S.COL | NLV32T-101J | T | 219.7/48.1 |
| L141 | 2040000490 | COL | EXC-ELDR25C | | |
| L142 | 2040000490 | COL | EXC-ELDR25C | | |
| L143 | 2040000490 | COL | EXC-ELDR25C | | |
| L180 | 6200003261 | S.COL | NLV32T-101J | T | 186.9/44.5 |
| L181 | 6200003261 | S.COL | NLV32T-101J | T | 181.2/40.1 |
| L201 | 6200003261 | S.COL | NLV32T-101J | T | 165/81.4 |
| L210 | 6200003261 | S.COL | NLV32T-101J | T | 156.1/85.2 |
| L250 | 6200003590 | S.COL | EXCCL3225U1 | T | 134.6/55.7 |
| L290 | 6200003590 | S.COL | EXCCL3225U1 | T | 152/28.2 |
| L330 | 6200001831 | S.COL | NLV32T-100J | B | 161.4/68.9 |
| L331 | 6200001831 | S.COL | NLV32T-100J | B | 164.8/68.9 |
| L340 | 6200003950 | S.COL | HF50ACC 322513-T | B | 201.7/96.1 |
| L341 | 6200003950 | S.COL | HF50ACC 322513-T | B | 195.5/96.1 |
| L360 | 6200003950 | S.COL | HF50ACC 322513-T | B | 149.7/96.1 |
| L361 | 6200003950 | S.COL | HF50ACC 322513-T | B | 143.5/96.1 |
| L380 | 6200003950 | S.COL | HF50ACC 322513-T | B | 28.5/41.9 |
| L381 | 6200003950 | S.COL | HF50ACC 322513-T | B | 28.5/48.1 |
| L400 | 6200003950 | S.COL | HF50ACC 322513-T | T | 238.3/10.9 |
| L401 | 6200003950 | S.COL | HF50ACC 322513-T | B | 234/11.2 |
| L402 | 6200003950 | S.COL | HF50ACC 322513-T | B | 237.3/11.2 |

## [MAIN UNIT]

| REF NO. | ORDER NO. | DESCRIPTION | | M. | H/V LOCATION |
|---|---|---|---|---|---|
| L405 | 6200003950 | S.COL | HF50ACC 322513-T | T | 40.3/11.3 |
| L406 | 6200003950 | S.COL | HF50ACC 322513-T | T | 34.3/11.3 |
| L407 | 6200003950 | S.COL | HF50ACC 322513-T | T | 37.3/11.3 |
| L410 | 6200003590 | S.COL | EXCCL3225U1 | T | 10.9/41 |
| L411 | 6200003950 | S.COL | HF50ACC 322513-T | B | 10.9/39.6 |
| L412 | 6200003590 | S.COL | EXCCL3225U1 | T | 10.9/38 |
| L413 | 6200003950 | S.COL | HF50ACC 322513-T | B | 10.9/36.4 |
| L418 | 6200003950 | S.COL | HF50ACC 322513-T | B | 11.1/97.2 |
| L435 | 6200003950 | S.COL | HF50ACC 322513-T | B | 6.7/76.7 |
| L440 | 6200003950 | S.COL | HF50ACC 322513-T | T | 164.1/12.7 |
| L441 | 6200003950 | S.COL | HF50ACC 322513-T | T | 161.1/12.7 |
| L450 | 6200003590 | S.COL | EXCCL3225U1 | B | 251.2/16.8 |
| L451 | 6170000150 | COL | LW-16 | | |
| L452 | 6200003590 | S.COL | EXCCL3225U1 | T | 250.2/25.4 |
| L453 | 6200003590 | S.COL | EXCCL3225U1 | T | 250.2/28.4 |
| L454 | 6200009790 | S.COL | BLM31PG121SN1 | B | 250.6/30.2 |
| L455 | 6200009790 | S.COL | BLM31PG121SN1 | B | 250.6/32.5 |
| L456 | 6200003590 | S.COL | EXCCL3225U1 | T | 250.4/39.6 |
| L480 | 6200003950 | S.COL | HF50ACC 322513-T | B | 220.6/24 |
| L481 | 6200003950 | S.COL | HF50ACC 322513-T | B | 149.8/17.1 |
| L482 | 6200003950 | S.COL | HF50ACC 322513-T | B | 94.1/61.2 |
| L495 | 6200003191 | S.COL | NLV32T-470J | B | 24.9/119.2 |
| L496 | 6200003191 | S.COL | NLV32T-470J | B | 9.8/119 |
| L501 | 6200003261 | S.COL | NLV32T-101J | T | 24.4/101.3 |
| L502 | 6200003261 | S.COL | NLV32T-101J | T | 21.4/97.1 |
| L503 | 6200003261 | S.COL | NLV32T-101J | T | 24.4/97.1 |
| L504 | 6200003520 | S.COL | ELJFB 102K-F | T | 30.6/92.2 |
| L505 | 6150004090 | COL | LS-469 (C-13969) | | |
| L507 | 6140003530 | COL | LR-395 | | |
| L508 | 6140003210 | S.COL | LR-358 | T | 75.9/90.8 |
| L509 | 6140003770 | S.COL | LR-414 4KBL (STP-01435) | T | 85.2/90.8 |
| L510 | 6140003770 | S.COL | LR-414 4KBL (STP-01435) | T | 101.6/90.8 |
| L511 | 6200003031 | S.COL | NLV32T-R47J | B | 101.9/85.8 |
| L512 | 6150004280 | COL | LS-484B (C-14927) | | |
| L513 | 6140002551 | S.COL | #617DB-1919=P3 | T | 90.6/69.4 |
| L514 | 6140002551 | S.COL | #617DB-1919=P3 | T | 78/69.4 |
| L515 | 6200003001 | S.COL | NLV32T-R22J | T | 111.3/65.7 |
| L516 | 6200003021 | S.COL | NLV32T-R33J | T | 102.8/71.4 |
| L517 | 6200001831 | S.COL | NLV32T-100J | T | 99.4/73.5 |
| L518 | 6200010720 | S.COL | C2520C-56NG-A | T | 71.2/69.1 |
| L519 | 6200010860 | S.COL | C2520C-R10G-A (0.1U) | T | 67.6/70.3 |
| L521 | 6140003900 | COL | LR-489 | | |
| L522 | 6140003890 | COL | LR-488 | | |
| L523 | 6200010381 | S.COL | ELJRE R15JFA | B | 90.6/76.8 |
| L524 | 6180002971 | S.COL | NLV32T-068J | B | 102.6/63.5 |
| L525 | 6180002971 | S.COL | NLV32T-068J | B | 100.7/67.3 |
| L526 | 6180002971 | S.COL | NLV32T-068J | B | 97/67.2 |
| L527 | 6200010660 | S.COL | C2520C-R15G-A (0.15U) | T | 64/71.6 |
| L528 | 6200003261 | S.COL | NLV32T-101J | T | 33.6/96.3 |
| L529 | 6200010381 | S.COL | ELJRE R15JFA | B | 93.2/78.1 |
| L601 | 6200003101 | S.COL | NLV32T-3R9J | B | 38.2/53.1 |
| L602 | 6200003131 | S.COL | NLV32T-120J | B | 34.7/49.6 |
| L603 | 6200003131 | S.COL | NLV32T-120J | B | 38.9/43.2 |
| L604 | 6200003131 | S.COL | NLV32T-120J | B | 34.7/37.4 |
| L605 | 6200003101 | S.COL | NLV32T-3R9J | B | 38.2/33.8 |
| L606 | 6200002961 | S.COL | NLV32T-4R7J | B | 49/53.1 |
| L607 | 6200001851 | S.COL | NLV32T-5R6J | B | 45.5/49.6 |
| L608 | 6200001851 | S.COL | NLV32T-5R6J | B | 49.7/43.5 |
| L609 | 6200001851 | S.COL | NLV32T-5R6J | B | 45.5/37.4 |
| L610 | 6200002961 | S.COL | NLV32T-4R7J | B | 49/33.8 |
| L611 | 6200002991 | S.COL | NLV32T-2R2J | B | 59.8/53.1 |
| L612 | 6200003111 | S.COL | NLV32T-6R8J | B | 56.3/49.6 |
| L613 | 6200003111 | S.COL | NLV32T-6R8J | B | 60.5/43.5 |
| L614 | 6200003111 | S.COL | NLV32T-6R8J | B | 56.3/37.4 |
| L615 | 6200002991 | S.COL | NLV32T-2R2J | B | 59.8/33.8 |
| L616 | 6200002991 | S.COL | NLV32T-2R2J | B | 70.7/53.1 |
| L617 | 6200003321 | S.COL | NLV32T-3R3J | B | 67.1/49.6 |
| L618 | 6200003321 | S.COL | NLV32T-3R3J | B | 71.3/43.5 |
| L619 | 6200003321 | S.COL | NLV32T-3R3J | B | 67.1/37.4 |
| L620 | 6200002991 | S.COL | NLV32T-2R2J | B | 70.6/33.8 |
| L621 | 6200003061 | S.COL | NLV32T-1R2J | B | 81.5/53.1 |
| L622 | 6200003091 | S.COL | NLV32T-2R7J | B | 78/49.6 |
| L623 | 6200003091 | S.COL | NLV32T-2R7J | B | 82.2/43.5 |
| L624 | 6200003091 | S.COL | NLV32T-2R7J | B | 78/37.4 |
| L625 | 6200003061 | S.COL | NLV32T-1R2J | B | 81.5/33.8 |
| L626 | 6200003331 | S.COL | NLV32T-1R0J | T | 37.8/50 |
| L627 | 6200003081 | S.COL | NLV32T-1R8J | T | 40.8/50 |
| L628 | 6200003081 | S.COL | NLV32T-1R8J | T | 40.2/43.5 |
| L629 | 6200003081 | S.COL | NLV32T-1R8J | T | 40.8/36.9 |
| L630 | 6200003331 | S.COL | NLV32T-1R0J | T | 37.8/36.9 |
| L631 | 6200003041 | S.COL | NLV32T-R68J | T | 46.8/50 |
| L632 | 6200003071 | S.COL | NLV32T-1R5J | T | 49.8/50 |
| L633 | 6200003071 | S.COL | NLV32T-1R5J | T | 49.2/43.5 |
| L634 | 6200003071 | S.COL | NLV32T-1R5J | T | 49.8/36.9 |
| L635 | 6200003041 | S.COL | NLV32T-R68J | T | 46.8/36.9 |
| L636 | 6200002981 | S.COL | NLV32T-R56J | T | 55.8/50 |
| L637 | 6200003051 | S.COL | NLV32T-R82J | T | 58.9/50 |
| L638 | 6200003051 | S.COL | NLV32T-R82J | T | 58.2/43.5 |
| L639 | 6200003051 | S.COL | NLV32T-R82J | T | 58.8/36.9 |
| L640 | 6200002981 | S.COL | NLV32T-R56J | T | 55.8/36.9 |
| L641 | 6200003021 | S.COL | NLV32T-R33J | T | 64.8/50 |
| L642 | 6200003041 | S.COL | NLV32T-R68J | T | 67.8/50 |
| L643 | 6200003041 | S.COL | NLV32T-R68J | T | 67.2/43.5 |
| L644 | 6200003041 | S.COL | NLV32T-R68J | T | 67.8/36.9 |
| L645 | 6200003021 | S.COL | NLV32T-R33J | T | 64.8/36.9 |
| L646 | 6200005491 | S.COL | NLV32T-331J | T | 79.8/50 |
| L647 | 6200007810 | S.COL | LQH31HN95NK03L | T | 73.2/51.3 |
| L648 | 6200009810 | S.COL | LQH31HNR61J03L | T | 76.8/50 |
| L649 | 6200009810 | S.COL | LQH31HNR61J03L | T | 75.5/43.7 |
| L650 | 6200009810 | S.COL | LQH31HNR61J03L | T | 76.8/36.9 |
| L651 | 6200007810 | S.COL | LQH31HN95NK03L | T | 73.2/35.5 |
| L801 | 6200005491 | S.COL | NLV32T-331J | T | 37.2/23.4 |
| L802 | 6200003261 | S.COL | NLV32T-101J | B | 37.2/23.8 |
| L803 | 6140003970 | COL | LR-494 | | |

M.=Mounted side (T: Mounted on the Top side, B: Mounted on the Bottom side)
S.=Surface mount

## [MAIN UNIT]

| REF NO. | ORDER NO. | DESCRIPTION | | M. | H/V LOCATION |
|---|---|---|---|---|---|
| L804 | 6200003241 | S.COL | NLV32T-221J | B | 49.2/26 |
| L820 | 6200003161 | S.COL | NLV32T-270J | T | 86.6/48.4 |
| L821 | 6200003191 | S.COL | NLV32T-470J | T | 85.8/44.9 |
| L822 | 6200003201 | S.COL | NLV32T-560J | T | 86.6/39.8 |
| R1 | 7030003550 | S.RES | ERJ3GEYJ 822 V (8.2 k) | B | 214.8/107.3 |
| R2 | 7030003550 | S.RES | ERJ3GEYJ 822 V (8.2 k) | B | 174.1/104.9 |
| R3 | 7030003520 | S.RES | ERJ3GEYJ 472 V (4.7 k) | B | 161.1/103.9 |
| R4 | 7030003620 | S.RES | ERJ3GEYJ 333 V (33 k) | B | 161.1/101.1 |
| R5 | 7030003580 | S.RES | ERJ3GEYJ 153 V (15 k) | B | 161.9/99.1 |
| R6 | 7030003520 | S.RES | ERJ3GEYJ 472 V (4.7 k) | B | 161.8/93.8 |
| R7 | 7030003520 | S.RES | ERJ3GEYJ 472 V (4.7 k) | B | 172.2/104.2 |
| R8 | 7030003620 | S.RES | ERJ3GEYJ 333 V (33 k) | B | 170.6/101.2 |
| R9 | 7030003580 | S.RES | ERJ3GEYJ 153 V (15 k) | B | 172.8/100.4 |
| R10 | 7030003520 | S.RES | ERJ3GEYJ 472 V (4.7 k) | B | 172.7/95.1 |
| R11 | 7030009891 | S.RES | ERA3YED 151V (150) | B | 167.1/94.5 |
| R12 | 7030003560 | S.RES | ERJ3GEYJ 103 V (10 k) | B | 167.1/96.3 |
| R13 | 7030003480 | S.RES | ERJ3GEYJ 222 V (2.2 k) | B | 148.7/106.9 |
| R14 | 7030003560 | S.RES | ERJ3GEYJ 103 V (10 k) | B | 146.9/106.9 |
| R15 | 7030003640 | S.RES | ERJ3GEYJ 473 V (47 k) | B | 145.1/110.4 |
| R16 | 7030003680 | S.RES | ERJ3GEYJ 104 V (100 k) | T | 224.8/77.8 |
| R17 | 7030003680 | S.RES | ERJ3GEYJ 104 V (100 k) | T | 223.4/77.8 |
| R18 | 7030003400 | S.RES | ERJ3GEYJ 471 V (470) | T | 222.1/77.8 |
| R19 | 7030003680 | S.RES | ERJ3GEYJ 104 V (100 k) | T | 227.2/77.8 |
| R20 | 7030003680 | S.RES | ERJ3GEYJ 104 V (100 k) | T | 228.6/77.8 |
| R21 | 7030003400 | S.RES | ERJ3GEYJ 471 V (470) | T | 230/77.8 |
| R22 | 7030003560 | S.RES | ERJ3GEYJ 103 V (10 k) | T | 180.8/69.6 |
| R23 | 7030003560 | S.RES | ERJ3GEYJ 103 V (10 k) | T | 181.6/67.8 |
| R24 | 7030003660 | S.RES | ERJ3GEYJ 683 V (68 k) | T | 182.3/69.7 |
| R25 | 7030003440 | S.RES | ERJ3GEYJ 102 V (1 k) | T | 181.6/71.6 |
| R26 | 7030003560 | S.RES | ERJ3GEYJ 103 V (10 k) | T | 193.3/69.7 |
| R27 | 7030003560 | S.RES | ERJ3GEYJ 103 V (10 k) | T | 192.5/67.8 |
| R28 | 7030003660 | S.RES | ERJ3GEYJ 683 V (68 k) | T | 191.8/69.7 |
| R29 | 7030003440 | S.RES | ERJ3GEYJ 102 V (1 k) | T | 192.5/71.6 |
| R30 | 7030003320 | S.RES | ERJ3GEYJ 101 V (100) | T | 192.5/66.5 |
| R31 | 7030003560 | S.RES | ERJ3GEYJ 103 V (10 k) | T | 192.9/88 |
| R32 | 7030003560 | S.RES | ERJ3GEYJ 103 V (10 k) | T | 192.9/86.7 |
| R33 | 7030003560 | S.RES | ERJ3GEYJ 103 V (10 k) | B | 188.8/83.7 |
| R34 | 7030003440 | S.RES | ERJ3GEYJ 102 V (1 k) | T | 222.3/96.5 |
| R35 | 7030003580 | S.RES | ERJ3GEYJ 153 V (15 k) | T | 222.3/97.8 |
| R36 | 7030003580 | S.RES | ERJ3GEYJ 153 V (15 k) | T | 225.1/99 |
| R37 | 7030003320 | S.RES | ERJ3GEYJ 101 V (100) | T | 219.7/97.8 |
| R38 | 7030003390 | S.RES | ERJ3GEYJ 391 V (390) | T | 225.1/100.3 |
| R39 | 7030003440 | S.RES | ERJ3GEYJ 102 V (1 k) | T | 179.3/97.8 |
| R40 | 7030003580 | S.RES | ERJ3GEYJ 153 V (15 k) | T | 179.3/99.1 |
| R41 | 7030003580 | S.RES | ERJ3GEYJ 153 V (15 k) | T | 182.3/100.3 |
| R42 | 7030003320 | S.RES | ERJ3GEYJ 101 V (100) | T | 176.5/99.1 |
| R43 | 7030003390 | S.RES | ERJ3GEYJ 391 V (390) | T | 182.3/101.6 |
| R44 | 7030003320 | S.RES | ERJ3GEYJ 101 V (100) | T | 181.6/66.5 |
| R45 | 7030003620 | S.RES | ERJ3GEYJ 333 V (33 k) | T | 192.9/85.4 |
| R46 | 7030003620 | S.RES | ERJ3GEYJ 333 V (33 k) | T | 192.9/89.3 |
| R47 | 7030003560 | S.RES | ERJ3GEYJ 103 V (10 k) | B | 185.5/83.7 |
| R49 | 7540000270 | S.ASB | ERZVF2M201 | B | 110.1/123.5 |
| R50 | 7310003820 | TRI | EVN-D2AA03 B14 | | |
| R51 | 7030003560 | S.RES | ERJ3GEYJ 103 V (10 k) | B | 152/123.2 |
| R52 | 7030003200 | S.RES | ERJ3GEYJ 100 V (10) | B | 109.6/98.6 |
| R53 | 7030003390 | S.RES | ERJ3GEYJ 391 V (390) | B | 118.6/102.4 |
| R54 | 7030003480 | S.RES | ERJ3GEYJ 222 V (2.2 k) | T | 89.9/109.6 |
| R55 | 7030003480 | S.RES | ERJ3GEYJ 222 V (2.2 k) | T | 91.3/109.6 |
| R56 | 7030003520 | S.RES | ERJ3GEYJ 472 V (4.7 k) | T | 88.4/109.6 |
| R57 | 7030003620 | S.RES | ERJ3GEYJ 333 V (33 k) | T | 86.1/109.9 |
| R58 | 7030003580 | S.RES | ERJ3GEYJ 153 V (15 k) | T | 83.5/109.9 |
| R59 | 7030003520 | S.RES | ERJ3GEYJ 472 V (4.7 k) | T | 85.4/107.6 |
| R60 | 7510001511 | S.TMR | NTCG16 4LH 223JT | B | 125/86.8 |
| R61 | 7030003660 | S.RES | ERJ3GEYJ 683 V (68 k) | B | 123.2/86.8 |
| R62 | 7030003480 | S.RES | ERJ3GEYJ 222 V (2.2 k) | B | 121.4/86.8 |
| R63 | 7030003680 | S.RES | ERJ3GEYJ 104 V (100 k) | B | 124/82.5 |
| R64 | 7030003560 | S.RES | ERJ3GEYJ 103 V (10 k) | B | 124/84.3 |
| R65 | 7030003720 | S.RES | ERJ3GEYJ 224 V (220 k) | B | 121.4/83.5 |
| R66 | 7030003320 | S.RES | ERJ3GEYJ 101 V (100) | B | 121.4/80.2 |
| R67 | 7030005681 | S.RES | ERA3YKD 473V (47 k) | B | 105.3/90.5 |
| R68 | 7030008121 | S.RES | ERA3YED 682V (6.8 k) | B | 110/87.9 |
| R69 | 7310005530 | S.TRI | TMC3ADCS2X (470) | T | 108.9/90 |
| R70 | 7030008121 | S.RES | ERA3YED 682V (6.8 k) | B | 108.9/90.5 |
| R71 | 7030005681 | S.RES | ERA3YKD 473V (47 k) | B | 107.1/90.5 |
| R72 | 7030003740 | S.RES | ERJ3GEYJ 334 V (330 k) | B | 110.7/90.5 |
| R73 | 7030003520 | S.RES | ERJ3GEYJ 472 V (4.7 k) | T | 109/78 |
| R74 | 7030003720 | S.RES | ERJ3GEYJ 224 V (220 k) | B | 121.4/91.9 |
| R75 | 7030003600 | S.RES | ERJ3GEYJ 223 V (22 k) | T | 108/86.3 |
| R76 | 7030003620 | S.RES | ERJ3GEYJ 333 V (33 k) | T | 110.6/86.3 |
| R77 | 7030003720 | S.RES | ERJ3GEYJ 224 V (220 k) | B | 110.7/85.6 |
| R78 | 7030003680 | S.RES | ERJ3GEYJ 104 V (100 k) | T | 118/90.4 |
| R79 | 7310005590 | S.TRI | TMC3ADCJ5X (220 k) | T | 114.5/90 |
| R80 | 7030003680 | S.RES | ERJ3GEYJ 104 V (100 k) | T | 118.7/84.6 |
| R81 | 7310005590 | S.TRI | TMC3ADCJ5X (220 k) | T | 114.5/85.1 |
| R82 | 7310005570 | S.TRI | TMC3ADC15X (100 k) | T | 114.5/80.2 |
| R83 | 7030003680 | S.RES | ERJ3GEYJ 104 V (100 k) | B | 116.6/79.2 |
| R84 | 7030003720 | S.RES | ERJ3GEYJ 224 V (220 k) | B | 116.6/81 |
| R85 | 7030009920 | S.RES | ERJ3GEYJ 335 V (3.3 M) | B | 113.3/81 |
| R86 | 7030003380 | S.RES | ERJ3GEYJ 331 V (330) | B | 110.7/80.2 |
| R87 | 7030003320 | S.RES | ERJ3GEYJ 101 V (100) | T | 116.1/77.8 |
| R88 | 7030003440 | S.RES | ERJ3GEYJ 102 V (1 k) | T | 123/95.8 |
| R89 | 7030003440 | S.RES | ERJ3GEYJ 102 V (1 k) | T | 125.6/93.2 |
| R90 | 7030003800 | S.RES | ERJ3GEYJ 105 V (1 M) | B | 129.6/85.8 |
| R91 | 7030003660 | S.RES | ERJ3GEYJ 683 V (68 k) | B | 129.6/88.6 |
| R92 | 7030003380 | S.RES | ERJ3GEYJ 331 V (330) | B | 119.5/93.4 |
| R93 | 7310005580 | S.TRI | TMC3ADCS3X (4.7 k) | T | 108.9/80.4 |
| R94 | 7030003320 | S.RES | ERJ3GEYJ 101 V (100) | B | 136.8/95 |
| R95 | 7030003840 | S.RES | ERJ3GEYJ 225 V (2.2 M) | B | 129.7/100.1 |
| R96 | 7030009920 | S.RES | ERJ3GEYJ 335 V (3.3 M) | B | 126.4/103.7 |
| R97 | 7030011040 | S.RES | ERJ3GEYJ 685 V (6.8 M) | B | 126.4/100.1 |
| R98 | 7030003320 | S.RES | ERJ3GEYJ 101 V (100) | T | 122.8/90.8 |
| R99 | 7030000380 | S.RES | MCR10EZHJ 1 k | B | 126.2/89.4 |

## [MAIN UNIT]

| REF NO. | ORDER NO. | DESCRIPTION | | M. | H/V LOCATION |
|---|---|---|---|---|---|
| R100 | 7030003440 | S.RES | ERJ3GEYJ 102 V (1 k) | T | 216.4/79.1 |
| R101 | 7030003520 | S.RES | ERJ3GEYJ 472 V (4.7 k) | T | 210.7/79.1 |
| R102 | 7030003680 | S.RES | ERJ3GEYJ 104 V (100 k) | T | 212/79.1 |
| R103 | 7030003560 | S.RES | ERJ3GEYJ 103 V (10 k) | T | 215.7/77 |
| R104 | 7030003560 | S.RES | ERJ3GEYJ 103 V (10 k) | T | 214.3/70 |
| R105 | 7030003440 | S.RES | ERJ3GEYJ 102 V (1 k) | T | 206.8/79.1 |
| R106 | 7030003520 | S.RES | ERJ3GEYJ 472 V (4.7 k) | T | 201.1/79.1 |
| R107 | 7030003680 | S.RES | ERJ3GEYJ 104 V (100 k) | T | 202.4/79.1 |
| R108 | 7030003560 | S.RES | ERJ3GEYJ 103 V (10 k) | T | 206.1/77 |
| R109 | 7030003560 | S.RES | ERJ3GEYJ 103 V (10 k) | T | 205.1/70 |
| R110 | 7030003560 | S.RES | ERJ3GEYJ 103 V (10 k) | T | 216.5/91 |
| R111 | 7030003560 | S.RES | ERJ3GEYJ 103 V (10 k) | T | 215.2/91 |
| R113 | 7030003440 | S.RES | ERJ3GEYJ 102 V (1 k) | T | 215.6/70 |
| R114 | 7030003560 | S.RES | ERJ3GEYJ 103 V (10 k) | T | 214.3/67.3 |
| R115 | 7030003440 | S.RES | ERJ3GEYJ 102 V (1 k) | T | 203.8/70 |
| R116 | 7030003560 | S.RES | ERJ3GEYJ 103 V (10 k) | T | 205.1/67.3 |
| R117 | 7030003620 | S.RES | ERJ3GEYJ 333 V (33 k) | T | 124.7/75 |
| R118 | 7030003680 | S.RES | ERJ3GEYJ 104 V (100 k) | T | 126/75 |
| R119 | 7030003560 | S.RES | ERJ3GEYJ 103 V (10 k) | B | 217/60.1 |
| R120 | 7030003560 | S.RES | ERJ3GEYJ 103 V (10 k) | B | 217/56.7 |
| R123 | 7030003520 | S.RES | ERJ3GEYJ 472 V (4.7 k) | T | 214.5/46.3 |
| R124 | 7030003520 | S.RES | ERJ3GEYJ 472 V (4.7 k) | T | 205.3/47.2 |
| R125 | 7030003320 | S.RES | ERJ3GEYJ 101 V (100) | T | 213.6/48.8 |
| R126 | 7030003470 | S.RES | ERJ3GEYJ 182 V (1.8 k) | T | 167.3/61.4 |
| R127 | 7030003470 | S.RES | ERJ3GEYJ 182 V (1.8 k) | T | 167.3/62.8 |
| R128 | 7030003470 | S.RES | ERJ3GEYJ 182 V (1.8 k) | T | 167.3/64.1 |
| R129 | 7030003470 | S.RES | ERJ3GEYJ 182 V (1.8 k) | T | 167.3/65.4 |
| R130 | 7030003480 | S.RES | ERJ3GEYJ 222 V (2.2 k) | B | 219.7/57.7 |
| R131 | 7030003480 | S.RES | ERJ3GEYJ 222 V (2.2 k) | B | 219.6/59.2 |
| R132 | 7030000380 | S.RES | MCR10EZHJ 1 k | B | 123.4/92.5 |
| R133 | 7030003520 | S.RES | ERJ3GEYJ 472 V (4.7 k) | T | 230.6/61.6 |
| R134 | 7030003440 | S.RES | ERJ3GEYJ 102 V (1 k) | T | 232.2/65.3 |
| R135 | 7030003520 | S.RES | ERJ3GEYJ 472 V (4.7 k) | T | 232/53 |
| R136 | 7030003440 | S.RES | ERJ3GEYJ 102 V (1 k) | T | 232/51.7 |
| R137 | 7030003480 | S.RES | ERJ3GEYJ 222 V (2.2 k) | T | 232.2/64 |
| R138 | 7030003320 | S.RES | ERJ3GEYJ 101 V (100) | B | 204.5/64.9 |
| R139 | 7030003560 | S.RES | ERJ3GEYJ 103 V (10 k) | T | 226.2/71 |
| R140 | 7030003560 | S.RES | ERJ3GEYJ 103 V (10 k) | T | 230.4/46.7 |
| R141 | 7030003560 | S.RES | ERJ3GEYJ 103 V (10 k) | B | 256.3/59.4 |
| R142 | 7030003640 | S.RES | ERJ3GEYJ 473 V (47 k) | B | 254.5/59.4 |
| R143 | 7030004040 | S.RES | ERJ3GEYJ 4R7 V (4.7) | B | 252.4/98.6 |
| R144 | 7030004040 | S.RES | ERJ3GEYJ 4R7 V (4.7) | B | 244.1/109.8 |
| R145 | 7030003440 | S.RES | ERJ3GEYJ 102 V (1 k) | T | 234.8/76.9 |
| R146 | 7510001511 | S.TMR | NTCG16 4LH 223JT | T | 232.2/76.9 |
| R147 | 7030003750 | S.RES | ERJ3GEYJ 394 V (390 k) | T | 233.7/75.6 |
| R149 | 7030003360 | S.RES | ERJ3GEYJ 221 V (220) | B | 252.2/92.4 |
| R150 | 7030003360 | S.RES | ERJ3GEYJ 221 V (220) | B | 243.8/92.4 |
| R151 | 7030003410 | S.RES | ERJ3GEYJ 561 V (560) | T | 243.8/33.1 |
| R152 | 7030003320 | S.RES | ERJ3GEYJ 101 V (100) | B | 215.1/71.9 |
| R154 | 7030003320 | S.RES | ERJ3GEYJ 101 V (100) | T | 206.3/37.3 |
| R155 | 7030003640 | S.RES | ERJ3GEYJ 473 V (47 k) | T | 215.3/42.8 |
| R156 | 7030003640 | S.RES | ERJ3GEYJ 473 V (47 k) | T | 204.5/39.8 |
| R157 | 7030003480 | S.RES | ERJ3GEYJ 222 V (2.2 k) | T | 214.9/82.1 |
| R158 | 7030003480 | S.RES | ERJ3GEYJ 222 V (2.2 k) | T | 206/82.6 |
| R159 | 7030003440 | S.RES | ERJ3GEYJ 102 V (1 k) | T | 214.3/64.6 |
| R160 | 7030003440 | S.RES | ERJ3GEYJ 102 V (1 k) | T | 226.7/92.1 |
| R161 | 7030003480 | S.RES | ERJ3GEYJ 222 V (2.2 k) | T | 228/92.1 |
| R162 | 7030003680 | S.RES | ERJ3GEYJ 104 V (100 k) | T | 226.7/89.3 |
| R163 | 7030003570 | S.RES | ERJ3GEYJ 123 V (12 k) | T | 228/89.3 |
| R164 | 7030003680 | S.RES | ERJ3GEYJ 104 V (100 k) | T | 229.3/89.3 |
| R165 | 7030003680 | S.RES | ERJ3GEYJ 104 V (100 k) | T | 230.6/89.3 |
| R166 | 7030003400 | S.RES | ERJ3GEYJ 471 V (470) | T | 231.9/89.3 |
| R167 | 7030003440 | S.RES | ERJ3GEYJ 102 V (1 k) | T | 225.4/92.1 |
| R168 | 7030003480 | S.RES | ERJ3GEYJ 222 V (2.2 k) | T | 224.1/92.1 |
| R169 | 7030003680 | S.RES | ERJ3GEYJ 104 V (100 k) | T | 225.4/89.3 |
| R170 | 7030003570 | S.RES | ERJ3GEYJ 123 V (12 k) | T | 224.1/89.3 |
| R171 | 7030003680 | S.RES | ERJ3GEYJ 104 V (100 k) | T | 222.8/89.3 |
| R172 | 7030003680 | S.RES | ERJ3GEYJ 104 V (100 k) | T | 221.5/89.3 |
| R173 | 7030003400 | S.RES | ERJ3GEYJ 471 V (470) | T | 220.2/89.3 |
| R174 | 7030003440 | S.RES | ERJ3GEYJ 102 V (1 k) | T | 205.1/64.5 |
| R175 | 7030003860 | S.RES | ERJ3GE JPW V | B | 192.6/39.4 |
| R176 | 7030003450 | S.RES | ERJ3GEYJ 122 V (1.2 k) | T | 107.8/82.8 |
| R180 | 7030003560 | S.RES | ERJ3GEYJ 103 V (10 k) | B | 190.2/57 |
| R181 | 7030003560 | S.RES | ERJ3GEYJ 103 V (10 k) | B | 191.8/57 |
| R183 | 7030003470 | S.RES | ERJ3GEYJ 182 V (1.8 k) | T | 167.3/60.1 |
| R184 | 7030003470 | S.RES | ERJ3GEYJ 182 V (1.8 k) | T | 167.3/58.8 |
| R185 | 7030003470 | S.RES | ERJ3GEYJ 182 V (1.8 k) | T | 167.3/57.5 |
| R186 | 7030003470 | S.RES | ERJ3GEYJ 182 V (1.8 k) | T | 167.3/56.2 |
| R187 | 7030003480 | S.RES | ERJ3GEYJ 222 V (2.2 k) | T | 180.9/57.8 |
| R188 | 7030003480 | S.RES | ERJ3GEYJ 222 V (2.2 k) | T | 180.9/56.5 |
| R189 | 7030003560 | S.RES | ERJ3GEYJ 103 V (10 k) | B | 188.9/43.4 |
| R190 | 7030003560 | S.RES | ERJ3GEYJ 103 V (10 k) | B | 188.9/40.6 |
| R191 | 7030003440 | S.RES | ERJ3GEYJ 102 V (1 k) | T | 194.1/35.6 |
| R192 | 7030003610 | S.RES | ERJ3GEYJ 273 V (27 k) | T | 192/34.9 |
| R193 | 7030003440 | S.RES | ERJ3GEYJ 102 V (1 k) | T | 178.3/41.3 |
| R194 | 7030003610 | S.RES | ERJ3GEYJ 273 V (27 k) | T | 181.7/35.4 |
| R195 | 7030003440 | S.RES | ERJ3GEYJ 102 V (1 k) | T | 191.3/44.8 |
| R196 | 7030003440 | S.RES | ERJ3GEYJ 102 V (1 k) | T | 183.4/48 |
| R197 | 7030003320 | S.RES | ERJ3GEYJ 101 V (100) | T | 125.6/94.5 |
| R198 | 7030003640 | S.RES | ERJ3GEYJ 473 V (47 k) | T | 120.2/90.8 |
| R199 | 7030003520 | S.RES | ERJ3GEYJ 472 V (4.7 k) | T | 121.7/89 |
| R200 | 7030003560 | S.RES | ERJ3GEYJ 103 V (10 k) | B | 166.9/76.4 |
| R201 | 7030003560 | S.RES | ERJ3GEYJ 103 V (10 k) | T | 161.2/71.4 |
| R202 | 7030003520 | S.RES | ERJ3GEYJ 472 V (4.7 k) | T | 167.5/72.8 |
| R203 | 7030003720 | S.RES | ERJ3GEYJ 224 V (220 k) | T | 166.2/73.5 |
| R204 | 7030003320 | S.RES | ERJ3GEYJ 101 V (100) | T | 142.2/67.8 |
| R205 | 7030003320 | S.RES | ERJ3GEYJ 101 V (100) | B | 148.2/70 |
| R208 | 7030003440 | S.RES | ERJ3GEYJ 102 V (1 k) | T | 147.2/75.8 |
| R211 | 7030003560 | S.RES | ERJ3GEYJ 103 V (10 k) | T | 162.7/93.7 |
| R212 | 7030003520 | S.RES | ERJ3GEYJ 472 V (4.7 k) | T | 165.1/91.5 |
| R213 | 7030003440 | S.RES | ERJ3GEYJ 102 V (1 k) | T | 165.1/94.1 |
| R214 | 7030003600 | S.RES | ERJ3GEYJ 223 V (22 k) | B | 152.9/84.5 |
| R216 | 7030003620 | S.RES | ERJ3GEYJ 333 V (33 k) | B | 152.9/82.7 |
| R218 | 7030003580 | S.RES | ERJ3GEYJ 153 V (15 k) | T | 138.3/85.3 |

M.=Mounted side (T: Mounted on the Top side, B: Mounted on the Bottom side)
S.=Surface mount

## [MAIN UNIT]

| REF NO. | ORDER NO. | DESCRIPTION | M. | H/V LOCATION |
|---|---|---|---|---|
| R221 | 7030003560 | S.RES ERJ3GEYJ 103 V (10 k) | T | 158.5/93.7 |
| R222 | 7030003520 | S.RES ERJ3GEYJ 472 V (4.7 k) | T | 155.9/91.5 |
| R223 | 7030003440 | S.RES ERJ3GEYJ 102 V (1 k) | T | 155.9/94.1 |
| R224 | 7030003600 | S.RES ERJ3GEYJ 223 V (22 k) | B | 152.9/89.3 |
| R226 | 7030003620 | S.RES ERJ3GEYJ 333 V (33 k) | B | 152.9/87.5 |
| R228 | 7030003580 | S.RES ERJ3GEYJ 153 V (15 k) | T | 138.3/90.2 |
| R230 | 7030003320 | S.RES ERJ3GEYJ 101 V (100) | T | 66.5/5.7 |
| R231 | 7030003320 | S.RES ERJ3GEYJ 101 V (100) | T | 73.9/23.8 |
| R232 | 7030003680 | S.RES ERJ3GEYJ 104 V (100 k) | T | 74.3/20.3 |
| R233 | 7030003560 | S.RES ERJ3GEYJ 103 V (10 k) | T | 76.4/22 |
| R234 | 7030003320 | S.RES ERJ3GEYJ 101 V (100) | T | 73.3/17.2 |
| R235 | 7030003860 | S.RES ERJ3GE JPW V | T | 155.9/58.5 |
| R240 | 7030003420 | S.RES ERJ3GEYJ 681 V (680) | T | 177.1/58.1 |
| R241 | 7030003360 | S.RES ERJ3GEYJ 221 V (220) | T | 233.5/35.2 |
| R242 | 7030003440 | S.RES ERJ3GEYJ 102 V (1 k) | T | 233.4/32.7 |
| R243 | 7030003440 | S.RES ERJ3GEYJ 102 V (1 k) | T | 213.8/40.1 |
| R244 | 7030003440 | S.RES ERJ3GEYJ 102 V (1 k) | T | 217.1/43.5 |
| R245 | 7030003540 | S.RES ERJ3GEYJ 682 V (6.8 k) | T | 215.3/44.3 |
| R246 | 7030003440 | S.RES ERJ3GEYJ 102 V (1 k) | T | 205.3/41.8 |
| R247 | 7030003440 | S.RES ERJ3GEYJ 102 V (1 k) | T | 204/44.6 |
| R248 | 7030003540 | S.RES ERJ3GEYJ 682 V (6.8 k) | T | 205.3/44.6 |
| R249 | 7030003560 | S.RES ERJ3GEYJ 103 V (10 k) | T | 163.3/70.9 |
| R250 | 7030003200 | S.RES ERJ3GEYJ 100 V (10) | B | 117.1/28.7 |
| R251 | 7030003200 | S.RES ERJ3GEYJ 100 V (10) | B | 117.8/30.1 |
| R252 | 7030003200 | S.RES ERJ3GEYJ 100 V (10) | B | 117.1/31.5 |
| R253 | 7030003200 | S.RES ERJ3GEYJ 100 V (10) | B | 117.8/32.9 |
| R254 | 7030003200 | S.RES ERJ3GEYJ 100 V (10) | B | 117.1/34.3 |
| R255 | 7030003200 | S.RES ERJ3GEYJ 100 V (10) | B | 117.8/35.7 |
| R256 | 7030003200 | S.RES ERJ3GEYJ 100 V (10) | B | 117.1/37.1 |
| R257 | 7030003200 | S.RES ERJ3GEYJ 100 V (10) | B | 117.8/38.5 |
| R258 | 7030003560 | S.RES ERJ3GEYJ 103 V (10 k) | B | 120.4/28.7 |
| R259 | 7030003560 | S.RES ERJ3GEYJ 103 V (10 k) | B | 121.2/30.1 |
| R260 | 7030003560 | S.RES ERJ3GEYJ 103 V (10 k) | B | 120.4/31.5 |
| R261 | 7030003560 | S.RES ERJ3GEYJ 103 V (10 k) | B | 121.2/32.9 |
| R262 | 7030003560 | S.RES ERJ3GEYJ 103 V (10 k) | B | 120.4/34.3 |
| R263 | 7030003560 | S.RES ERJ3GEYJ 103 V (10 k) | B | 121.2/35.7 |
| R264 | 7030003560 | S.RES ERJ3GEYJ 103 V (10 k) | B | 120.4/37.1 |
| R265 | 7030003560 | S.RES ERJ3GEYJ 103 V (10 k) | B | 121.2/38.5 |
| R270 | 7030003200 | S.RES ERJ3GEYJ 100 V (10) | B | 120.6/42.8 |
| R271 | 7030003200 | S.RES ERJ3GEYJ 100 V (10) | B | 121.3/44.2 |
| R272 | 7030003200 | S.RES ERJ3GEYJ 100 V (10) | B | 120.6/45.6 |
| R273 | 7030003200 | S.RES ERJ3GEYJ 100 V (10) | B | 121.3/47 |
| R274 | 7030003200 | S.RES ERJ3GEYJ 100 V (10) | B | 120.6/48.4 |
| R275 | 7030003200 | S.RES ERJ3GEYJ 100 V (10) | B | 121.3/49.8 |
| R276 | 7030003200 | S.RES ERJ3GEYJ 100 V (10) | B | 120.6/51.2 |
| R277 | 7030003200 | S.RES ERJ3GEYJ 100 V (10) | B | 124.2/54.7 |
| R278 | 7030003560 | S.RES ERJ3GEYJ 103 V (10 k) | B | 124.3/42.8 |
| R279 | 7030003560 | S.RES ERJ3GEYJ 103 V (10 k) | B | 125/44.2 |
| R280 | 7030003560 | S.RES ERJ3GEYJ 103 V (10 k) | B | 124.3/45.6 |
| R281 | 7030003560 | S.RES ERJ3GEYJ 103 V (10 k) | B | 125/47 |
| R282 | 7030003560 | S.RES ERJ3GEYJ 103 V (10 k) | B | 124.3/48.4 |
| R283 | 7030003560 | S.RES ERJ3GEYJ 103 V (10 k) | B | 125/49.8 |
| R284 | 7030003560 | S.RES ERJ3GEYJ 103 V (10 k) | B | 124.3/51.2 |
| R285 | 7030003560 | S.RES ERJ3GEYJ 103 V (10 k) | B | 125/52.6 |
| R290 | 7030003200 | S.RES ERJ3GEYJ 100 V (10) | B | 164.1/41.5 |
| R291 | 7030003200 | S.RES ERJ3GEYJ 100 V (10) | B | 164.1/39.7 |
| R292 | 7030003200 | S.RES ERJ3GEYJ 100 V (10) | B | 164.1/37.9 |
| R293 | 7030003200 | S.RES ERJ3GEYJ 100 V (10) | B | 164.1/36.1 |
| R294 | 7030003200 | S.RES ERJ3GEYJ 100 V (10) | B | 164.1/34.3 |
| R295 | 7030003200 | S.RES ERJ3GEYJ 100 V (10) | B | 164.1/32.5 |
| R296 | 7030003200 | S.RES ERJ3GEYJ 100 V (10) | B | 164.1/30.7 |
| R298 | 7030003560 | S.RES ERJ3GEYJ 103 V (10 k) | B | 160.8/41.5 |
| R299 | 7030003560 | S.RES ERJ3GEYJ 103 V (10 k) | B | 160.8/39.7 |
| R300 | 7030003560 | S.RES ERJ3GEYJ 103 V (10 k) | B | 160.8/37.9 |
| R301 | 7030003560 | S.RES ERJ3GEYJ 103 V (10 k) | B | 160.8/36.1 |
| R302 | 7030003560 | S.RES ERJ3GEYJ 103 V (10 k) | B | 160.8/34.3 |
| R303 | 7030003560 | S.RES ERJ3GEYJ 103 V (10 k) | B | 160.8/32.5 |
| R304 | 7030003560 | S.RES ERJ3GEYJ 103 V (10 k) | B | 160.8/30.7 |
| R310 | 7030003200 | S.RES ERJ3GEYJ 100 V (10) | B | 166.1/55.9 |
| R311 | 7030003200 | S.RES ERJ3GEYJ 100 V (10) | B | 163.5/54.1 |
| R312 | 7030003200 | S.RES ERJ3GEYJ 100 V (10) | B | 164.1/52.3 |
| R313 | 7030003200 | S.RES ERJ3GEYJ 100 V (10) | B | 164.1/50.5 |
| R314 | 7030003200 | S.RES ERJ3GEYJ 100 V (10) | B | 164.1/48.7 |
| R315 | 7030003200 | S.RES ERJ3GEYJ 100 V (10) | B | 164.1/46.9 |
| R316 | 7030003200 | S.RES ERJ3GEYJ 100 V (10) | B | 164.1/45.1 |
| R317 | 7030003200 | S.RES ERJ3GEYJ 100 V (10) | B | 164.1/43.3 |
| R318 | 7030003560 | S.RES ERJ3GEYJ 103 V (10 k) | B | 162.1/55.9 |
| R319 | 7030003560 | S.RES ERJ3GEYJ 103 V (10 k) | B | 160.2/54.1 |
| R320 | 7030003560 | S.RES ERJ3GEYJ 103 V (10 k) | B | 160.8/52.3 |
| R321 | 7030003560 | S.RES ERJ3GEYJ 103 V (10 k) | B | 160.8/50.5 |
| R322 | 7030003560 | S.RES ERJ3GEYJ 103 V (10 k) | B | 160.8/48.7 |
| R323 | 7030003560 | S.RES ERJ3GEYJ 103 V (10 k) | B | 160.8/46.9 |
| R324 | 7030003560 | S.RES ERJ3GEYJ 103 V (10 k) | B | 160.8/45.1 |
| R325 | 7030003560 | S.RES ERJ3GEYJ 103 V (10 k) | B | 160.8/43.3 |
| R330 | 7030009891 | S.RES ERA3YED 151V (150) | T | 155/65.5 |
| R331 | 7030009851 | S.RES ERA3YED 271V (270) | T | 152.4/65.5 |
| R341 | 7030003520 | S.RES ERJ3GEYJ 472 V (4.7 k) | B | 199.8/27.5 |
| R342 | 7030004050 | S.RES ERJ3GEYJ 1R0 V (1) | T | 214.6/28.5 |
| R351 | 7030003680 | S.RES ERJ3GEYJ 104 V (100 k) | T | 129.6/81.6 |
| R352 | 7030003640 | S.RES ERJ3GEYJ 473 V (47 k) | T | 132.5/83.2 |
| R353 | 7030003560 | S.RES ERJ3GEYJ 103 V (10 k) | T | 134.7/83.7 |
| R361 | 7030003520 | S.RES ERJ3GEYJ 472 V (4.7 k) | B | 144.7/26.2 |
| R362 | 7030004050 | S.RES ERJ3GEYJ 1R0 V (1) | T | 157.7/16.5 |
| R381 | 7030004050 | S.RES ERJ3GEYJ 1R0 V (1) | T | 93.7/50.7 |
| R397 | 7030003410 | S.RES ERJ3GEYJ 561 V (560) | B | 108.3/36.7 |
| R398 | 7030007860 | S.RES ERJ3GEYJ 8R2V (8.2) | B | 110.2/38.7 |
| R399 | 7030003410 | S.RES ERJ3GEYJ 561 V (560) | B | 108.3/39.6 |
| R400 | 7030003360 | S.RES ERJ3GEYJ 221 V (220) | T | 228.3/9.9 |
| R401 | 7030003360 | S.RES ERJ3GEYJ 221 V (220) | B | 227.3/9.9 |
| R402 | 7030003360 | S.RES ERJ3GEYJ 221 V (220) | T | 226.3/9.9 |
| R403 | 7030003360 | S.RES ERJ3GEYJ 221 V (220) | T | 28.3/9.9 |
| R404 | 7030003360 | S.RES ERJ3GEYJ 221 V (220) | T | 27/9.9 |
| R405 | 7030003360 | S.RES ERJ3GEYJ 221 V (220) | T | 25.7/9.9 |
| R410 | 7030003320 | S.RES ERJ3GEYJ 101 V (100) | T | 9.9/56 |

## [MAIN UNIT]

| REF NO. | ORDER NO. | DESCRIPTION | M. | H/V LOCATION |
|---|---|---|---|---|
| R413 | 7030003320 | S.RES ERJ3GEYJ 101 V (100) | B | 9.9/53 |
| R414 | 7030003320 | S.RES ERJ3GEYJ 101 V (100) | T | 9.9/52 |
| R415 | 7030003320 | S.RES ERJ3GEYJ 101 V (100) | B | 9.9/51 |
| R416 | 7030003320 | S.RES ERJ3GEYJ 101 V (100) | T | 9.9/50 |
| R417 | 7030003320 | S.RES ERJ3GEYJ 101 V (100) | B | 9.9/47 |
| R418 | 7030003320 | S.RES ERJ3GEYJ 101 V (100) | T | 9.9/46 |
| R419 | 7030003320 | S.RES ERJ3GEYJ 101 V (100) | B | 9.9/45 |
| R420 | 7030003320 | S.RES ERJ3GEYJ 101 V (100) | T | 9.9/44 |
| R421 | 7030003320 | S.RES ERJ3GEYJ 101 V (100) | B | 9.9/43 |
| R422 | 7030003320 | S.RES ERJ3GEYJ 101 V (100) | T | 9.9/32 |
| R423 | 7030003320 | S.RES ERJ3GEYJ 101 V (100) | T | 9.9/30 |
| R424 | 7030003320 | S.RES ERJ3GEYJ 101 V (100) | B | 9.9/29 |
| R450 | 7030003600 | S.RES ERJ3GEYJ 223 V (22 k) | B | 205.8/28 |
| R451 | 7030003600 | S.RES ERJ3GEYJ 223 V (22 k) | B | 166.9/18.4 |
| R452 | 7030003600 | S.RES ERJ3GEYJ 223 V (22 k) | B | 94.3/43.7 |
| R460 | 7030003560 | S.RES ERJ3GEYJ 103 V (10 k) | B | 144.4/79.4 |
| R461 | 7030003560 | S.RES ERJ3GEYJ 103 V (10 k) | B | 144.1/73.6 |
| R462 | 7030003580 | S.RES ERJ3GEYJ 153 V (15 k) | T | 79.1/23.3 |
| R463 | 7030003560 | S.RES ERJ3GEYJ 103 V (10 k) | T | 158.6/71.4 |
| R466 | 7030003440 | S.RES ERJ3GEYJ 102 V (1 k) | T | 73.7/22.2 |
| R467 | 7030003320 | S.RES ERJ3GEYJ 101 V (100) | B | 148.2/73.6 |
| R468 | 7030003620 | S.RES ERJ3GEYJ 333 V (33 k) | T | 142.2/77.4 |
| R469 | 7030003520 | S.RES ERJ3GEYJ 472 V (4.7 k) | T | 143/75.7 |
| R470 | 7030003620 | S.RES ERJ3GEYJ 333 V (33 k) | T | 165.9/78.4 |
| R471 | 7030003440 | S.RES ERJ3GEYJ 102 V (1 k) | T | 152.2/67.8 |
| R472 | 7030003640 | S.RES ERJ3GEYJ 473 V (47 k) | T | 165.9/77.1 |
| R474 | 7030003600 | S.RES ERJ3GEYJ 223 V (22 k) | T | 132.5/75.3 |
| R476 | 7030003760 | S.RES ERJ3GEYJ 474 V (470 k) | T | 126.5/77.5 |
| R479 | 7030003550 | S.RES ERJ3GEYJ 822 V (8.2 k) | B | 170.5/73.6 |
| R481 | 7030003860 | S.RES ERJ3GE JPW V | B | 170.5/70.8 |
| R482 | 7030000010 | S.RES MCR10EZHJ JPW (000) | B | 108.8/46 |
| R483 | 7030000010 | S.RES MCR10EZHJ JPW (000) | B | 206.6/18.3 |
| R484 | 7030000010 | S.RES MCR10EZHJ JPW (000) | B | 151.6/27.6 |
| R485 | 7030003860 | S.RES ERJ3GE JPW V | T | 9.9/48 |
| R486 | 7030003860 | S.RES ERJ3GE JPW V | B | 9.9/49 |
| R487 | 7030000010 | S.RES MCR10EZHJ JPW (000) | T | 9.9/58.1 |
| R488 | 7030003860 | S.RES ERJ3GE JPW V | B | 111.4/76.2 |
| R489 | 7030003500 | S.RES ERJ3GEYJ 332 V (3.3 k) | B | 229/6 |
| R490 | 7030003440 | S.RES ERJ3GEYJ 102 V (1 k) | B | 159.4/63.3 |
| R491 | 7030003560 | S.RES ERJ3GEYJ 103 V (10 k) | B | 157.7/59.6 |
| R492 | 7030003560 | S.RES ERJ3GEYJ 103 V (10 k) | B | 159.5/59.6 |
| R493 | 7030003410 | S.RES ERJ3GEYJ 561 V (560) | T | 130.7/103 |
| R494 | 7030005331 | S.RES ERA3YED 562V (5.6 k) | T | 218.4/78.6 |
| R495 | 7030010480 | S.RES ERJ1TYJ 181U (180) | T | 212.4/2.3 |
| R496 | 7030005331 | S.RES ERA3YED 562V (5.6 k) | T | 218.4/77.3 |
| R497 | 7030007911 | S.RES ERA3YKD 563V (56 k) | B | 228.6/16.1 |
| R498 | 7030005631 | S.RES ERA3YKD 154V (150 k) | B | 228.6/20.2 |
| R499 | 7030005631 | S.RES ERA3YKD 154V (150 k) | B | 230.4/20.2 |
| R501 | 7030003440 | S.RES ERJ3GEYJ 102 V (1 k) | T | 20.7/58.3 |
| R502 | 7030003560 | S.RES ERJ3GEYJ 103 V (10 k) | T | 19.2/60.9 |
| R503 | 7030003440 | S.RES ERJ3GEYJ 102 V (1 k) | T | 22.2/58.3 |
| R504 | 7030003440 | S.RES ERJ3GEYJ 102 V (1 k) | T | 23.7/60.9 |
| R505 | 7030003320 | S.RES ERJ3GEYJ 101 V (100) | T | 26/61.7 |
| R506 | 7030003320 | S.RES ERJ3GEYJ 101 V (100) | T | 16.1/70.6 |
| R507 | 7030003440 | S.RES ERJ3GEYJ 102 V (1 k) | T | 22.2/72.4 |
| R508 | 7030003440 | S.RES ERJ3GEYJ 102 V (1 k) | T | 23.7/72.4 |
| R509 | 7030003320 | S.RES ERJ3GEYJ 101 V (100) | T | 26.7/72.4 |
| R510 | 7030003320 | S.RES ERJ3GEYJ 101 V (100) | T | 19.2/81.2 |
| R511 | 7030003320 | S.RES ERJ3GEYJ 101 V (100) | T | 21.4/87.5 |
| R512 | 7030003650 | S.RES ERJ3GEYJ 563 V (56 k) | B | 228.2/3.1 |
| R513 | 7030003860 | S.RES ERJ3GE JPW V | T | 103.9/68.7 |
| R514 | 7030003440 | S.RES ERJ3GEYJ 102 V (1 k) | T | 19.2/96.4 |
| R515 | 7030003410 | S.RES ERJ3GEYJ 561 V (560) | T | 26.6/96.4 |
| R516 | 7030003440 | S.RES ERJ3GEYJ 102 V (1 k) | T | 25.3/84.6 |
| R517 | 7030003520 | S.RES ERJ3GEYJ 472 V (4.7 k) | T | 23.2/84.6 |
| R518 | 7030003400 | S.RES ERJ3GEYJ 471 V (470) | B | 20.1/91.9 |
| R519 | 7030003560 | S.RES ERJ3GEYJ 103 V (10 k) | B | 20.1/89 |
| R520 | 7030003630 | S.RES ERJ3GEYJ 393 V (39 k) | B | 24.3/91.9 |
| R521 | 7030003600 | S.RES ERJ3GEYJ 223 V (22 k) | B | 24.3/87.7 |
| R522 | 7030003200 | S.RES ERJ3GEYJ 100 V (10) | B | 230.4/24.8 |
| R523 | 7030003360 | S.RES ERJ3GEYJ 221 V (220) | B | 27.9/87.7 |
| R524 | 7030003560 | S.RES ERJ3GEYJ 103 V (10 k) | B | 27.1/93.9 |
| R525 | 7030003480 | S.RES ERJ3GEYJ 222 V (2.2 k) | B | 31.3/91.9 |
| R526 | 7030003440 | S.RES ERJ3GEYJ 102 V (1 k) | B | 31.3/98.2 |
| R527 | 7030003560 | S.RES ERJ3GEYJ 103 V (10 k) | B | 31.3/94.9 |
| R528 | 7030003560 | S.RES ERJ3GEYJ 103 V (10 k) | B | 34.3/96.2 |
| R529 | 7030003560 | S.RES ERJ3GEYJ 103 V (10 k) | B | 34.3/89.7 |
| R530 | 7030003560 | S.RES ERJ3GEYJ 103 V (10 k) | B | 48.1/95.1 |
| R531 | 7030003560 | S.RES ERJ3GEYJ 103 V (10 k) | B | 48.1/82 |
| R532 | 7030003440 | S.RES ERJ3GEYJ 102 V (1 k) | B | 40.9/91.4 |
| R533 | 7030003560 | S.RES ERJ3GEYJ 103 V (10 k) | B | 44.5/91.4 |
| R534 | 7030003560 | S.RES ERJ3GEYJ 103 V (10 k) | T | 49.1/79.5 |
| R535 | 7030003440 | S.RES ERJ3GEYJ 102 V (1 k) | B | 49.9/82 |
| R536 | 7030003490 | S.RES ERJ3GEYJ 272 V (2.7 k) | B | 48.7/85.7 |
| R537 | 7030003320 | S.RES ERJ3GEYJ 101 V (100) | T | 53.5/84.4 |
| R538 | 7310005550 | S.TRI TMC3ADCJ4X (22 k) | T | 49.3/90.7 |
| R539 | 7030003400 | S.RES ERJ3GEYJ 471 V (470) | B | 51.7/95.1 |
| R540 | 7030003220 | S.RES ERJ3GEYJ 150 V (15) | B | 66.4/96.1 |
| R541 | 7030003380 | S.RES ERJ3GEYJ 331 V (330) | B | 64.3/96.9 |
| R543 | 7030003380 | S.RES ERJ3GEYJ 331 V (330) | B | 64.3/95.3 |
| R544 | 7030005671 | S.RES ERA3YKD 393V (39 k) | B | 229.4/17.7 |
| R545 | 7030004030 | S.RES ERJ3GEYJ 5R6 V (5.6) | B | 59.9/93.8 |
| R546 | 7030003430 | S.RES ERJ3GEYJ 821 V (820) | B | 58.7/90.7 |
| R547 | 7030003430 | S.RES ERJ3GEYJ 821 V (820) | B | 61.1/90.7 |
| R548 | 7030004030 | S.RES ERJ3GEYJ 5R6 V (5.6) | B | 80.6/93.8 |
| R549 | 7030003560 | S.RES ERJ3GEYJ 103 V (10 k) | T | 129.5/104.6 |
| R550 | 7030003560 | S.RES ERJ3GEYJ 103 V (10 k) | T | 132.8/106.5 |
| R551 | 7030003680 | S.RES ERJ3GEYJ 104 V (100 k) | T | 188.5/106.1 |
| R552 | 7030004040 | S.RES ERJ3GEYJ 4R7 V (4.7) | B | 101.6/88.7 |
| R553 | 7030009891 | S.RES ERA3YED 151V (150) | B | 108.3/85.2 |
| R554 | 7030003440 | S.RES ERJ3GEYJ 102 V (1 k) | B | 105.6/85.2 |
| R555 | 7510001491 | S.TMR NTCG16 3NH 681JT | B | 103.8/78 |
| R556 | 7030003480 | S.RES ERJ3GEYJ 222 V (2.2 k) | B | 103.8/80.6 |
| R557 | 7030005331 | S.RES ERA3YED 562V (5.6 k) | B | 229.4/23 |

M.=Mounted side (T: Mounted on the Top side, B: Mounted on the Bottom side)
S.=Surface mount

## [MAIN UNIT]

| REF NO. | ORDER NO. | DESCRIPTION | M. | H/V LOCATION |
|---|---|---|---|---|
| R558 | 7030003320 | S.RES ERJ3GEYJ 101 V (100) | B | 102.9/74.8 |
| R559 | 7030003680 | S.RES ERJ3GEYJ 104 V (100 k) | T | 132.8/105.2 |
| R560 | 7030003680 | S.RES ERJ3GEYJ 104 V (100 k) | T | 188.5/103.4 |
| R561 | 7030003680 | S.RES ERJ3GEYJ 104 V (100 k) | T | 133.6/102.4 |
| R562 | 7030003320 | S.RES ERJ3GEYJ 101 V (100) | B | 77.5/69.5 |
| R563 | 7030003300 | S.RES ERJ3GEYJ 680 V (68) | T | 110/62.7 |
| R564 | 7030003620 | S.RES ERJ3GEYJ 333 V (33 k) | T | 107.1/64.2 |
| R565 | 7030003640 | S.RES ERJ3GEYJ 473 V (47 k) | B | 234.6/4.6 |
| R566 | 7030003330 | S.RES ERJ3GEYJ 121 V (120) | T | 102.8/74.1 |
| R567 | 7030003230 | S.RES ERJ3GEYJ 180 V (18) | B | 91.4/67.6 |
| R568 | 7030009851 | S.RES ERA3YED 271V (270) | B | 93.4/66.8 |
| R569 | 7030009851 | S.RES ERA3YED 271V (270) | B | 89.3/66.8 |
| R570 | 7030003520 | S.RES ERJ3GEYJ 472 V (4.7 k) | T | 59.8/60.7 |
| R571 | 7030003560 | S.RES ERJ3GEYJ 103 V (10 k) | B | 64.5/59.2 |
| R572 | 7030004040 | S.RES ERJ3GEYJ 4R7 V (4.7) | T | 61.5/68.2 |
| R573 | 7030003400 | S.RES ERJ3GEYJ 471 V (470) | B | 68.2/59.2 |
| R574 | 7030003280 | S.RES ERJ3GEYJ 470 V (47) | T | 69.8/63.8 |
| R575 | 7030009851 | S.RES ERA3YED 271V (270) | B | 56.7/59.3 |
| R576 | 7030003230 | S.RES ERJ3GEYJ 180 V (18) | B | 54.6/58.5 |
| R577 | 7030009851 | S.RES ERA3YED 271V (270) | B | 56.7/57.7 |
| R578 | 7030003230 | S.RES ERJ3GEYJ 180 V (18) | B | 61.6/72 |
| R579 | 7030009851 | S.RES ERA3YED 271V (270) | B | 57.9/72.8 |
| R580 | 7030009851 | S.RES ERA3YED 271V (270) | B | 57.9/71 |
| R581 | 7030003430 | S.RES ERJ3GEYJ 821 V (820) | B | 92.6/72.9 |
| R582 | 7030004030 | S.RES ERJ3GEYJ 5R6 V (5.6) | B | 91.8/70.9 |
| R583 | 7030003430 | S.RES ERJ3GEYJ 821 V (820) | B | 94.2/70.8 |
| R584 | 7510001671 | S.TMR NTCG16 4BH 103JT | T | 218.4/79.9 |
| R585 | 7030003600 | S.RES ERJ3GEYJ 223 V (22 k) | B | 25/89.8 |
| R587 | 7030003200 | S.RES ERJ3GEYJ 100 V (10) | B | 61.5/68.1 |
| R589 | 7030003400 | S.RES ERJ3GEYJ 471 V (470) | B | 64.5/63.7 |
| R590 | 7030003430 | S.RES ERJ3GEYJ 821 V (820) | B | 79.8/91.7 |
| R591 | 7030003430 | S.RES ERJ3GEYJ 821 V (820) | B | 81.5/91.7 |
| R592 | 7030000300 | S.RES MCR10EZHJ 220 (221) | B | 59.4/61.8 |
| R601 | 7030000260 | S.RES MCR10EZHJ 100 (101) | B | 42.7/43.5 |
| R602 | 7030000260 | S.RES MCR10EZHJ 100 (101) | B | 53.5/43.5 |
| R603 | 7030000260 | S.RES MCR10EZHJ 100 (101) | B | 64.3/43.5 |
| R604 | 7030000260 | S.RES MCR10EZHJ 100 (101) | B | 75.2/43.5 |
| R605 | 7030000260 | S.RES MCR10EZHJ 100 (101) | B | 86/43.5 |
| R606 | 7030000260 | S.RES MCR10EZHJ 100 (101) | T | 34.3/43.5 |
| R607 | 7030000260 | S.RES MCR10EZHJ 100 (101) | T | 43.3/43.5 |
| R608 | 7030000260 | S.RES MCR10EZHJ 100 (101) | T | 52.3/43.5 |
| R609 | 7030000260 | S.RES MCR10EZHJ 100 (101) | T | 61.3/43.5 |
| R610 | 7030003400 | S.RES ERJ3GEYJ 471 V (470) | T | 79.8/54 |
| R611 | 7030000260 | S.RES MCR10EZHJ 100 (101) | T | 70.3/43.5 |
| R612 | 7030009851 | S.RES ERA3YED 271V (270) | T | 44/54 |
| R613 | 7030003230 | S.RES ERJ3GEYJ 180 V (18) | T | 46.2/53.3 |
| R614 | 7030009851 | S.RES ERA3YED 271V (270) | T | 44/52.7 |
| R801 | 7030003380 | S.RES ERJ3GEYJ 331 V (330) | T | 37.2/26.2 |
| R802 | 7030009891 | S.RES ERA3YED 151V (150) | B | 37.2/18.7 |
| R803 | 7030003440 | S.RES ERJ3GEYJ 102 V (1 k) | B | 49.7/21 |
| R804 | 7030003490 | S.RES ERJ3GEYJ 272 V (2.7 k) | B | 47.8/21.7 |
| R805 | 7030003300 | S.RES ERJ3GEYJ 680 V (68) | T | 57.6/18.7 |
| R806 | 7030003320 | S.RES ERJ3GEYJ 101 V (100) | T | 56.2/18.7 |
| R807 | 7030003320 | S.RES ERJ3GEYJ 101 V (100) | T | 56.9/16.5 |
| R808 | 7030003640 | S.RES ERJ3GEYJ 473 V (47 k) | B | 89.9/87.6 |
| R809 | 7030003460 | S.RES ERJ3GEYJ 152 V (1.5 k) | B | 84.7/87.6 |
| R810 | 7030003680 | S.RES ERJ3GEYJ 104 V (100 k) | T | 34/22.3 |
| R811 | 7030003560 | S.RES ERJ3GEYJ 103 V (10 k) | T | 30.8/19.6 |
| R812 | 7030009851 | S.RES ERA3YED 271V (270) | T | 34/27.5 |
| R813 | 7030003230 | S.RES ERJ3GEYJ 180 V (18) | T | 34/26.2 |
| R814 | 7030009851 | S.RES ERA3YED 271V (270) | T | 34/24.9 |
| R815 | 7030003320 | S.RES ERJ3GEYJ 101 V (100) | T | 31.9/25.5 |
| R816 | 7030003680 | S.RES ERJ3GEYJ 104 V (100 k) | T | 31.2/23.6 |
| R817 | 7030003860 | S.RES ERJ3GE JPW V | T | 52.7/23.9 |
| R818 | 7030003320 | S.RES ERJ3GEYJ 101 V (100) | B | 41.7/21 |
| R820 | 7030003440 | S.RES ERJ3GEYJ 102 V (1 k) | T | 77.7/62.7 |
| R821 | 7030003320 | S.RES ERJ3GEYJ 101 V (100) | T | 88.2/60.9 |
| R822 | 7030003620 | S.RES ERJ3GEYJ 333 V (33 k) | T | 88.2/57.9 |
| R823 | 7030003280 | S.RES ERJ3GEYJ 470 V (47) | T | 83.2/51.5 |
| R824 | 7030003320 | S.RES ERJ3GEYJ 101 V (100) | T | 77/58.6 |
| R825 | 7030003320 | S.RES ERJ3GEYJ 101 V (100) | T | 82.3/33.8 |
| R826 | 7030003230 | S.RES ERJ3GEYJ 180 V (18) | T | 87.2/36.2 |
| R827 | 7030009851 | S.RES ERA3YED 271V (270) | T | 85.2/37 |
| R828 | 7030009851 | S.RES ERA3YED 271V (270) | T | 85.2/35.5 |
| R829 | 7030003400 | S.RES ERJ3GEYJ 471 V (470) | T | 86.5/55.1 |
| R830 | 7030003330 | S.RES ERJ3GEYJ 121 V (120) | T | 86/53.2 |
| R831 | 7030003600 | S.RES ERJ3GEYJ 223 V (22 k) | T | 83.2/54.5 |
| R832 | 7030003290 | S.RES ERJ3GEYJ 560 V (56) | B | 87.3/71.1 |
| R833 | 7030003480 | S.RES ERJ3GEYJ 222 V (2.2 k) | B | 89.4/71.8 |
| R834 | 7030003440 | S.RES ERJ3GEYJ 102 V (1 k) | B | 85.3/79.2 |
| R835 | 7030003440 | S.RES ERJ3GEYJ 102 V (1 k) | B | 83.1/74.2 |
| R836 | 7030003500 | S.RES ERJ3GEYJ 332 V (3.3 k) | B | 83.2/79.1 |
| R837 | 7030003480 | S.RES ERJ3GEYJ 222 V (2.2 k) | T | 29.8/81.6 |
| R838 | 7030003510 | S.RES ERJ3GEYJ 392 V (3.9 k) | T | 33.6/73.8 |
| R839 | 7030003480 | S.RES ERJ3GEYJ 222 V (2.2 k) | T | 38.1/73.4 |
| R840 | 7030003400 | S.RES ERJ3GEYJ 471 V (470) | T | 38.1/72.1 |
| R841 | 7030003300 | S.RES ERJ3GEYJ 680 V (68) | T | 35.3/71.6 |
| R851 | 7030009861 | S.RES ERA3YED 471V (470) | T | 110/87.6 |
| R852 | 7030003560 | S.RES ERJ3GEYJ 103 V (10 k) | T | 37.9/69.8 |
| R900 | 7030003320 | S.RES ERJ3GEYJ 101 V (100) | T | 126.2/5.8 |
| R901 | 7030003320 | S.RES ERJ3GEYJ 101 V (100) | B | 125.2/5.8 |
| R902 | 7030003320 | S.RES ERJ3GEYJ 101 V (100) | T | 124.2/5.8 |
| R903 | 7030003320 | S.RES ERJ3GEYJ 101 V (100) | B | 123.2/5.8 |
| R904 | 7030003320 | S.RES ERJ3GEYJ 101 V (100) | T | 122.2/5.8 |
| R906 | 7030003320 | S.RES ERJ3GEYJ 101 V (100) | T | 120.2/5.8 |
| R908 | 7030003320 | S.RES ERJ3GEYJ 101 V (100) | T | 118.2/5.8 |
| R909 | 7030003320 | S.RES ERJ3GEYJ 101 V (100) | B | 117.2/5.8 |
| R910 | 7030003320 | S.RES ERJ3GEYJ 101 V (100) | T | 116.2/5.8 |
| R911 | 7030003320 | S.RES ERJ3GEYJ 101 V (100) | B | 115.2/5.8 |
| R912 | 7030003320 | S.RES ERJ3GEYJ 101 V (100) | T | 114.2/5.8 |
| R913 | 7030003320 | S.RES ERJ3GEYJ 101 V (100) | B | 113.2/5.8 |
| R914 | 7030003320 | S.RES ERJ3GEYJ 101 V (100) | T | 112.2/5.8 |
| R915 | 7030003320 | S.RES ERJ3GEYJ 101 V (100) | B | 111.2/5.8 |
| R916 | 7030003320 | S.RES ERJ3GEYJ 101 V (100) | T | 110.2/5.8 |

## [MAIN UNIT]

| REF NO. | ORDER NO. | DESCRIPTION | M. | H/V LOCATION |
|---|---|---|---|---|
| R917 | 7030003320 | S.RES ERJ3GEYJ 101 V (100) | B | 109.2/5.8 |
| R918 | 7030003320 | S.RES ERJ3GEYJ 101 V (100) | T | 13.8/119.5 |
| R920 | 7030003320 | S.RES ERJ3GEYJ 101 V (100) | T | 125.7/15.4 |
| R921 | 7030003320 | S.RES ERJ3GEYJ 101 V (100) | B | 124.7/15.4 |
| R922 | 7030003320 | S.RES ERJ3GEYJ 101 V (100) | T | 123.7/15.4 |
| R923 | 7030003320 | S.RES ERJ3GEYJ 101 V (100) | B | 122.7/15.4 |
| R924 | 7030003320 | S.RES ERJ3GEYJ 101 V (100) | T | 121.7/15.4 |
| R925 | 7030003320 | S.RES ERJ3GEYJ 101 V (100) | B | 120.7/15.4 |
| R926 | 7030003320 | S.RES ERJ3GEYJ 101 V (100) | T | 119.7/15.4 |
| R927 | 7030003320 | S.RES ERJ3GEYJ 101 V (100) | B | 118.7/15.4 |
| R928 | 7030003320 | S.RES ERJ3GEYJ 101 V (100) | T | 117.7/15.4 |
| R929 | 7030003320 | S.RES ERJ3GEYJ 101 V (100) | B | 116.7/15.4 |
| R930 | 7030003320 | S.RES ERJ3GEYJ 101 V (100) | T | 115.7/15.4 |
| R932 | 7030003320 | S.RES ERJ3GEYJ 101 V (100) | T | 113.7/15.4 |
| R933 | 7030003320 | S.RES ERJ3GEYJ 101 V (100) | B | 112.7/15.4 |
| R934 | 7030003320 | S.RES ERJ3GEYJ 101 V (100) | T | 111.7/15.4 |
| R936 | 7030003320 | S.RES ERJ3GEYJ 101 V (100) | T | 109.7/15.4 |
| R937 | 7030003320 | S.RES ERJ3GEYJ 101 V (100) | B | 108.7/15.4 |
| R938 | 7030003320 | S.RES ERJ3GEYJ 101 V (100) | T | 12.5/119.5 |
| R940 | 7030003320 | S.RES ERJ3GEYJ 101 V (100) | T | 94.3/5.8 |
| R941 | 7030003320 | S.RES ERJ3GEYJ 101 V (100) | B | 93.3/5.8 |
| R942 | 7030003320 | S.RES ERJ3GEYJ 101 V (100) | T | 92.3/5.8 |
| R943 | 7030003320 | S.RES ERJ3GEYJ 101 V (100) | B | 91.3/5.8 |
| R944 | 7030003320 | S.RES ERJ3GEYJ 101 V (100) | T | 90.3/5.8 |
| R945 | 7030003320 | S.RES ERJ3GEYJ 101 V (100) | B | 89.3/5.8 |
| R946 | 7030003320 | S.RES ERJ3GEYJ 101 V (100) | T | 88.3/5.8 |
| R947 | 7030003320 | S.RES ERJ3GEYJ 101 V (100) | B | 87.3/5.8 |
| R948 | 7030003320 | S.RES ERJ3GEYJ 101 V (100) | T | 86.3/5.8 |
| R949 | 7030003320 | S.RES ERJ3GEYJ 101 V (100) | B | 85.3/5.8 |
| R950 | 7030003320 | S.RES ERJ3GEYJ 101 V (100) | T | 84.3/5.8 |
| R951 | 7030003320 | S.RES ERJ3GEYJ 101 V (100) | B | 83.3/5.8 |
| R952 | 7030003320 | S.RES ERJ3GEYJ 101 V (100) | T | 82.3/5.8 |
| R953 | 7030003320 | S.RES ERJ3GEYJ 101 V (100) | B | 81.3/5.8 |
| R954 | 7030003320 | S.RES ERJ3GEYJ 101 V (100) | T | 80.3/5.8 |
| R955 | 7030003320 | S.RES ERJ3GEYJ 101 V (100) | B | 79.3/5.8 |
| R957 | 7030003320 | S.RES ERJ3GEYJ 101 V (100) | B | 77.3/5.8 |
| R958 | 7030003320 | S.RES ERJ3GEYJ 101 V (100) | T | 76.3/5.8 |
| R960 | 7030003320 | S.RES ERJ3GEYJ 101 V (100) | T | 93.8/15.3 |
| R961 | 7030003320 | S.RES ERJ3GEYJ 101 V (100) | B | 92.8/15.4 |
| R962 | 7030003320 | S.RES ERJ3GEYJ 101 V (100) | T | 91.8/15.3 |
| R963 | 7030003320 | S.RES ERJ3GEYJ 101 V (100) | B | 90.8/15.4 |
| R964 | 7030003320 | S.RES ERJ3GEYJ 101 V (100) | T | 89.8/15.3 |
| R966 | 7030003320 | S.RES ERJ3GEYJ 101 V (100) | T | 87.8/15.3 |
| R967 | 7030003320 | S.RES ERJ3GEYJ 101 V (100) | B | 86.8/15.4 |
| R968 | 7030003320 | S.RES ERJ3GEYJ 101 V (100) | T | 85.8/15.3 |
| R969 | 7030003320 | S.RES ERJ3GEYJ 101 V (100) | B | 84.8/15.4 |
| R970 | 7030003320 | S.RES ERJ3GEYJ 101 V (100) | T | 83.8/15.3 |
| R971 | 7030003320 | S.RES ERJ3GEYJ 101 V (100) | B | 82.8/15.4 |
| R972 | 7030003320 | S.RES ERJ3GEYJ 101 V (100) | T | 81.8/15.4 |
| R973 | 7030003320 | S.RES ERJ3GEYJ 101 V (100) | B | 80.8/15.4 |
| R974 | 7030003320 | S.RES ERJ3GEYJ 101 V (100) | T | 79.8/15.4 |
| R975 | 7030003320 | S.RES ERJ3GEYJ 101 V (100) | B | 78.8/15.4 |
| R976 | 7030003320 | S.RES ERJ3GEYJ 101 V (100) | T | 77.8/15.4 |
| R977 | 7030003320 | S.RES ERJ3GEYJ 101 V (100) | B | 76.8/15.4 |
| R978 | 7030003320 | S.RES ERJ3GEYJ 101 V (100) | T | 75.8/15.4 |
| R979 | 7030003320 | S.RES ERJ3GEYJ 101 V (100) | B | 74.8/15.4 |
| | | | | |
| C1 | 4030006880 | S.CER C1608 JB 1H 472K-T | B | 207.5/109.2 |
| C2 | 4030006880 | S.CER C1608 JB 1H 472K-T | T | 225.7/110.3 |
| C3 | 4030006880 | S.CER C1608 JB 1H 472K-T | B | 220.4/106.6 |
| C4 | 4030006880 | S.CER C1608 JB 1H 472K-T | T | 204.7/110.3 |
| C5 | 4030006880 | S.CER C1608 JB 1H 472K-T | T | 222.2/110.3 |
| C6 | 4030006880 | S.CER C1608 JB 1H 472K-T | T | 211.7/110.3 |
| C7 | 4030006880 | S.CER C1608 JB 1H 472K-T | T | 215.2/110.3 |
| C8 | 4030006880 | S.CER C1608 JB 1H 472K-T | T | 200.4/110.3 |
| C9 | 4030006880 | S.CER C1608 JB 1H 472K-T | T | 193.4/110.3 |
| C10 | 4030006880 | S.CER C1608 JB 1H 472K-T | T | 196.9/110.3 |
| C11 | 4030006880 | S.CER C1608 JB 1H 472K-T | B | 168/106.8 |
| C12 | 4030006880 | S.CER C1608 JB 1H 472K-T | T | 183.7/110.3 |
| C13 | 4030006880 | S.CER C1608 JB 1H 472K-T | B | 178.4/106.6 |
| C14 | 4030006880 | S.CER C1608 JB 1H 472K-T | T | 162.7/110.3 |
| C15 | 4030006880 | S.CER C1608 JB 1H 472K-T | T | 180.2/110.3 |
| C16 | 4030006880 | S.CER C1608 JB 1H 472K-T | T | 169.7/110.3 |
| C17 | 4030006880 | S.CER C1608 JB 1H 472K-T | T | 173.2/110.3 |
| C18 | 4030006880 | S.CER C1608 JB 1H 472K-T | T | 158.4/110.3 |
| C19 | 4030006880 | S.CER C1608 JB 1H 472K-T | T | 151.4/110.3 |
| C20 | 4030006880 | S.CER C1608 JB 1H 472K-T | T | 154.9/110.3 |
| C21 | 4030006880 | S.CER C1608 JB 1H 472K-T | B | 163.9/96.8 |
| C22 | 4030006880 | S.CER C1608 JB 1H 472K-T | B | 174.7/98 |
| C23 | 4030006880 | S.CER C1608 JB 1H 472K-T | B | 167.1/98.1 |
| C24 | 4030006880 | S.CER C1608 JB 1H 472K-T | B | 145.1/106.9 |
| C25 | 4510008540 | S.ELE EEE1CA100SR | T | 218.3/83.6 |
| C26 | 4510008540 | S.ELE EEE1CA100SR | T | 233.7/83.5 |
| C28 | 4510008540 | S.ELE EEE1CA100SR | T | 191.1/80.5 |
| C29 | 4510008540 | S.ELE EEE1CA100SR | T | 184.9/80.5 |
| C30 | 4510008540 | S.ELE EEE1CA100SR | T | 184.2/92.3 |
| C31 | 4030011600 | S.CER C1608 JB 1E 104K-T | T | 187.7/74.5 |
| C32 | 4510008540 | S.ELE EEE1CA100SR | T | 179/82.1 |
| C33 | 4510008540 | S.ELE EEE1CA100SR | T | 178.9/87 |
| C34 | 4030012600 | S.CER C2012 JB 1A 105M-T | T | 189/92.3 |
| C35 | 4030012600 | S.CER C2012 JB 1A 105M-T | T | 179.4/92.4 |
| C36 | 4510008500 | S.ELE EEE1CA101WP | T | 222.1/104.5 |
| C37 | 4510008540 | S.ELE EEE1CA100SR | T | 229.5/107.3 |
| C38 | 4510008500 | S.ELE EEE1CA101WP | T | 174.3/104.1 |
| C39 | 4510008540 | S.ELE EEE1CA100SR | T | 181.9/104.7 |
| C40 | 4510008540 | S.ELE EEE1CA100SR | T | 190/63.4 |
| C41 | 4510008540 | S.ELE EEE1CA100SR | T | 184/63.4 |
| C42 | 4030011600 | S.CER C1608 JB 1E 104K-T | T | 187.7/77.1 |
| C43 | 4030011600 | S.CER C1608 JB 1E 104K-T | T | 194.5/74.5 |
| C44 | 4030011600 | S.CER C1608 JB 1E 104K-T | T | 180.9/77.1 |
| C45 | 4030012600 | S.CER C2012 JB 1A 105M-T | T | 193.3/83.8 |
| C46 | 4030012600 | S.CER C2012 JB 1A 105M-T | T | 193.3/90.9 |
| C50 | 4030006880 | S.CER C1608 JB 1H 472K-T | B | 139.6/118.5 |

M.=Mounted side (T: Mounted on the Top side, B: Mounted on the Bottom side)
S.=Surface mount

## [MAIN UNIT]

| REF NO. | ORDER NO. | DESCRIPTION | | M. | H/V LOCATION |
|---|---|---|---|---|---|
| C51 | 4010005380 | CER | HM13SJ YB 472K 500V | | |
| C52 | 4030006880 | S.CER | C1608 JB 1H 472K-T | B | 114.5/98.6 |
| C53 | 4030006880 | S.CER | C1608 JB 1H 472K-T | B | 116.2/96.3 |
| C54 | 4030006880 | S.CER | C1608 JB 1H 472K-T | B | 79.9/123.6 |
| C55 | 4030006880 | S.CER | C1608 JB 1H 472K-T | B | 79.9/118.7 |
| C56 | 4030006880 | S.CER | C1608 JB 1H 472K-T | B | 92.8/106.5 |
| C57 | 4030010760 | S.CER | C1608 CH 1H 331J-T | T | 179.5/70.9 |
| C58 | 4030010760 | S.CER | C1608 CH 1H 331J-T | T | 194.6/70.7 |
| C61 | 4030012600 | S.CER | C2012 JB 1A 105M-T | T | 119.1/77.8 |
| C62 | 4030012600 | S.CER | C2012 JB 1A 105M-T | T | 119.1/76 |
| C65 | 4030012600 | S.CER | C2012 JB 1A 105M-T | B | 108.1/76.2 |
| C68 | 4030006860 | S.CER | C1608 JB 1H 102K-T | B | 126.4/101.9 |
| C69 | 4030011600 | S.CER | C1608 JB 1E 104K-T | T | 121.5/90.8 |
| C70 | 4030011600 | S.CER | C1608 JB 1E 104K-T | B | 122.1/89.4 |
| C71 | 4030011600 | S.CER | C1608 JB 1E 104K-T | B | 136.8/96.8 |
| C80 | 4030007130 | S.CER | C1608 CH 1H 101J-T | B | 59.2/122.2 |
| C100 | 4030011600 | S.CER | C1608 JB 1E 104K-T | B | 208.4/91 |
| C101 | 4030011600 | S.CER | C1608 JB 1E 104K-T | T | 213.4/87.4 |
| C103 | 4510008550 | S.ELE | EEE1HA010SR | T | 210.7/83.6 |
| C105 | 4030011600 | S.CER | C1608 JB 1E 104K-T | B | 201.6/91 |
| C106 | 4030011600 | S.CER | C1608 JB 1E 104K-T | T | 206.6/87.4 |
| C108 | 4510008550 | S.ELE | EEE1HA010SR | T | 202.9/83.6 |
| C110 | 4510008540 | S.ELE | EEE1CA100SR | T | 209.8/63.3 |
| C113 | 4510008540 | S.ELE | EEE1CA100SR | T | 209.8/73.8 |
| C115 | 4510008540 | S.ELE | EEE1CA100SR | T | 209.8/48.7 |
| C116 | 4510008540 | S.ELE | EEE1CA100SR | T | 209.8/38.1 |
| C117 | 4510009120 | S.ELE | EEE1VA2R2NR | T | 215.7/73.8 |
| C118 | 4510009120 | S.ELE | EEE1VA2R2NR | T | 203.9/73.8 |
| C120 | 4510008540 | S.ELE | EEE1CA100SR | T | 223.6/50.7 |
| C121 | 4510008540 | S.ELE | EEE1CA100SR | T | 214.3/58 |
| C122 | 4510008540 | S.ELE | EEE1CA100SR | T | 204.7/58 |
| C123 | 4510008550 | S.ELE | EEE1HA010SR | T | 227/56.1 |
| C124 | 4510008550 | S.ELE | EEE1HA010SR | T | 227.1/60.9 |
| C125 | 4510008540 | S.ELE | EEE1CA100SR | T | 218.8/67 |
| C126 | 4510008540 | S.ELE | EEE1CA100SR | T | 223.6/67 |
| C127 | 4510008550 | S.ELE | EEE1HA010SR | T | 234.1/60.9 |
| C128 | 4510008550 | S.ELE | EEE1HA010SR | T | 233.3/56.1 |
| C129 | 4030008650 | S.CER | C1608 JB 1H 332K-T | T | 215.6/67.3 |
| C130 | 4030008650 | S.CER | C1608 JB 1H 332K-T | T | 203.8/67.3 |
| C131 | 4030012600 | S.CER | C2012 JB 1A 105M-T | T | 220.3/52 |
| C132 | 4030012600 | S.CER | C2012 JB 1A 105M-T | T | 218.5/52 |
| C133 | 4030008880 | S.CER | C1608 JB 1H 223K-T | T | 232.2/66.6 |
| C134 | 4030008950 | S.CER | C2012 JB 1C 823K-T | T | 231.3/69 |
| C135 | 4030008880 | S.CER | C1608 JB 1H 223K-T | T | 234.1/52.3 |
| C136 | 4030008950 | S.CER | C2012 JB 1C 823K-T | T | 232.4/50.1 |
| C140 | 4510008550 | S.ELE | EEE1HA010SR | T | 249.6/35.6 |
| C141 | 4510008190 | ELE | EEUFC1E222S | | |
| C142 | 4510009080 | S.ELE | EEE1HAR22SR | T | 253.9/59.1 |
| C143 | 4510008500 | S.ELE | EEE1CA101WP | T | 253.3/67.9 |
| C144 | 4510008180 | ELE | EEUFC1E102S | | |
| C145 | 4510008180 | ELE | EEUFC1E102S | | |
| C146 | 4030011600 | S.CER | C1608 JB 1E 104K-T | B | 252.2/101.3 |
| C147 | 4030011600 | S.CER | C1608 JB 1E 104K-T | B | 242.4/107.8 |
| C148 | 4030006880 | S.CER | C1608 JB 1H 472K-T | B | 247.8/97.2 |
| C149 | 4030006880 | S.CER | C1608 JB 1H 472K-T | B | 252.2/95.4 |
| C150 | 4030006880 | S.CER | C1608 JB 1H 472K-T | B | 239.9/97.2 |
| C151 | 4030011600 | S.CER | C1608 JB 1E 104K-T | T | 228.6/73.1 |
| C152 | 4030011600 | S.CER | C1608 JB 1E 104K-T | T | 233.4/45.5 |
| C180 | 4510009010 | S.ELE | EEE1AA221P | T | 188.5/50.4 |
| C181 | 4510008540 | S.ELE | EEE1CA100SR | T | 209.5/58 |
| C182 | 4510008540 | S.ELE | EEE1CA100SR | T | 199.9/58 |
| C183 | 4510008540 | S.ELE | EEE1CA100SR | T | 194.4/57.3 |
| C184 | 4510008540 | S.ELE | EEE1CA100SR | T | 195.8/52.5 |
| C185 | 4510008540 | S.ELE | EEE1CA100SR | T | 195.8/47.7 |
| C186 | 4510008540 | S.ELE | EEE1CA100SR | T | 180.2/50.5 |
| C187 | 4030011600 | S.CER | C1608 JB 1E 104K-T | T | 183.3/39.5 |
| C188 | 4510008540 | S.ELE | EEE1CA100SR | T | 194.4/42.8 |
| C189 | 4510008540 | S.ELE | EEE1CA100SR | T | 180.2/45.6 |
| C190 | 4030011340 | S.CER | C1608 CH 1H 471J-T | T | 194.6/33.4 |
| C191 | 4030012610 | S.CER | C2012 JB 1C 474K-T | T | 191.1/37.7 |
| C192 | 4030011340 | S.CER | C1608 CH 1H 471J-T | T | 180.4/35.4 |
| C193 | 4510008540 | S.ELE | EEE1CA100SR | T | 186.8/31.6 |
| C194 | 4030012600 | S.CER | C2012 JB 1A 105M-T | T | 180.9/59.4 |
| C195 | 4030012600 | S.CER | C2012 JB 1A 105M-T | T | 180.7/54.6 |
| C196 | 4510008500 | S.ELE | EEE1CA101WP | T | 176.1/36.5 |
| C197 | 4510008500 | S.ELE | EEE1CA101WP | T | 199.7/31.9 |
| C198 | 4030011600 | S.CER | C1608 JB 1E 104K-T | T | 125.6/95.8 |
| C200 | 4510008540 | S.ELE | EEE1CA100SR | T | 153.3/80.5 |
| C201 | 4510008540 | S.ELE | EEE1CA100SR | T | 160.5/80 |
| C203 | 4510008550 | S.ELE | EEE1HA010SR | T | 170.6/70.7 |
| C204 | 4510008550 | S.ELE | EEE1HA010SR | T | 142.1/70.9 |
| C205 | 4030011600 | S.CER | C1608 JB 1E 104K-T | B | 148.2/71.8 |
| C206 | 4030009970 | S.CER | C1608 JB 1H 182K-T | T | 192/33.4 |
| C207 | 4030009970 | S.CER | C1608 JB 1H 182K-T | T | 181.1/33.6 |
| C208 | 4030011600 | S.CER | C1608 JB 1E 104K-T | T | 219/42.5 |
| C209 | 4030011600 | S.CER | C1608 JB 1E 104K-T | B | 244/25.5 |
| C210 | 4510008550 | S.ELE | EEE1HA010SR | T | 168.1/100.5 |
| C211 | 4510008540 | S.ELE | EEE1CA100SR | T | 160.5/84.8 |
| C212 | 4510008530 | S.ELE | EEE1HA2R2SR | T | 169.7/94.9 |
| C213 | 4030017840 | S.CER | C2012 CH 1H 222J-T | T | 166.7/91.5 |
| C214 | 4510008540 | S.ELE | EEE1CA100SR | T | 170.6/85.3 |
| C215 | 4510008550 | S.ELE | EEE1HA010SR | T | 150.5/85.3 |
| C216 | 4510008550 | S.ELE | EEE1HA010SR | T | 142.6/85.3 |
| C217 | 4030007120 | S.CER | C1608 CH 1H 820J-T | T | 164.9/73.5 |
| C220 | 4510008550 | S.ELE | EEE1HA010SR | T | 163.3/100.5 |
| C221 | 4510008540 | S.ELE | EEE1CA100SR | T | 170.6/90.1 |
| C222 | 4510008530 | S.ELE | EEE1HA2R2SR | T | 151.3/94.9 |
| C223 | 4030017840 | S.CER | C2012 CH 1H 222J-T | T | 154.3/91.5 |
| C225 | 4510008550 | S.ELE | EEE1HA010SR | T | 150.5/90.1 |
| C226 | 4510008550 | S.ELE | EEE1HA010SR | T | 142.6/90.2 |
| C230 | 4510008500 | S.ELE | EEE1CA101WP | T | 68.9/10.5 |
| C231 | 4510008500 | S.ELE | EEE1CA101WP | T | 84.1/21.9 |
| C233 | 4510008550 | S.ELE | EEE1HA010SR | T | 69.8/16.5 |
| C234 | 4030007170 | S.CER | C1608 CH 1H 221J-T | T | 73/20.3 |

## [MAIN UNIT]

| REF NO. | ORDER NO. | DESCRIPTION | | M. | H/V LOCATION |
|---|---|---|---|---|---|
| C235 | 4030011600 | S.CER | C1608 JB 1E 104K-T | T | 79.1/22 |
| C241 | 4510008540 | S.ELE | EEE1CA100SR | T | 232.1/28.1 |
| C242 | 4510004591 | ELE | 16 ME 470 HC | | |
| C243 | 4510008500 | S.ELE | EEE1CA101WP | T | 176.7/63 |
| C244 | 4030011600 | S.CER | C1608 JB 1E 104K-T | T | 176/56.8 |
| C249 | 4030011600 | S.CER | C1608 JB 1E 104K-T | T | 160.3/68.3 |
| C250 | 4030011600 | S.CER | C1608 JB 1E 104K-T | T | 133.1/39.1 |
| C251 | 4030011600 | S.CER | C1608 JB 1E 104K-T | T | 143.3/32.8 |
| C260 | 4030011600 | S.CER | C1608 JB 1E 104K-T | T | 133.1/53.5 |
| C261 | 4030011600 | S.CER | C1608 JB 1E 104K-T | T | 143.2/47.1 |
| C290 | 4030011600 | S.CER | C1608 JB 1E 104K-T | T | 149.1/28.2 |
| C291 | 4030011600 | S.CER | C1608 JB 1E 104K-T | T | 142.9/38.1 |
| C310 | 4030011600 | S.CER | C1608 JB 1E 104K-T | T | 153.7/43.3 |
| C311 | 4030011600 | S.CER | C1608 JB 1E 104K-T | T | 142.9/52.6 |
| C330 | 4030011600 | S.CER | C1608 JB 1E 104K-T | T | 154.6/58.5 |
| C331 | 4030011600 | S.CER | C1608 JB 1E 104K-T | T | 154.6/63.5 |
| C332 | 4030011600 | S.CER | C1608 JB 1E 104K-T | T | 162.4/55.9 |
| C333 | 4030011600 | S.CER | C1608 JB 1E 104K-T | T | 164.7/66.8 |
| C340 | 4030017810 | S.CER | C1608 CH 1H 102J-T | B | 206/97 |
| C341 | 4030017810 | S.CER | C1608 CH 1H 102J-T | B | 191.2/97 |
| C342 | 4030011600 | S.CER | C1608 JB 1E 104K-T | B | 199.8/26.2 |
| C343 | 4030007130 | S.CER | C1608 CH 1H 101J-T | B | 211.8/97 |
| C344 | 4510008590 | S.ELE | EEE1AA101SP | T | 209.7/30.6 |
| C351 | 4510008540 | S.ELE | EEE1CA100SR | T | 132.4/89.7 |
| C352 | 4030011600 | S.CER | C1608 JB 1E 104K-T | T | 127.1/84 |
| C360 | 4030017810 | S.CER | C1608 CH 1H 102J-T | B | 153.8/96.9 |
| C361 | 4030017810 | S.CER | C1608 CH 1H 102J-T | B | 141.8/92.7 |
| C362 | 4030011600 | S.CER | C1608 JB 1E 104K-T | B | 144.7/27.5 |
| C363 | 4030007130 | S.CER | C1608 CH 1H 101J-T | B | 157.1/96.9 |
| C364 | 4510008590 | S.ELE | EEE1AA101SP | T | 152.8/14.7 |
| C380 | 4030017810 | S.CER | C1608 CH 1H 102J-T | B | 27.6/37.6 |
| C381 | 4030017810 | S.CER | C1608 CH 1H 102J-T | B | 27.7/52.4 |
| C383 | 4030007130 | S.CER | C1608 CH 1H 101J-T | B | 16.5/52.2 |
| C384 | 4510008590 | S.ELE | EEE1AA101SP | T | 92.9/45.8 |
| C400 | 4030006880 | S.CER | C1608 JB 1H 472K-T | T | 240.5/11.7 |
| C401 | 4030006880 | S.CER | C1608 JB 1H 472K-T | B | 234.8/15.5 |
| C402 | 4030006880 | S.CER | C1608 JB 1H 472K-T | B | 238.1/15.5 |
| C403 | 4030006880 | S.CER | C1608 JB 1H 472K-T | T | 230.5/16 |
| C404 | 4030006880 | S.CER | C1608 JB 1H 472K-T | T | 231.9/13.1 |
| C405 | 4030006880 | S.CER | C1608 JB 1H 472K-T | T | 43.2/12.9 |
| C406 | 4030006880 | S.CER | C1608 JB 1H 472K-T | T | 31.1/15.3 |
| C407 | 4030006880 | S.CER | C1608 JB 1H 472K-T | T | 43.2/11.6 |
| C408 | 4030006880 | S.CER | C1608 JB 1H 472K-T | T | 32/12.6 |
| C409 | 4030006880 | S.CER | C1608 JB 1H 472K-T | T | 30.7/12.6 |
| C410 | 4030006880 | S.CER | C1608 JB 1H 472K-T | T | 14.7/41 |
| C411 | 4030006880 | S.CER | C1608 JB 1H 472K-T | B | 14.7/39.6 |
| C412 | 4030006880 | S.CER | C1608 JB 1H 472K-T | T | 14.7/38 |
| C413 | 4030006880 | S.CER | C1608 JB 1H 472K-T | B | 14.7/36.4 |
| C414 | 4030006880 | S.CER | C1608 JB 1H 472K-T | B | 12.7/33 |
| C415 | 4030006880 | S.CER | C1608 JB 1H 472K-T | T | 12.8/32 |
| C416 | 4030006880 | S.CER | C1608 JB 1H 472K-T | B | 12.8/31 |
| C418 | 4030006880 | S.CER | C1608 JB 1H 472K-T | B | 12/28.2 |
| C430 | 4030006880 | S.CER | C1608 JB 1H 472K-T | B | 9/68.9 |
| C431 | 4030006880 | S.CER | C1608 JB 1H 472K-T | B | 9/70.9 |
| C432 | 4030006880 | S.CER | C1608 JB 1H 472K-T | B | 9/72.9 |
| C435 | 4030006880 | S.CER | C1608 JB 1H 472K-T | B | 9/74.5 |
| C440 | 4030006880 | S.CER | C1608 JB 1H 472K-T | T | 166.2/13.5 |
| C441 | 4030006880 | S.CER | C1608 JB 1H 472K-T | T | 158.9/13.1 |
| C442 | 4030006880 | S.CER | C1608 JB 1H 472K-T | T | 162.6/15.7 |
| C450 | 4030006880 | S.CER | C1608 JB 1H 472K-T | B | 250.3/14.2 |
| C451 | 4030006880 | S.CER | C1608 JB 1H 472K-T | T | 241.8/10.8 |
| C452 | 4030006880 | S.CER | C1608 JB 1H 472K-T | B | 244/23.7 |
| C453 | 4030006880 | S.CER | C1608 JB 1H 472K-T | B | 244/27.3 |
| C454 | 4030006880 | S.CER | C1608 JB 1H 472K-T | B | 244.1/29 |
| C455 | 4030006880 | S.CER | C1608 JB 1H 472K-T | B | 244.1/32.3 |
| C456 | 4030006880 | S.CER | C1608 JB 1H 472K-T | B | 250.4/39.6 |
| C460 | 4510008550 | S.ELE | EEE1HA010SR | T | 142.1/80.5 |
| C461 | 4510008550 | S.ELE | EEE1HA010SR | T | 170.6/75.7 |
| C464 | 4510008540 | S.ELE | EEE1CA100SR | T | 153.3/75.7 |
| C465 | 4030011600 | S.CER | C1608 JB 1E 104K-T | B | 144.1/75.4 |
| C466 | 4030011600 | S.CER | C1608 JB 1E 104K-T | B | 148.2/75.4 |
| C467 | 4030012600 | S.CER | C2012 JB 1A 105M-T | T | 139.3/76.4 |
| C469 | 4510008550 | S.ELE | EEE1HA010SR | T | 170.6/80.5 |
| C470 | 4510008550 | S.ELE | EEE1HA010SR | T | 153.3/70.9 |
| C480 | 4550007320 | S.TAN | F930J226MAABMA | B | 216.6/32.3 |
| C481 | 4550007320 | S.TAN | F930J226MAABMA | B | 208.7/31.3 |
| C483 | 4550007320 | S.TAN | F930J226MAABMA | B | 156/16.2 |
| C484 | 4550007320 | S.TAN | F930J226MAABMA | B | 163.9/15.2 |
| C486 | 4550007320 | S.TAN | F930J226MAABMA | B | 93.6/55.4 |
| C487 | 4550007320 | S.TAN | F930J226MAABMA | B | 93.5/47.5 |
| C489 | 4030011600 | S.CER | C1608 JB 1E 104K-T | B | 220.9/31.1 |
| C490 | 4030011600 | S.CER | C1608 JB 1E 104K-T | B | 150.2/13.6 |
| C491 | 4030011600 | S.CER | C1608 JB 1E 104K-T | B | 89.8/57 |
| C492 | 4030006880 | S.CER | C1608 JB 1H 472K-T | T | 207.6/13 |
| C493 | 4510008540 | S.ELE | EEE1CA100SR | T | 205.4/3.8 |
| C494 | 4510004591 | ELE | 16 ME 470 HC | | |
| C495 | 4030011600 | S.CER | C1608 JB 1E 104K-T | B | 26.3/123 |
| C496 | 4030011600 | S.CER | C1608 JB 1E 104K-T | B | 5.7/119.9 |
| C497 | 4030011600 | S.CER | C1608 JB 1E 104K-T | T | 12.7/122.5 |
| C498 | 4510004591 | ELE | 16 ME 470 HC | | |
| C499 | 4030011600 | S.CER | C1608 JB 1E 104K-T | B | 229.4/26.6 |
| C501 | 4030011600 | S.CER | C1608 JB 1E 104K-T | T | 19.2/58.3 |
| C502 | 4030010020 | S.CER | C1608 JB 1H 122K-T | T | 23.7/58.3 |
| C503 | 4030009980 | S.CER | C1608 JB 1H 152K-T | T | 22.2/60.9 |
| C505 | 4030011330 | S.CER | C1608 CH 1H 391J-T | T | 25.2/58.3 |
| C506 | 4030011600 | S.CER | C1608 JB 1E 104K-T | T | 26/64.4 |
| C507 | 4510008540 | S.ELE | EEE1CA100SR | T | 29.1/66.3 |
| C508 | 4510008540 | S.ELE | EEE1CA100SR | T | 16.1/66.3 |
| C509 | 4030011600 | S.CER | C1608 JB 1E 104K-T | T | 19.2/66.5 |
| C510 | 4030008470 | S.CER | C1608 JB 1H 272K-T | T | 20.7/72.4 |
| C511 | 4030011280 | S.CER | C1608 CH 1H 271J-T | T | 25.2/72.4 |
| C512 | 4030011600 | S.CER | C1608 JB 1E 104K-T | T | 26/76.8 |
| C513 | 4510008540 | S.ELE | EEE1CA100SR | T | 29.1/77.7 |
| C514 | 4030011600 | S.CER | C1608 JB 1E 104K-T | T | 19.2/78.4 |

M.=Mounted side (T: Mounted on the Top side, B: Mounted on the Bottom side)
S.=Surface mount

## [MAIN UNIT]

| REF NO. | ORDER NO. | DESCRIPTION | M. | H/V LOCATION |
|---|---|---|---|---|
| C515 | 4510008540 | S.ELE EEE1CA100SR | T | 16.1/78.2 |
| C516 | 4030006860 | S.CER C1608 JB 1H 102K-T | T | 22.7/87.5 |
| C517 | 4030011600 | S.CER C1608 JB 1E 104K-T | T | 20.3/91.9 |
| C518 | 4030011600 | S.CER C1608 JB 1E 104K-T | T | 25.3/87.5 |
| C519 | 4030011600 | S.CER C1608 JB 1E 104K-T | T | 26.6/87.5 |
| C520 | 4510008540 | S.ELE EEE1CA100SR | T | 30.4/86.7 |
| C521 | 4030011600 | S.CER C1608 JB 1E 104K-T | T | 24/87.5 |
| C522 | 4030011600 | S.CER C1608 JB 1E 104K-T | B | 18.6/91.9 |
| C523 | 4030011600 | S.CER C1608 JB 1E 104K-T | B | 21.6/91.9 |
| C524 | 4510008540 | S.ELE EEE1CA100SR | T | 29.7/97 |
| C525 | 4030006880 | S.CER C1608 JB 1H 472K-T | T | 26.1/91.9 |
| C526 | 4030011600 | S.CER C1608 JB 1E 104K-T | B | 26.1/87.7 |
| C527 | 4030006880 | S.CER C1608 JB 1H 472K-T | B | 29.5/91.9 |
| C528 | 4030011600 | S.CER C1608 JB 1E 104K-T | B | 29.5/94.9 |
| C529 | 4030011600 | S.CER C1608 JB 1E 104K-T | B | 33.5/87.1 |
| C530 | 4030011600 | S.CER C1608 JB 1E 104K-T | B | 33.5/98.8 |
| C531 | 4030006880 | S.CER C1608 JB 1H 472K-T | B | 37.2/94.6 |
| C532 | 4030006880 | S.CER C1608 JB 1H 472K-T | B | 37.2/91.3 |
| C533 | 4030006880 | S.CER C1608 JB 1H 472K-T | B | 46.3/95.1 |
| C534 | 4030006880 | S.CER C1608 JB 1H 472K-T | B | 46.3/82 |
| C535 | 4030006880 | S.CER C1608 JB 1H 472K-T | B | 47.3/88.5 |
| C536 | 4030011600 | S.CER C1608 JB 1E 104K-T | B | 42.7/91.4 |
| C537 | 4030006880 | S.CER C1608 JB 1H 472K-T | B | 51.7/82 |
| C538 | 4030008920 | S.CER C1608 JB 1H 473K-T | B | 50.5/85.7 |
| C539 | 4030011600 | S.CER C1608 JB 1E 104K-T | T | 52.2/84.4 |
| C540 | 4510008540 | S.ELE EEE1CA100SR | T | 49.1/84.5 |
| C541 | 4030011600 | S.CER C1608 JB 1E 104K-T | B | 49.9/95.1 |
| C544 | 4030009530 | S.CER C1608 CH 1H 030B-T | T | 88.8/94.2 |
| C545 | 4030011600 | S.CER C1608 JB 1E 104K-T | T | 131.8/108 |
| C546 | 4030011340 | S.CER C1608 CH 1H 471J-T | B | 69.8/90.7 |
| C548 | 4030011600 | S.CER C1608 JB 1E 104K-T | T | 128.7/102.3 |
| C550 | 4510008540 | S.ELE EEE1CA100SR | T | 127.4/108 |
| C551 | 4030006880 | S.CER C1608 JB 1H 472K-T | B | 101.6/91.6 |
| C552 | 4030006860 | S.CER C1608 JB 1H 102K-T | B | 106.4/82.7 |
| C553 | 4030011770 | S.CER C1608 CH 1H 060B-T | B | 104.8/82.7 |
| C554 | 4030011600 | S.CER C1608 JB 1E 104K-T | B | 103/79.3 |
| C555 | 4030007030 | S.CER C1608 CH 1H 150J-T | B | 97.9/80.1 |
| C556 | 4030006880 | S.CER C1608 JB 1H 472K-T | B | 102.9/76.5 |
| C558 | 4030007040 | S.CER C1608 CH 1H 180J-T | T | 81.9/69.4 |
| C559 | 4030006880 | S.CER C1608 JB 1H 472K-T | T | 108.4/67.1 |
| C560 | 4030007080 | S.CER C1608 CH 1H 390J-T | T | 108.4/64.2 |
| C561 | 4030006880 | S.CER C1608 JB 1H 472K-T | T | 105/71.3 |
| C562 | 4030006860 | S.CER C1608 JB 1H 102K-T | B | 105.6/64.2 |
| C563 | 4030011600 | S.CER C1608 JB 1E 104K-T | T | 98.8/71.3 |
| C564 | 4030007080 | S.CER C1608 CH 1H 390J-T | B | 75.9/67.2 |
| C565 | 4030007130 | S.CER C1608 CH 1H 101J-T | B | 72.5/68.9 |
| C566 | 4030007120 | S.CER C1608 CH 1H 820J-T | B | 69.4/68.5 |
| C567 | 4030007090 | S.CER C1608 CH 1H 470J-T | B | 69.4/70.3 |
| C568 | 4030007130 | S.CER C1608 CH 1H 101J-T | B | 67.1/69.1 |
| C569 | 4030011600 | S.CER C1608 JB 1E 104K-T | B | 62.8/68.1 |
| C570 | 4030006900 | S.CER C1608 JB 1H 103K-T | B | 62.9/59.2 |
| C571 | 4030011600 | S.CER C1608 JB 1E 104K-T | B | 58.8/66 |
| C572 | 4030006900 | S.CER C1608 JB 1H 103K-T | B | 60/58.4 |
| C573 | 4030011600 | S.CER C1608 JB 1E 104K-T | B | 66.7/59.2 |
| C574 | 4030011600 | S.CER C1608 JB 1E 104K-T | B | 53.3/57 |
| C576 | 4610001590 | S.TRI TZC3R100A110R00 | T | 95.5/95.8 |
| C577 | 4030011600 | S.CER C1608 JB 1E 104K-T | B | 54.6/63 |
| C578 | 4030007100 | S.CER C1608 CH 1H 560J-T | B | 91.4/74.5 |
| C579 | 4030006980 | S.CER C1608 CH 1H 070D-T | B | 89.2/76.8 |
| C580 | 4030007100 | S.CER C1608 CH 1H 560J-T | B | 93.2/76.5 |
| C581 | 4030007050 | S.CER C1608 CH 1H 220J-T | B | 22.6/69.5 |
| C582 | 4030007050 | S.CER C1608 CH 1H 220J-T | T | 20.7/84.6 |
| C583 | 4030011600 | S.CER C1608 JB 1E 104K-T | T | 27.2/81.6 |
| C584 | 4030009650 | S.CER C1608 CH 1H 240J-T | B | 104.5/67.3 |
| C585 | 4030006980 | S.CER C1608 CH 1H 070D-T | B | 102.9/67.3 |
| C586 | 4030007070 | S.CER C1608 CH 1H 330J-T | B | 98.5/70.2 |
| C587 | 4030007010 | S.CER C1608 CH 1H 100D-T | B | 97/64.9 |
| C588 | 4030007060 | S.CER C1608 CH 1H 270J-T | B | 96.5/70.2 |
| C589 | 4030007020 | S.CER C1608 CH 1H 120J-T | B | 63.8/72.8 |
| C590 | 4030007100 | S.CER C1608 CH 1H 560J-T | B | 62.1/74.5 |
| C601 | 4030006860 | S.CER C1608 JB 1H 102K-T | B | 40.9/52.4 |
| C602 | 4030006860 | S.CER C1608 JB 1H 102K-T | B | 42.7/52.4 |
| C603 | 4030011600 | S.CER C1608 JB 1E 104K-T | B | 40.9/49.1 |
| C604 | 4030007140 | S.CER C1608 CH 1H 121J-T | B | 38.1/49.8 |
| C605 | 4030010760 | S.CER C1608 CH 1H 331J-T | B | 38.1/48 |
| C606 | 4030007160 | S.CER C1608 CH 1H 181J-T | B | 33.8/45.5 |
| C607 | 4030007060 | S.CER C1608 CH 1H 270J-T | B | 35.6/45.5 |
| C608 | 4030010760 | S.CER C1608 CH 1H 331J-T | B | 38.1/46.2 |
| C609 | 4030007090 | S.CER C1608 CH 1H 470J-T | B | 38.1/40.8 |
| C610 | 4030007160 | S.CER C1608 CH 1H 181J-T | B | 35.6/41.5 |
| C611 | 4030007060 | S.CER C1608 CH 1H 270J-T | B | 33.8/41.5 |
| C612 | 4030007140 | S.CER C1608 CH 1H 121J-T | B | 38.1/37.1 |
| C613 | 4030010760 | S.CER C1608 CH 1H 331J-T | B | 38.1/39 |
| C614 | 4030006860 | S.CER C1608 JB 1H 102K-T | B | 40.9/34.5 |
| C615 | 4030011600 | S.CER C1608 JB 1E 104K-T | B | 40.9/37.8 |
| C616 | 4030006860 | S.CER C1608 JB 1H 102K-T | B | 42.7/34.5 |
| C617 | 4030010040 | S.CER C1608 JB 1H 561K-T | B | 51.7/52.4 |
| C618 | 4030010760 | S.CER C1608 CH 1H 331J-T | B | 53.5/52.4 |
| C619 | 4030011600 | S.CER C1608 JB 1E 104K-T | B | 51.7/49.1 |
| C620 | 4030010760 | S.CER C1608 CH 1H 331J-T | B | 48.9/49.8 |
| C621 | 4030007080 | S.CER C1608 CH 1H 390J-T | B | 48.9/48 |
| C622 | 4030007080 | S.CER C1608 CH 1H 390J-T | B | 44.5/45.5 |
| C623 | 4030010760 | S.CER C1608 CH 1H 331J-T | B | 46.4/45.5 |
| C624 | 4030007090 | S.CER C1608 CH 1H 470J-T | B | 48.9/46.2 |
| C625 | 4030010760 | S.CER C1608 CH 1H 331J-T | B | 48.9/40.8 |
| C626 | 4030007080 | S.CER C1608 CH 1H 390J-T | B | 46.4/41.5 |
| C627 | 4030010760 | S.CER C1608 CH 1H 331J-T | B | 44.6/41.5 |
| C628 | 4030007080 | S.CER C1608 CH 1H 390J-T | B | 48.9/37.1 |
| C629 | 4030010760 | S.CER C1608 CH 1H 331J-T | B | 48.9/39 |
| C630 | 4030010760 | S.CER C1608 CH 1H 331J-T | B | 51.7/34.5 |
| C631 | 4030011600 | S.CER C1608 JB 1E 104K-T | B | 51.7/37.8 |
| C632 | 4030010040 | S.CER C1608 JB 1H 561K-T | B | 53.5/34.5 |
| C633 | 4030010040 | S.CER C1608 JB 1H 561K-T | B | 62.5/52.4 |
| C634 | 4030011330 | S.CER C1608 CH 1H 391J-T | B | 64.3/52.4 |

## [MAIN UNIT]

| REF NO. | ORDER NO. | DESCRIPTION | M. | H/V LOCATION |
|---|---|---|---|---|
| C635 | 4030011600 | S.CER C1608 JB 1E 104K-T | B | 62.5/49.1 |
| C636 | 4030007160 | S.CER C1608 CH 1H 181J-T | B | 59.7/49.8 |
| C637 | 4030007070 | S.CER C1608 CH 1H 330J-T | B | 59.7/48 |
| C638 | 4030007030 | S.CER C1608 CH 1H 150J-T | B | 55.4/45.5 |
| C639 | 4030007120 | S.CER C1608 CH 1H 820J-T | B | 57.2/45.5 |
| C640 | 4030007100 | S.CER C1608 CH 1H 560J-T | B | 59.7/46.2 |
| C641 | 4030007140 | S.CER C1608 CH 1H 121J-T | B | 59.7/40.8 |
| C642 | 4030007030 | S.CER C1608 CH 1H 150J-T | B | 57.2/41.5 |
| C643 | 4030007120 | S.CER C1608 CH 1H 820J-T | B | 55.4/41.5 |
| C644 | 4030007070 | S.CER C1608 CH 1H 330J-T | B | 59.7/37.1 |
| C645 | 4030007160 | S.CER C1608 CH 1H 181J-T | B | 59.7/39 |
| C646 | 4030011330 | S.CER C1608 CH 1H 391J-T | B | 62.5/34.5 |
| C647 | 4030011600 | S.CER C1608 JB 1E 104K-T | B | 62.5/37.8 |
| C648 | 4030017800 | S.CER C1608 CH 1H 561J-T | B | 64.3/34.5 |
| C649 | 4030010760 | S.CER C1608 CH 1H 331J-T | B | 73.4/52.4 |
| C650 | 4030007150 | S.CER C1608 CH 1H 151J-T | B | 75.2/52.4 |
| C651 | 4030011600 | S.CER C1608 JB 1E 104K-T | B | 73.4/49.1 |
| C652 | 4030007150 | S.CER C1608 CH 1H 151J-T | B | 70.5/49.8 |
| C653 | 4030007060 | S.CER C1608 CH 1H 270J-T | B | 70.5/48 |
| C654 | 4030007060 | S.CER C1608 CH 1H 270J-T | B | 66.2/45.5 |
| C655 | 4030007140 | S.CER C1608 CH 1H 121J-T | B | 68/45.5 |
| C656 | 4030007010 | S.CER C1608 CH 1H 100D-T | B | 70.5/46.2 |
| C657 | 4030007150 | S.CER C1608 CH 1H 151J-T | B | 70.5/40.8 |
| C658 | 4030007060 | S.CER C1608 CH 1H 270J-T | B | 68/41.5 |
| C659 | 4030007140 | S.CER C1608 CH 1H 121J-T | B | 66.2/41.5 |
| C660 | 4030007060 | S.CER C1608 CH 1H 270J-T | B | 70.5/37.1 |
| C661 | 4030007150 | S.CER C1608 CH 1H 151J-T | B | 70.5/39 |
| C662 | 4030007150 | S.CER C1608 CH 1H 151J-T | B | 73.3/34.5 |
| C663 | 4030011600 | S.CER C1608 JB 1E 104K-T | B | 73.3/37.8 |
| C664 | 4030010760 | S.CER C1608 CH 1H 331J-T | B | 75.2/34.5 |
| C665 | 4030007170 | S.CER C1608 CH 1H 221J-T | B | 84.2/52.4 |
| C666 | 4030007170 | S.CER C1608 CH 1H 221J-T | B | 86/52.4 |
| C667 | 4030011600 | S.CER C1608 JB 1E 104K-T | B | 84.2/49.1 |
| C668 | 4030007130 | S.CER C1608 CH 1H 101J-T | B | 81.4/49.8 |
| C669 | 4030007050 | S.CER C1608 CH 1H 220J-T | B | 81.4/48 |
| C670 | 4030007080 | S.CER C1608 CH 1H 390J-T | B | 77.1/45.5 |
| C671 | 4030007070 | S.CER C1608 CH 1H 330J-T | B | 78.9/45.5 |
| C672 | 4030007050 | S.CER C1608 CH 1H 220J-T | B | 81.4/40.8 |
| C673 | 4030007120 | S.CER C1608 CH 1H 820J-T | B | 81.4/46.2 |
| C674 | 4030007080 | S.CER C1608 CH 1H 390J-T | B | 78.9/41.5 |
| C675 | 4030007070 | S.CER C1608 CH 1H 330J-T | B | 77.1/41.5 |
| C676 | 4030007050 | S.CER C1608 CH 1H 220J-T | B | 81.4/37.1 |
| C677 | 4030007130 | S.CER C1608 CH 1H 101J-T | B | 81.4/39 |
| C678 | 4030007170 | S.CER C1608 CH 1H 221J-T | B | 84.2/34.5 |
| C679 | 4030011600 | S.CER C1608 JB 1E 104K-T | B | 84.2/37.8 |
| C680 | 4030007170 | S.CER C1608 CH 1H 221J-T | B | 86/34.5 |
| C681 | 4030007170 | S.CER C1608 CH 1H 221J-T | T | 34.3/50.7 |
| C682 | 4030007110 | S.CER C1608 CH 1H 680J-T | T | 35.6/50.7 |
| C683 | 4030011600 | S.CER C1608 JB 1E 104K-T | T | 35.6/47.9 |
| C684 | 4030007090 | S.CER C1608 CH 1H 470J-T | T | 38.3/47.1 |
| C685 | 4030007090 | S.CER C1608 CH 1H 470J-T | T | 38.3/45.8 |
| C686 | 4030007070 | S.CER C1608 CH 1H 330J-T | T | 40.4/46.4 |
| C687 | 4030007070 | S.CER C1608 CH 1H 330J-T | T | 41.7/46.4 |
| C688 | 4030007010 | S.CER C1608 CH 1H 100D-T | T | 36.1/43.5 |
| C689 | 4030007120 | S.CER C1608 CH 1H 820J-T | T | 37.4/43.5 |
| C690 | 4030007070 | S.CER C1608 CH 1H 330J-T | T | 41.7/40.5 |
| C691 | 4030007070 | S.CER C1608 CH 1H 330J-T | T | 40.4/40.5 |
| C692 | 4030007090 | S.CER C1608 CH 1H 470J-T | T | 37.8/41 |
| C693 | 4030007090 | S.CER C1608 CH 1H 470J-T | T | 37.8/39.7 |
| C694 | 4030007110 | S.CER C1608 CH 1H 680J-T | T | 34.3/36.2 |
| C695 | 4030011600 | S.CER C1608 JB 1E 104K-T | T | 35.6/39 |
| C696 | 4030007050 | S.CER C1608 CH 1H 220J-T | T | 35.6/36.2 |
| C697 | 4030007160 | S.CER C1608 CH 1H 181J-T | T | 44/51.4 |
| C698 | 4030007090 | S.CER C1608 CH 1H 470J-T | T | 44/50.1 |
| C699 | 4030011600 | S.CER C1608 JB 1E 104K-T | T | 44.6/47.9 |
| C700 | 4030007090 | S.CER C1608 CH 1H 470J-T | T | 46.8/47.1 |
| C701 | 4030007040 | S.CER C1608 CH 1H 180J-T | T | 46.8/45.8 |
| C702 | 4030007030 | S.CER C1608 CH 1H 150J-T | T | 49.3/46.4 |
| C703 | 4030007050 | S.CER C1608 CH 1H 220J-T | T | 50.7/46.4 |
| C704 | 4030006990 | S.CER C1608 CH 1H 080D-T | T | 46.4/43.5 |
| C705 | 4030007090 | S.CER C1608 CH 1H 470J-T | T | 45.1/43.5 |
| C706 | 4030007030 | S.CER C1608 CH 1H 150J-T | T | 49.3/40.5 |
| C707 | 4030007050 | S.CER C1608 CH 1H 220J-T | T | 50.7/40.5 |
| C708 | 4030007040 | S.CER C1608 CH 1H 180J-T | T | 46.8/41 |
| C709 | 4030007090 | S.CER C1608 CH 1H 470J-T | T | 46.8/39.7 |
| C710 | 4030007090 | S.CER C1608 CH 1H 470J-T | T | 43.3/36.2 |
| C711 | 4030011600 | S.CER C1608 JB 1E 104K-T | T | 44.6/39 |
| C712 | 4030007160 | S.CER C1608 CH 1H 181J-T | T | 44.6/36.2 |
| C713 | 4030007140 | S.CER C1608 CH 1H 121J-T | T | 53.6/50.7 |
| C714 | 4030007040 | S.CER C1608 CH 1H 180J-T | T | 52.3/50.7 |
| C715 | 4030011600 | S.CER C1608 JB 1E 104K-T | T | 53.6/47.9 |
| C716 | 4030007070 | S.CER C1608 CH 1H 330J-T | T | 55.8/47.1 |
| C717 | 4030007040 | S.CER C1608 CH 1H 180J-T | T | 55.8/45.8 |
| C718 | 4030007010 | S.CER C1608 CH 1H 100D-T | T | 58.4/46.4 |
| C719 | 4030007070 | S.CER C1608 CH 1H 330J-T | T | 59.7/46.4 |
| C720 | 4030007010 | S.CER C1608 CH 1H 100D-T | T | 54.1/43.5 |
| C721 | 4030007090 | S.CER C1608 CH 1H 470J-T | T | 55.4/43.5 |
| C722 | 4030007010 | S.CER C1608 CH 1H 100D-T | T | 58.4/40.5 |
| C723 | 4030007070 | S.CER C1608 CH 1H 330J-T | T | 59.7/40.5 |
| C724 | 4030007040 | S.CER C1608 CH 1H 180J-T | T | 55.8/41 |
| C725 | 4030007070 | S.CER C1608 CH 1H 330J-T | T | 55.8/39.7 |
| C726 | 4030007040 | S.CER C1608 CH 1H 180J-T | T | 52.3/36.2 |
| C727 | 4030011600 | S.CER C1608 JB 1E 104K-T | T | 53.6/39 |
| C728 | 4030007140 | S.CER C1608 CH 1H 121J-T | T | 53.6/36.2 |
| C729 | 4030007130 | S.CER C1608 CH 1H 101J-T | T | 62.6/50.7 |
| C730 | 4030007030 | S.CER C1608 CH 1H 150J-T | T | 61.3/50.7 |
| C731 | 4030011600 | S.CER C1608 JB 1E 104K-T | T | 62.6/47.9 |
| C732 | 4030007050 | S.CER C1608 CH 1H 220J-T | T | 64.8/47.1 |
| C733 | 4030007020 | S.CER C1608 CH 1H 120J-T | T | 64.8/45.8 |
| C734 | 4030009500 | S.CER C1608 CH 1H 0R5B-T | T | 67.4/46.4 |
| C735 | 4030007050 | S.CER C1608 CH 1H 220J-T | T | 68.7/46.4 |
| C736 | 4030006980 | S.CER C1608 CH 1H 070D-T | T | 63.1/43.5 |
| C737 | 4030007050 | S.CER C1608 CH 1H 220J-T | T | 64.4/43.5 |
| C738 | 4030009500 | S.CER C1608 CH 1H 0R5B-T | T | 67.4/40.5 |

M.=Mounted side (T: Mounted on the Top side, B: Mounted on the Bottom side)
S.=Surface mount

## [MAIN UNIT]

| REF NO. | ORDER NO. | DESCRIPTION | M. | H/V LOCATION |
|---|---|---|---|---|
| C739 | 4030007050 | S.CER C1608 CH 1H 220J-T | T | 68.7/40.5 |
| C740 | 4030007020 | S.CER C1608 CH 1H 120J-T | T | 64.8/41 |
| C741 | 4030007050 | S.CER C1608 CH 1H 220J-T | T | 64.8/39.7 |
| C742 | 4030007030 | S.CER C1608 CH 1H 150J-T | T | 61.3/36.2 |
| C743 | 4030011600 | S.CER C1608 JB 1E 104K-T | T | 62.6/39 |
| C744 | 4030007130 | S.CER C1608 CH 1H 101J-T | T | 62.6/36.2 |
| C745 | 4030007140 | S.CER C1608 CH 1H 121J-T | T | 73.5/49.6 |
| C747 | 4030011600 | S.CER C1608 JB 1E 104K-T | T | 71.5/48.8 |
| C749 | 4030009550 | S.CER C1608 CH 1H 2R5B-T | T | 75.9/46.2 |
| C750 | 4030011770 | S.CER C1608 CH 1H 060B-T | T | 73.8/46.9 |
| C751 | 4030007010 | S.CER C1608 CH 1H 100D-T | T | 73.8/45.5 |
| C755 | 4030009550 | S.CER C1608 CH 1H 2R5B-T | T | 75.9/41 |
| C756 | 4030011770 | S.CER C1608 CH 1H 060B-T | T | 73.8/40.2 |
| C758 | 4030011600 | S.CER C1608 JB 1E 104K-T | T | 71.5/38.1 |
| C759 | 4030007140 | S.CER C1608 CH 1H 121J-T | T | 73.5/37.3 |
| C760 | 4030011770 | S.CER C1608 CH 1H 060B-T | T | 73.8/48.2 |
| C761 | 4030011770 | S.CER C1608 CH 1H 060B-T | T | 73.8/41.8 |
| C801 | 4030006880 | S.CER C1608 JB 1H 472K-T | T | 37.2/20.6 |
| C802 | 4030011600 | S.CER C1608 JB 1E 104K-T | T | 37.2/27.5 |
| C803 | 4030011600 | S.CER C1608 JB 1E 104K-T | B | 37.2/20.5 |
| C804 | 4030011600 | S.CER C1608 JB 1E 104K-T | T | 46.9/19.9 |
| C805 | 4030011600 | S.CER C1608 JB 1E 104K-T | B | 52/24.6 |
| C806 | 4030006900 | S.CER C1608 JB 1H 103K-T | B | 48.5/23.7 |
| C807 | 4030011600 | S.CER C1608 JB 1E 104K-T | T | 48.5/23.9 |
| C812 | 4030006900 | S.CER C1608 JB 1H 103K-T | B | 86.2/84.7 |
| C813 | 4030006880 | S.CER C1608 JB 1H 472K-T | T | 31.2/27.5 |
| C814 | 4030012600 | S.CER C2012 JB 1A 105M-T | T | 27.7/25.5 |
| C815 | 4030006990 | S.CER C1608 CH 1H 080D-T | B | 44.3/21 |
| C816 | 4030012600 | S.CER C2012 JB 1A 105M-T | T | 30.9/29 |
| C817 | 4030011330 | S.CER C1608 CH 1H 391J-T | T | 85.2/55.1 |
| C818 | 4030017810 | S.CER C1608 CH 1H 102J-T | T | 83.2/53.2 |
| C819 | 4030009920 | S.CER C1608 CH 1H 050B-T | T | 83.2/55.8 |
| C820 | 4030006900 | S.CER C1608 JB 1H 103K-T | T | 74.6/62.1 |
| C821 | 4030011600 | S.CER C1608 JB 1E 104K-T | T | 87.4/62.8 |
| C822 | 4030011600 | S.CER C1608 JB 1E 104K-T | T | 78.3/58.6 |
| C823 | 4030012600 | S.CER C2012 JB 1A 105M-T | T | 86.2/51.5 |
| C824 | 4030006900 | S.CER C1608 JB 1H 103K-T | T | 83.6/49.8 |
| C825 | 4030008880 | S.CER C1608 JB 1H 223K-T | T | 84.4/47.8 |
| C826 | 4030008850 | S.CER C1608 JB 1H 123K-T | T | 82.3/46.8 |
| C827 | 4030008850 | S.CER C1608 JB 1H 123K-T | T | 82.3/45.5 |
| C828 | 4030006900 | S.CER C1608 JB 1H 103K-T | T | 85.7/42.7 |
| C829 | 4030008860 | S.CER C1608 JB 1H 153K-T | T | 82.3/42.7 |
| C830 | 4030008860 | S.CER C1608 JB 1H 153K-T | T | 82.3/41.4 |
| C831 | 4030008650 | S.CER C1608 JB 1H 332K-T | T | 84.4/39.8 |
| C832 | 4030006900 | S.CER C1608 JB 1H 103K-T | T | 82.3/39.6 |
| C833 | 4030006900 | S.CER C1608 JB 1H 103K-T | T | 82.3/38.3 |
| C834 | 4030012600 | S.CER C2012 JB 1A 105M-T | T | 82.1/35.4 |
| C835 | 4030011600 | S.CER C1608 JB 1E 104K-T | T | 82.3/37 |
| C836 | 4030009920 | S.CER C1608 CH 1H 050B-T | T | 89.5/57.9 |
| C837 | 4550006470 | S.TAN TEESVB2 1D 106M8R | T | 72.9/58.7 |
| C838 | 4550006470 | S.TAN TEESVB2 1D 106M8R | T | 91.8/61.6 |
| C839 | 4030006880 | S.CER C1608 JB 1H 472K-T | B | 85.3/74.2 |
| C840 | 4030011600 | S.CER C1608 JB 1E 104K-T | B | 86/81.4 |
| C841 | 4030006880 | S.CER C1608 JB 1H 472K-T | B | 81.2/78.3 |
| C845 | 4030011600 | S.CER C1608 JB 1E 104K-T | T | 35.3/69.8 |
| C846 | 4030011600 | S.CER C1608 JB 1E 104K-T | T | 38.1/74.7 |
| C847 | 4510008540 | S.ELE EEE1CA100SR | T | 37.1/77.8 |
| C901 | 4030006880 | S.CER C1608 JB 1H 472K-T | B | 125.2/1.8 |
| C902 | 4030006880 | S.CER C1608 JB 1H 472K-T | T | 124.2/1.8 |
| C903 | 4030006880 | S.CER C1608 JB 1H 472K-T | B | 123.2/1.8 |
| C904 | 4030006880 | S.CER C1608 JB 1H 472K-T | T | 122.2/1.8 |
| C905 | 4030006880 | S.CER C1608 JB 1H 472K-T | B | 121.2/1.8 |
| C906 | 4030006880 | S.CER C1608 JB 1H 472K-T | T | 120.2/1.8 |
| C907 | 4030006880 | S.CER C1608 JB 1H 472K-T | B | 119.2/1.8 |
| C908 | 4030006880 | S.CER C1608 JB 1H 472K-T | T | 118.2/1.8 |
| C909 | 4030006880 | S.CER C1608 JB 1H 472K-T | B | 117.2/1.8 |
| C922 | 4030006880 | S.CER C1608 JB 1H 472K-T | T | 123.7/18.9 |
| C923 | 4030006880 | S.CER C1608 JB 1H 472K-T | B | 122.7/19.4 |
| C924 | 4030006880 | S.CER C1608 JB 1H 472K-T | T | 121.7/18.9 |
| C925 | 4030006880 | S.CER C1608 JB 1H 472K-T | B | 120.7/19.4 |
| C926 | 4030006880 | S.CER C1608 JB 1H 472K-T | T | 119.7/18.9 |
| C927 | 4030006880 | S.CER C1608 JB 1H 472K-T | B | 118.7/19.4 |
| C928 | 4030006880 | S.CER C1608 JB 1H 472K-T | T | 117.7/18.9 |
| C929 | 4030006880 | S.CER C1608 JB 1H 472K-T | B | 116.7/19.4 |
| C930 | 4030006880 | S.CER C1608 JB 1H 472K-T | T | 115.7/18.9 |
| C932 | 4030006880 | S.CER C1608 JB 1H 472K-T | T | 113.7/18.9 |
| C933 | 4030006880 | S.CER C1608 JB 1H 472K-T | B | 112.7/19.4 |
| C934 | 4030006880 | S.CER C1608 JB 1H 472K-T | T | 111.7/18.9 |
| C936 | 4030006880 | S.CER C1608 JB 1H 472K-T | T | 109.7/18.9 |
| C937 | 4030006880 | S.CER C1608 JB 1H 472K-T | B | 108.7/19.4 |
| C945 | 4030006880 | S.CER C1608 JB 1H 472K-T | B | 89.3/1.8 |
| C946 | 4030006880 | S.CER C1608 JB 1H 472K-T | T | 88.3/1.8 |
| C947 | 4030006880 | S.CER C1608 JB 1H 472K-T | B | 87.3/1.8 |
| C948 | 4030006880 | S.CER C1608 JB 1H 472K-T | T | 86.3/1.8 |
| C952 | 4030006880 | S.CER C1608 JB 1H 472K-T | T | 82.3/1.8 |
| C953 | 4030006880 | S.CER C1608 JB 1H 472K-T | B | 81.3/1.8 |
| C954 | 4030006880 | S.CER C1608 JB 1H 472K-T | T | 80.3/1.8 |
| C955 | 4030006880 | S.CER C1608 JB 1H 472K-T | B | 79.3/1.8 |
| C957 | 4030006880 | S.CER C1608 JB 1H 472K-T | B | 77.3/1.8 |
| C958 | 4030006880 | S.CER C1608 JB 1H 472K-T | T | 76.3/1.9 |
| C974 | 4030006880 | S.CER C1608 JB 1H 472K-T | T | 79.8/19.4 |
| C975 | 4030006880 | S.CER C1608 JB 1H 472K-T | B | 78.8/19.3 |
| C976 | 4030006880 | S.CER C1608 JB 1H 472K-T | T | 77.8/19.4 |
| C977 | 4030006880 | S.CER C1608 JB 1H 472K-T | B | 76.8/19.3 |
| C978 | 4030006880 | S.CER C1608 JB 1H 472K-T | T | 75.8/19.4 |
| C979 | 4030006880 | S.CER C1608 JB 1H 472K-T | B | 74.8/19.3 |
| C980 | 4030006880 | S.CER C1608 JB 1H 472K-T | T | 12.8/30 |
| C981 | 4030006880 | S.CER C1608 JB 1H 472K-T | T | 126.2/1.8 |
| RL50 | 6330000540 | RLY 2-1419131-2 (OMR-109F) | | |
| RL140 | 6330001430 | RLY NA-12W-K | | |
| RL141 | 6330001430 | RLY NA-12W-K | | |

## [MAIN UNIT]

| REF NO. | ORDER NO. | DESCRIPTION | M. | H/V LOCATION |
|---|---|---|---|---|
| CP81 | 6910009670 | S.CHK HK3-S-T | T | 129.3/16.1 |
| CP82 | 6910009670 | S.CHK HK3-S-T | T | 116.4/75.1 |
| CP495 | 6910009670 | S.CHK HK3-S-T | T | 129.1/5.8 |
| CP496 | 6910009670 | S.CHK HK3-S-T | T | 107.1/5.8 |
| J1 | 6510023671 | CNR TCS4480-0141577 | | |
| J2 | 6510023661 | CNR TCS4470-0141577 | | |
| J3 | 6510023671 | CNR TCS4480-0141577 | | |
| J4 | 6510023661 | CNR TCS4470-0141577 | | |
| J5 | 6450001130 | CNR JPJ2042-01-110 | | |
| J6 | 6510023730 | CNR LGY6502-0600C | | |
| J7 | 6510023730 | CNR LGY6502-0600C | | |
| J8 | 6510023740 | CNR LGR4609-7000 | | |
| J9 | 6510024940 | CNR HEC2305-016250 | | |
| J140 | 6510023720 | CNR LGY6501-0600C | | |
| J141 | 6510023720 | CNR LGY6501-0600C | | |
| J142 | 6510018961 | S.CNR B2B-PH-SM4-TB (LF) (SN) | T | 256.2/96.5 |
| J340 | 6510022811 | CNR IMSA-9180B-22B-PT1 | | |
| J341 | 6510021651 | CNR IMSA-9180B-30B-PT1 | | |
| J360 | 6510022811 | CNR IMSA-9180B-22B-PT1 | | |
| J361 | 6510021651 | CNR IMSA-9180B-30B-PT1 | | |
| J380 | 6510022811 | CNR IMSA-9180B-22B-PT1 | | |
| J381 | 6510021651 | CNR IMSA-9180B-30B-PT1 | | |
| J399 | 6510007020 | CNR TMP-J01X-V6 | | |
| J400 | 6510019981 | S.CNR 52808-1671 (1690) | T | 232.7/5 |
| J401 | 6510022191 | S.CNR B3B-PH-SM4-TB (LF) (SN) | T | 232.7/98.9 |
| J403 | 6510019981 | S.CNR 52808-1671 (1690) | T | 32.5/5 |
| J404 | 6510022191 | S.CNR B3B-PH-SM4-TB (LF) (SN) | T | 143.8/115.4 |
| J410 | 6510020001 | S.CNR 52808-3071 (3090) | T | 5.5/42.5 |
| J411 | 6510019971 | S.CNR 52808-1071 | T | 5.6/98.7 |
| J430 | 6510022311 | S.CNR B5B-PH-SM4-TB (LF) (SN) | T | 5/72.9 |
| J440 | 6510018921 | S.CNR B8B-PH-SM4-TB (LF) (SN) | T | 154.5/5 |
| J450 | 6510003471 | CNR B11B-EH-S (LF) (SN) | | |
| J451 | 6510018941 | S.CNR B13B-PH-SM4-TB (LF) (SN) | T | 184.2/5 |
| J490 | 6510023750 | CNR 01K1971-10 | | |
| J491 | 6510007020 | CNR TMP-J01X-V6 | | |
| J492 | 6510014961 | S.CNR B2B-ZR-SM4-TF (LF) (SN) | T | 202.6/11.5 |
| J495 | 6510023701 | CNR TORX178S (F) | | |
| J496 | 6510023711 | CNR TOTX178S (F) | | |
| J501 | 6510007020 | CNR TMP-J01X-V6 | | |
| J502 | 6510007020 | CNR TMP-J01X-V6 | | |
| J503 | 6510007020 | CNR TMP-J01X-V6 | | |
| J801 | 6510007020 | CNR TMP-J01X-V6 | | |
| J802 | 6510007020 | CNR TMP-J01X-V6 | | |
| J808 | 6510007020 | CNR TMP-J01X-V6 | | |
| J900 | 6510022471 | S.CNR 40FLT-SM2-TB (LF) (SN) | T | 116.5/10.6 |
| J901 | 6510015541 | S.CNR B4B-ZR-SM4-TF (LF) (SN) | T | 9.2/113 |
| J940 | 6510022471 | S.CNR 40FLT-SM2-TB (LF) (SN) | T | 84.6/10.6 |
| F1 | 5220000230 | HOL S-N5054 #01 | | |
| F2 | 5220000230 | HOL S-N5054 #01 | | |
| F3 | 5210000041 | FUS FGB 2A PBF (FGB0 125V) | | |
| W1 | 9024801019 | JMP 74/98/020/X98/X98 | | |
| EP50 | 6910012350 | S.BEA MMZ1608Y 102BT | B | 78.1/126.8 |
| EP51 | 6910012350 | S.BEA MMZ1608Y 102BT | B | 95.6/118.7 |
| EP52 | 6910012350 | S.BEA MMZ1608Y 102BT | B | 90.1/126.1 |
| EP403 | 6910012350 | S.BEA MMZ1608Y 102BT | T | 233.2/10.4 |
| EP404 | 6910012350 | S.BEA MMZ1608Y 102BT | T | 231.9/10.4 |
| EP408 | 6910012350 | S.BEA MMZ1608Y 102BT | T | 32.1/10 |
| EP409 | 6910012350 | S.BEA MMZ1608Y 102BT | T | 30.8/10 |
| EP414 | 6910012350 | S.BEA MMZ1608Y 102BT | T | 9.9/34 |
| EP415 | 6910012350 | S.BEA MMZ1608Y 102BT | B | 9.9/31 |
| EP416 | 6910012350 | S.BEA MMZ1608Y 102BT | B | 10.2/95 |
| EP417 | 6910012350 | S.BEA MMZ1608Y 102BT | T | 10.2/96.2 |
| EP420 | 6910012350 | S.BEA MMZ1608Y 102BT | B | 10.1/101.2 |
| EP421 | 6910012350 | S.BEA MMZ1608Y 102BT | T | 10.1/102.2 |
| EP430 | 6910012350 | S.BEA MMZ1608Y 102BT | B | 5.8/68.9 |
| EP431 | 6910012350 | S.BEA MMZ1608Y 102BT | B | 5.8/70.9 |
| EP432 | 6910012350 | S.BEA MMZ1608Y 102BT | B | 5.8/72.9 |
| EP501 | 9088000010 | TUB IRRAX 1.5 (d) L=12 mm | | |
| EP905 | 6910012350 | S.BEA MMZ1608Y 102BT | B | 121.2/5.8 |
| EP907 | 6910012350 | S.BEA MMZ1608Y 102BT | B | 119.2/5.8 |

M.=Mounted side (T: Mounted on the Top side, B: Mounted on the Bottom side)
S.=Surface mount

## [DSP-A BOARD]

| REF NO. | ORDER NO. | DESCRIPTION | | M. | H/V LOCATION |
|---|---|---|---|---|---|
| IC1 | 1140012211 | S.IC | TMS320C6713BZDP225 | T | 28.1/20.4 |
| IC151 | 1130008361 | S.IC | TC7SHU04FU (TE85L,JF) | B | 45.5/8.1 |
| IC171 | 1130008041 | S.IC | TC7SH04FU (TE85L,JF) | T | 41.3/4.6 |
| IC181 | 1130011150 | S.IC | SN74AHC2G08HDCTR | T | 30.2/1.9 |
| IC191 | 1130011150 | S.IC | SN74AHC2G08HDCTR | T | 24/3.5 |
| IC201 | 1130013492 | S.IC | AT29LV040A-15TU | B | 29/42 |
| IC203 | 1110006411 | S.IC | R3111N111A-TR-F | T | 30/36.5 |
| IC301 | 1110006100 | S.IC | NJM5534MD-TE1 | T | 72.3/44.7 |
| IC331 | 1130009981 | S.IC | TC7W53FK (TE85L,F) | T | 76.9/34.1 |
| IC341 | 1110006100 | S.IC | NJM5534MD-TE1 | T | 70.3/35.5 |
| IC371 | 1110006100 | S.IC | NJM5534MD-TE1 | T | 59.4/44.3 |
| IC401 | 1110006111 | S.IC | AK5394AVSP/P | T | 54.2/31 |
| IC451 | 1130006891 | S.IC | TC7S04FU (TE85R,F) | T | 43.5/41 |
| IC452 | 1130012160 | S.IC | SN74LVC1GU04DCKR | T | 42.8/38.5 |
| IC501 | 1110001901 | S.IC | uPC4570G2-E1-A | T | 71.6/27.4 |
| IC551 | 1130013090 | S.IC | AK4396VFP-E2/P | T | 54.6/7.3 |
| IC601 | 1110006100 | S.IC | NJM5534MD-TE1 | T | 63.6/17.3 |
| IC651 | 1110006100 | S.IC | NJM5534MD-TE1 | T | 66.8/7.2 |
| IC701 | 1110006100 | S.IC | NJM5534MD-TE1 | T | 74.1/17.5 |
| IC771 | 1110004770 | S.IC | BU9480F-E2 | T | 51.7/18.4 |
| Q1 | 1590000680 | S.TR | DTC114EUA T106 | T | 45.7/16.5 |
| D501 | 1730002320 | S.ZEN | MA8051-M (TX) | B | 76.5/29.5 |
| FI101 | 2040000790 | S.LC | EXCCET103U | T | 36.5/2.8 |
| X151 | 6050011660 | S.XTL | CR-754 (30.000 MHz) | B | 40.5/2.9 |
| L1 | 6200003950 | S.COL | HF50ACC 322513-T | B | 43.2/34.8 |
| L2 | 6180003501 | S.COL | SLF6028T-100M1R3-PF | B | 13.6/35.7 |
| L3 | 6200003640 | S.COL | MLF1608E 100K-T | B | 12.2/8.2 |
| L401 | 6200003950 | S.COL | HF50ACC 322513-T | T | 49.3/42.9 |
| L921 | 6200003950 | S.COL | HF50ACC 322513-T | T | 73.7/4.4 |
| L922 | 6200003950 | S.COL | HF50ACC 322513-T | T | 77.9/9.5 |
| L924 | 6200003950 | S.COL | HF50ACC 322513-T | T | 74.1/9.5 |
| L925 | 6200003950 | S.COL | HF50ACC 322513-T | T | 77.5/4.4 |
| L961 | 6200003950 | S.COL | HF50ACC 322513-T | B | 11.3/12.2 |
| L962 | 6200003950 | S.COL | HF50ACC 322513-T | B | 12.8/24.6 |
| R1 | 7030003560 | S.RES | ERJ3GEYJ 103 V (10 k) | B | 42.5/22.3 |
| R2 | 7030003560 | S.RES | ERJ3GEYJ 103 V (10 k) | B | 41.8/24.2 |
| R3 | 7030003560 | S.RES | ERJ3GEYJ 103 V (10 k) | B | 42.5/21 |
| R4 | 7030003560 | S.RES | ERJ3GEYJ 103 V (10 k) | B | 41.8/13.7 |
| R5 | 7030003440 | S.RES | ERJ3GEYJ 102 V (1 k) | B | 23.2/6 |
| R6 | 7030003440 | S.RES | ERJ3GEYJ 102 V (1 k) | B | 21.9/6 |
| R7 | 7030003640 | S.RES | ERJ3GEYJ 473 V (47 k) | B | 20/6.7 |
| R8 | 7030003440 | S.RES | ERJ3GEYJ 102 V (1 k) | B | 14.1/8.2 |
| R9 | 7030003640 | S.RES | ERJ3GEYJ 473 V (47 k) | B | 14.5/11.6 |
| R10 | 7030003640 | S.RES | ERJ3GEYJ 473 V (47 k) | T | 43.8/13.1 |
| R11 | 7030003460 | S.RES | ERJ3GEYJ 152 V (1.5 k) | B | 48.2/9.7 |
| R12 | 7030003560 | S.RES | ERJ3GEYJ 103 V (10 k) | B | 26.8/13.3 |
| R151 | 7030003320 | S.RES | ERJ3GEYJ 101 V (100) | T | 44.3/5.3 |
| R152 | 7030003800 | S.RES | ERJ3GEYJ 105 V (1 M) | B | 43.5/6.2 |
| R171 | 7030003320 | S.RES | ERJ3GEYJ 101 V (100) | T | 41.3/1.4 |
| R181 | 7030003560 | S.RES | ERJ3GEYJ 103 V (10 k) | T | 9.1/7 |
| R182 | 7030003560 | S.RES | ERJ3GEYJ 103 V (10 k) | T | 6.3/7 |
| R183 | 7030003560 | S.RES | ERJ3GEYJ 103 V (10 k) | T | 11.9/8.3 |
| R184 | 7030003560 | S.RES | ERJ3GEYJ 103 V (10 k) | T | 11.9/7 |
| R201 | 7030003860 | S.RES | ERJ3GE JPW V | T | 30.8/39.2 |
| R301 | 7030003860 | S.RES | ERJ3GE JPW V | T | 79.5/38.4 |
| R302 | 7030009591 | S.RES | ERA3YED 472V (4.7 k) | T | 77.6/46.9 |
| R303 | 7030009591 | S.RES | ERA3YED 472V (4.7 k) | T | 75.7/46.1 |
| R304 | 7030003320 | S.RES | ERJ3GEYJ 101 V (100) | T | 78.1/40.7 |
| R305 | 7030003860 | S.RES | ERJ3GE JPW V | T | 75.7/43.5 |
| R306 | 7030003320 | S.RES | ERJ3GEYJ 101 V (100) | T | 68.9/46.1 |
| R331 | 7030003500 | S.RES | ERJ3GEYJ 332 V (3.3 k) | T | 64.4/39.9 |
| R332 | 7030003480 | S.RES | ERJ3GEYJ 222 V (2.2 k) | T | 65.7/39.9 |
| R333 | 7030003640 | S.RES | ERJ3GEYJ 473 V (47 k) | T | 75/33.2 |
| R341 | 7030003320 | S.RES | ERJ3GEYJ 101 V (100) | T | 73.7/34.8 |
| R342 | 7030003320 | S.RES | ERJ3GEYJ 101 V (100) | T | 66.9/37.3 |
| R343 | 7030006601 | S.RES | ERA3YED 272V (2.7 k) | T | 73.7/37.4 |
| R344 | 7030010390 | S.RES | ERA3YED 821V (820) | T | 65.6/33.6 |
| R345 | 7030009691 | S.RES | ERA3YED 101V (100) | T | 66.2/31.7 |
| R371 | 7030003320 | S.RES | ERJ3GEYJ 101 V (100) | T | 63.4/43.8 |
| R372 | 7030003320 | S.RES | ERJ3GEYJ 101 V (100) | T | 55.3/46.3 |
| R373 | 7030006601 | S.RES | ERA3YED 272V (2.7 k) | T | 63.4/45.6 |
| R374 | 7030010390 | S.RES | ERA3YED 821V (820) | T | 54.7/41.8 |
| R375 | 7030009691 | S.RES | ERA3YED 101V (100) | T | 56/40.5 |
| R401 | 7030009591 | S.RES | ERA3YED 472V (4.7 k) | T | 53.1/42.5 |
| R402 | 7030009591 | S.RES | ERA3YED 472V (4.7 k) | T | 51.8/44 |
| R403 | 7030003640 | S.RES | ERJ3GEYJ 473 V (47 k) | T | 54.1/38.7 |
| R404 | 7030003200 | S.RES | ERJ3GEYJ 100 V (10) | T | 50/40 |
| R405 | 7030003320 | S.RES | ERJ3GEYJ 101 V (100) | T | 51.1/38.1 |
| R406 | 7030003640 | S.RES | ERJ3GEYJ 473 V (47 k) | T | 49.8/38.1 |
| R407 | 7030003460 | S.RES | ERJ3GEYJ 152 V (1.5 k) | B | 46.8/36 |
| R409 | 7030003640 | S.RES | ERJ3GEYJ 473 V (47 k) | T | 52.3/23.8 |
| R410 | 7030003640 | S.RES | ERJ3GEYJ 473 V (47 k) | T | 47.2/23.8 |
| R411 | 7030003640 | S.RES | ERJ3GEYJ 473 V (47 k) | T | 49.8/23.8 |
| R412 | 7030003520 | S.RES | ERJ3GEYJ 472 V (4.7 k) | T | 56/22.3 |
| R413 | 7030003520 | S.RES | ERJ3GEYJ 472 V (4.7 k) | T | 54.1/21.9 |
| R451 | 7030003800 | S.RES | ERJ3GEYJ 105 V (1 M) | T | 42.6/36.6 |
| R501 | 7030006521 | S.RES | ERA3YED 561V (560) | T | 76.1/29.9 |
| R502 | 7030003360 | S.RES | ERJ3GEYJ 221 V (220) | T | 70.3/23.4 |
| R503 | 7030003380 | S.RES | ERJ3GEYJ 331 V (330) | T | 65.3/28.9 |
| R504 | 7030003680 | S.RES | ERJ3GEYJ 104 V (100 k) | T | 65.3/27.6 |
| R551 | 7030003320 | S.RES | ERJ3GEYJ 101 V (100) | T | 49.5/8.6 |
| R559 | 7030003640 | S.RES | ERJ3GEYJ 473 V (47 k) | T | 59.8/10.5 |
| R601 | 7030006521 | S.RES | ERA3YED 561V (560) | T | 63.1/20.7 |
| R602 | 7030007661 | S.RES | ERA3YED 331V (330) | T | 64/22 |
| R603 | 7030007661 | S.RES | ERA3YED 331V (330) | T | 59/19.8 |
| R604 | 7030009961 | S.RES | ERA3YED 221V (220) | T | 68.7/21 |
| R605 | 7030007661 | S.RES | ERA3YED 331V (330) | T | 65.7/20.7 |
| R606 | 7030003320 | S.RES | ERJ3GEYJ 101 V (100) | T | 67.1/13.9 |

## [DSP-A BOARD]

| REF NO. | ORDER NO. | DESCRIPTION | | M. | H/V LOCATION |
|---|---|---|---|---|---|
| R607 | 7030003320 | S.RES | ERJ3GEYJ 101 V (100) | T | 61.9/13.9 |
| R651 | 7030006521 | S.RES | ERA3YED 561V (560) | T | 64.3/10.6 |
| R652 | 7030007661 | S.RES | ERA3YED 331V (330) | T | 65.3/11.9 |
| R653 | 7030007661 | S.RES | ERA3YED 331V (330) | T | 62.1/10.1 |
| R654 | 7030009961 | S.RES | ERA3YED 221V (220) | T | 69.5/10.6 |
| R655 | 7030007661 | S.RES | ERA3YED 331V (330) | T | 66.9/10.6 |
| R658 | 7030003320 | S.RES | ERJ3GEYJ 101 V (100) | T | 67.7/3.8 |
| R659 | 7030003320 | S.RES | ERJ3GEYJ 101 V (100) | T | 64/3.8 |
| R701 | 7030010770 | S.RES | ERA3YED 681V (680) | T | 71.3/21 |
| R702 | 7030009861 | S.RES | ERA3YED 471V (470) | T | 74.8/22.7 |
| R703 | 7030010770 | S.RES | ERA3YED 681V (680) | T | 70.5/13.5 |
| R704 | 7030009861 | S.RES | ERA3YED 471V (470) | T | 77.2/13.3 |
| R705 | 7030009691 | S.RES | ERA3YED 101V (100) | T | 77.4/22.2 |
| R706 | 7030003320 | S.RES | ERJ3GEYJ 101 V (100) | T | 77.3/20.9 |
| R707 | 7030003320 | S.RES | ERJ3GEYJ 101 V (100) | T | 74.1/14.1 |
| R801 | 7030003650 | S.RES | ERJ3GEYJ 563 V (56 k) | T | 78/27.2 |
| R802 | 7030003680 | S.RES | ERJ3GEYJ 104 V (100 k) | T | 78/25.9 |
| R803 | 7030003480 | S.RES | ERJ3GEYJ 222 V (2.2 k) | T | 78.7/24 |
| R804 | 7030003490 | S.RES | ERJ3GEYJ 272 V (2.7 k) | T | 78/29.8 |
| R805 | 7030003340 | S.RES | ERJ3GEYJ 151 V (150) | T | 78/28.5 |
| R901 | 7030003860 | S.RES | ERJ3GE JPW V | T | 46.6/21 |
| R962 | 7030003320 | S.RES | ERJ3GEYJ 101 V (100) | T | 12.1/16.8 |
| R963 | 7030003320 | S.RES | ERJ3GEYJ 101 V (100) | T | 11.9/15.5 |
| R964 | 7030003320 | S.RES | ERJ3GEYJ 101 V (100) | T | 11.9/14.2 |
| R965 | 7030003320 | S.RES | ERJ3GEYJ 101 V (100) | T | 11.9/12.9 |
| R967 | 7030003320 | S.RES | ERJ3GEYJ 101 V (100) | T | 13.6/37.8 |
| R968 | 7030003320 | S.RES | ERJ3GEYJ 101 V (100) | T | 11.9/11.6 |
| R969 | 7030003320 | S.RES | ERJ3GEYJ 101 V (100) | T | 13.6/48.2 |
| R970 | 7030003320 | S.RES | ERJ3GEYJ 101 V (100) | T | 13.6/46.9 |
| R971 | 7030003320 | S.RES | ERJ3GEYJ 101 V (100) | T | 13.6/45.6 |
| R972 | 7030003320 | S.RES | ERJ3GEYJ 101 V (100) | T | 13.6/44.3 |
| R973 | 7030003320 | S.RES | ERJ3GEYJ 101 V (100) | T | 13.6/43 |
| R974 | 7030003320 | S.RES | ERJ3GEYJ 101 V (100) | T | 13.6/41.7 |
| R975 | 7030003320 | S.RES | ERJ3GEYJ 101 V (100) | T | 13.6/40.4 |
| R976 | 7030003320 | S.RES | ERJ3GEYJ 101 V (100) | T | 13.6/39.1 |
| C1 | 4030011600 | S.CER | C1608 JB 1E 104K-T | B | 15.2/30.5 |
| C2 | 4030011600 | S.CER | C1608 JB 1E 104K-T | B | 41.8/30.7 |
| C3 | 4030011600 | S.CER | C1608 JB 1E 104K-T | B | 18/32.9 |
| C4 | 4030011600 | S.CER | C1608 JB 1E 104K-T | B | 39.4/32.9 |
| C5 | 4030011600 | S.CER | C1608 JB 1E 104K-T | B | 23/26.3 |
| C6 | 4030011600 | S.CER | C1608 JB 1E 104K-T | B | 24.3/26.3 |
| C7 | 4030011600 | S.CER | C1608 JB 1E 104K-T | B | 28.6/26.3 |
| C8 | 4030011600 | S.CER | C1608 JB 1E 104K-T | B | 29.9/26.3 |
| C9 | 4030011600 | S.CER | C1608 JB 1E 104K-T | B | 33.8/26.3 |
| C10 | 4030011600 | S.CER | C1608 JB 1E 104K-T | B | 21.5/23.3 |
| C11 | 4030011600 | S.CER | C1608 JB 1E 104K-T | B | 36/23.7 |
| C12 | 4030011600 | S.CER | C1608 JB 1E 104K-T | T | 13.7/21 |
| C13 | 4030011600 | S.CER | C1608 JB 1E 104K-T | B | 22.2/20.2 |
| C14 | 4030011600 | S.CER | C1608 JB 1E 104K-T | B | 36/21.1 |
| C15 | 4030011600 | S.CER | C1608 JB 1E 104K-T | B | 22.2/18.9 |
| C16 | 4030011600 | S.CER | C1608 JB 1E 104K-T | B | 36/18.5 |
| C17 | 4030011600 | S.CER | C1608 JB 1E 104K-T | T | 43.5/20 |
| C18 | 4030011600 | S.CER | C1608 JB 1E 104K-T | B | 22.2/15.2 |
| C19 | 4030011600 | S.CER | C1608 JB 1E 104K-T | B | 34.7/14.4 |
| C20 | 4030011600 | S.CER | C1608 JB 1E 104K-T | B | 23.1/13.3 |
| C21 | 4030011600 | S.CER | C1608 JB 1E 104K-T | B | 24.4/13.3 |
| C22 | 4030011600 | S.CER | C1608 JB 1E 104K-T | B | 28.1/13.3 |
| C23 | 4030011600 | S.CER | C1608 JB 1E 104K-T | B | 32.6/12.6 |
| C24 | 4030011600 | S.CER | C1608 JB 1E 104K-T | B | 35.2/12.6 |
| C25 | 4030011600 | S.CER | C1608 JB 1E 104K-T | B | 17.3/6.7 |
| C26 | 4030011600 | S.CER | C1608 JB 1E 104K-T | B | 33.1/6.8 |
| C27 | 4030011600 | S.CER | C1608 JB 1E 104K-T | B | 41.8/11.1 |
| C28 | 4030011600 | S.CER | C1608 JB 1E 104K-T | B | 15.4/8.2 |
| C29 | 4030011600 | S.CER | C1608 JB 1E 104K-T | B | 40.9/6.8 |
| C30 | 4030011600 | S.CER | C1608 JB 1E 104K-T | T | 35.2/5 |
| C31 | 4030011600 | S.CER | C1608 JB 1E 104K-T | T | 28.5/5.2 |
| C32 | 4030011600 | S.CER | C1608 JB 1E 104K-T | T | 37.8/5 |
| C33 | 4030011600 | S.CER | C1608 JB 1E 104K-T | T | 18.5/35.2 |
| C34 | 4030011600 | S.CER | C1608 JB 1E 104K-T | T | 36.4/35 |
| C35 | 4030011600 | S.CER | C1608 JB 1E 104K-T | B | 26/32.9 |
| C36 | 4030011600 | S.CER | C1608 JB 1E 104K-T | B | 29.3/32.9 |
| C37 | 4030011600 | S.CER | C1608 JB 1E 104K-T | B | 36.8/32.9 |
| C38 | 4030011600 | S.CER | C1608 JB 1E 104K-T | B | 15.2/27.9 |
| C39 | 4030011600 | S.CER | C1608 JB 1E 104K-T | B | 22.4/32.9 |
| C40 | 4030011600 | S.CER | C1608 JB 1E 104K-T | B | 26/26.3 |
| C41 | 4030011600 | S.CER | C1608 JB 1E 104K-T | B | 21.7/26.3 |
| C42 | 4030011600 | S.CER | C1608 JB 1E 104K-T | B | 27.3/26.3 |
| C43 | 4030011600 | S.CER | C1608 JB 1E 104K-T | B | 32.5/26.3 |
| C44 | 4030011600 | S.CER | C1608 JB 1E 104K-T | B | 35.1/26.3 |
| C45 | 4030011600 | S.CER | C1608 JB 1E 104K-T | B | 41.8/26.8 |
| C46 | 4030011600 | S.CER | C1608 JB 1E 104K-T | B | 15.3/24.9 |
| C47 | 4030011600 | S.CER | C1608 JB 1E 104K-T | T | 43.5/29 |
| C48 | 4030011600 | S.CER | C1608 JB 1E 104K-T | B | 22.2/21.5 |
| C49 | 4030011600 | S.CER | C1608 JB 1E 104K-T | B | 41.8/17.9 |
| C50 | 4030011600 | S.CER | C1608 JB 1E 104K-T | B | 22.2/17.6 |
| C51 | 4030011600 | S.CER | C1608 JB 1E 104K-T | B | 36/15.9 |
| C52 | 4030011600 | S.CER | C1608 JB 1E 104K-T | B | 15.8/11.6 |
| C53 | 4030011600 | S.CER | C1608 JB 1E 104K-T | B | 21.8/13.3 |
| C54 | 4030011600 | S.CER | C1608 JB 1E 104K-T | T | 42.9/9.9 |
| C55 | 4030011600 | S.CER | C1608 JB 1E 104K-T | B | 29.4/13.3 |
| C56 | 4030011600 | S.CER | C1608 JB 1E 104K-T | B | 25/6.7 |
| C57 | 4030011600 | S.CER | C1608 JB 1E 104K-T | B | 29.8/6.8 |
| C58 | 4030011600 | S.CER | C1608 JB 1E 104K-T | B | 38.3/6.8 |
| C59 | 4030011600 | S.CER | C1608 JB 1E 104K-T | T | 20.3/5.3 |
| C60 | 4510007130 | S.ELE | EEFCD 0J 470R | T | 19.6/44 |
| C61 | 4550007480 | S.TAN | F930J106MAABMA | B | 44.8/29.7 |
| C62 | 4510007130 | S.ELE | EEFCD 0J 470R | T | 25.7/43.9 |
| C101 | 4030011600 | S.CER | C1608 JB 1E 104K-T | B | 35.7/6.8 |
| C151 | 4030011600 | S.CER | C1608 JB 1E 104K-T | B | 45.6/10 |
| C152 | 4030007030 | S.CER | C1608 CH 1H 150J-T | B | 46.1/6.2 |
| C153 | 4030007030 | S.CER | C1608 CH 1H 150J-T | B | 43.1/8 |
| C171 | 4030011600 | S.CER | C1608 JB 1E 104K-T | T | 41.3/2.7 |
| C181 | 4030011600 | S.CER | C1608 JB 1E 104K-T | T | 31/4.3 |

M.=Mounted side (T: Mounted on the Top side, B: Mounted on the Bottom side)
S.=Surface mount

## [DSP-A BOARD]

| REF NO. | ORDER NO. | DESCRIPTION | | M. | H/V LOCATION |
|---|---|---|---|---|---|
| C191 | 4030011600 | S.CER | C1608 JB 1E 104K-T | T | 22.6/1.2 |
| C201 | 4030011600 | S.CER | C1608 JB 1E 104K-T | B | 41.4/43.3 |
| C301 | 4340000250 | S.MLR | ECHU 1C 104JX5 | T | 77.9/44 |
| C302 | 4550007500 | S.TAN | F931D106MBABMA | B | 76.5/43.7 |
| C303 | 4030011600 | S.CER | C1608 JB 1E 104K-T | T | 75.6/40.9 |
| C304 | 4550007500 | S.TAN | F931D106MBABMA | B | 71.7/43.7 |
| C305 | 4030011600 | S.CER | C1608 JB 1E 104K-T | T | 67.6/46.1 |
| C306 | 4030007050 | S.CER | C1608 CH 1H 220J-T | T | 72.4/40.1 |
| C331 | 4030011600 | S.CER | C1608 JB 1E 104K-T | T | 78.8/32.8 |
| C332 | 4550007520 | S.TAN | F931A106MAABMA | B | 67.9/35.2 |
| C333 | 4030011600 | S.CER | C1608 JB 1E 104K-T | T | 79.5/35.8 |
| C341 | 4550007500 | S.TAN | F931D106MBABMA | B | 73.1/32.4 |
| C342 | 4030011600 | S.CER | C1608 JB 1E 104K-T | T | 73.7/31.6 |
| C343 | 4550007500 | S.TAN | F931D106MBABMA | B | 73.2/38.1 |
| C344 | 4030011600 | S.CER | C1608 JB 1E 104K-T | T | 65.6/37.3 |
| C345 | 4340000250 | S.MLR | ECHU 1C 104JX5 | T | 76.7/38.1 |
| C346 | 4030018580 | S.CER | C1608 CH 1H 821J-T | T | 66.9/33.6 |
| C347 | 4030011600 | S.CER | C1608 JB 1E 104K-T | T | 66.1/35.5 |
| C348 | 4030007050 | S.CER | C1608 CH 1H 220J-T | T | 70.9/30.9 |
| C371 | 4550007500 | S.TAN | F931D106MBABMA | B | 59.8/43.8 |
| C372 | 4030011600 | S.CER | C1608 JB 1E 104K-T | T | 63.4/42.5 |
| C373 | 4550007500 | S.TAN | F931D106MBABMA | B | 50.1/43.9 |
| C374 | 4030011600 | S.CER | C1608 JB 1E 104K-T | T | 53.4/45.5 |
| C375 | 4340000250 | S.MLR | ECHU 1C 104JX5 | T | 68.1/42.6 |
| C376 | 4030018580 | S.CER | C1608 CH 1H 821J-T | T | 56/43.1 |
| C377 | 4030011600 | S.CER | C1608 JB 1E 104K-T | T | 55.3/45 |
| C378 | 4030007050 | S.CER | C1608 CH 1H 220J-T | T | 59.4/39.5 |
| C401 | 4550007520 | S.TAN | F931A106MAABMA | B | 54.9/43.8 |
| C402 | 4030017840 | S.CER | C2012 CH 1H 222J-T | T | 58.1/37.6 |
| C403 | 4550007480 | S.TAN | F930J106MAABMA | B | 63.1/35.2 |
| C404 | 4030011810 | S.CER | C1608 JB 1A 224K-T | T | 61.5/37.4 |
| C405 | 4550007480 | S.TAN | F930J106MAABMA | B | 58.3/35.2 |
| C406 | 4030011810 | S.CER | C1608 JB 1A 224K-T | T | 63.5/36.7 |
| C407 | 4550007480 | S.TAN | F930J106MAABMA | B | 50.4/36.1 |
| C408 | 4030011600 | S.CER | C1608 JB 1E 104K-T | T | 54.1/37.4 |
| C409 | 4030011600 | S.CER | C1608 JB 1E 104K-T | T | 54.1/23.2 |
| C410 | 4030009000 | S.CER | C2012 JB 1C 224K-T | T | 62.1/24.2 |
| C411 | 4550007480 | S.TAN | F930J106MAABMA | B | 63.1/28.4 |
| C412 | 4550007480 | S.TAN | F930J106MAABMA | B | 58.3/29.1 |
| C413 | 4030009000 | S.CER | C2012 JB 1C 224K-T | T | 59/22.5 |
| C414 | 4030011600 | S.CER | C1608 JB 1E 104K-T | T | 54.1/24.5 |
| C415 | 4550007520 | S.TAN | F931A106MAABMA | B | 53/26.5 |
| C416 | 4550007520 | S.TAN | F931A106MAABMA | B | 53/31.3 |
| C417 | 4030017840 | S.CER | C2012 CH 1H 222J-T | T | 58/24.2 |
| C450 | 4030011600 | S.CER | C1608 JB 1E 104K-T | T | 43.1/35.3 |
| C451 | 4030011600 | S.CER | C1608 JB 1E 104K-T | T | 43.6/42.9 |
| C452 | 4030006860 | S.CER | C1608 JB 1H 102K-T | T | 40.8/39.6 |
| C501 | 4030011600 | S.CER | C1608 JB 1E 104K-T | T | 74.8/24 |
| C502 | 4550007500 | S.TAN | F931D106MBABMA | B | 77.5/33.1 |
| C503 | 4030011600 | S.CER | C1608 JB 1E 104K-T | T | 71.6/23.4 |
| C504 | 4550007500 | S.TAN | F931D106MBABMA | B | 67.9/29.1 |
| C506 | 4030007090 | S.CER | C1608 CH 1H 470J-T | T | 67.1/28.4 |
| C507 | 4030007090 | S.CER | C1608 CH 1H 470J-T | T | 76.1/27.3 |
| C551 | 4550007520 | S.TAN | F931A106MAABMA | B | 50.3/8.7 |
| C552 | 4030011600 | S.CER | C1608 JB 1E 104K-T | T | 49.5/5.5 |
| C553 | 4550007520 | S.TAN | F931A106MAABMA | B | 55/13.3 |
| C554 | 4030011600 | S.CER | C1608 JB 1E 104K-T | T | 60/7.6 |
| C555 | 4030011600 | S.CER | C1608 JB 1E 104K-T | T | 59.8/4.6 |
| C556 | 4550007480 | S.TAN | F930J106MAABMA | B | 53.6/7.1 |
| C557 | 4030011600 | S.CER | C1608 JB 1E 104K-T | T | 60.7/2.8 |
| C558 | 4550007520 | S.TAN | F931A106MAABMA | B | 53.6/4.3 |
| C601 | 4550007480 | S.TAN | F930J106MAABMA | B | 61.3/17.2 |
| C602 | 4030018510 | S.CER | C2012 CH 1H 682J-T | T | 58.8/16.5 |
| C603 | 4550007500 | S.TAN | F931D106MBABMA | B | 68.2/15 |
| C604 | 4030011600 | S.CER | C1608 JB 1E 104K-T | T | 58.2/14.2 |
| C605 | 4030011600 | S.CER | C1608 JB 1E 104K-T | T | 64.5/13.9 |
| C606 | 4550007500 | S.TAN | F931D106MBABMA | B | 69.2/19.2 |
| C607 | 4030018510 | S.CER | C2012 CH 1H 682J-T | T | 67/22.5 |
| C608 | 4030007050 | S.CER | C1608 CH 1H 220J-T | T | 68.3/16.7 |
| C651 | 4550007480 | S.TAN | F930J106MAABMA | B | 60.1/9.2 |
| C652 | 4030018510 | S.CER | C2012 CH 1H 682J-T | T | 61.9/6.6 |
| C653 | 4550007500 | S.TAN | F931D106MBABMA | B | 59.9/2.6 |
| C654 | 4030011600 | S.CER | C1608 JB 1E 104K-T | T | 64/2.5 |
| C655 | 4030011600 | S.CER | C1608 JB 1E 104K-T | T | 67.7/2.5 |
| C656 | 4550007500 | S.TAN | F931D106MBABMA | B | 59.9/6 |
| C657 | 4030018510 | S.CER | C2012 CH 1H 682J-T | T | 68.3/12.2 |
| C658 | 4030007050 | S.CER | C1608 CH 1H 220J-T | T | 71.4/6.9 |
| C701 | 4030017840 | S.CER | C2012 CH 1H 222J-T | T | 74.3/21.1 |
| C702 | 4030017840 | S.CER | C2012 CH 1H 222J-T | T | 78.9/13.4 |
| C703 | 4550007500 | S.TAN | F931D106MBABMA | B | 75.3/15.7 |
| C704 | 4030011600 | S.CER | C1608 JB 1E 104K-T | T | 75.9/12.8 |
| C705 | 4030011600 | S.CER | C1608 JB 1E 104K-T | T | 79.4/20.6 |
| C706 | 4550007500 | S.TAN | F931D106MBABMA | B | 75.6/21.1 |
| C707 | 4030007050 | S.CER | C1608 CH 1H 220J-T | T | 78.7/18 |
| C771 | 4550007480 | S.TAN | F930J106MAABMA | B | 49.8/14.1 |
| C772 | 4030011600 | S.CER | C1608 JB 1E 104K-T | T | 49.5/15 |
| C773 | 4550007480 | S.TAN | F930J106MAABMA | B | 55/18.1 |
| C801 | 4030011600 | S.CER | C1608 JB 1E 104K-T | T | 77.4/24 |
| C921 | 4550007510 | S.TAN | F931C106MBABMA | B | 66.5/2.6 |
| C922 | 4030011600 | S.CER | C1608 JB 1E 104K-T | T | 71/3.6 |
| C923 | 4550002830 | S.TAN | TEESVD2 1V 685M12R | B | 78.3/6.5 |
| C924 | 4030011600 | S.CER | C1608 JB 1E 104K-T | T | 80.1/8.6 |
| C925 | 4550007510 | S.TAN | F931C106MBABMA | B | 67.1/10.5 |
| C926 | 4030011600 | S.CER | C1608 JB 1E 104K-T | T | 71.8/12.7 |
| C927 | 4550002830 | S.TAN | TEESVD2 1V 685M12R | B | 72.6/6.5 |
| C928 | 4030011600 | S.CER | C1608 JB 1E 104K-T | T | 79.6/5.2 |
| C961 | 4030011600 | S.CER | C1608 JB 1E 104K-T | B | 11.2/15.7 |
| C962 | 4550007520 | S.TAN | F931A106MAABMA | B | 12/18.8 |
| C963 | 4030011600 | S.CER | C1608 JB 1E 104K-T | B | 10.7/25.4 |
| C964 | 4550007520 | S.TAN | F931A106MAABMA | B | 11.4/29.4 |
| J921 | 6910013900 | CNR | IMSA-9180S-22A | | |
| J961 | 6910012460 | CNR | IMSA-9180S-30A | | |

## [DSP-B BOARD]

| REF NO. | ORDER NO. | DESCRIPTION | | M. | H/V LOCATION |
|---|---|---|---|---|---|
| IC1 | 1140012211 | S.IC | TMS320C6713BZDP225 | T | 28.1/20.4 |
| IC151 | 1130008361 | S.IC | TC7SHU04FU (TE85L,JF) | B | 45.5/8.1 |
| IC171 | 1130008041 | S.IC | TC7SH04FU (TE85L,JF) | T | 41.3/4.6 |
| IC181 | 1130011150 | S.IC | SN74AHC2G08HDCTR | T | 30.2/1.9 |
| IC191 | 1130011150 | S.IC | SN74AHC2G08HDCTR | T | 24/3.5 |
| IC201 | 1130013492 | S.IC | AT29LV040A-15TU | B | 29/42 |
| IC203 | 1110006411 | S.IC | R3111N111A-TR-F | T | 30/36.5 |
| IC301 | 1110006100 | S.IC | NJM5534MD-TE1 | T | 72.3/44.7 |
| IC331 | 1130009981 | S.IC | TC7W53FK (TE85L,F) | T | 76.9/34.1 |
| IC341 | 1110006100 | S.IC | NJM5534MD-TE1 | T | 70.3/35.5 |
| IC371 | 1110006100 | S.IC | NJM5534MD-TE1 | T | 59.4/44.3 |
| IC401 | 1110006111 | S.IC | AK5394AVSP/P | T | 54.2/31 |
| IC451 | 1130006891 | S.IC | TC7S04FU (TE85R,F) | T | 43.5/41 |
| IC452 | 1130012160 | S.IC | SN74LVC1GU04DCKR | T | 42.8/38.5 |
| IC501 | 1110001901 | S.IC | uPC4570G2-E1-A | T | 71.6/27.4 |
| IC551 | 1130013090 | S.IC | AK4396VFP-E2/P | T | 54.6/7.3 |
| IC601 | 1110006100 | S.IC | NJM5534MD-TE1 | T | 63.6/17.3 |
| IC651 | 1110006100 | S.IC | NJM5534MD-TE1 | T | 66.8/7.2 |
| IC701 | 1110006100 | S.IC | NJM5534MD-TE1 | T | 74.1/17.5 |
| IC771 | 1110004770 | S.IC | BU9480F-E2 | T | 51.7/18.4 |
| Q1 | 1590000680 | S.TR | DTC114EUA T106 | T | 45.7/16.5 |
| D501 | 1730002320 | S.ZEN | MA8051-M (TX) | B | 76.5/29.5 |
| FI101 | 2040000790 | S.LC | EXCCET103U | T | 36.5/2.8 |
| X151 | 6050011660 | S.XTL | CR-754 (30.000 MHz) | B | 40.5/2.9 |
| L1 | 6200003950 | S.COL | HF50ACC 322513-T | B | 43.2/34.8 |
| L2 | 6180003501 | S.COL | SLF6028T-100M1R3-PF | B | 13.6/35.7 |
| L3 | 6200003640 | S.COL | MLF1608E 100K-T | B | 12.2/8.2 |
| L401 | 6200003950 | S.COL | HF50ACC 322513-T | T | 49.3/42.9 |
| L921 | 6200003950 | S.COL | HF50ACC 322513-T | T | 73.7/4.4 |
| L922 | 6200003950 | S.COL | HF50ACC 322513-T | T | 77.9/9.5 |
| L924 | 6200003950 | S.COL | HF50ACC 322513-T | T | 74.1/9.5 |
| L925 | 6200003950 | S.COL | HF50ACC 322513-T | T | 77.5/4.4 |
| L961 | 6200003950 | S.COL | HF50ACC 322513-T | B | 11.3/12.2 |
| L962 | 6200003950 | S.COL | HF50ACC 322513-T | B | 12.8/24.6 |
| R1 | 7030003560 | S.RES | ERJ3GEYJ 103 V (10 k) | B | 42.5/22.3 |
| R2 | 7030003560 | S.RES | ERJ3GEYJ 103 V (10 k) | B | 41.8/24.2 |
| R3 | 7030003560 | S.RES | ERJ3GEYJ 103 V (10 k) | B | 42.5/21 |
| R4 | 7030003560 | S.RES | ERJ3GEYJ 103 V (10 k) | B | 41.8/13.7 |
| R5 | 7030003440 | S.RES | ERJ3GEYJ 102 V (1 k) | B | 23.2/6 |
| R6 | 7030003440 | S.RES | ERJ3GEYJ 102 V (1 k) | B | 21.9/6 |
| R7 | 7030003640 | S.RES | ERJ3GEYJ 473 V (47 k) | B | 20/6.7 |
| R8 | 7030003440 | S.RES | ERJ3GEYJ 102 V (1 k) | B | 14.1/8.2 |
| R9 | 7030003640 | S.RES | ERJ3GEYJ 473 V (47 k) | B | 14.5/11.6 |
| R10 | 7030003640 | S.RES | ERJ3GEYJ 473 V (47 k) | T | 43.8/13.1 |
| R11 | 7030003460 | S.RES | ERJ3GEYJ 152 V (1.5 k) | B | 48.2/9.7 |
| R12 | 7030003560 | S.RES | ERJ3GEYJ 103 V (10 k) | B | 26.8/13.3 |
| R151 | 7030003320 | S.RES | ERJ3GEYJ 101 V (100) | T | 44.3/5.3 |
| R152 | 7030003800 | S.RES | ERJ3GEYJ 105 V (1 M) | B | 43.5/6.2 |
| R171 | 7030003320 | S.RES | ERJ3GEYJ 101 V (100) | T | 41.3/1.4 |
| R181 | 7030003560 | S.RES | ERJ3GEYJ 103 V (10 k) | T | 9.1/7 |
| R182 | 7030003560 | S.RES | ERJ3GEYJ 103 V (10 k) | T | 6.3/7 |
| R183 | 7030003560 | S.RES | ERJ3GEYJ 103 V (10 k) | T | 11.9/8.3 |
| R184 | 7030003560 | S.RES | ERJ3GEYJ 103 V (10 k) | T | 11.9/7 |
| R201 | 7030003860 | S.RES | ERJ3GE JPW V | T | 30.8/39.2 |
| R301 | 7030003860 | S.RES | ERJ3GE JPW V | T | 79.5/38.4 |
| R302 | 7030009591 | S.RES | ERA3YED 472V (4.7 k) | T | 77.6/46.9 |
| R303 | 7030009591 | S.RES | ERA3YED 472V (4.7 k) | T | 75.7/46.1 |
| R304 | 7030003320 | S.RES | ERJ3GEYJ 101 V (100) | T | 78.1/40.7 |
| R305 | 7030003860 | S.RES | ERJ3GE JPW V | T | 75.7/43.5 |
| R306 | 7030003320 | S.RES | ERJ3GEYJ 101 V (100) | T | 68.9/46.1 |
| R331 | 7030003500 | S.RES | ERJ3GEYJ 332 V (3.3 k) | T | 64.4/39.9 |
| R332 | 7030003480 | S.RES | ERJ3GEYJ 222 V (2.2 k) | T | 65.7/39.9 |
| R333 | 7030003640 | S.RES | ERJ3GEYJ 473 V (47 k) | T | 75/33.2 |
| R341 | 7030003320 | S.RES | ERJ3GEYJ 101 V (100) | T | 73.7/34.8 |
| R342 | 7030003320 | S.RES | ERJ3GEYJ 101 V (100) | T | 66.9/37.3 |
| R343 | 7030006601 | S.RES | ERA3YED 272V (2.7 k) | T | 73.7/37.4 |
| R344 | 7030010390 | S.RES | ERA3YED 821V (820) | T | 65.6/33.6 |
| R345 | 7030009691 | S.RES | ERA3YED 101V (100) | T | 66.2/31.7 |
| R371 | 7030003320 | S.RES | ERJ3GEYJ 101 V (100) | T | 63.4/43.8 |
| R372 | 7030003320 | S.RES | ERJ3GEYJ 101 V (100) | T | 55.3/46.3 |
| R373 | 7030006601 | S.RES | ERA3YED 272V (2.7 k) | T | 63.4/45.6 |
| R374 | 7030010390 | S.RES | ERA3YED 821V (820) | T | 54.7/41.8 |
| R375 | 7030009691 | S.RES | ERA3YED 101V (100) | T | 56/40.5 |
| R401 | 7030009591 | S.RES | ERA3YED 472V (4.7 k) | T | 53.1/42.5 |
| R402 | 7030009591 | S.RES | ERA3YED 472V (4.7 k) | T | 51.8/44 |
| R403 | 7030003640 | S.RES | ERJ3GEYJ 473 V (47 k) | T | 54.1/38.7 |
| R404 | 7030003200 | S.RES | ERJ3GEYJ 100 V (10) | T | 50/40 |
| R405 | 7030003320 | S.RES | ERJ3GEYJ 101 V (100) | T | 51.1/38.1 |
| R406 | 7030003640 | S.RES | ERJ3GEYJ 473 V (47 k) | T | 49.8/38.1 |
| R407 | 7030003460 | S.RES | ERJ3GEYJ 152 V (1.5 k) | B | 46.8/36 |
| R409 | 7030003640 | S.RES | ERJ3GEYJ 473 V (47 k) | T | 52.3/23.8 |
| R410 | 7030003640 | S.RES | ERJ3GEYJ 473 V (47 k) | T | 47.2/23.8 |
| R411 | 7030003640 | S.RES | ERJ3GEYJ 473 V (47 k) | T | 49.8/23.8 |
| R412 | 7030003520 | S.RES | ERJ3GEYJ 472 V (4.7 k) | T | 56/22.3 |
| R413 | 7030003520 | S.RES | ERJ3GEYJ 472 V (4.7 k) | T | 54.1/21.9 |
| R451 | 7030003800 | S.RES | ERJ3GEYJ 105 V (1 M) | T | 42.6/36.6 |
| R501 | 7030006521 | S.RES | ERA3YED 561V (560) | T | 76.1/29.9 |
| R502 | 7030003360 | S.RES | ERJ3GEYJ 221 V (220) | T | 70.3/23.4 |
| R503 | 7030003380 | S.RES | ERJ3GEYJ 331 V (330) | T | 65.3/28.9 |
| R504 | 7030003680 | S.RES | ERJ3GEYJ 104 V (100 k) | T | 65.3/27.6 |
| R551 | 7030003320 | S.RES | ERJ3GEYJ 101 V (100) | T | 49.5/8.6 |
| R559 | 7030003640 | S.RES | ERJ3GEYJ 473 V (47 k) | T | 59.8/10.5 |
| R601 | 7030006521 | S.RES | ERA3YED 561V (560) | T | 63.1/20.7 |
| R602 | 7030007661 | S.RES | ERA3YED 331V (330) | T | 64/22 |
| R603 | 7030007661 | S.RES | ERA3YED 331V (330) | T | 59/19.8 |
| R604 | 7030009961 | S.RES | ERA3YED 221V (220) | T | 68.7/21 |
| R605 | 7030007661 | S.RES | ERA3YED 331V (330) | T | 65.7/20.7 |
| R606 | 7030003320 | S.RES | ERJ3GEYJ 101 V (100) | T | 67.1/13.9 |

M.=Mounted side (T: Mounted on the Top side, B: Mounted on the Bottom side)
S.=Surface mount

## [DSP-B BOARD]

| REF NO. | ORDER NO. | DESCRIPTION | M. | H/V LOCATION |
|---|---|---|---|---|
| R607 | 7030003320 | S.RES ERJ3GEYJ 101 V (100) | T | 61.9/13.9 |
| R651 | 7030006521 | S.RES ERA3YED 561V (560) | T | 64.3/10.6 |
| R652 | 7030007661 | S.RES ERA3YED 331V (330) | T | 65.3/11.9 |
| R653 | 7030007661 | S.RES ERA3YED 331V (330) | T | 62.1/10.1 |
| R654 | 7030009961 | S.RES ERA3YED 221V (220) | T | 69.5/10.6 |
| R655 | 7030007661 | S.RES ERA3YED 331V (330) | T | 66.9/10.6 |
| R658 | 7030003320 | S.RES ERJ3GEYJ 101 V (100) | T | 67.7/3.8 |
| R659 | 7030003320 | S.RES ERJ3GEYJ 101 V (100) | T | 64/3.8 |
| R701 | 7030010770 | S.RES ERA3YED 681V (680) | T | 71.3/21 |
| R702 | 7030009861 | S.RES ERA3YED 471V (470) | T | 74.8/22.7 |
| R703 | 7030010770 | S.RES ERA3YED 681V (680) | T | 70.5/13.5 |
| R704 | 7030009861 | S.RES ERA3YED 471V (470) | T | 77.2/13.3 |
| R705 | 7030009691 | S.RES ERA3YED 101V (100) | T | 77.4/22.2 |
| R706 | 7030003320 | S.RES ERJ3GEYJ 101 V (100) | T | 77.3/20.9 |
| R707 | 7030003320 | S.RES ERJ3GEYJ 101 V (100) | T | 74.1/14.1 |
| R801 | 7030003650 | S.RES ERJ3GEYJ 563 V (56 k) | T | 78/27.2 |
| R802 | 7030003680 | S.RES ERJ3GEYJ 104 V (100 k) | T | 78/25.9 |
| R803 | 7030003480 | S.RES ERJ3GEYJ 222 V (2.2 k) | T | 78.7/24 |
| R804 | 7030003490 | S.RES ERJ3GEYJ 272 V (2.7 k) | T | 78/29.8 |
| R805 | 7030003340 | S.RES ERJ3GEYJ 151 V (150) | T | 78/28.5 |
| R901 | 7030003860 | S.RES ERJ3GE JPW V | T | 46.6/21 |
| R962 | 7030003320 | S.RES ERJ3GEYJ 101 V (100) | T | 12.1/16.8 |
| R963 | 7030003320 | S.RES ERJ3GEYJ 101 V (100) | T | 11.9/15.5 |
| R964 | 7030003320 | S.RES ERJ3GEYJ 101 V (100) | T | 11.9/14.2 |
| R965 | 7030003320 | S.RES ERJ3GEYJ 101 V (100) | T | 11.9/12.9 |
| R967 | 7030003320 | S.RES ERJ3GEYJ 101 V (100) | T | 13.6/37.8 |
| R968 | 7030003320 | S.RES ERJ3GEYJ 101 V (100) | T | 11.9/11.6 |
| R969 | 7030003320 | S.RES ERJ3GEYJ 101 V (100) | T | 13.6/48.2 |
| R970 | 7030003320 | S.RES ERJ3GEYJ 101 V (100) | T | 13.6/46.9 |
| R971 | 7030003320 | S.RES ERJ3GEYJ 101 V (100) | T | 13.6/45.6 |
| R972 | 7030003320 | S.RES ERJ3GEYJ 101 V (100) | T | 13.6/44.3 |
| R973 | 7030003320 | S.RES ERJ3GEYJ 101 V (100) | T | 13.6/43 |
| R974 | 7030003320 | S.RES ERJ3GEYJ 101 V (100) | T | 13.6/41.7 |
| R975 | 7030003320 | S.RES ERJ3GEYJ 101 V (100) | T | 13.6/40.4 |
| R976 | 7030003320 | S.RES ERJ3GEYJ 101 V (100) | T | 13.6/39.1 |
| | | | | |
| C1 | 4030011600 | S.CER C1608 JB 1E 104K-T | B | 15.2/30.5 |
| C2 | 4030011600 | S.CER C1608 JB 1E 104K-T | B | 41.8/30.7 |
| C3 | 4030011600 | S.CER C1608 JB 1E 104K-T | B | 18/32.9 |
| C4 | 4030011600 | S.CER C1608 JB 1E 104K-T | B | 39.4/32.9 |
| C5 | 4030011600 | S.CER C1608 JB 1E 104K-T | B | 23/26.3 |
| C6 | 4030011600 | S.CER C1608 JB 1E 104K-T | B | 24.3/26.3 |
| C7 | 4030011600 | S.CER C1608 JB 1E 104K-T | B | 28.6/26.3 |
| C8 | 4030011600 | S.CER C1608 JB 1E 104K-T | B | 29.9/26.3 |
| C9 | 4030011600 | S.CER C1608 JB 1E 104K-T | B | 33.8/26.3 |
| C10 | 4030011600 | S.CER C1608 JB 1E 104K-T | B | 21.5/23.3 |
| C11 | 4030011600 | S.CER C1608 JB 1E 104K-T | B | 36/23.7 |
| C12 | 4030011600 | S.CER C1608 JB 1E 104K-T | T | 13.7/21 |
| C13 | 4030011600 | S.CER C1608 JB 1E 104K-T | B | 22.2/20.2 |
| C14 | 4030011600 | S.CER C1608 JB 1E 104K-T | B | 36/21.1 |
| C15 | 4030011600 | S.CER C1608 JB 1E 104K-T | B | 22.2/18.9 |
| C16 | 4030011600 | S.CER C1608 JB 1E 104K-T | B | 36/18.5 |
| C17 | 4030011600 | S.CER C1608 JB 1E 104K-T | T | 43.5/20 |
| C18 | 4030011600 | S.CER C1608 JB 1E 104K-T | B | 22.2/15.2 |
| C19 | 4030011600 | S.CER C1608 JB 1E 104K-T | B | 34.7/14.4 |
| C20 | 4030011600 | S.CER C1608 JB 1E 104K-T | B | 23.1/13.3 |
| C21 | 4030011600 | S.CER C1608 JB 1E 104K-T | B | 24.4/13.3 |
| C22 | 4030011600 | S.CER C1608 JB 1E 104K-T | B | 28.1/13.3 |
| C23 | 4030011600 | S.CER C1608 JB 1E 104K-T | B | 32.6/12.6 |
| C24 | 4030011600 | S.CER C1608 JB 1E 104K-T | B | 35.2/12.6 |
| C25 | 4030011600 | S.CER C1608 JB 1E 104K-T | B | 17.3/6.7 |
| C26 | 4030011600 | S.CER C1608 JB 1E 104K-T | B | 33.1/6.8 |
| C27 | 4030011600 | S.CER C1608 JB 1E 104K-T | B | 41.8/11.1 |
| C28 | 4030011600 | S.CER C1608 JB 1E 104K-T | B | 15.4/8.2 |
| C29 | 4030011600 | S.CER C1608 JB 1E 104K-T | B | 40.9/6.8 |
| C30 | 4030011600 | S.CER C1608 JB 1E 104K-T | T | 35.2/5 |
| C31 | 4030011600 | S.CER C1608 JB 1E 104K-T | T | 28.5/5.2 |
| C32 | 4030011600 | S.CER C1608 JB 1E 104K-T | T | 37.8/5 |
| C33 | 4030011600 | S.CER C1608 JB 1E 104K-T | T | 18.5/35.2 |
| C34 | 4030011600 | S.CER C1608 JB 1E 104K-T | T | 36.4/35 |
| C35 | 4030011600 | S.CER C1608 JB 1E 104K-T | B | 26/32.9 |
| C36 | 4030011600 | S.CER C1608 JB 1E 104K-T | B | 29.3/32.9 |
| C37 | 4030011600 | S.CER C1608 JB 1E 104K-T | B | 36.8/32.9 |
| C38 | 4030011600 | S.CER C1608 JB 1E 104K-T | B | 15.2/27.9 |
| C39 | 4030011600 | S.CER C1608 JB 1E 104K-T | B | 22.4/32.9 |
| C40 | 4030011600 | S.CER C1608 JB 1E 104K-T | B | 26/26.3 |
| C41 | 4030011600 | S.CER C1608 JB 1E 104K-T | B | 21.7/26.3 |
| C42 | 4030011600 | S.CER C1608 JB 1E 104K-T | B | 27.3/26.3 |
| C43 | 4030011600 | S.CER C1608 JB 1E 104K-T | B | 32.5/26.3 |
| C44 | 4030011600 | S.CER C1608 JB 1E 104K-T | B | 35.1/26.3 |
| C45 | 4030011600 | S.CER C1608 JB 1E 104K-T | B | 41.8/26.8 |
| C46 | 4030011600 | S.CER C1608 JB 1E 104K-T | B | 15.3/24.9 |
| C47 | 4030011600 | S.CER C1608 JB 1E 104K-T | T | 43.5/29 |
| C48 | 4030011600 | S.CER C1608 JB 1E 104K-T | B | 22.2/21.5 |
| C49 | 4030011600 | S.CER C1608 JB 1E 104K-T | B | 41.8/17.9 |
| C50 | 4030011600 | S.CER C1608 JB 1E 104K-T | B | 22.2/17.6 |
| C51 | 4030011600 | S.CER C1608 JB 1E 104K-T | B | 36/15.9 |
| C52 | 4030011600 | S.CER C1608 JB 1E 104K-T | B | 15.8/11.6 |
| C53 | 4030011600 | S.CER C1608 JB 1E 104K-T | B | 21.8/13.3 |
| C54 | 4030011600 | S.CER C1608 JB 1E 104K-T | T | 42.9/9.9 |
| C55 | 4030011600 | S.CER C1608 JB 1E 104K-T | B | 29.4/13.3 |
| C56 | 4030011600 | S.CER C1608 JB 1E 104K-T | B | 25/6.7 |
| C57 | 4030011600 | S.CER C1608 JB 1E 104K-T | B | 29.8/6.8 |
| C58 | 4030011600 | S.CER C1608 JB 1E 104K-T | B | 38.3/6.8 |
| C59 | 4030011600 | S.CER C1608 JB 1E 104K-T | T | 20.3/5.3 |
| C60 | 4510007130 | S.ELE EEFCD 0J 470R | T | 19.6/44 |
| C61 | 4550007480 | S.TAN F930J106MAABMA | B | 44.8/29.7 |
| C62 | 4510007130 | S.ELE EEFCD 0J 470R | T | 25.7/43.9 |
| C101 | 4030011600 | S.CER C1608 JB 1E 104K-T | B | 35.7/6.8 |
| C102 | 4550007480 | S.TAN F930J106MAABMA | B | 30.6/2.6 |
| C151 | 4030011600 | S.CER C1608 JB 1E 104K-T | B | 45.6/10 |
| C152 | 4030007030 | S.CER C1608 CH 1H 150J-T | B | 46.1/6.2 |
| C153 | 4030007030 | S.CER C1608 CH 1H 150J-T | B | 43.1/8 |
| C171 | 4030011600 | S.CER C1608 JB 1E 104K-T | T | 41.3/2.7 |

## [DSP-B BOARD]

| REF NO. | ORDER NO. | DESCRIPTION | M. | H/V LOCATION |
|---|---|---|---|---|
| C181 | 4030011600 | S.CER C1608 JB 1E 104K-T | T | 31/4.3 |
| C191 | 4030011600 | S.CER C1608 JB 1E 104K-T | T | 22.6/1.2 |
| C201 | 4030011600 | S.CER C1608 JB 1E 104K-T | B | 41.4/43.3 |
| C301 | 4340000250 | S.MLR ECHU 1C 104JX5 | T | 77.9/44 |
| C302 | 4550007500 | S.TAN F931D106MBABMA | B | 76.5/43.7 |
| C303 | 4030011600 | S.CER C1608 JB 1E 104K-T | T | 75.6/40.9 |
| C304 | 4550007500 | S.TAN F931D106MBABMA | B | 71.7/43.7 |
| C305 | 4030011600 | S.CER C1608 JB 1E 104K-T | T | 67.6/46.1 |
| C306 | 4030007050 | S.CER C1608 CH 1H 220J-T | T | 72.4/40.1 |
| C331 | 4030011600 | S.CER C1608 JB 1E 104K-T | T | 78.8/32.8 |
| C332 | 4550007520 | S.TAN F931A106MAABMA | B | 67.9/35.2 |
| C333 | 4030011600 | S.CER C1608 JB 1E 104K-T | T | 79.5/35.8 |
| C341 | 4550007500 | S.TAN F931D106MBABMA | B | 73.1/32.4 |
| C342 | 4030011600 | S.CER C1608 JB 1E 104K-T | T | 73.7/31.6 |
| C343 | 4550007500 | S.TAN F931D106MBABMA | B | 73.2/38.1 |
| C344 | 4030011600 | S.CER C1608 JB 1E 104K-T | T | 65.6/37.3 |
| C345 | 4340000250 | S.MLR ECHU 1C 104JX5 | T | 76.7/38.1 |
| C346 | 4030018580 | S.CER C1608 CH 1H 821J-T | T | 66.9/33.6 |
| C347 | 4030011600 | S.CER C1608 JB 1E 104K-T | T | 66.1/35.5 |
| C348 | 4030007050 | S.CER C1608 CH 1H 220J-T | T | 70.9/30.9 |
| C371 | 4550007500 | S.TAN F931D106MBABMA | B | 59.8/43.8 |
| C372 | 4030011600 | S.CER C1608 JB 1E 104K-T | T | 63.4/42.5 |
| C373 | 4550007500 | S.TAN F931D106MBABMA | B | 50.1/43.9 |
| C374 | 4030011600 | S.CER C1608 JB 1E 104K-T | T | 53.4/45.5 |
| C375 | 4340000250 | S.MLR ECHU 1C 104JX5 | T | 68.1/42.6 |
| C376 | 4030018580 | S.CER C1608 CH 1H 821J-T | T | 56/43.1 |
| C377 | 4030011600 | S.CER C1608 JB 1E 104K-T | T | 55.3/45 |
| C378 | 4030007050 | S.CER C1608 CH 1H 220J-T | T | 59.4/39.5 |
| C401 | 4550007520 | S.TAN F931A106MAABMA | B | 54.9/43.8 |
| C402 | 4030017840 | S.CER C2012 CH 1H 222J-T | T | 58.1/37.6 |
| C403 | 4550007480 | S.TAN F930J106MAABMA | B | 63.1/35.2 |
| C404 | 4030011810 | S.CER C1608 JB 1A 224K-T | T | 61.5/37.4 |
| C405 | 4550007480 | S.TAN F930J106MAABMA | B | 58.3/35.2 |
| C406 | 4030011810 | S.CER C1608 JB 1A 224K-T | T | 63.5/36.7 |
| C407 | 4550007480 | S.TAN F930J106MAABMA | B | 50.4/36.1 |
| C408 | 4030011600 | S.CER C1608 JB 1E 104K-T | T | 54.1/37.4 |
| C409 | 4030011600 | S.CER C1608 JB 1E 104K-T | T | 54.1/23.2 |
| C410 | 4030009000 | S.CER C2012 JB 1C 224K-T | T | 62.1/24.2 |
| C411 | 4550007480 | S.TAN F930J106MAABMA | B | 63.1/28.4 |
| C412 | 4550007480 | S.TAN F930J106MAABMA | B | 58.3/29.1 |
| C413 | 4030009000 | S.CER C2012 JB 1C 224K-T | T | 59/22.5 |
| C414 | 4030011600 | S.CER C1608 JB 1E 104K-T | T | 54.1/24.5 |
| C415 | 4550007520 | S.TAN F931A106MAABMA | B | 53/26.5 |
| C416 | 4550007520 | S.TAN F931A106MAABMA | B | 53/31.3 |
| C417 | 4030017840 | S.CER C2012 CH 1H 222J-T | T | 58/24.2 |
| C450 | 4030011600 | S.CER C1608 JB 1E 104K-T | T | 43.1/35.3 |
| C451 | 4030011600 | S.CER C1608 JB 1E 104K-T | T | 43.6/42.9 |
| C452 | 4030006860 | S.CER C1608 JB 1H 102K-T | T | 40.8/39.6 |
| C501 | 4030011600 | S.CER C1608 JB 1E 104K-T | T | 74.8/24 |
| C502 | 4550007500 | S.TAN F931D106MBABMA | B | 77.5/33.1 |
| C503 | 4030011600 | S.CER C1608 JB 1E 104K-T | T | 71.6/23.4 |
| C504 | 4550007500 | S.TAN F931D106MBABMA | B | 67.9/29.1 |
| C506 | 4030007090 | S.CER C1608 CH 1H 470J-T | T | 67.1/28.4 |
| C507 | 4030007090 | S.CER C1608 CH 1H 470J-T | T | 76.1/27.3 |
| C551 | 4550007520 | S.TAN F931A106MAABMA | B | 50.3/8.7 |
| C552 | 4030011600 | S.CER C1608 JB 1E 104K-T | T | 49.5/5.5 |
| C553 | 4550007520 | S.TAN F931A106MAABMA | B | 55/13.3 |
| C554 | 4030011600 | S.CER C1608 JB 1E 104K-T | T | 60/7.6 |
| C555 | 4030011600 | S.CER C1608 JB 1E 104K-T | T | 59.8/4.6 |
| C556 | 4550007480 | S.TAN F930J106MAABMA | B | 53.6/7.1 |
| C557 | 4030011600 | S.CER C1608 JB 1E 104K-T | T | 60.7/2.8 |
| C558 | 4550007520 | S.TAN F931A106MAABMA | B | 53.6/4.3 |
| C601 | 4550007480 | S.TAN F930J106MAABMA | B | 61.3/17.2 |
| C602 | 4030018510 | S.CER C2012 CH 1H 682J-T | T | 58.8/16.5 |
| C603 | 4550007500 | S.TAN F931D106MBABMA | B | 68.2/15 |
| C604 | 4030011600 | S.CER C1608 JB 1E 104K-T | T | 58.2/14.2 |
| C605 | 4030011600 | S.CER C1608 JB 1E 104K-T | T | 64.5/13.9 |
| C606 | 4550007500 | S.TAN F931D106MBABMA | B | 69.2/19.2 |
| C607 | 4030018510 | S.CER C2012 CH 1H 682J-T | T | 67/22.5 |
| C608 | 4030007050 | S.CER C1608 CH 1H 220J-T | T | 68.3/16.7 |
| C651 | 4550007480 | S.TAN F930J106MAABMA | B | 60.1/9.2 |
| C652 | 4030018510 | S.CER C2012 CH 1H 682J-T | T | 61.9/6.6 |
| C653 | 4550007500 | S.TAN F931D106MBABMA | B | 59.9/2.6 |
| C654 | 4030011600 | S.CER C1608 JB 1E 104K-T | T | 64/2.5 |
| C655 | 4030011600 | S.CER C1608 JB 1E 104K-T | T | 67.7/2.5 |
| C656 | 4550007500 | S.TAN F931D106MBABMA | B | 59.9/6 |
| C657 | 4030018510 | S.CER C2012 CH 1H 682J-T | T | 68.3/12.2 |
| C658 | 4030007050 | S.CER C1608 CH 1H 220J-T | T | 71.4/6.9 |
| C701 | 4030017840 | S.CER C2012 CH 1H 222J-T | T | 74.3/21.1 |
| C702 | 4030017840 | S.CER C2012 CH 1H 222J-T | T | 78.9/13.4 |
| C703 | 4550007500 | S.TAN F931D106MBABMA | B | 75.3/15.7 |
| C704 | 4030011600 | S.CER C1608 JB 1E 104K-T | T | 75.9/12.8 |
| C705 | 4030011600 | S.CER C1608 JB 1E 104K-T | T | 79.4/20.6 |
| C706 | 4550007500 | S.TAN F931D106MBABMA | B | 75.6/21.1 |
| C707 | 4030007050 | S.CER C1608 CH 1H 220J-T | T | 78.7/18 |
| C771 | 4550007480 | S.TAN F930J106MAABMA | B | 49.8/14.1 |
| C772 | 4030011600 | S.CER C1608 JB 1E 104K-T | T | 49.5/15 |
| C773 | 4550007480 | S.TAN F930J106MAABMA | B | 55/18.1 |
| C801 | 4030011600 | S.CER C1608 JB 1E 104K-T | T | 77.4/24 |
| C921 | 4550007510 | S.TAN F931C106MBABMA | B | 66.5/2.6 |
| C922 | 4030011600 | S.CER C1608 JB 1E 104K-T | T | 71/3.6 |
| C923 | 4550002830 | S.TAN TEESVD2 1V 685M12R | B | 78.3/6.5 |
| C924 | 4030011600 | S.CER C1608 JB 1E 104K-T | T | 80.1/8.6 |
| C925 | 4550007510 | S.TAN F931C106MBABMA | B | 67.1/10.5 |
| C926 | 4030011600 | S.CER C1608 JB 1E 104K-T | T | 71.8/12.7 |
| C927 | 4550002830 | S.TAN TEESVD2 1V 685M12R | B | 72.6/6.5 |
| C928 | 4030011600 | S.CER C1608 JB 1E 104K-T | T | 79.6/5.2 |
| C961 | 4030011600 | S.CER C1608 JB 1E 104K-T | B | 11.2/15.7 |
| C962 | 4550007520 | S.TAN F931A106MAABMA | B | 12/18.8 |
| C963 | 4030011600 | S.CER C1608 JB 1E 104K-T | B | 10.7/25.4 |
| C964 | 4550007520 | S.TAN F931A106MAABMA | B | 11.4/29.4 |
| | | | | |
| J921 | 6910013900 | CNR IMSA-9180S-22A | | |
| J961 | 6910012460 | CNR IMSA-9180S-30A | | |

M.=Mounted side (T: Mounted on the Top side, B: Mounted on the Bottom side)
S.=Surface mount

## [DSP-TX BOARD]

| REF NO. | ORDER NO. | DESCRIPTION | | M. | H/V LOCATION |
|---|---|---|---|---|---|
| IC1 | 1140012211 | S.IC | TMS320C6713BZDP225 | T | 28.1/20.4 |
| IC151 | 1130008361 | S.IC | TC7SHU04FU (TE85L,JF) | B | 45.5/8.1 |
| IC171 | 1130008041 | S.IC | TC7SH04FU (TE85L,JF) | T | 41.3/4.6 |
| IC181 | 1130011150 | S.IC | SN74AHC2G08HDCTR | T | 30.2/1.9 |
| IC191 | 1130011150 | S.IC | SN74AHC2G08HDCTR | T | 24/3.5 |
| IC201 | 1130012205 | S.IC | AT29LV040A-15TU (SX-2590F-4) | B | 29.3/42 |
| IC203 | 1110006411 | S.IC | R3111N111A-TR-F | T | 30.2/36.6 |
| IC301 | 1110006100 | S.IC | NJM5534MD-TE1 | T | 72.3/44.4 |
| IC341 | 1110006100 | S.IC | NJM5534MD-TE1 | T | 72.1/35.2 |
| IC371 | 1110006100 | S.IC | NJM5534MD-TE1 | T | 59.4/44.4 |
| IC401 | 1110006111 | S.IC | AK5394AVSP/P | T | 54.2/31 |
| IC451 | 1130006891 | S.IC | TC7S04FU (TE85R,F) | T | 42.8/35.8 |
| IC452 | 1130012160 | S.IC | SN74LVC1GU04DCKR | T | 42.3/39.8 |
| IC551 | 1190002090 | S.IC | AD1854JRSZRL | T | 53.3/5.8 |
| IC601 | 1110006100 | S.IC | NJM5534MD-TE1 | T | 53.1/15.2 |
| IC651 | 1110006100 | S.IC | NJM5534MD-TE1 | T | 65.3/5 |
| IC701 | 1110006100 | S.IC | NJM5534MD-TE1 | T | 63.2/14.8 |
| IC801 | 1110006100 | S.IC | NJM5534MD-TE1 | T | 68.4/25.8 |
| IC831 | 1110006100 | S.IC | NJM5534MD-TE1 | T | 73.1/15.8 |
| IC871 | 1110006100 | S.IC | NJM5534MD-TE1 | T | 77/26.1 |
| FI101 | 2040000790 | S.LC | EXCCET103U | T | 36.5/2.2 |
| X151 | 6050011660 | S.XTL | CR-754 (30.000 MHz) | B | 40.5/2.9 |
| L1 | 6200003950 | S.COL | HF50ACC 322513-T | B | 45/39.6 |
| L2 | 6180003501 | S.COL | SLF6028T-100M1R3-PF | B | 13.6/35.4 |
| L3 | 6200003640 | S.COL | MLF1608E 100K-T | B | 10.9/7.7 |
| L401 | 6200003950 | S.COL | HF50ACC 322513-T | T | 49.4/43.1 |
| L921 | 6200003950 | S.COL | HF50ACC 322513-T | T | 75/3.7 |
| L922 | 6200003950 | S.COL | HF50ACC 322513-T | T | 79.7/8.8 |
| L924 | 6200003950 | S.COL | HF50ACC 322513-T | T | 75/8.8 |
| L925 | 6200003950 | S.COL | HF50ACC 322513-T | T | 79.7/3.7 |
| L961 | 6200003950 | S.COL | HF50ACC 322513-T | B | 11.5/11.9 |
| L962 | 6200003950 | S.COL | HF50ACC 322513-T | B | 12.6/24 |
| R1 | 7030003560 | S.RES | ERJ3GEYJ 103 V (10 k) | B | 43/22.2 |
| R2 | 7030003560 | S.RES | ERJ3GEYJ 103 V (10 k) | B | 42.2/24.2 |
| R3 | 7030003560 | S.RES | ERJ3GEYJ 103 V (10 k) | B | 43/20.9 |
| R4 | 7030003560 | S.RES | ERJ3GEYJ 103 V (10 k) | B | 42.4/13.7 |
| R5 | 7030003440 | S.RES | ERJ3GEYJ 102 V (1 k) | B | 23.2/5.5 |
| R6 | 7030003440 | S.RES | ERJ3GEYJ 102 V (1 k) | B | 21.9/5.5 |
| R7 | 7030003640 | S.RES | ERJ3GEYJ 473 V (47 k) | B | 20.6/5.5 |
| R8 | 7030003440 | S.RES | ERJ3GEYJ 102 V (1 k) | B | 13.7/8.1 |
| R9 | 7030003640 | S.RES | ERJ3GEYJ 473 V (47 k) | B | 13.7/11.5 |
| R10 | 7030003640 | S.RES | ERJ3GEYJ 473 V (47 k) | T | 43.8/13.1 |
| R11 | 7030003460 | S.RES | ERJ3GEYJ 152 V (1.5 k) | B | 41.8/8.5 |
| R12 | 7030003560 | S.RES | ERJ3GEYJ 103 V (10 k) | B | 26.8/13.8 |
| R151 | 7030003320 | S.RES | ERJ3GEYJ 101 V (100) | T | 44.6/5.3 |
| R152 | 7030003800 | S.RES | ERJ3GEYJ 105 V (1 M) | B | 43.5/6.2 |
| R171 | 7030003320 | S.RES | ERJ3GEYJ 101 V (100) | T | 41.3/1.4 |
| R181 | 7030003560 | S.RES | ERJ3GEYJ 103 V (10 k) | T | 6.4/7 |
| R182 | 7030003560 | S.RES | ERJ3GEYJ 103 V (10 k) | T | 9.2/7 |
| R183 | 7030003560 | S.RES | ERJ3GEYJ 103 V (10 k) | T | 11.8/8.3 |
| R184 | 7030003560 | S.RES | ERJ3GEYJ 103 V (10 k) | T | 11.8/7 |
| R201 | 7030003860 | S.RES | ERJ3GE JPW V | T | 30.8/39.3 |
| R301 | 7030003440 | S.RES | ERJ3GEYJ 102 V (1 k) | T | 79.5/37.7 |
| R302 | 7030009591 | S.RES | ERA3YED 472V (4.7 k) | T | 77.6/46.9 |
| R303 | 7030009591 | S.RES | ERA3YED 472V (4.7 k) | T | 75.7/46.1 |
| R304 | 7030003320 | S.RES | ERJ3GEYJ 101 V (100) | T | 78.1/40.1 |
| R305 | 7030003440 | S.RES | ERJ3GEYJ 102 V (1 k) | T | 75.7/43.5 |
| R306 | 7030003320 | S.RES | ERJ3GEYJ 101 V (100) | T | 68.9/46.1 |
| R341 | 7030003320 | S.RES | ERJ3GEYJ 101 V (100) | T | 76.2/34.6 |
| R342 | 7030003320 | S.RES | ERJ3GEYJ 101 V (100) | T | 68.5/38.4 |
| R343 | 7030005321 | S.RES | ERA3YED 103V (10 k) | T | 64.5/34.6 |
| R344 | 7030009591 | S.RES | ERA3YED 472V (4.7 k) | T | 67/33.9 |
| R345 | 7030009691 | S.RES | ERA3YED 101V (100) | T | 67.7/31.9 |
| R371 | 7030003320 | S.RES | ERJ3GEYJ 101 V (100) | B | 62.9/42.1 |
| R372 | 7030003320 | S.RES | ERJ3GEYJ 101 V (100) | T | 55.3/46.3 |
| R373 | 7030005321 | S.RES | ERA3YED 103V (10 k) | T | 63.7/46.2 |
| R374 | 7030009591 | S.RES | ERA3YED 472V (4.7 k) | T | 54.7/41.8 |
| R375 | 7030009691 | S.RES | ERA3YED 101V (100) | T | 56/40.5 |
| R401 | 7030009591 | S.RES | ERA3YED 472V (4.7 k) | T | 53.1/42.5 |
| R402 | 7030009591 | S.RES | ERA3YED 472V (4.7 k) | T | 51.6/44 |
| R403 | 7030003640 | S.RES | ERJ3GEYJ 473 V (47 k) | T | 54.1/38.7 |
| R404 | 7030003200 | S.RES | ERJ3GEYJ 100 V (10) | T | 50/40 |
| R405 | 7030003320 | S.RES | ERJ3GEYJ 101 V (100) | T | 51.1/38.1 |
| R406 | 7030003640 | S.RES | ERJ3GEYJ 473 V (47 k) | T | 49.8/38.1 |
| R407 | 7030003460 | S.RES | ERJ3GEYJ 152 V (1.5 k) | B | 48/35.4 |
| R409 | 7030003640 | S.RES | ERJ3GEYJ 473 V (47 k) | T | 51.9/23.8 |
| R410 | 7030003640 | S.RES | ERJ3GEYJ 473 V (47 k) | T | 50.6/23.8 |
| R411 | 7030003640 | S.RES | ERJ3GEYJ 473 V (47 k) | T | 49/23.8 |
| R412 | 7030003520 | S.RES | ERJ3GEYJ 472 V (4.7 k) | T | 57.2/22.2 |
| R413 | 7030003520 | S.RES | ERJ3GEYJ 472 V (4.7 k) | T | 57.2/20.9 |
| R414 | 7030003360 | S.RES | ERJ3GEYJ 221 V (220) | T | 46/38.2 |
| R451 | 7030003800 | S.RES | ERJ3GEYJ 105 V (1 M) | T | 40.4/41.1 |
| R452 | 7030003440 | S.RES | ERJ3GEYJ 102 V (1 k) | B | 45.8/35.5 |
| R551 | 7030003360 | S.RES | ERJ3GEYJ 221 V (220) | B | 54/9.3 |
| R601 | 7030006521 | S.RES | ERA3YED 561V (560) | T | 50.2/18.6 |
| R602 | 7030007661 | S.RES | ERA3YED 331V (330) | T | 50.2/19.9 |
| R603 | 7030007661 | S.RES | ERA3YED 331V (330) | T | 48.3/17.1 |
| R604 | 7030009961 | S.RES | ERA3YED 221V (220) | T | 55.4/18.6 |
| R605 | 7030007661 | S.RES | ERA3YED 331V (330) | T | 52.8/18.6 |
| R606 | 7030003320 | S.RES | ERJ3GEYJ 101 V (100) | B | 51.4/24.7 |
| R607 | 7030003320 | S.RES | ERJ3GEYJ 101 V (100) | B | 52.2/13.1 |
| R651 | 7030006521 | S.RES | ERA3YED 561V (560) | T | 62.5/8.4 |
| R652 | 7030007661 | S.RES | ERA3YED 331V (330) | T | 63.5/9.7 |
| R653 | 7030007661 | S.RES | ERA3YED 331V (330) | T | 60.3/8.2 |
| R654 | 7030009961 | S.RES | ERA3YED 221V (220) | T | 67.7/8.4 |
| R655 | 7030007661 | S.RES | ERA3YED 331V (330) | T | 65.1/8.4 |
| R656 | 7030003320 | S.RES | ERJ3GEYJ 101 V (100) | B | 67.2/8.2 |
| R657 | 7030003320 | S.RES | ERJ3GEYJ 101 V (100) | B | 65.1/2.8 |
| R701 | 7030010770 | S.RES | ERA3YED 681V (680) | T | 58/18.2 |
| R702 | 7030009861 | S.RES | ERA3YED 471V (470) | T | 62.1/20 |

## [DSP-TX BOARD]

| REF NO. | ORDER NO. | DESCRIPTION | | M. | H/V LOCATION |
|---|---|---|---|---|---|
| R703 | 7030010770 | S.RES | ERA3YED 681V (680) | T | 70.7/9.3 |
| R704 | 7030009861 | S.RES | ERA3YED 471V (470) | T | 55.6/11.8 |
| R705 | 7030009691 | S.RES | ERA3YED 101V (100) | T | 69/12 |
| R706 | 7030003320 | S.RES | ERJ3GEYJ 101 V (100) | B | 61/23.1 |
| R707 | 7030003320 | S.RES | ERJ3GEYJ 101 V (100) | B | 54.7/14.5 |
| R801 | 7030009591 | S.RES | ERA3YED 472V (4.7 k) | T | 65/22.8 |
| R802 | 7030003320 | S.RES | ERJ3GEYJ 101 V (100) | T | 63.5/22.8 |
| R803 | 7030005321 | S.RES | ERA3YED 103V (10 k) | T | 68.6/21.1 |
| R804 | 7030003320 | S.RES | ERJ3GEYJ 101 V (100) | B | 69.7/31.7 |
| R805 | 7030003320 | S.RES | ERJ3GEYJ 101 V (100) | B | 72.4/21.7 |
| R831 | 7030009591 | S.RES | ERA3YED 472V (4.7 k) | T | 68.4/17.9 |
| R832 | 7030003320 | S.RES | ERJ3GEYJ 101 V (100) | T | 68.6/19.7 |
| R833 | 7030005321 | S.RES | ERA3YED 103V (10 k) | T | 69.7/15.3 |
| R834 | 7030003320 | S.RES | ERJ3GEYJ 101 V (100) | B | 64/23.2 |
| R835 | 7030003320 | S.RES | ERJ3GEYJ 101 V (100) | B | 73.4/13.3 |
| R871 | 7030003520 | S.RES | ERJ3GEYJ 472 V (4.7 k) | T | 77.8/13.7 |
| R872 | 7030003520 | S.RES | ERJ3GEYJ 472 V (4.7 k) | T | 79.1/18.7 |
| R874 | 7030003320 | S.RES | ERJ3GEYJ 101 V (100) | B | 71.3/31.7 |
| R875 | 7030003320 | S.RES | ERJ3GEYJ 101 V (100) | B | 74.4/21.3 |
| R901 | 7030003860 | S.RES | ERJ3GE JPW V | T | 52.7/22 |
| R903 | 7030003860 | S.RES | ERJ3GE JPW V | B | 47.7/38 |
| R904 | 7030003860 | S.RES | ERJ3GE JPW V | T | 47.1/4.2 |
| R905 | 7030003860 | S.RES | ERJ3GE JPW V | B | 48.1/10.2 |
| R962 | 7030003320 | S.RES | ERJ3GEYJ 101 V (100) | T | 12.1/17.5 |
| R963 | 7030003320 | S.RES | ERJ3GEYJ 101 V (100) | T | 11.9/16.2 |
| R964 | 7030003320 | S.RES | ERJ3GEYJ 101 V (100) | T | 11.9/14.9 |
| R967 | 7030003320 | S.RES | ERJ3GEYJ 101 V (100) | T | 13.6/38.7 |
| R968 | 7030003320 | S.RES | ERJ3GEYJ 101 V (100) | T | 11.9/12.3 |
| R969 | 7030003320 | S.RES | ERJ3GEYJ 101 V (100) | T | 13.6/47.8 |
| R970 | 7030003320 | S.RES | ERJ3GEYJ 101 V (100) | T | 13.6/46.5 |
| R971 | 7030003320 | S.RES | ERJ3GEYJ 101 V (100) | T | 13.6/45.2 |
| R972 | 7030003320 | S.RES | ERJ3GEYJ 101 V (100) | T | 13.6/43.9 |
| R973 | 7030003320 | S.RES | ERJ3GEYJ 101 V (100) | T | 13.6/42.6 |
| R974 | 7030003320 | S.RES | ERJ3GEYJ 101 V (100) | T | 13.6/41.3 |
| R975 | 7030003320 | S.RES | ERJ3GEYJ 101 V (100) | T | 13.6/40 |
| R976 | 7030003320 | S.RES | ERJ3GEYJ 101 V (100) | T | 11.9/13.6 |
| C1 | 4030011600 | S.CER | C1608 JB 1E 104K-T | B | 15.2/30.4 |
| C2 | 4030011600 | S.CER | C1608 JB 1E 104K-T | B | 42.2/30.7 |
| C3 | 4030011600 | S.CER | C1608 JB 1E 104K-T | B | 18/32.9 |
| C4 | 4030011600 | S.CER | C1608 JB 1E 104K-T | B | 39.4/32.9 |
| C5 | 4030011600 | S.CER | C1608 JB 1E 104K-T | B | 23.3/25.8 |
| C6 | 4030011600 | S.CER | C1608 JB 1E 104K-T | B | 24.6/25.8 |
| C7 | 4030011600 | S.CER | C1608 JB 1E 104K-T | B | 28.7/25.8 |
| C8 | 4030011600 | S.CER | C1608 JB 1E 104K-T | B | 30/25.8 |
| C9 | 4030011600 | S.CER | C1608 JB 1E 104K-T | B | 33.8/25.8 |
| C10 | 4030011600 | S.CER | C1608 JB 1E 104K-T | B | 22.7/23.8 |
| C11 | 4030011600 | S.CER | C1608 JB 1E 104K-T | B | 35.5/23.2 |
| C12 | 4030011600 | S.CER | C1608 JB 1E 104K-T | T | 12.6/20.7 |
| C13 | 4030011600 | S.CER | C1608 JB 1E 104K-T | B | 22.7/20.2 |
| C14 | 4030011600 | S.CER | C1608 JB 1E 104K-T | B | 35.5/20.6 |
| C15 | 4030011600 | S.CER | C1608 JB 1E 104K-T | B | 22.7/18.9 |
| C16 | 4030011600 | S.CER | C1608 JB 1E 104K-T | B | 34.2/18.4 |
| C17 | 4030011600 | S.CER | C1608 JB 1E 104K-T | T | 43.5/20 |
| C18 | 4030011600 | S.CER | C1608 JB 1E 104K-T | B | 22.7/15.7 |
| C19 | 4030011600 | S.CER | C1608 JB 1E 104K-T | B | 34.2/14.9 |
| C20 | 4030011600 | S.CER | C1608 JB 1E 104K-T | B | 23.3/13.8 |
| C21 | 4030011600 | S.CER | C1608 JB 1E 104K-T | B | 24.6/13.8 |
| C22 | 4030011600 | S.CER | C1608 JB 1E 104K-T | B | 28.1/13.8 |
| C23 | 4030011600 | S.CER | C1608 JB 1E 104K-T | B | 32.6/13.1 |
| C24 | 4030011600 | S.CER | C1608 JB 1E 104K-T | B | 35.2/13.1 |
| C25 | 4030011600 | S.CER | C1608 JB 1E 104K-T | B | 17.3/6.7 |
| C26 | 4030011600 | S.CER | C1608 JB 1E 104K-T | B | 33.1/6.3 |
| C27 | 4030011600 | S.CER | C1608 JB 1E 104K-T | B | 42.4/11.1 |
| C28 | 4030011600 | S.CER | C1608 JB 1E 104K-T | B | 15/8.1 |
| C29 | 4030011600 | S.CER | C1608 JB 1E 104K-T | B | 40.9/6.6 |
| C30 | 4030011600 | S.CER | C1608 JB 1E 104K-T | T | 35.2/5 |
| C31 | 4030011600 | S.CER | C1608 JB 1E 104K-T | T | 28.5/5.2 |
| C32 | 4030011600 | S.CER | C1608 JB 1E 104K-T | T | 37.8/5 |
| C33 | 4030011600 | S.CER | C1608 JB 1E 104K-T | T | 18.6/35.5 |
| C34 | 4030011600 | S.CER | C1608 JB 1E 104K-T | T | 37.5/35.5 |
| C35 | 4030011600 | S.CER | C1608 JB 1E 104K-T | B | 26/32.9 |
| C36 | 4030011600 | S.CER | C1608 JB 1E 104K-T | B | 29.3/32.9 |
| C37 | 4030011600 | S.CER | C1608 JB 1E 104K-T | B | 36.8/32.9 |
| C38 | 4030011600 | S.CER | C1608 JB 1E 104K-T | B | 15.2/27.7 |
| C39 | 4030011600 | S.CER | C1608 JB 1E 104K-T | B | 22.4/32.9 |
| C40 | 4030011600 | S.CER | C1608 JB 1E 104K-T | B | 26.1/25.8 |
| C41 | 4030011600 | S.CER | C1608 JB 1E 104K-T | B | 22/25.8 |
| C42 | 4030011600 | S.CER | C1608 JB 1E 104K-T | B | 27.4/25.8 |
| C43 | 4030011600 | S.CER | C1608 JB 1E 104K-T | B | 32.5/25.8 |
| C44 | 4030011600 | S.CER | C1608 JB 1E 104K-T | B | 35.1/25.8 |
| C45 | 4030011600 | S.CER | C1608 JB 1E 104K-T | B | 42.2/26.8 |
| C46 | 4030011600 | S.CER | C1608 JB 1E 104K-T | B | 15.3/24.9 |
| C47 | 4030011600 | S.CER | C1608 JB 1E 104K-T | T | 43.5/29 |
| C48 | 4030011600 | S.CER | C1608 JB 1E 104K-T | B | 22.7/21.5 |
| C49 | 4030011600 | S.CER | C1608 JB 1E 104K-T | B | 42.4/17.9 |
| C50 | 4030011600 | S.CER | C1608 JB 1E 104K-T | B | 22.7/17.6 |
| C51 | 4030011600 | S.CER | C1608 JB 1E 104K-T | B | 35.5/17.5 |
| C52 | 4030011600 | S.CER | C1608 JB 1E 104K-T | B | 15/11.5 |
| C53 | 4030011600 | S.CER | C1608 JB 1E 104K-T | B | 22/13.8 |
| C54 | 4030011600 | S.CER | C1608 JB 1E 104K-T | T | 43.3/9.9 |
| C55 | 4030011600 | S.CER | C1608 JB 1E 104K-T | B | 29.4/13.8 |
| C56 | 4030011600 | S.CER | C1608 JB 1E 104K-T | B | 25.1/6.6 |
| C57 | 4030011600 | S.CER | C1608 JB 1E 104K-T | B | 29.8/6.2 |
| C58 | 4030011600 | S.CER | C1608 JB 1E 104K-T | B | 38.3/6.6 |
| C59 | 4030011600 | S.CER | C1608 JB 1E 104K-T | T | 20.3/5.3 |
| C60 | 4510007130 | S.ELE | EEFCD 0J 470R | T | 25.4/41.7 |
| C61 | 4550007480 | S.TAN | F930J106MAABMA | B | 45.2/29.7 |
| C62 | 4510007130 | S.ELE | EEFCD 0J 470R | T | 19.5/41.7 |
| C101 | 4030011600 | S.CER | C1608 JB 1E 104K-T | B | 35.7/6.5 |
| C102 | 4550007480 | S.TAN | F930J106MAABMA | B | 30.6/2.6 |
| C151 | 4030011600 | S.CER | C1608 JB 1E 104K-T | B | 45.5/10.2 |
| C152 | 4030007030 | S.CER | C1608 CH 1H 150J-T | B | 46.1/6.2 |
| C153 | 4030007030 | S.CER | C1608 CH 1H 150J-T | B | 43.1/8 |

M.=Mounted side (T: Mounted on the Top side, B: Mounted on the Bottom side)
S.=Surface mount

## [DSP-TX BOARD]

| REF NO. | ORDER NO. | DESCRIPTION | M. | H/V LOCATION |
|---|---|---|---|---|
| C171 | 4030011600 | S.CER C1608 JB 1E 104K-T | T | 41.3/2.7 |
| C181 | 4030011600 | S.CER C1608 JB 1E 104K-T | T | 31/4.3 |
| C191 | 4030011600 | S.CER C1608 JB 1E 104K-T | T | 22.6/1.2 |
| C201 | 4030011600 | S.CER C1608 JB 1E 104K-T | B | 42.3/44.3 |
| C301 | 4550007660 | S.TAN F931E105MAABMA | B | 80.4/44.1 |
| C302 | 4550007500 | S.TAN F931D106MBABMA | B | 75.6/44.1 |
| C303 | 4030011600 | S.CER C1608 JB 1E 104K-T | T | 75.7/40.7 |
| C304 | 4550007500 | S.TAN F931D106MBABMA | B | 71.5/44.1 |
| C305 | 4030011600 | S.CER C1608 JB 1E 104K-T | T | 67.6/46.1 |
| C306 | 4030007050 | S.CER C1608 CH 1H 220J-T | T | 72.3/39.8 |
| C341 | 4550007500 | S.TAN F931D106MBABMA | B | 74/34.6 |
| C342 | 4030011600 | S.CER C1608 JB 1E 104K-T | T | 75.5/32.8 |
| C343 | 4550007500 | S.TAN F931D106MBABMA | B | 66.9/36.8 |
| C344 | 4030011600 | S.CER C1608 JB 1E 104K-T | T | 67.2/38.4 |
| C345 | 4550007660 | S.TAN F931E105MAABMA | B | 76.8/38.7 |
| C346 | 4030007140 | S.CER C1608 CH 1H 121J-T | T | 68.5/33.9 |
| C347 | 4030011600 | S.CER C1608 JB 1E 104K-T | T | 67.7/35.9 |
| C348 | 4030007050 | S.CER C1608 CH 1H 220J-T | T | 72/30.6 |
| C371 | 4550007500 | S.TAN F931D106MBABMA | B | 59.8/43.8 |
| C372 | 4030011600 | S.CER C1608 JB 1E 104K-T | T | 63.7/42.9 |
| C373 | 4550007500 | S.TAN F931D106MBABMA | B | 50.1/43.9 |
| C374 | 4030011600 | S.CER C1608 JB 1E 104K-T | T | 53.4/45.5 |
| C375 | 4550007660 | S.TAN F931E105MAABMA | B | 66/43.7 |
| C376 | 4030007140 | S.CER C1608 CH 1H 121J-T | T | 56/43.1 |
| C377 | 4030011600 | S.CER C1608 JB 1E 104K-T | T | 55.3/45 |
| C378 | 4030007050 | S.CER C1608 CH 1H 220J-T | T | 59.4/39.8 |
| C401 | 4550007480 | S.TAN F930J106MAABMA | B | 54.9/43.8 |
| C402 | 4030017840 | S.CER C2012 CH 1H 222J-T | T | 58.1/37.6 |
| C403 | 4550007480 | S.TAN F930J106MAABMA | B | 63.1/35.2 |
| C404 | 4030011810 | S.CER C1608 JB 1A 224K-T | T | 61.5/37.4 |
| C405 | 4550007480 | S.TAN F930J106MAABMA | B | 58.3/36 |
| C406 | 4030011810 | S.CER C1608 JB 1A 224K-T | T | 64.5/32 |
| C407 | 4550007480 | S.TAN F930J106MAABMA | B | 51.1/36.1 |
| C408 | 4030011600 | S.CER C1608 JB 1E 104K-T | T | 54.1/37.4 |
| C410 | 4030009000 | S.CER C2012 JB 1C 224K-T | T | 61/24 |
| C411 | 4550007480 | S.TAN F930J106MAABMA | B | 62.5/28.3 |
| C412 | 4550007480 | S.TAN F930J106MAABMA | B | 58.3/29.9 |
| C413 | 4030009000 | S.CER C2012 JB 1C 224K-T | T | 64.7/28.6 |
| C414 | 4030011600 | S.CER C1608 JB 1E 104K-T | T | 54.2/24.5 |
| C415 | 4550007520 | S.TAN F931A106MAABMA | B | 52.6/29.2 |
| C416 | 4550007480 | S.TAN F930J106MAABMA | B | 56.1/24.4 |
| C417 | 4030017840 | S.CER C2012 CH 1H 222J-T | T | 57.4/24 |
| C450 | 4030011600 | S.CER C1608 JB 1E 104K-T | T | 44.2/39.7 |
| C451 | 4030011600 | S.CER C1608 JB 1E 104K-T | T | 42.9/37.8 |
| C452 | 4030006860 | S.CER C1608 JB 1H 102K-T | T | 42.9/41.9 |
| C453 | 4030007050 | S.CER C1608 CH 1H 220J | B | 45.8/36.8 |
| C551 | 4030011600 | S.CER C1608 JB 1E 104K-T | T | 48/1.7 |
| C552 | 4550007520 | S.TAN F931A106MAABMA | B | 49.8/3.3 |
| C553 | 4550007520 | S.TAN F931A106MAABMA | B | 57.2/8.9 |
| C554 | 4550007520 | S.TAN F931A106MAABMA | B | 55/3.3 |
| C555 | 4030011600 | S.CER C1608 JB 1E 104K-T | T | 58.6/2.5 |
| C556 | 4030011600 | S.CER C1608 JB 1E 104K-T | T | 58.6/5.8 |
| C557 | 4030011600 | S.CER C1608 JB 1E 104K-T | B | 57.7/4.1 |
| C601 | 4550007660 | S.TAN F931E105MAABMA | B | 50.5/9.4 |
| C602 | 4030018510 | S.CER C2012 CH 1H 682J-T | T | 48.3/14.2 |
| C603 | 4550007500 | S.TAN F931D106MBABMA | B | 50.4/15.8 |
| C604 | 4030011600 | S.CER C1608 JB 1E 104K-T | T | 49.6/11.8 |
| C605 | 4030011600 | S.CER C1608 JB 1E 104K-T | T | 52.7/11.8 |
| C606 | 4550007500 | S.TAN F931D106MBABMA | B | 51/20.8 |
| C607 | 4030018510 | S.CER C2012 CH 1H 682J-T | T | 53.2/20.1 |
| C608 | 4030007050 | S.CER C1608 CH 1H 220J-T | T | 57.6/14.5 |
| C651 | 4550007660 | S.TAN F931E105MAABMA | B | 60/8.9 |
| C652 | 4030018510 | S.CER C2012 CH 1H 682J-T | T | 60.1/5.3 |
| C653 | 4550007500 | S.TAN F931D106MBABMA | B | 62.5/3.3 |
| C654 | 4030011600 | S.CER C1608 JB 1E 104K-T | T | 62.5/1.6 |
| C655 | 4030011600 | S.CER C1608 JB 1E 104K-T | T | 69.8/1.6 |
| C656 | 4550007500 | S.TAN F931D106MBABMA | B | 63.6/9.2 |
| C657 | 4030018510 | S.CER C2012 CH 1H 682J-T | T | 66.4/10 |
| C658 | 4030007050 | S.CER C1608 CH 1H 220J-T | T | 69.9/4.4 |
| C701 | 4030017840 | S.CER C2012 CH 1H 222J-T | T | 62.1/18.5 |
| C702 | 4030017840 | S.CER C2012 CH 1H 222J-T | T | 59.2/11.1 |
| C703 | 4550007500 | S.TAN F931D106MBABMA | B | 58.7/15.3 |
| C704 | 4030011600 | S.CER C1608 JB 1E 104K-T | T | 62.4/11.3 |
| C705 | 4030011600 | S.CER C1608 JB 1E 104K-T | T | 65.5/18.2 |
| C706 | 4550007500 | S.TAN F931D106MBABMA | B | 57.7/19.3 |
| C707 | 4030007050 | S.CER C1608 CH 1H 220J-T | T | 67.8/14.1 |
| C801 | 4030006860 | S.CER C1608 JB 1H 102K-T | T | 64.2/24.6 |
| C802 | 4030011600 | S.CER C1608 JB 1E 104K-T | T | 73.3/25 |
| C803 | 4550007480 | S.TAN F930J106MAABMA | B | 76.7/16.6 |
| C804 | 4030011600 | S.CER C1608 JB 1E 104K-T | T | 72/27.9 |
| C805 | 4550007520 | S.TAN F931A106MAABMA | B | 67.2/28.6 |
| C806 | 4030011600 | S.CER C1608 JB 1E 104K-T | T | 72.5/23.1 |
| C807 | 4550007500 | S.TAN F931D106MBABMA | B | 68.4/23.6 |
| C808 | 4030007050 | S.CER C1608 CH 1H 220J-T | T | 69/30.4 |
| C831 | 4030006860 | S.CER C1608 JB 1H 102K-T | T | 69.7/17.9 |
| C832 | 4030011600 | S.CER C1608 JB 1E 104K-T | T | 76.5/16.3 |
| C833 | 4550007480 | S.TAN F930J106MAABMA | B | 69.7/16.8 |
| C834 | 4030011600 | S.CER C1608 JB 1E 104K-T | T | 77.8/17.2 |
| C835 | 4550007520 | S.TAN F931A106MAABMA | B | 64/19.7 |
| C836 | 4030011600 | S.CER C1608 JB 1E 104K-T | T | 76.5/13.7 |
| C837 | 4550007500 | S.TAN F931D106MBABMA | B | 64.7/15.3 |
| C838 | 4030007050 | S.CER C1608 CH 1H 220J-T | T | 73.6/20.5 |
| C871 | 4550007520 | S.TAN F931A106MAABMA | B | 75.5/29.4 |
| C872 | 4030011600 | S.CER C1608 JB 1E 104K-T | T | 73.5/27.9 |
| C873 | 4550007500 | S.TAN F931D106MBABMA | B | 75.6/24.3 |
| C874 | 4030011600 | S.CER C1608 JB 1E 104K-T | T | 78.2/21.5 |
| C875 | 4030007050 | S.CER C1608 CH 1H 220J-T | T | 77.2/30.9 |
| C921 | 4550007510 | S.TAN F931C106MBABMA | B | 69.3/3.8 |
| C922 | 4030011600 | S.CER C1608 JB 1E 104K-T | T | 72.8/3.5 |
| C923 | 4550002830 | S.TAN TEESVD2 1V 685M12R | B | 75.4/6 |
| C924 | 4030011600 | S.CER C1608 JB 1E 104K-T | T | 81.8/8 |
| C925 | 4550007510 | S.TAN F931C106MBABMA | B | 71.1/9.3 |
| C926 | 4030011600 | S.CER C1608 JB 1E 104K-T | T | 72.8/9 |
| C927 | 4550002830 | S.TAN TEESVD2 1V 685M12R | B | 80.7/6 |

## [DSP-TX BOARD]

| REF NO. | ORDER NO. | DESCRIPTION | M. | H/V LOCATION |
|---|---|---|---|---|
| C928 | 4030011600 | S.CER C1608 JB 1E 104K-T | T | 81.8/4.6 |
| C961 | 4030011600 | S.CER C1608 JB 1E 104K-T | B | 11.4/14.9 |
| C962 | 4550007520 | S.TAN F931A106MAABMA | B | 12.2/18.6 |
| C963 | 4030011600 | S.CER C1608 JB 1E 104K-T | B | 10.4/24.8 |
| C964 | 4550007520 | S.TAN F931A106MAABMA | B | 11.4/28.9 |
| J921 | 6910013900 | CNR IMSA-9180S-22A | | |
| J961 | 6910012460 | CNR IMSA-9180S-30A | | |

M.=Mounted side (T: Mounted on the Top side, B: Mounted on the Bottom side)
S.=Surface mount

## [SCOPE UNIT]

| REF NO. | ORDER NO. | DESCRIPTION | | M. | H/V LOCATION |
|---|---|---|---|---|---|
| IC1 | 1110006180 | S.IC | UPG2009TB-E3 | T | 85.1/9.6 |
| IC2 | 1180001771 | S.IC | TA79L05F (TE12L,F) | T | 24.5/95.6 |
| IC31 | 1110006180 | S.IC | UPG2009TB-E3 | T | 86.5/14.1 |
| IC201 | 1180002650 | S.REG | SI-3012KS-TL | T | 116.4/64.6 |
| IC401 | 1110006131 | S.IC | uPC4094G2-E1-A | T | 15.6/88.6 |
| IC403 | 1110006131 | S.IC | uPC4094G2-E1-A | T | 26.9/88.6 |
| IC404 | 1110006131 | S.IC | uPC4094G2-E1-A | T | 44/87.6 |
| IC405 | 1110002700 | S.IC | NJM2904M-TE1-#FMZB | T | 39.2/70.4 |
| IC501 | 1190002031 | S.IC | AD7650ASTZ | T | 55.5/79.2 |
| IC502 | 1130006891 | S.IC | TC7S04FU (TE85R,F) | T | 57.7/88 |
| IC505 | 1180002631 | S.REG | AD1582BRTZ-REEL7 | T | 55.4/94.6 |
| IC601 | 1140012221 | S.IC | TMS320C6711DZDP200 | T | 88.4/81.4 |
| IC602 | 1130011930 | S.IC | SN74LVC1G04DCKR | T | 68.2/67.4 |
| IC603 | 1130011930 | S.IC | SN74LVC1G04DCKR | T | 70.7/70.3 |
| IC604 | 1130008041 | S.IC | TC7SH04FU (TE85L,JF) | B | 67.4/74.6 |
| IC607 | 1110006411 | S.IC | R3111N111A-TR-F | B | 104.1/81.1 |
| IC671 | 1130012394 | S.IC | AT49BV001AN-55TU | T | 112.8/82.9 |
| IC801 | 1130009230 | S.IC | LMX2306TMX/NOPB | T | 65.6/36.5 |
| IC803 | 1130009691 | S.IC | TC74HCT7007AF (F) | B | 68/29 |
| IC820 | 1190001961 | S.IC | AD9857ASTZ | T | 93.7/35.6 |
| IC903 | 1120002921 | S.IC | ADM202EARNZ | T | 96.9/109.1 |
| IC904 | 1130005721 | S.IC | TC7W04F (TE12L,F) | T | 107.5/113 |
| IC905 | 1130005252 | S.IC | TC74HC08AF (EL,F) | B | 97/109.6 |
| IC906 | 1130009831 | S.IC | TC74VHCT04AF (F) | B | 108.4/109.6 |
| Q1 | 1530002060 | S.TR | 2SC4081 T106 R | T | 67.4/6.3 |
| Q2 | 1530003851 | S.TR | 2SC5551F-TD-E | T | 45.7/7.4 |
| Q11 | 1590000680 | S.TR | DTC114EUA T106 | T | 78.2/7.4 |
| Q12 | 1590000680 | S.TR | DTC114EUA T106 | T | 92.1/6.5 |
| Q31 | 1590000680 | S.TR | DTC114EUA T106 | T | 78.4/3.5 |
| Q32 | 1590000680 | S.TR | DTC114EUA T106 | T | 92.7/3.5 |
| Q33 | 1590000680 | S.TR | DTC114EUA T106 | T | 93/15.3 |
| Q101 | 1530003151 | S.TR | 2SC4673D-TD-E | T | 28.8/18.2 |
| Q201 | 1560000561 | S.FET | 2SK882-GR (TE85L,F) | T | 11.4/40.4 |
| Q202 | 1560000561 | S.FET | 2SK882-GR (TE85L,F) | T | 10.1/45.2 |
| Q301 | 1530003151 | S.TR | 2SC4673D-TD-E | T | 21.4/67.9 |
| Q701 | 1530003221 | S.TR | 2SC4406-4-TL-E | T | 75.3/54.2 |
| Q720 | 1530003221 | S.TR | 2SC4406-4-TL-E | T | 101.9/45.5 |
| Q810 | 1530003221 | S.TR | 2SC4406-4-TL-E | T | 73.1/37.7 |
| Q821 | 1560000331 | S.FET | 2SK210-GR (TE85R,F) | T | 43.3/45.7 |
| Q841 | 1530002060 | S.TR | 2SC4081 T106 R | T | 41.5/37.2 |
| Q842 | 1530003432 | S.TR | 2SC5226A-4-TL-E | T | 27.4/31.6 |
| Q843 | 1530003432 | S.TR | 2SC5226A-4-TL-E | T | 25/39.9 |
| Q872 | 1590000680 | S.TR | DTC114EUA T106 | T | 30.2/32.6 |
| Q903 | 1530002280 | S.TR | 2SC4081 T106 S | B | 130.2/111.8 |
| Q904 | 1510000510 | S.TR | 2SA1576A T106R | B | 126.1/105.7 |
| Q921 | 1590001330 | S.TR | DTA114EUA T106 | T | 54.5/112.7 |
| Q922 | 1590000680 | S.TR | DTC114EUA T106 | T | 50.7/112.7 |
| Q923 | 1590001330 | S.TR | DTA114EUA T106 | T | 42.9/113.5 |
| Q924 | 1590000680 | S.TR | DTC114EUA T106 | T | 40.3/113.5 |
| D1 | 1750000971 | S.DIO | CPH5513-TL-E | T | 79.7/14.9 |
| D2 | 1750000971 | S.DIO | CPH5513-TL-E | T | 72.5/15.9 |
| D3 | 1750000441 | S.DIO | 1SV263-TL-E | T | 72.1/12.8 |
| D4 | 1750000431 | S.DIO | HSB88WSTR-E | T | 10.3/68.3 |
| D11 | 1790000620 | S.DIO | MA77 (TX) | T | 83.2/4.5 |
| D12 | 1790000620 | S.DIO | MA77 (TX) | T | 87.2/4.5 |
| D101 | 1750000431 | S.DIO | HSB88WSTR-E | T | 25.7/8.2 |
| D201 | 1710000840 | S.DIO | 1SR154-400 TE25 | B | 120.3/65 |
| D401 | 1790001250 | S.DIO | MA2S111-(TX) | T | 41.2/77.1 |
| D402 | 1790001250 | S.DIO | MA2S111-(TX) | T | 39.9/75.2 |
| D403 | 1790001250 | S.DIO | MA2S111-(TX) | T | 33.4/69.5 |
| D821 | 1750000681 | S.VCP | 1SV232 (TPH2,F) | T | 57.9/43.2 |
| D822 | 1750000681 | S.VCP | 1SV232 (TPH2,F) | T | 57.9/44.9 |
| D902 | 1750000550 | S.DIO | 1SS355 TE-17 | B | 129.7/109.5 |
| FI201 | 2030000290 | S.MLH | FL-357 (45 MHz) | T | 9.3/29.6 |
| FI501 | 2040000790 | S.LC | EXCCET103U | T | 71.2/76 |
| L1 | 6200001831 | S.COL | NLV32T-100J | T | 76.3/12.8 |
| L2 | 6200001831 | S.COL | NLV32T-100J | T | 75.1/19.1 |
| L3 | 6200001831 | S.COL | NLV32T-100J | B | 70.7/15.1 |
| L4 | 6200001831 | S.COL | NLV32T-100J | T | 67.3/12.1 |
| L5 | 6150004280 | COL | LS-484B (C-14927) | | |
| L6 | 6150004280 | COL | LS-484B (C-14927) | | |
| L7 | 6200003261 | S.COL | NLV32T-101J | T | 52/16.6 |
| L8 | 6140003790 | COL | LR-442 | | |
| L9 | 6200001831 | S.COL | NLV32T-100J | T | 41.2/7.5 |
| L10 | 6200001831 | S.COL | NLV32T-100J | T | 41.2/3.2 |
| L11 | 6200001831 | S.COL | NLV32T-100J | T | 57.3/3.5 |
| L12 | 6200010450 | S.COL | C2520C-R82G-A (0.82U) | T | 57.6/15.5 |
| L13 | 6200010940 | S.COL | C2520C-39NG-A | T | 68.3/20 |
| L14 | 6200010860 | S.COL | C2520C-R10G-A (0.1U) | T | 64.1/19.2 |
| L31 | 6200001831 | S.COL | NLV32T-100J | B | 82.6/1.8 |
| L32 | 6200001831 | S.COL | NLV32T-100J | B | 78.8/5.2 |
| L33 | 6200001831 | S.COL | NLV32T-100J | B | 86.6/6 |
| L34 | 6200001831 | S.COL | NLV32T-100J | B | 90.7/3.6 |
| L51 | 6200001831 | S.COL | NLV32T-100J | B | 120.5/26 |
| L52 | 6200001831 | S.COL | NLV32T-100J | B | 126.5/39.4 |
| L53 | 6200001831 | S.COL | NLV32T-100J | T | 47.7/64.3 |
| L54 | 6200001831 | S.COL | NLV32T-100J | T | 50.7/64.3 |
| L55 | 6200003950 | S.COL | HF50ACC 322513-T | B | 119.3/33.5 |
| L56 | 6200003950 | S.COL | HF50ACC 322513-T | T | 116.1/44.6 |
| L57 | 6200003950 | S.COL | HF50ACC 322513-T | T | 121.2/27.1 |
| L58 | 6200003950 | S.COL | HF50ACC 322513-T | B | 119.3/39.1 |
| L59 | 6200003950 | S.COL | HF50ACC 322513-T | T | 119.6/34.4 |
| L60 | 6200003950 | S.COL | HF50ACC 322513-T | T | 119.6/37.6 |
| L101 | 6140003530 | COL | LR-395 | | |
| L102 | 6140003530 | COL | LR-395 | | |
| L103 | 6200003021 | S.COL | NLV32T-R33J | T | 22.3/19.7 |

## [SCOPE UNIT]

| REF NO. | ORDER NO. | DESCRIPTION | | M. | H/V LOCATION |
|---|---|---|---|---|---|
| L104 | 6200001920 | S.COL | ELJNC R15K-F | B | 22.7/16.4 |
| L201 | 6150004250 | COL | LS-471A (C-14922) | | |
| L202 | 6150004280 | COL | LS-484B (C-14927) | | |
| L203 | 6150004280 | COL | LS-484B (C-14927) | | |
| L204 | 6200001831 | S.COL | NLV32T-100J | B | 3.3/46.6 |
| L205 | 6200002431 | S.COL | NLV25T-082J | B | 10.4/17.6 |
| L301 | 6140003530 | COL | LR-395 | | |
| L302 | 6140003530 | COL | LR-395 | | |
| L303 | 6200003041 | S.COL | NLV32T-R68J | T | 21/74.1 |
| L304 | 6200001831 | S.COL | NLV32T-100J | B | 23.2/72.6 |
| L401 | 6200003171 | S.COL | NLV32T-330J | T | 10.4/83.2 |
| L501 | 6200001831 | S.COL | NLV32T-100J | T | 53.8/64.3 |
| L502 | 6200001831 | S.COL | NLV32T-100J | B | 57.6/69.6 |
| L551 | 6180003501 | S.COL | SLF6028T-100M1R3-PF | T | 105.8/64.4 |
| L552 | 6200001831 | S.COL | NLV32T-100J | T | 106.3/69.9 |
| L671 | 6200001831 | S.COL | NLV32T-100J | T | 110.9/69.9 |
| L701 | 6200005491 | S.COL | NLV32T-331J | T | 76/51.4 |
| L720 | 6200001831 | S.COL | NLV32T-100J | T | 82/34.6 |
| L721 | 6200001831 | S.COL | NLV32T-100J | T | 109.4/41 |
| L722 | 6200001831 | S.COL | NLV32T-100J | T | 110.8/45.2 |
| L761 | 6200003011 | S.COL | NLV32T-R27J | T | 106.3/22.3 |
| L762 | 6200003021 | S.COL | NLV32T-R33J | T | 102.7/23 |
| L763 | 6200003251 | S.COL | NLV32T-R39J | T | 97.9/22.4 |
| L764 | 6200003251 | S.COL | NLV32T-R39J | T | 93.6/23.4 |
| L801 | 6200005491 | S.COL | NLV32T-331J | T | 69.7/40.9 |
| L802 | 6200005491 | S.COL | NLV32T-331J | T | 70.3/26.7 |
| L821 | 6200001831 | S.COL | NLV32T-100J | T | 61.7/45.7 |
| L822 | 6190001441 | COL | #E526GN-110504 | | |
| L823 | 6200001851 | S.COL | NLV32T-5R6J | T | 40.7/42.2 |
| L825 | 6200003261 | S.COL | NLV32T-101J | T | 51.7/52.2 |
| L841 | 6200003261 | S.COL | NLV32T-101J | | B26.8/33 |
| L842 | 6200003031 | S.COL | NLV32T-R47J | T | 26.8/34.5 |
| L851 | 6200003431 | S.COL | NLV32T-R10J | T | 27.4/45 |
| L852 | 6200001471 | S.COL | NLV32T-R12J | T | 27/48.9 |
| L902 | 6200003241 | S.COL | NLV32T-221J | T | 128.1/107.7 |
| R1 | 7030003360 | S.RES | ERJ3GEYJ 221 V (220) | T | 79.6/12.5 |
| R2 | 7030003480 | S.RES | ERJ3GEYJ 222 V (2.2 k) | T | 70.7/10.8 |
| R3 | 7030003440 | S.RES | ERJ3GEYJ 102 V (1 k) | T | 70.7/9.5 |
| R4 | 7030003460 | S.RES | ERJ3GEYJ 152 V (1.5 k) | T | 67.8/8.2 |
| R5 | 7030003520 | S.RES | ERJ3GEYJ 472 V (4.7 k) | T | 66.6/4.4 |
| R6 | 7030003440 | S.RES | ERJ3GEYJ 102 V (1 k) | T | 69.4/5 |
| R7 | 7030003290 | S.RES | ERJ3GEYJ 560 V (56) | T | 49.8/17.3 |
| R8 | 7030003440 | S.RES | ERJ3GEYJ 102 V (1 k) | T | 48.4/3.5 |
| R9 | 7030003500 | S.RES | ERJ3GEYJ 332 V (3.3 k) | T | 46/4.2 |
| R11 | 7310005550 | S.TRI | TMC3ADCJ4X 22K | T | 61.7/3.8 |
| R12 | 7030003320 | S.RES | ERJ3GEYJ 101 V (100) | T | 46.7/10.6 |
| R14 | 7030003340 | S.RES | ERJ3GEYJ 151 V (150) | T | 82.3/2.4 |
| R16 | 7030003440 | S.RES | ERJ3GEYJ 102 V (1 k) | T | 80.2/6.7 |
| R17 | 7030003440 | S.RES | ERJ3GEYJ 102 V (1 k) | T | 81.5/6.7 |
| R18 | 7030003340 | S.RES | ERJ3GEYJ 151 V (150) | T | 87.4/2.4 |
| R20 | 7030003440 | S.RES | ERJ3GEYJ 102 V (1 k) | T | 90.2/6.7 |
| R21 | 7030003440 | S.RES | ERJ3GEYJ 102 V (1 k) | T | 88.9/6.7 |
| R34 | 7030003440 | S.RES | ERJ3GEYJ 102 V (1 k) | T | 78.4/5.5 |
| R35 | 7030003440 | S.RES | ERJ3GEYJ 102 V (1 k) | T | 89.4/3.5 |
| R36 | 7030003520 | S.RES | ERJ3GEYJ 472 V (4.7 k) | T | 91/14.7 |
| R37 | 7030003500 | S.RES | ERJ3GEYJ 332 V (3.3 k) | T | 89.7/14.7 |
| R38 | 7030003520 | S.RES | ERJ3GEYJ 472 V (4.7 k) | T | 82/13.9 |
| R39 | 7030003500 | S.RES | ERJ3GEYJ 332 V (3.3 k) | T | 83.3/13.9 |
| R51 | 7030003520 | S.RES | ERJ3GEYJ 472 V (4.7 k) | T | 80.6/9.8 |
| R52 | 7030003520 | S.RES | ERJ3GEYJ 472 V (4.7 k) | T | 90.3/9.9 |
| R53 | 7030003320 | S.RES | ERJ3GEYJ 101 V (100) | B | 126/32.3 |
| R54 | 7030003500 | S.RES | ERJ3GEYJ 332 V (3.3 k) | T | 81.9/9.8 |
| R55 | 7030003500 | S.RES | ERJ3GEYJ 332 V (3.3 k) | T | 88.4/9.8 |
| R61 | 7030003320 | S.RES | ERJ3GEYJ 101 V (100) | B | 128.7/49 |
| R62 | 7030003320 | S.RES | ERJ3GEYJ 101 V (100) | T | 122.3/50.4 |
| R63 | 7030003320 | S.RES | ERJ3GEYJ 101 V (100) | B | 128.7/51 |
| R64 | 7030003320 | S.RES | ERJ3GEYJ 101 V (100) | T | 122.3/53.3 |
| R65 | 7030003320 | S.RES | ERJ3GEYJ 101 V (100) | B | 128.7/53 |
| R66 | 7030003320 | S.RES | ERJ3GEYJ 101 V (100) | T | 123.6/56.7 |
| R71 | 7030003320 | S.RES | ERJ3GEYJ 101 V (100) | B | 128.7/55 |
| R72 | 7030003320 | S.RES | ERJ3GEYJ 101 V (100) | T | 121.7/47.4 |
| R73 | 7030003320 | S.RES | ERJ3GEYJ 101 V (100) | T | 121.7/43.3 |
| R74 | 7030003320 | S.RES | ERJ3GEYJ 101 V (100) | B | 128.7/43.4 |
| R75 | 7030003320 | S.RES | ERJ3GEYJ 101 V (100) | T | 121.7/44.7 |
| R76 | 7030003320 | S.RES | ERJ3GEYJ 101 V (100) | B | 128.7/45.4 |
| R77 | 7030003320 | S.RES | ERJ3GEYJ 101 V (100) | T | 121.7/46 |
| R81 | 7030010520 | S.RES | ERJ1TYJ 101U (100) | B | 122.9/46.2 |
| R103 | 7030003480 | S.RES | ERJ3GEYJ 222 V (2.2 k) | T | 33.8/18 |
| R104 | 7030003320 | S.RES | ERJ3GEYJ 101 V (100) | T | 25.9/21.9 |
| R105 | 7030003370 | S.RES | ERJ3GEYJ 271 V (270) | B | 18.3/14.3 |
| R106 | 7030003230 | S.RES | ERJ3GEYJ 180 V (18) | B | 19.1/11.9 |
| R107 | 7030003370 | S.RES | ERJ3GEYJ 271 V (270) | B | 18.3/8.4 |
| R108 | 7030003370 | S.RES | ERJ3GEYJ 271 V (270) | B | 14.6/8.4 |
| R109 | 7030003230 | S.RES | ERJ3GEYJ 180 V (18) | B | 11.2/9.7 |
| R110 | 7030003370 | S.RES | ERJ3GEYJ 271 V (270) | B | 11.2/12 |
| R111 | 7030003550 | S.RES | ERJ3GEYJ 822 V (8.2 k) | T | 29.8/14.9 |
| R112 | 7030003320 | S.RES | ERJ3GEYJ 101 V (100) | T | 33.8/19.3 |
| R113 | 7030003860 | S.RES | ERJ3GE JPW V | B | 19.5/18 |
| R201 | 7030003430 | S.RES | ERJ3GEYJ 821 V (820) | T | 11.3/37.1 |
| R202 | 7030003430 | S.RES | ERJ3GEYJ 821 V (820) | T | 11.3/35.8 |
| R203 | 7030003280 | S.RES | ERJ3GEYJ 470 V (47) | B | 3.1/39.8 |
| R204 | 7030003560 | S.RES | ERJ3GEYJ 103 V (10 k) | T | 12/45 |
| R205 | 7030003280 | S.RES | ERJ3GEYJ 470 V (47) | B | 6.3/46.6 |
| R206 | 7030003380 | S.RES | ERJ3GEYJ 331 V (330) | B | 11.4/54.9 |
| R207 | 7030003220 | S.RES | ERJ3GEYJ 150 V (15) | B | 9.3/55.7 |
| R208 | 7030003380 | S.RES | ERJ3GEYJ 331 V (330) | B | 10.1/57.7 |
| R209 | 7030003640 | S.RES | ERJ3GEYJ 473 V (47 k) | B | 9.9/46.6 |
| R210 | 7030003600 | S.RES | ERJ3GEYJ 223 V (22 k) | T | 112.9/63.4 |
| R301 | 7030003320 | S.RES | ERJ3GEYJ 101 V (100) | T | 9.8/86.7 |
| R302 | 7030003370 | S.RES | ERJ3GEYJ 271 V (270) | B | 10.3/75.4 |
| R303 | 7030003230 | S.RES | ERJ3GEYJ 180 V (18) | B | 15.2/74.6 |
| R304 | 7030003370 | S.RES | ERJ3GEYJ 271 V (270) | B | 19.1/75.4 |

M.=Mounted side (T: Mounted on the Top side, B: Mounted on the Bottom side)
S.=Surface mount

## [SCOPE UNIT]

| REF NO. | ORDER NO. | DESCRIPTION | M. | H/V LOCATION |
|---|---|---|---|---|
| R305 | 7030003320 | S.RES ERJ3GEYJ 101 V (100) | T | 23.7/73.9 |
| R306 | 7030003480 | S.RES ERJ3GEYJ 222 V (2.2 k) | T | 21.4/63.4 |
| R307 | 7030003550 | S.RES ERJ3GEYJ 822 V (8.2 k) | T | 18.3/66.9 |
| R308 | 7030003340 | S.RES ERJ3GEYJ 151 V (150) | T | 24.4/63.4 |
| R402 | 7030003440 | S.RES ERJ3GEYJ 102 V (1 k) | B | 13.4/89.7 |
| R403 | 7030003440 | S.RES ERJ3GEYJ 102 V (1 k) | B | 16.3/90.4 |
| R404 | 7030003440 | S.RES ERJ3GEYJ 102 V (1 k) | B | 19/86.7 |
| R405 | 7030003440 | S.RES ERJ3GEYJ 102 V (1 k) | B | 22.4/90.5 |
| R410 | 7030003560 | S.RES ERJ3GEYJ 103 V (10 k) | T | 21.3/85.8 |
| R411 | 7030003560 | S.RES ERJ3GEYJ 103 V (10 k) | T | 9.2/91.1 |
| R412 | 7030003560 | S.RES ERJ3GEYJ 103 V (10 k) | T | 13.4/92.1 |
| R413 | 7030003730 | S.RES ERJ3GEYJ 274 V (270 k) | T | 9.8/89.3 |
| R414 | 7030003560 | S.RES ERJ3GEYJ 103 V (10 k) | B | 26.9/88 |
| R415 | 7030003560 | S.RES ERJ3GEYJ 103 V (10 k) | T | 31.6/90 |
| R416 | 7310005510 | S.TRI TMC3ADCS5X 470K | T | 34.5/87 |
| R417 | 7030003630 | S.RES ERJ3GEYJ 393 V (39 k) | T | 43.1/95.4 |
| R418 | 7030003570 | S.RES ERJ3GEYJ 123 V (12 k) | T | 45.4/92.2 |
| R419 | 7030003220 | S.RES ERJ3GEYJ 150 V (15) | T | 47.9/92.3 |
| R420 | 7030003580 | S.RES ERJ3GEYJ 153 V (15 k) | T | 40.9/81.7 |
| R421 | 7030003560 | S.RES ERJ3GEYJ 103 V (10 k) | T | 40.5/85.5 |
| R422 | 7030003560 | S.RES ERJ3GEYJ 103 V (10 k) | T | 42.6/92.2 |
| R423 | 7030003540 | S.RES ERJ3GEYJ 682 V (6.8 k) | T | 43.1/94.1 |
| R425 | 7310005540 | S.TRI TMC3ADC14X 10K | T | 45.3/81.2 |
| R426 | 7030003560 | S.RES ERJ3GEYJ 103 V (10 k) | T | 48.7/76.5 |
| R427 | 7030003560 | S.RES ERJ3GEYJ 103 V (10 k) | T | 39.9/77.2 |
| R428 | 7030003680 | S.RES ERJ3GEYJ 104 V (100 k) | T | 37/75.7 |
| R429 | 7030003650 | S.RES ERJ3GEYJ 563 V (56 k) | T | 34.7/67.7 |
| R430 | 7030003740 | S.RES ERJ3GEYJ 334 V (330 k) | T | 38.8/73.9 |
| R431 | 7030003740 | S.RES ERJ3GEYJ 334 V (330 k) | T | 36.2/73.9 |
| R432 | 7030003640 | S.RES ERJ3GEYJ 473 V (47 k) | T | 39.6/81.7 |
| R433 | 7030003680 | S.RES ERJ3GEYJ 104 V (100 k) | T | 38.8/66.4 |
| R434 | 7030003320 | S.RES ERJ3GEYJ 101 V (100) | T | 33.4/66.9 |
| R435 | 7030003680 | S.RES ERJ3GEYJ 104 V (100 k) | T | 40.1/66.4 |
| R436 | 7030003680 | S.RES ERJ3GEYJ 104 V (100 k) | T | 36.9/67 |
| R437 | 7030003680 | S.RES ERJ3GEYJ 104 V (100 k) | T | 43.8/67.7 |
| R438 | 7030003680 | S.RES ERJ3GEYJ 104 V (100 k) | T | 43.8/70.4 |
| R500 | 7030003860 | S.RES ERJ3GE JPW V | T | 53.2/71.7 |
| R501 | 7030003320 | S.RES ERJ3GEYJ 101 V (100) | T | 55.1/73 |
| R502 | 7030003560 | S.RES ERJ3GEYJ 103 V (10 k) | B | 56.3/74.6 |
| R503 | 7030003560 | S.RES ERJ3GEYJ 103 V (10 k) | B | 59.2/75.4 |
| R504 | 7030003560 | S.RES ERJ3GEYJ 103 V (10 k) | T | 60.8/74.2 |
| R505 | 7030003560 | S.RES ERJ3GEYJ 103 V (10 k) | T | 61.6/76 |
| R506 | 7030003560 | S.RES ERJ3GEYJ 103 V (10 k) | B | 57.3/78.2 |
| R507 | 7030003320 | S.RES ERJ3GEYJ 101 V (100) | T | 61.5/87.1 |
| R509 | 7030003640 | S.RES ERJ3GEYJ 473 V (47 k) | T | 60.5/89.8 |
| R602 | 7030003560 | S.RES ERJ3GEYJ 103 V (10 k) | B | 101.3/75.6 |
| R603 | 7030003440 | S.RES ERJ3GEYJ 102 V (1 k) | B | 83.7/77.3 |
| R604 | 7030003560 | S.RES ERJ3GEYJ 103 V (10 k) | B | 92.1/67.4 |
| R605 | 7030003560 | S.RES ERJ3GEYJ 103 V (10 k) | B | 89.8/65.8 |
| R606 | 7030003440 | S.RES ERJ3GEYJ 102 V (1 k) | T | 79.6/95.8 |
| R607 | 7030003440 | S.RES ERJ3GEYJ 102 V (1 k) | B | 77.6/95.9 |
| R608 | 7030003440 | S.RES ERJ3GEYJ 102 V (1 k) | B | 71.8/88.2 |
| R609 | 7030003560 | S.RES ERJ3GEYJ 103 V (10 k) | T | 83.5/65.8 |
| R610 | 7030003800 | S.RES ERJ3GEYJ 105 V (1 M) | T | 70.5/67.6 |
| R611 | 7030004040 | S.RES ERJ3GEYJ 4R7 V (4.7) | T | 66.2/70.3 |
| R612 | 7030004040 | S.RES ERJ3GEYJ 4R7 V (4.7) | T | 67.5/70.3 |
| R615 | 7030003320 | S.RES ERJ3GEYJ 101 V (100) | T | 72.9/65.7 |
| R616 | 7030003520 | S.RES ERJ3GEYJ 472 V (4.7 k) | T | 73.7/93.5 |
| R617 | 7030003520 | S.RES ERJ3GEYJ 472 V (4.7 k) | T | 72.4/93.5 |
| R618 | 7030003560 | S.RES ERJ3GEYJ 103 V (10 k) | B | 81.8/66.8 |
| R619 | 7030003560 | S.RES ERJ3GEYJ 103 V (10 k) | B | 88/66.8 |
| R620 | 7030003440 | S.RES ERJ3GEYJ 102 V (1 k) | B | 73.2/88.9 |
| R621 | 7030003440 | S.RES ERJ3GEYJ 102 V (1 k) | B | 72.6/84.7 |
| R622 | 7030003860 | S.RES ERJ3GE JPW V | B | 111.9/79.5 |
| R623 | 7030003860 | S.RES ERJ3GE JPW V | B | 106.1/78.5 |
| R633 | 7030003560 | S.RES ERJ3GEYJ 103 V (10 k) | B | 74.7/74.4 |
| R634 | 7030003860 | S.RES ERJ3GE JPW V | T | 74/70.4 |
| R635 | 7030003280 | S.RES ERJ3GEYJ 470 V (47) | T | 73.4/68.4 |
| R636 | 7030003280 | S.RES ERJ3GEYJ 470 V (47) | T | 72.7/70.4 |
| R701 | 7030003240 | S.RES ERJ3GEYJ 220 V (22) | T | 73/51.7 |
| R702 | 7030003560 | S.RES ERJ3GEYJ 103 V (10 k) | T | 77.3/54.4 |
| R703 | 7030003320 | S.RES ERJ3GEYJ 101 V (100) | T | 72.7/55.1 |
| R704 | 7030003280 | S.RES ERJ3GEYJ 470 V (47) | T | 73.3/57 |
| R705 | 7030003340 | S.RES ERJ3GEYJ 151 V (150) | T | 77.4/57 |
| R720 | 7030003370 | S.RES ERJ3GEYJ 271 V (270) | T | 107/43.2 |
| R721 | 7030003560 | S.RES ERJ3GEYJ 103 V (10 k) | T | 104/45.3 |
| R722 | 7030003340 | S.RES ERJ3GEYJ 151 V (150) | T | 107.2/45.9 |
| R723 | 7030003440 | S.RES ERJ3GEYJ 102 V (1 k) | B | 91.7/28.7 |
| R724 | 7030003440 | S.RES ERJ3GEYJ 102 V (1 k) | B | 91.1/30.6 |
| R725 | 7030003440 | S.RES ERJ3GEYJ 102 V (1 k) | B | 87.6/28.5 |
| R726 | 7030003440 | S.RES ERJ3GEYJ 102 V (1 k) | B | 91.2/26.8 |
| R727 | 7030003440 | S.RES ERJ3GEYJ 102 V (1 k) | B | 94.8/43 |
| R729 | 7030003280 | S.RES ERJ3GEYJ 470 V (47) | T | 98.7/45.6 |
| R730 | 7030003560 | S.RES ERJ3GEYJ 103 V (10 k) | B | 96.4/40.1 |
| R731 | 7030003460 | S.RES ERJ3GEYJ 152 V (1.5 k) | T | 105.1/38.6 |
| R732 | 7030003510 | S.RES ERJ3GEYJ 392 V (3.9 k) | T | 106.5/34.2 |
| R734 | 7030003510 | S.RES ERJ3GEYJ 392 V (3.9 k) | T | 102.5/42.7 |
| R735 | 7030003280 | S.RES ERJ3GEYJ 470 V (47) | T | 106.5/30.9 |
| R736 | 7030003280 | S.RES ERJ3GEYJ 470 V (47) | T | 106.5/32.2 |
| R737 | 7030003440 | S.RES ERJ3GEYJ 102 V (1 k) | T | 88.4/24 |
| R738 | 7030003640 | S.RES ERJ3GEYJ 473 V (47 k) | T | 88.1/46.1 |
| R739 | 7030003510 | S.RES ERJ3GEYJ 392 V (3.9 k) | T | 106.5/35.5 |
| R741 | 7030003860 | S.RES ERJ3GE JPW V | B | 109.8/26.2 |
| R742 | 7030003860 | S.RES ERJ3GE JPW V | T | 86.8/46 |
| R744 | 7030003860 | S.RES ERJ3GE JPW V | T | 87.7/26.2 |
| R745 | 7030003860 | S.RES ERJ3GE JPW V | T | 85/27.5 |
| R748 | 7030003860 | S.RES ERJ3GE JPW V | T | 89.7/24 |
| R764 | 7030003370 | S.RES ERJ3GEYJ 271 V (270) | T | 48/21.5 |
| R765 | 7030003230 | S.RES ERJ3GEYJ 180 V (18) | T | 45.6/20.8 |
| R766 | 7030003370 | S.RES ERJ3GEYJ 271 V (270) | T | 43.4/21.5 |
| R767 | 7030003860 | S.RES ERJ3GE JPW V | T | 95.7/21.5 |
| R771 | 7030003860 | S.RES ERJ3GE JPW V | T | 41/20.8 |
| R801 | 7030003440 | S.RES ERJ3GEYJ 102 V (1 k) | B | 68.1/38 |
| R802 | 7030003440 | S.RES ERJ3GEYJ 102 V (1 k) | B | 71.2/35.6 |

## [SCOPE UNIT]

| REF NO. | ORDER NO. | DESCRIPTION | M. | H/V LOCATION |
|---|---|---|---|---|
| R803 | 7030003440 | S.RES ERJ3GEYJ 102 V (1 k) | B | 68.1/35.7 |
| R806 | 7030003520 | S.RES ERJ3GEYJ 472 V (4.7 k) | T | 62.4/40.1 |
| R808 | 7030003600 | S.RES ERJ3GEYJ 223 V (22 k) | T | 61.7/42.6 |
| R809 | 7030003840 | S.RES ERJ3GEYJ 225 V (2.2 M) | T | 63.9/41.6 |
| R810 | 7030003370 | S.RES ERJ3GEYJ 271 V (270) | T | 74.1/35.2 |
| R811 | 7030003560 | S.RES ERJ3GEYJ 103 V (10 k) | T | 73.8/40.2 |
| R812 | 7030003280 | S.RES ERJ3GEYJ 470 V (47) | T | 71/31.6 |
| R813 | 7030003340 | S.RES ERJ3GEYJ 151 V (150) | T | 73.8/45.4 |
| R814 | 7030003500 | S.RES ERJ3GEYJ 332 V (3.3 k) | T | 60.3/41.1 |
| R821 | 7030003680 | S.RES ERJ3GEYJ 104 V (100 k) | T | 39.3/45.9 |
| R822 | 7030003680 | S.RES ERJ3GEYJ 104 V (100 k) | T | 46.8/44.6 |
| R823 | 7030003370 | S.RES ERJ3GEYJ 271 V (270) | T | 43.5/41.7 |
| R841 | 7030003200 | S.RES ERJ3GEYJ 100 V (10) | T | 37.9/39.9 |
| R842 | 7030003360 | S.RES ERJ3GEYJ 221 V (220) | T | 42.2/35 |
| R843 | 7030003500 | S.RES ERJ3GEYJ 332 V (3.3 k) | T | 40.1/39.1 |
| R844 | 7030003540 | S.RES ERJ3GEYJ 682 V (6.8 k) | T | 38.6/37.8 |
| R845 | 7030003360 | S.RES ERJ3GEYJ 221 V (220) | T | 38.6/36.5 |
| R846 | 7030003380 | S.RES ERJ3GEYJ 331 V (330) | T | 40.4/32 |
| R847 | 7030003370 | S.RES ERJ3GEYJ 271 V (270) | T | 30.5/30 |
| R848 | 7030003540 | S.RES ERJ3GEYJ 682 V (6.8 k) | T | 28.4/37.3 |
| R849 | 7030003500 | S.RES ERJ3GEYJ 332 V (3.3 k) | T | 30.3/34.8 |
| R850 | 7030003390 | S.RES ERJ3GEYJ 391 V (390) | T | 26.5/37.9 |
| R851 | 7030003360 | S.RES ERJ3GEYJ 221 V (220) | T | 24.4/37.1 |
| R852 | 7030003490 | S.RES ERJ3GEYJ 272 V (2.7 k) | T | 28.4/40 |
| R853 | 7030003510 | S.RES ERJ3GEYJ 392 V (3.9 k) | T | 30.3/41 |
| R854 | 7030003360 | S.RES ERJ3GEYJ 221 V (220) | T | 30.1/42.4 |
| R855 | 7030008180 | S.RES ERJ12YJ331U (330) | T | 42.5/52.9 |
| R856 | 7030003370 | S.RES ERJ3GEYJ 271 V (270) | T | 22.9/60.3 |
| R857 | 7030003230 | S.RES ERJ3GEYJ 180 V (18) | T | 20.7/59.6 |
| R858 | 7030003320 | S.RES ERJ3GEYJ 101 V (100) | T | 20.7/61.1 |
| R859 | 7030003260 | S.RES ERJ3GEYJ 330 V (33) | T | 24.4/44.2 |
| R860 | 7030003400 | S.RES ERJ3GEYJ 471 V (470) | T | 42.4/32 |
| R861 | 7030003860 | S.RES ERJ3GE JPW V | T | 24.4/60.3 |
| R905 | 7030003620 | S.RES ERJ3GEYJ 333 V (33 k) | B | 127/108.8 |
| R906 | 7030003540 | S.RES ERJ3GEYJ 682 V (6.8 k) | B | 128.6/105.8 |
| R907 | 7030003580 | S.RES ERJ3GEYJ 153 V (15 k) | B | 127.2/111.2 |
| R908 | 7030003640 | S.RES ERJ3GEYJ 473 V (47 k) | B | 124.9/108.8 |
| R913 | 7030003370 | S.RES ERJ3GEYJ 271 V (270) | T | 57.4/112.7 |
| R914 | 7030003370 | S.RES ERJ3GEYJ 271 V (270) | T | 45.9/113.5 |
| R951 | 7030003860 | S.RES ERJ3GE JPW V | B | 120.4/122.7 |
| R952 | 7030003860 | S.RES ERJ3GE JPW V | B | 97.5/126.3 |
| R953 | 7030003860 | S.RES ERJ3GE JPW V | B | 97.5/124.7 |
| R954 | 7030003860 | S.RES ERJ3GE JPW V | B | 114.7/103.6 |
| R955 | 7030003860 | S.RES ERJ3GE JPW V | T | 48.6/112.9 |
| R956 | 7030003860 | S.RES ERJ3GE JPW V | T | 39.7/110.6 |
| | | | | |
| C1 | 4030006880 | S.CER C1608 JB 1H 472K-T | T | 84.1/6.7 |
| C2 | 4030006880 | S.CER C1608 JB 1H 472K-T | T | 86.1/6.7 |
| C3 | 4030006880 | S.CER C1608 JB 1H 472K-T | T | 82.8/15.8 |
| C4 | 4030011340 | S.CER C1608 CH 1H 471J-T | T | 76.6/16.1 |
| C5 | 4030011340 | S.CER C1608 CH 1H 471J-T | T | 74.1/12.9 |
| C6 | 4030006880 | S.CER C1608 JB 1H 472K-T | T | 74.9/16.1 |
| C7 | 4030006880 | S.CER C1608 JB 1H 472K-T | T | 70.1/12.8 |
| C8 | 4030006880 | S.CER C1608 JB 1H 472K-T | T | 71.3/20 |
| C9 | 4030006880 | S.CER C1608 JB 1H 472K-T | T | 70/15.7 |
| C10 | 4030011600 | S.CER C1608 JB 1E 104K-T | T | 67.8/9.5 |
| C11 | 4030009510 | S.CER C1608 CH 1H 010B-T | B | 58.9/16.3 |
| C12 | 4030007040 | S.CER C1608 CH 1H 180J-T | B | 61.9/10 |
| C13 | 4030007040 | S.CER C1608 CH 1H 180J-T | B | 53.2/10 |
| C14 | 4030011340 | S.CER C1608 CH 1H 471J-T | B | 47.6/15 |
| C15 | 4030006880 | S.CER C1608 JB 1H 472K-T | T | 40.2/16 |
| C16 | 4030006880 | S.CER C1608 JB 1H 472K-T | T | 49.9/3.5 |
| C17 | 4030006880 | S.CER C1608 JB 1H 472K-T | B | 38.6/10 |
| C18 | 4030006960 | S.CER C1608 CH 1H 050C-T | T | 44/10.6 |
| C21 | 4030006880 | S.CER C1608 JB 1H 472K-T | T | 78.8/57 |
| C22 | 4030006880 | S.CER C1608 JB 1H 472K-T | B | 93.1/11.6 |
| C23 | 4030011600 | S.CER C1608 JB 1E 104K-T | T | 90.5/12.8 |
| C24 | 4030006880 | S.CER C1608 JB 1H 472K-T | T | 85.4/11.8 |
| C31 | 4030006880 | S.CER C1608 JB 1H 472K-T | T | 78.3/9.4 |
| C32 | 4030006880 | S.CER C1608 JB 1H 472K-T | T | 82.8/6.7 |
| C33 | 4030006880 | S.CER C1608 JB 1H 472K-T | T | 90.3/8.6 |
| C34 | 4030006880 | S.CER C1608 JB 1H 472K-T | T | 87.6/6.7 |
| C35 | 4030006900 | S.CER C1608 JB 1H 103K-T | T | 83.6/2.4 |
| C36 | 4030006900 | S.CER C1608 JB 1H 103K-T | T | 80.3/3.3 |
| C37 | 4030006900 | S.CER C1608 JB 1H 103K-T | T | 86.1/2.4 |
| C38 | 4030006900 | S.CER C1608 JB 1H 103K-T | T | 90.7/3.5 |
| C39 | 4030006860 | S.CER C1608 JB 1H 102K-T | T | 88.4/14.7 |
| C40 | 4030006860 | S.CER C1608 JB 1H 102K-T | T | 84.6/13.9 |
| C41 | 4610001830 | S.TRI TZB4S100AB10R00 | T | 57.5/19.3 |
| C42 | 4030007030 | S.CER C1608 CH 1H 150J-T | T | 68.7/15.7 |
| C43 | 4030007120 | S.CER C1608 CH 1H 820J-T | T | 67.9/17.7 |
| C44 | 4030007100 | S.CER C1608 CH 1H 560J-T | T | 67/15.7 |
| C45 | 4030007040 | S.CER C1608 CH 1H 180J-T | T | 64.9/16.4 |
| C46 | 4030008750 | S.CER C1608 CH 1H 360J-T | T | 64.9/14.9 |
| C51 | 4030006860 | S.CER C1608 JB 1H 102K-T | T | 83.2/9.8 |
| C52 | 4030006860 | S.CER C1608 JB 1H 102K-T | T | 87.1/9.8 |
| C53 | 4510008540 | S.ELE EEE1CA100SR | T | 31.7/95.8 |
| C54 | 4510008540 | S.ELE EEE1CA100SR | T | 46.9/69.3 |
| C55 | 4030011600 | S.CER C1608 JB 1E 104K-T | T | 20.4/94.8 |
| C56 | 4510008540 | S.ELE EEE1CA100SR | T | 16.6/95.8 |
| C57 | 4030011600 | S.CER C1608 JB 1E 104K-T | T | 27.9/95.9 |
| C101 | 4030006880 | S.CER C1608 JB 1H 472K-T | T | 33.8/16.7 |
| C102 | 4030007150 | S.CER C1608 CH 1H 151J-T | T | 24.6/19 |
| C103 | 4030011600 | S.CER C1608 JB 1E 104K-T | T | 24.6/21.9 |
| C106 | 4030006880 | S.CER C1608 JB 1H 472K-T | T | 33.8/20.6 |
| C107 | 4030007100 | S.CER C1608 CH 1H 560J-T | T | 23.1/16.4 |
| C108 | 4030007110 | S.CER C1608 CH 1H 680J-T | B | 23.7/21.2 |
| C109 | 4030007140 | S.CER C1608 CH 1H 121J-T | B | 22.4/18.7 |
| C110 | 4030007110 | S.CER C1608 CH 1H 680J-T | B | 21.6/21.2 |
| C201 | 4030007040 | S.CER C1608 CH 1H 180J-T | T | 10.8/24.5 |
| C202 | 4030007040 | S.CER C1608 CH 1H 180J-T | T | 4.7/30.3 |
| C204 | 4030006880 | S.CER C1608 JB 1H 472K-T | T | 11.3/34.5 |
| C205 | 4030007070 | S.CER C1608 CH 1H 330J-T | B | 5.8/39.8 |

M.=Mounted side (T: Mounted on the Top side, B: Mounted on the Bottom side)
S.=Surface mount

## [SCOPE UNIT]

| REF NO. | ORDER NO. | DESCRIPTION | M. | H/V LOCATION |
|---|---|---|---|---|
| C206 | 4030006880 | S.CER C1608 JB 1H 472K-T | T | 11.3/38.5 |
| C207 | 4030006960 | S.CER C1608 CH 1H 050C-T | T | 11.2/42.3 |
| C208 | 4030007070 | S.CER C1608 CH 1H 330J-T | B | 8.4/51 |
| C209 | 4030006880 | S.CER C1608 JB 1H 472K-T | T | 7.6/46.1 |
| C210 | 4030011600 | S.CER C1608 JB 1E 104K-T | B | 2.1/50.2 |
| C211 | 4030009550 | S.CER C1608 CH 1H 2R5B-T | T | 10.8/23.2 |
| C212 | 4030006940 | S.CER C1608 CH 1H 030C-T | T | 4.7/28.9 |
| C213 | 4550007320 | S.TAN F930J226MAABMA | T | 111.2/63.3 |
| C214 | 4550007320 | S.TAN F930J226MAABMA | B | 117.7/65.4 |
| C215 | 4030011600 | S.CER C1608 JB 1E 104K-T | T | 119.9/66.4 |
| C216 | 4030017490 | S.CER C1608 JB 1A 105K-T | T | 112.9/66.4 |
| C301 | 4030007040 | S.CER C1608 CH 1H 180J-T | T | 18.8/70.5 |
| C302 | 4030006880 | S.CER C1608 JB 1H 472K-T | T | 23.7/71.1 |
| C303 | 4030006880 | S.CER C1608 JB 1H 472K-T | T | 19.9/63.4 |
| C304 | 4030006880 | S.CER C1608 JB 1H 472K-T | T | 22.9/63.4 |
| C401 | 4030008850 | S.CER C1608 JB 1H 123K-T | T | 11.1/86.7 |
| C403 | 4030018610 | S.CER C1608 CH 1H 182J-T | B | 15.6/87.5 |
| C404 | 4030018580 | S.CER C1608 CH 1H 821J-T | T | 20.9/89.2 |
| C405 | 4030007140 | S.CER C1608 CH 1H 121J-T | T | 20.9/87.9 |
| C406 | 4030017840 | S.CER C2012 CH 1H 222J-T | B | 22.6/86.7 |
| C407 | 4030017840 | S.CER C2012 CH 1H 222J-T | B | 22.6/88.7 |
| C408 | 4030007010 | S.CER C1608 CH 1H 100D-T | T | 21.6/90.5 |
| C409 | 4030007140 | S.CER C1608 CH 1H 121J-T | T | 21.6/91.8 |
| C410 | 4030011600 | S.CER C1608 JB 1E 104K-T | T | 17.7/92.1 |
| C411 | 4030011600 | S.CER C1608 JB 1E 104K-T | T | 13.4/85.2 |
| C420 | 4030011600 | S.CER C1608 JB 1E 104K-T | T | 8.5/89.3 |
| C421 | 4030006920 | S.CER C1608 CH 1H 010C-T | T | 11.1/89.3 |
| C422 | 4030006920 | S.CER C1608 CH 1H 010C-T | T | 31.6/87.2 |
| C423 | 4030011600 | S.CER C1608 JB 1E 104K-T | T | 29/92.1 |
| C424 | 4030011600 | S.CER C1608 JB 1E 104K-T | T | 24.7/85.2 |
| C425 | 4030011600 | S.CER C1608 JB 1E 104K-T | T | 40.2/95.4 |
| C426 | 4030006900 | S.CER C1608 JB 1H 103K-T | T | 47.4/89.7 |
| C427 | 4030011600 | S.CER C1608 JB 1E 104K-T | T | 35.9/81 |
| C428 | 4510008550 | S.ELE EEE1HA010SR | T | 38/92.2 |
| C429 | 4030011600 | S.CER C1608 JB 1E 104K-T | T | 47.4/85.4 |
| C431 | 4030006900 | S.CER C1608 JB 1H 103K-T | T | 38.5/77.2 |
| C432 | 4030011600 | S.CER C1608 JB 1E 104K-T | T | 41.4/73.9 |
| C433 | 4510008540 | S.ELE EEE1CA100SR | T | 31.4/73.2 |
| C434 | 4030011600 | S.CER C1608 JB 1E 104K-T | T | 40.5/88.5 |
| C501 | 4030011600 | S.CER C1608 JB 1E 104K-T | T | 52.5/73 |
| C502 | 4510008540 | S.ELE EEE1CA100SR | T | 52.2/68.5 |
| C503 | 4510008540 | S.ELE EEE1CA100SR | T | 59.3/70.5 |
| C504 | 4030011600 | S.CER C1608 JB 1E 104K-T | T | 62/78.6 |
| C505 | 4510008540 | S.ELE EEE1CA100SR | T | 59.5/64.5 |
| C506 | 4030011600 | S.CER C1608 JB 1E 104K-T | T | 61.6/81.8 |
| C507 | 4510008580 | S.ELE EEE0JA470SR | T | 51/87.4 |
| C508 | 4030017490 | S.CER C1608 JB 1A 105K-T | T | 49.3/82.9 |
| C509 | 4030011600 | S.CER C1608 JB 1E 104K-T | T | 59.6/87.9 |
| C521 | 4510009280 | S.ELE EEE1EA4R7SR | T | 59.6/93.9 |
| C522 | 4030011600 | S.CER C1608 JB 1E 104K-T | T | 55.5/92.2 |
| C523 | 4510008550 | S.ELE EEE1HA010SR | T | 51.1/93.9 |
| C524 | 4030011600 | S.CER C1608 JB 1E 104K-T | T | 55.2/97 |
| C551 | 4550006960 | S.TAN TEESVB2 0G 107M8R | T | 99.1/64.3 |
| C601 | 4030011600 | S.CER C1608 JB 1E 104K-T | B | 99.4/93.9 |
| C602 | 4030011600 | S.CER C1608 JB 1E 104K-T | B | 98.6/67.3 |
| C603 | 4030011600 | S.CER C1608 JB 1E 104K-T | B | 100.9/91.6 |
| C604 | 4030011600 | S.CER C1608 JB 1E 104K-T | B | 101.5/68.5 |
| C605 | 4030011600 | S.CER C1608 JB 1E 104K-T | B | 93.2/85.9 |
| C606 | 4030011600 | S.CER C1608 JB 1E 104K-T | B | 93.8/84.5 |
| C607 | 4030011600 | S.CER C1608 JB 1E 104K-T | B | 93/80.1 |
| C608 | 4030011600 | S.CER C1608 JB 1E 104K-T | B | 93.8/78.8 |
| C609 | 4030011600 | S.CER C1608 JB 1E 104K-T | B | 93.7/75.8 |
| C610 | 4030011600 | S.CER C1608 JB 1E 104K-T | B | 91.3/86.8 |
| C611 | 4030011600 | S.CER C1608 JB 1E 104K-T | B | 90.3/75.9 |
| C612 | 4030011600 | S.CER C1608 JB 1E 104K-T | B | 87.8/93.9 |
| C613 | 4030011600 | S.CER C1608 JB 1E 104K-T | B | 88.4/86.8 |
| C614 | 4030011600 | S.CER C1608 JB 1E 104K-T | B | 88.5/74 |
| C615 | 4030011600 | S.CER C1608 JB 1E 104K-T | B | 86.9/86 |
| C616 | 4030011600 | S.CER C1608 JB 1E 104K-T | B | 87.1/75.9 |
| C617 | 4030011600 | S.CER C1608 JB 1E 104K-T | T | 87.9/67 |
| C618 | 4030011600 | S.CER C1608 JB 1E 104K-T | B | 83.9/86 |
| C619 | 4030011600 | S.CER C1608 JB 1E 104K-T | B | 83.5/75.7 |
| C620 | 4030011600 | S.CER C1608 JB 1E 104K-T | B | 81.1/86 |
| C621 | 4030011600 | S.CER C1608 JB 1E 104K-T | B | 81.9/83.6 |
| C622 | 4030011600 | S.CER C1608 JB 1E 104K-T | B | 81.9/81.9 |
| C623 | 4030011600 | S.CER C1608 JB 1E 104K-T | B | 81/77.2 |
| C624 | 4030011600 | S.CER C1608 JB 1E 104K-T | B | 81/74.5 |
| C625 | 4030011600 | S.CER C1608 JB 1E 104K-T | B | 74.5/91.6 |
| C626 | 4030011600 | S.CER C1608 JB 1E 104K-T | B | 74.5/77.2 |
| C627 | 4030011600 | S.CER C1608 JB 1E 104K-T | B | 78.3/67.4 |
| C628 | 4030011600 | S.CER C1608 JB 1E 104K-T | B | 75.5/93.8 |
| C629 | 4030011600 | S.CER C1608 JB 1E 104K-T | B | 73.8/69.4 |
| C630 | 4030011600 | S.CER C1608 JB 1E 104K-T | T | 74/76.5 |
| C631 | 4030011600 | S.CER C1608 JB 1E 104K-T | T | 74/80.8 |
| C632 | 4030011600 | S.CER C1608 JB 1E 104K-T | T | 73.9/73.2 |
| C633 | 4030011600 | S.CER C1608 JB 1E 104K-T | T | 102.8/90.4 |
| C634 | 4030011600 | S.CER C1608 JB 1E 104K-T | T | 102.9/76.2 |
| C635 | 4030011600 | S.CER C1608 JB 1E 104K-T | B | 101.2/83.5 |
| C636 | 4030011600 | S.CER C1608 JB 1E 104K-T | B | 101.2/80.3 |
| C637 | 4030011600 | S.CER C1608 JB 1E 104K-T | B | 101.4/72 |
| C638 | 4030011600 | S.CER C1608 JB 1E 104K-T | B | 96/93.9 |
| C639 | 4030011600 | S.CER C1608 JB 1E 104K-T | T | 104/87.3 |
| C640 | 4030011600 | S.CER C1608 JB 1E 104K-T | B | 93/82.8 |
| C641 | 4030011600 | S.CER C1608 JB 1E 104K-T | B | 93.8/87.5 |
| C642 | 4030011600 | S.CER C1608 JB 1E 104K-T | B | 93.8/81.4 |
| C643 | 4030011600 | S.CER C1608 JB 1E 104K-T | B | 93/77.2 |
| C644 | 4030011600 | S.CER C1608 JB 1E 104K-T | B | 93/74.5 |
| C645 | 4030011600 | S.CER C1608 JB 1E 104K-T | B | 94.8/67.4 |
| C646 | 4030011600 | S.CER C1608 JB 1E 104K-T | B | 92.8/93.9 |
| C647 | 4030011600 | S.CER C1608 JB 1E 104K-T | T | 94.3/67 |
| C648 | 4030011600 | S.CER C1608 JB 1E 104K-T | B | 89.7/86 |
| C649 | 4030011600 | S.CER C1608 JB 1E 104K-T | B | 85.4/67.5 |
| C650 | 4030011600 | S.CER C1608 JB 1E 104K-T | B | 85.5/86.7 |
| C651 | 4030011600 | S.CER C1608 JB 1E 104K-T | B | 85.4/74 |

## [SCOPE UNIT]

| REF NO. | ORDER NO. | DESCRIPTION | M. | H/V LOCATION |
|---|---|---|---|---|
| C652 | 4030011600 | S.CER C1608 JB 1E 104K-T | B | 79.4/93.8 |
| C653 | 4030011600 | S.CER C1608 JB 1E 104K-T | B | 82.5/86.8 |
| C654 | 4030011600 | S.CER C1608 JB 1E 104K-T | T | 78.7/66.9 |
| C655 | 4030011600 | S.CER C1608 JB 1E 104K-T | B | 81.9/79.9 |
| C656 | 4030011600 | S.CER C1608 JB 1E 104K-T | B | 74.5/84.6 |
| C657 | 4030011600 | S.CER C1608 JB 1E 104K-T | B | 74.5/80.3 |
| C658 | 4030011600 | S.CER C1608 JB 1E 104K-T | B | 74.6/71.4 |
| C659 | 4030011600 | S.CER C1608 JB 1E 104K-T | B | 74.5/88.1 |
| C660 | 4510008540 | S.ELE EEE1CA100SR | T | 67.6/75 |
| C661 | 4030011600 | S.CER C1608 JB 1E 104K-T | B | 72.8/74.7 |
| C662 | 4030011600 | S.CER C1608 JB 1E 104K-T | T | 88.3/95.9 |
| C663 | 4030011600 | S.CER C1608 JB 1E 104K-T | T | 68.8/70.3 |
| C664 | 4030011600 | S.CER C1608 JB 1E 104K-T | T | 66.2/67.6 |
| C665 | 4030011600 | S.CER C1608 JB 1E 104K-T | B | 67.5/76.8 |
| C666 | 4550007310 | S.TAN F930J227MNMBMA | B | 108.6/73.9 |
| C667 | 4550007310 | S.TAN F930J227MNMBMA | B | 108.6/68.6 |
| C671 | 4030011600 | S.CER C1608 JB 1E 104K-T | T | 114.2/70.1 |
| C672 | 4030006880 | S.CER C1608 JB 1H 472K-T | T | 72.9/64.4 |
| C701 | 4030011600 | S.CER C1608 JB 1E 104K-T | T | 76/57 |
| C702 | 4030011600 | S.CER C1608 JB 1E 104K-T | T | 72.7/53.6 |
| C703 | 4030011600 | S.CER C1608 JB 1E 104K-T | T | 74.6/57 |
| C720 | 4030006880 | S.CER C1608 JB 1H 472K-T | T | 82.9/38.1 |
| C721 | 4030011600 | S.CER C1608 JB 1E 104K-T | T | 83.2/40.2 |
| C722 | 4510008540 | S.ELE EEE1CA100SR | T | 82.6/44.1 |
| C723 | 4030006880 | S.CER C1608 JB 1H 472K-T | T | 109.9/37.4 |
| C724 | 4030011600 | S.CER C1608 JB 1E 104K-T | T | 109.9/38.9 |
| C725 | 4510008540 | S.ELE EEE1CA100SR | T | 110.1/33.2 |
| C726 | 4030006880 | S.CER C1608 JB 1H 472K-T | T | 108.6/45.9 |
| C727 | 4030006880 | S.CER C1608 JB 1H 472K-T | T | 105.6/45.3 |
| C730 | 4030011600 | S.CER C1608 JB 1E 104K-T | T | 84.2/35.3 |
| C731 | 4030011600 | S.CER C1608 JB 1E 104K-T | T | 84.2/38.1 |
| C733 | 4030011600 | S.CER C1608 JB 1E 104K-T | T | 93.4/26.3 |
| C734 | 4030011600 | S.CER C1608 JB 1E 104K-T | T | 103.1/29.9 |
| C736 | 4030011600 | S.CER C1608 JB 1E 104K-T | T | 96.8/44.8 |
| C737 | 4030011600 | S.CER C1608 JB 1E 104K-T | T | 103/40.9 |
| C738 | 4030011600 | S.CER C1608 JB 1E 104K-T | T | 96.5/26.3 |
| C739 | 4030011600 | S.CER C1608 JB 1E 104K-T | T | 99.6/26.3 |
| C740 | 4030011600 | S.CER C1608 JB 1E 104K-T | T | 103.1/37.4 |
| C741 | 4030011600 | S.CER C1608 JB 1E 104K-T | T | 92.6/45.1 |
| C742 | 4030011600 | S.CER C1608 JB 1E 104K-T | T | 90/45.1 |
| C750 | 4030006900 | S.CER C1608 JB 1H 103K-T | T | 103.2/34.5 |
| C751 | 4030006900 | S.CER C1608 JB 1H 103K-T | T | 105.1/37.3 |
| C760 | 4030006880 | S.CER C1608 JB 1H 472K-T | T | 110.9/20.8 |
| C761 | 4030007150 | S.CER C1608 CH 1H 151J-T | T | 110.1/22.8 |
| C762 | 4030007110 | S.CER C1608 CH 1H 680J-T | T | 108.4/21.6 |
| C763 | 4030011280 | S.CER C1608 CH 1H 271J-T | T | 106/25.1 |
| C764 | 4030007080 | S.CER C1608 CH 1H 390J-T | T | 103.4/20.8 |
| C765 | 4030011830 | S.CER C1608 CH 1H 301J-T | T | 100/24.3 |
| C766 | 4030007020 | S.CER C1608 CH 1H 120J-T | T | 100/21.7 |
| C767 | 4030007170 | S.CER C1608 CH 1H 221J-T | T | 95.7/24.3 |
| C768 | 4030011280 | S.CER C1608 CH 1H 271J-T | T | 93.5/20.4 |
| C769 | 4030006860 | S.CER C1608 JB 1H 102K-T | T | 91.4/21.3 |
| C770 | 4030011280 | S.CER C1608 CH 1H 271J-T | T | 89.3/20.5 |
| C801 | 4030006880 | S.CER C1608 JB 1H 472K-T | T | 66.2/40 |
| C802 | 4510008540 | S.ELE EEE1CA100SR | T | 69/44.8 |
| C803 | 4030006900 | S.CER C1608 JB 1H 103K-T | T | 60.4/37.1 |
| C805 | 4550007660 | S.TAN F931E105MAABMA | T | 58.5/38.7 |
| C806 | 4340000240 | S.MLR ECHU 1C 682JX5 | T | 64.2/43.3 |
| C807 | 4030006880 | S.CER C1608 JB 1H 472K-T | T | 69.6/33.3 |
| C808 | 4030006880 | S.CER C1608 JB 1H 472K-T | B | 62.7/32 |
| C809 | 4510008540 | S.ELE EEE1CA100SR | T | 64.9/25.7 |
| C810 | 4030006880 | S.CER C1608 JB 1H 472K-T | T | 73.8/42.8 |
| C811 | 4030006880 | S.CER C1608 JB 1H 472K-T | T | 73.3/32.9 |
| C812 | 4030006880 | S.CER C1608 JB 1H 472K-T | T | 73.8/30.9 |
| C813 | 4030011600 | S.CER C1608 JB 1E 104K-T | T | 65.9/31.8 |
| C821 | 4030007060 | S.CER C1608 CH 1H 270J-T | T | 57.8/46.5 |
| C822 | 4030007100 | S.CER C1608 CH 1H 560J-T | T | 54.4/45.7 |
| C823 | 4030006960 | S.CER C1608 CH 1H 050C-T | T | 55.7/45.7 |
| C824 | 4610001850 | S.TRI TZB4R200AB10R00 | T | 50.6/44.7 |
| C825 | 4030007130 | S.CER C1608 CH 1H 101J-T | T | 46.9/46.8 |
| C826 | 4030007060 | S.CER C1608 CH 1H 270J-T | T | 40.9/45.9 |
| C827 | 4030007020 | S.CER C1608 CH 1H 120J-T | T | 45.5/44.6 |
| C828 | 4030006880 | S.CER C1608 JB 1H 472K-T | T | 43.5/43.1 |
| C829 | 4030009500 | S.CER C1608 CH 1H 0R5B-T | T | 37.9/42.9 |
| C830 | 4030006860 | S.CER C1608 JB 1H 102K-T | T | 47.9/52.8 |
| C831 | 4030006880 | S.CER C1608 JB 1H 472K-T | T | 46.4/52.8 |
| C832 | 4510008500 | S.ELE EEE1CA101WP | T | 49.3/57.6 |
| C833 | 4510008540 | S.ELE EEE1CA100SR | T | 40.3/58 |
| C842 | 4030006880 | S.CER C1608 JB 1H 472K-T | T | 39.4/35 |
| C843 | 4030006860 | S.CER C1608 JB 1H 102K-T | T | 23.8/34.3 |
| C844 | 4030006880 | S.CER C1608 JB 1H 472K-T | T | 24.5/32.4 |
| C845 | 4510008520 | S.ELE EEE1CA470SP | T | 17.7/35.3 |
| C846 | 4030006880 | S.CER C1608 JB 1H 472K-T | T | 38.4/31.3 |
| C847 | 4030006880 | S.CER C1608 JB 1H 472K-T | T | 30.3/36.1 |
| C848 | 4030006880 | S.CER C1608 JB 1H 472K-T | T | 30.3/38.3 |
| C849 | 4030006880 | S.CER C1608 JB 1H 472K-T | T | 27/40 |
| C850 | 4030006880 | S.CER C1608 JB 1H 472K-T | T | 30.3/39.7 |
| C851 | 4030006880 | S.CER C1608 JB 1H 472K-T | T | 25.1/42.3 |
| C852 | 4030007120 | S.CER C1608 CH 1H 820J-T | T | 30/44.2 |
| C853 | 4030007070 | S.CER C1608 CH 1H 330J-T | T | 24.4/46.8 |
| C854 | 4030007140 | S.CER C1608 CH 1H 121J-T | T | 30/45.8 |
| C855 | 4030007020 | S.CER C1608 CH 1H 120J-T | T | 30.1/48.1 |
| C856 | 4030007090 | S.CER C1608 CH 1H 470J-T | T | 30.2/50.4 |
| C862 | 4030006880 | S.CER C1608 JB 1H 472K-T | T | 60.4/34.5 |
| C911 | 4030008680 | S.CER C2012 JF 1C 105Z-T | T | 92.4/112.7 |
| C912 | 4030008680 | S.CER C2012 JF 1C 105Z-T | T | 92.4/109 |
| C913 | 4030008680 | S.CER C2012 JF 1C 105Z-T | T | 92.4/105.5 |
| C914 | 4030008680 | S.CER C2012 JF 1C 105Z-T | T | 96.8/115.2 |
| C915 | 4030008680 | S.CER C2012 JF 1C 105Z-T | T | 101.5/114.1 |
| C916 | 4030011600 | S.CER C1608 JB 1E 104K-T | T | 108.7/116.4 |
| C917 | 4030011600 | S.CER C1608 JB 1E 104K-T | B | 108.2/115.9 |
| C918 | 4030011600 | S.CER C1608 JB 1E 104K-T | B | 91.3/112.6 |

M.=Mounted side (T: Mounted on the Top side, B: Mounted on the Bottom side)
S.=Surface mount

## [SCOPE UNIT]

| REF NO. | ORDER NO. | DESCRIPTION | | M. | H/V LOCATION |
|---|---|---|---|---|---|
| J1 | 6510007020 | CNR | TMP-J01X-V6 | | |
| J2 | 6510007020 | CNR | TMP-J01X-V6 | | |
| J3 | 6510007020 | CNR | TMP-J01X-V6 | | |
| J4 | 6510020001 | S.CNR | 52808-3071 (3090) | T | 127.9/41.5 |
| J11 | 6510007020 | CNR | TMP-J01X-V6 | | |
| J901 | 6510023720 | CNR | LGY6501-0600C | | |
| J902 | 6510023120 | CNR | CD6109SA1J0 <CVI> | | |
| J903 | 6510024040 | CNR | TM11R-5M2-88-LP | | |
| J904 | 6510024032 | CNR | UBA-4R-D10T-4D (LF) (SN) | | |
| J905 | 6450001941 | CNR | KEY-15S-2A3A (LF) (SN) | | |
| J906 | 6510019971 | S.CNR | 52808-1071 | T | 129/97.7 |
| J907 | 6510020251 | S.CNR | B9B-PH-SM4-TB (LF) (SN) | T | 50.7/105.2 |
| J908 | 6510022311 | S.CNR | B5B-PH-SM4-TB (LF) (SN) | T | 88.7/110.1 |
| J909 | 6510003471 | CNR | B11B-EH-S (LF) (SN) | | |
| J910 | 6510019421 | S.CNR | B8B-ZR-SM4-TF (LF) (SN) | T | 109.6/104.7 |
| DS901 | 5040002930 | S.LED | SML-512MW T86 | T | 57.1/115.2 |
| DS902 | 5040002930 | S.LED | SML-512MW T86 | T | 46/115.1 |
| EP901 | 6910012350 | S.BEA | MMZ1608Y 102BT | B | 131.1/119.6 |
| EP902 | 6910012350 | S.BEA | MMZ1608Y 102BT | B | 122.5/122.7 |
| EP903 | 6910012350 | S.BEA | MMZ1608Y 102BT | T | 81.3/114.1 |
| EP904 | 6910012350 | S.BEA | MMZ1608Y 102BT | T | 82.6/114.1 |
| EP905 | 6910012350 | S.BEA | MMZ1608Y 102BT | B | 79.7/113.7 |
| EP906 | 6910012350 | S.BEA | MMZ1608Y 102BT | T | 81.9/110.1 |
| EP907 | 6910012350 | S.BEA | MMZ1608Y 102BT | B | 83.8/111.5 |
| EP908 | 6910012350 | S.BEA | MMZ1608Y 102BT | B | 85.1/111.5 |

## [LOGIC UNIT]

| REF NO. | ORDER NO. | DESCRIPTION | | M. | H/V LOCATION |
|---|---|---|---|---|---|
| IC1 | 1130014630 | S.IC | MT48LC16M16A2P IT | B | 59.3/91.9 |
| IC2 | 1130014630 | S.IC | MT48LC16M16A2P IT | T | 59.3/99 |
| IC51 | 1130011591 | S.IC | IDT70V24L15PFG | B | 95.5/56 |
| IC52 | 1140009781 | S.IC | XC9572XL-10TQG100C | B | 116.5/56 |
| IC53 | 1110005821 | S.IC | R3112N281A-TR-F | T | 142.2/100.9 |
| IC54 | 1130007431 | S.IC | TC7S14FU (TE85R,F) | T | 146.5/100.6 |
| IC55 | 1130008041 | S.IC | TC7SH04FU (TE85L,JF) | T | 97.9/34.4 |
| IC56 | 1130010111 | S.IC | TC7WH04FU (TE12L,F) | B | 35/25.1 |
| IC101 | 1130011010 | S.IC | SN74CBTLV3257PWR <ACE> | T | 25.2/75.3 |
| IC102 | 1130006441 | S.IC | TC7S08F (TE85R,F) | T | 62/39 |
| IC103 | 1140011561 | S.IC | HD6417751RBP200V | T | 53.5/64.9 |
| IC104 | 1130008361 | S.IC | TC7SHU04FU (TE85L,JF) | T | 8.1/60.8 |
| IC105 | 1130012241 | S.IC | CY2292FXC (SX-2590J) | T | 12.6/69 |
| IC106 | 1130011110 | S.IC | TC74VCX04FT (EL) | T | 10/77.1 |
| IC201 | 1130014630 | S.IC | MT48LC16M16A2P IT | B | 128/77.3 |
| IC202 | 1130014630 | S.IC | MT48LC16M16A2P IT | B | 128.1/95.5 |
| IC203 | 1140011571 | S.IC | HD64404BTDV | T | 97.4/78.4 |
| IC204 | 1140011581 | S.IC | ADV7123KSTZ50 | T | 207.1/29.6 |
| IC205 | 1130011941 | S.IC | TC7SZ04F (TE85L,F) | T | 195.9/26.4 |
| IC206 | 1130012150 | S.IC | SN74ACT04PWR | T | 196/19.9 |
| IC207 | 1130005721 | S.IC | TC7W04F (TE12L,F) | B | 212.2/38.2 |
| IC208 | 1130014080 | S.IC | BD6517F-E2 | B | 219.1/39.2 |
| IC209 | 1190001920 | S.IC | AK5355-VT-E2 | B | 109.8/22.9 |
| IC210 | 1190001920 | S.IC | AK5355-VT-E2 | B | 120.7/22.9 |
| IC211 | 1190001910 | S.IC | AK4384-VT-E2 | B | 131.3/32.6 |
| IC212 | 1190001910 | S.IC | AK4384-VT-E2 | B | 119.1/33.4 |
| IC401 | 1130010970 | S.IC | PCI1410APGE | B | 23.5/48.5 |
| IC402 | 1130011960 | S.IC | TPS2211AIDBR | B | 21.8/31.2 |
| IC403 | 1130009570 | S.IC | BR93LC46F-WE2 | T | 24.2/67.3 |
| IC404 | 1130010990 | S.IC | RTL8139C | B | 23/76.5 |
| IC601 | 1130008041 | S.IC | TC7SH04FU (TE85L,JF) | B | 169.3/55.8 |
| IC602 | 1130008711 | S.IC | TC7SET04FU (T5L,JF) | B | 169.3/53.3 |
| IC603 | 1110004770 | S.IC | BU9480F-E2 | T | 176/57 |
| IC604 | 1140011590 | S.IC | HD64F2377VFQ33V | B | 87/30.5 |
| IC605 | 1140009781 | S.IC | XC9572XL-10TQG100C | B | 141/57 |
| IC607 | 1130006441 | S.IC | TC7S08F (TE85R,F) | B | 59.6/22.6 |
| IC608 | 1130006441 | S.IC | TC7S08F (TE85R,F) | B | 63.3/22.6 |
| IC609 | 1130005252 | S.IC | TC74HC08AF (EL,F) | B | 60/29.8 |
| IC610 | 1140008650 | S.IC | HN58X2464TI | B | 54/37.4 |
| IC801 | 1180002020 | S.REG | BA033FP-E2 | B | 144.2/112.5 |
| IC802 | 1180001541 | S.IC | TA78L08F (TE12L,F) | T | 131.1/111.6 |
| IC821 | 1110002700 | S.IC | NJM2904M-TE1-#FMZB | B | 16.9/105 |
| IC851 | 1110003870 | S.IC | NJM2058M-TE1 | B | 186.3/56.1 |
| IC852 | 1110003870 | S.IC | NJM2058M-TE1 | B | 135.5/12.6 |
| IC853 | 1110003870 | S.IC | NJM2058M-TE1 | B | 114.5/10.1 |
| IC854 | 1130005721 | S.IC | TC7W04F (TE12L,F) | B | 161.4/40.6 |
| Q601 | 1530002060 | S.TR | 2SC4081 T106 R | B | 173.3/53.3 |
| Q602 | 1510000510 | S.TR | 2SA1576A T106R | B | 173.2/57.2 |
| Q802 | 1530002060 | S.TR | 2SC4081 T106 R | T | 159.1/70.3 |
| Q803 | 1540000441 | S.TR | 2SD1619T-TD-E | B | 160.1/70.9 |
| Q804 | 1540000441 | S.TR | 2SD1619T-TD-E | B | 166.7/70.8 |
| Q805 | 1530002060 | S.TR | 2SC4081 T106 R | T | 165.7/70.3 |
| Q806 | 1540000441 | S.TR | 2SD1619T-TD-E | B | 173.3/70.8 |
| Q807 | 1530002060 | S.TR | 2SC4081 T106 R | T | 172.3/70.3 |
| Q808 | 1590001330 | S.TR | DTA114EUA T106 | B | 157.7/30.1 |
| Q809 | 1590001330 | S.TR | DTA114EUA T106 | B | 157.7/27.5 |
| Q810 | 1540000550 | S.TR | 2SD1664 T100Q | T | 160.2/78 |
| Q821 | 1520000651 | S.TR | 2SB1201S-TL-E | B | 28.9/108.4 |
| Q822 | 1530002060 | S.TR | 2SC4081 T106 R | B | 25.5/103.6 |
| Q901 | 1590001960 | S.TR | XP4311 (TX) | B | 187.9/88.3 |
| Q902 | 1590001960 | S.TR | XP4311 (TX) | B | 188.9/79.7 |
| Q903 | 1590001960 | S.TR | XP4311 (TX) | B | 193.9/88.3 |
| Q904 | 1590001960 | S.TR | XP4311 (TX) | B | 192.9/79.7 |
| D51 | 1750000550 | S.DIO | 1SS355 TE-17 | T | 126.1/48.7 |
| D52 | 1750000550 | S.DIO | 1SS355 TE-17 | T | 126.1/50.5 |
| D53 | 1750000550 | S.DIO | 1SS355 TE-17 | T | 126.1/52.3 |
| D54 | 1750000550 | S.DIO | 1SS355 TE-17 | T | 126.1/54.1 |
| D55 | 1750000550 | S.DIO | 1SS355 TE-17 | T | 124.7/55.9 |
| D56 | 1750000550 | S.DIO | 1SS355 TE-17 | T | 124.7/57.7 |
| D57 | 1750000550 | S.DIO | 1SS355 TE-17 | T | 124.7/59.5 |
| D58 | 1750000550 | S.DIO | 1SS355 TE-17 | T | 124.7/61.3 |
| D59 | 1750000550 | S.DIO | 1SS355 TE-17 | T | 124.7/63.1 |
| D60 | 1750000550 | S.DIO | 1SS355 TE-17 | T | 130.1/48.7 |
| D61 | 1750000550 | S.DIO | 1SS355 TE-17 | T | 130.1/50.5 |
| D62 | 1750000550 | S.DIO | 1SS355 TE-17 | T | 130.1/52.3 |
| D65 | 1750000550 | S.DIO | 1SS355 TE-17 | T | 128.9/57.7 |
| D66 | 1750000550 | S.DIO | 1SS355 TE-17 | T | 128.9/59.5 |
| D67 | 1750000550 | S.DIO | 1SS355 TE-17 | T | 128.9/61.3 |
| D68 | 1750000550 | S.DIO | 1SS355 TE-17 | T | 128.9/63.1 |
| D201 | 1790000980 | S.DIO | MA742 (TX) | B | 214.6/32.4 |
| D202 | 1790000980 | S.DIO | MA742 (TX) | B | 214.6/29.4 |
| D203 | 1790000980 | S.DIO | MA742 (TX) | B | 214.6/26.4 |
| D204 | 1790000980 | S.DIO | MA742 (TX) | T | 201.5/16.9 |
| D205 | 1790000980 | S.DIO | MA742 (TX) | T | 201.5/19.8 |
| D206 | 1790000980 | S.DIO | MA742 (TX) | B | 218/7.4 |
| D207 | 1790000980 | S.DIO | MA742 (TX) | B | 220.9/7.4 |
| D208 | 1790000980 | S.DIO | MA742 (TX) | B | 228/7.4 |
| D209 | 1790000980 | S.DIO | MA742 (TX) | B | 230.8/7.4 |
| D601 | 1750000550 | S.DIO | 1SS355 TE-17 | B | 175.5/52.5 |
| D801 | 1750000370 | S.DIO | DA221 TL | B | 159.1/66.5 |
| D802 | 1750000370 | S.DIO | DA221 TL | B | 165.7/66.5 |
| D803 | 1750000370 | S.DIO | DA221 TL | B | 172.3/66.5 |
| D804 | 1750000271 | S.DIO | 1SS301 (TE85L,F) | B | 170/64.1 |
| D805 | 1790001611 | S.DIO | 1SS385 (TE85L,F) | B | 157.3/38.2 |
| D806 | 1790001611 | S.DIO | 1SS385 (TE85L,F) | B | 157.3/40.3 |
| D821 | 1730002340 | S.ZEN | MA8047-M (TX) | B | 22.4/104.6 |
| D851 | 1750000550 | S.DIO | 1SS355 TE-17 | B | 180.9/50.2 |
| D852 | 1750000550 | S.DIO | 1SS355 TE-17 | B | 191.8/50 |
| D853 | 1790000980 | S.DIO | MA742 (TX) | B | 122/18.5 |
| D854 | 1790000980 | S.DIO | MA742 (TX) | B | 119.5/18.5 |

M.=Mounted side (T: Mounted on the Top side, B: Mounted on the Bottom side)
S.=Surface mount

## [LOGIC UNIT]

| REF NO. | ORDER NO. | DESCRIPTION | | M. | H/V LOCATION |
|---|---|---|---|---|---|
| D855 | 1790000980 | S.DIO | MA742 (TX) | B | 107/18.4 |
| D856 | 1790000980 | S.DIO | MA742 (TX) | B | 104.5/18.4 |
| D857 | 1750000550 | S.DIO | 1SS355 TE-17 | B | 189.9/61.9 |
| D858 | 1750000550 | S.DIO | 1SS355 TE-17 | B | 182.2/61.9 |
| D860 | 1790000980 | S.DIO | MA742 (TX) | T | 97.5/26.3 |
| D861 | 1790000980 | S.DIO | MA742 (TX) | T | 97.5/31.3 |
| D862 | 1790000980 | S.DIO | MA742 (TX) | T | 97.9/23.7 |
| D863 | 1790000980 | S.DIO | MA742 (TX) | T | 97.5/28.8 |
| D864 | 1790000980 | S.DIO | MA742 (TX) | T | 100.4/23.7 |
| D865 | 1790000980 | S.DIO | MA742 (TX) | T | 94.3/24.7 |
| D866 | 1790000980 | S.DIO | MA742 (TX) | T | 94.3/27.2 |
| D867 | 1790000980 | S.DIO | MA742 (TX) | T | 102.9/23.7 |
| D901 | 1790000980 | S.DIO | MA742 (TX) | T | 188/31.2 |
| X101 | 6050011610 | S.XTL | CR-751 (25.000 MHz) | T | 2.9/63.1 |
| X201 | 6050010680 | S.XTL | CR-628 (24.576 MHz) | T | 103.9/94.6 |
| X202 | 6050011910 | S.XTL | CR-780 (48 MHz) | T | 100.2/60.6 |
| X601 | 6050011810 | S.XTL | CR-755 (15.9744 MHz) | T | 81.9/13.6 |
| L203 | 6200002631 | S.COL | NLV25T-R10J | B | 222.2/32.6 |
| L204 | 6200002631 | S.COL | NLV25T-R10J | B | 222.2/29.6 |
| L205 | 6200002631 | S.COL | NLV25T-R10J | B | 222.2/26.6 |
| L801 | 6200003261 | S.COL | NLV32T-101J | B | 66.9/123.5 |
| L803 | 6180003321 | S.COL | SLF6028T-150M1R0-PF | B | 88.7/112.9 |
| L804 | 6180003321 | S.COL | SLF6028T-150M1R0-PF | B | 102.5/112.9 |
| L805 | 6180003321 | S.COL | SLF6028T-150M1R0-PF | B | 95.8/112.9 |
| L806 | 6180003321 | S.COL | SLF6028T-150M1R0-PF | B | 109/112.9 |
| L807 | 6180003321 | S.COL | SLF6028T-150M1R0-PF | B | 115.7/112.9 |
| L808 | 6200003590 | S.COL | EXCCL3225U1 | T | 92.1/115.8 |
| L809 | 6200003590 | S.COL | EXCCL3225U1 | B | 93.1/123.1 |
| L810 | 6200003590 | S.COL | EXCCL3225U1 | B | 87.7/123.2 |
| L811 | 6200001831 | S.COL | NLV32T-100J | B | 127.9/22.6 |
| L821 | 6200003590 | S.COL | EXCCL3225U1 | B | 121.2/112.7 |
| L822 | 6200003590 | S.COL | EXCCL3225U1 | T | 125/115.8 |
| L823 | 6200009790 | S.COL | BLM31PG121SN1 | T | 18.2/25.6 |
| L824 | 6200003590 | S.COL | EXCCL3225U1 | B | 130.1/115.5 |
| L825 | 6200003590 | S.COL | EXCCL3225U1 | B | 133.6/116.1 |
| L826 | 6180003321 | S.COL | SLF6028T-150M1R0-PF | B | 179.9/15.5 |
| L827 | 6200003590 | S.COL | EXCCL3225U1 | T | 120.4/115.8 |
| L832 | 6200003590 | S.COL | EXCCL3225U1 | B | 80.1/122.1 |
| L833 | 6200003590 | S.COL | EXCCL3225U1 | B | 75.6/122.1 |
| L834 | 6200003590 | S.COL | EXCCL3225U1 | B | 125.6/112.2 |
| L835 | 6200003590 | S.COL | EXCCL3225U1 | B | 125.6/115.3 |
| L901 | 6200003590 | S.COL | EXCCL3225U1 | B | 214.4/74.4 |
| L902 | 6200003590 | S.COL | EXCCL3225U1 | B | 214.4/78.2 |
| L903 | 6200003590 | S.COL | EXCCL3225U1 | B | 206.5/80 |
| L904 | 6200003590 | S.COL | EXCCL3225U1 | B | 214.4/81.2 |
| L905 | 6200003590 | S.COL | EXCCL3225U1 | B | 21/114.8 |
| L906 | 6200003590 | S.COL | EXCCL3225U1 | B | 24/114.8 |
| L907 | 6200003590 | S.COL | EXCCL3225U1 | B | 27/114.8 |
| L908 | 6200003590 | S.COL | EXCCL3225U1 | B | 30/114.8 |
| L909 | 6200003261 | S.COL | NLV32T-101J | B | 181.3/82.6 |
| L910 | 6200003590 | S.COL | EXCCL3225U1 | B | 195.7/82.4 |
| L911 | 6200003590 | S.COL | EXCCL3225U1 | B | 221.8/76.5 |
| L912 | 6200003590 | S.COL | EXCCL3225U1 | B | 230.4/76.8 |
| L913 | 6200003590 | S.COL | EXCCL3225U1 | B | 230.4/63 |
| L914 | 6200003590 | S.COL | EXCCL3225U1 | B | 221.8/64 |
| L915 | 6200003590 | S.COL | EXCCL3225U1 | B | 230.4/66 |
| L916 | 6200003590 | S.COL | EXCCL3225U1 | B | 221.8/67 |
| L917 | 6200003590 | S.COL | EXCCL3225U1 | T | 162.2/21.7 |
| L918 | 6200003590 | S.COL | EXCCL3225U1 | T | 186.4/18.7 |
| L919 | 6200003590 | S.COL | EXCCL3225U1 | T | 186.4/22.4 |
| L920 | 6200003590 | S.COL | EXCCL3225U1 | T | 162.3/24.7 |
| L1101 | 6200003590 | S.COL | EXCCL3225U1 | T | 40.5/25.8 |
| R1 | 7030003520 | S.RES | ERJ3GEYJ 472 V (4.7 k) | T | 91.5/101.3 |
| R51 | 7030003520 | S.RES | ERJ3GEYJ 472 V (4.7 k) | T | 143/76.8 |
| R52 | 7030003560 | S.RES | ERJ3GEYJ 103 V (10 k) | T | 138.6/100.6 |
| R55 | 7030003440 | S.RES | ERJ3GEYJ 102 V (1 k) | B | 126.4/51.5 |
| R56 | 7030003440 | S.RES | ERJ3GEYJ 102 V (1 k) | B | 123.5/46.1 |
| R57 | 7030003680 | S.RES | ERJ3GEYJ 104 V (100 k) | B | 31.3/25 |
| R58 | 7030003680 | S.RES | ERJ3GEYJ 104 V (100 k) | B | 30/25 |
| R101 | 7030003680 | S.RES | ERJ3GEYJ 104 V (100 k) | T | 19.3/74.8 |
| R102 | 7030003520 | S.RES | ERJ3GEYJ 472 V (4.7 k) | T | 31/73.7 |
| R103 | 7030003520 | S.RES | ERJ3GEYJ 472 V (4.7 k) | T | 31/75.7 |
| R104 | 7030003520 | S.RES | ERJ3GEYJ 472 V (4.7 k) | T | 19.3/73.5 |
| R105 | 7030003520 | S.RES | ERJ3GEYJ 472 V (4.7 k) | T | 19.3/76.1 |
| R106 | 7030003560 | S.RES | ERJ3GEYJ 103 V (10 k) | B | 54.6/60.1 |
| R107 | 7030003560 | S.RES | ERJ3GEYJ 103 V (10 k) | B | 49.4/60.1 |
| R108 | 7030003560 | S.RES | ERJ3GEYJ 103 V (10 k) | B | 48.4/49.5 |
| R109 | 7030003560 | S.RES | ERJ3GEYJ 103 V (10 k) | B | 52/60.1 |
| R110 | 7030003560 | S.RES | ERJ3GEYJ 103 V (10 k) | T | 54.9/49.3 |
| R111 | 7030003560 | S.RES | ERJ3GEYJ 103 V (10 k) | B | 54.6/58.8 |
| R112 | 7030003560 | S.RES | ERJ3GEYJ 103 V (10 k) | T | 53.6/49.3 |
| R113 | 7030003560 | S.RES | ERJ3GEYJ 103 V (10 k) | B | 49.4/58.8 |
| R114 | 7030003560 | S.RES | ERJ3GEYJ 103 V (10 k) | B | 45.8/49.5 |
| R115 | 7030003560 | S.RES | ERJ3GEYJ 103 V (10 k) | B | 49.4/62.7 |
| R116 | 7030003560 | S.RES | ERJ3GEYJ 103 V (10 k) | B | 49.4/61.4 |
| R117 | 7030003260 | S.RES | ERJ3GEYJ 330 V (33) | B | 43.2/49.5 |
| R118 | 7030003560 | S.RES | ERJ3GEYJ 103 V (10 k) | B | 49.4/64 |
| R119 | 7030003560 | S.RES | ERJ3GEYJ 103 V (10 k) | B | 41.4/50 |
| R120 | 7030003560 | S.RES | ERJ3GEYJ 103 V (10 k) | B | 49.4/65.3 |
| R121 | 7030003560 | S.RES | ERJ3GEYJ 103 V (10 k) | B | 43.2/46.9 |
| R122 | 7030003560 | S.RES | ERJ3GEYJ 103 V (10 k) | B | 39.3/56 |
| R123 | 7030003560 | S.RES | ERJ3GEYJ 103 V (10 k) | B | 43.2/45.6 |
| R124 | 7030003680 | S.RES | ERJ3GEYJ 104 V (100 k) | T | 51/49.3 |
| R125 | 7030003520 | S.RES | ERJ3GEYJ 472 V (4.7 k) | T | 52.3/49.3 |
| R126 | 7030003560 | S.RES | ERJ3GEYJ 103 V (10 k) | B | 52/61.4 |
| R127 | 7030003560 | S.RES | ERJ3GEYJ 103 V (10 k) | B | 52/58.8 |
| R128 | 7030003560 | S.RES | ERJ3GEYJ 103 V (10 k) | T | 53.6/45.7 |
| R129 | 7030003560 | S.RES | ERJ3GEYJ 103 V (10 k) | T | 54.9/46.7 |

## [LOGIC UNIT]

| REF NO. | ORDER NO. | DESCRIPTION | | M. | H/V LOCATION |
|---|---|---|---|---|---|
| R130 | 7030003560 | S.RES | ERJ3GEYJ 103 V (10 k) | B | 56.4/50.5 |
| R131 | 7030003560 | S.RES | ERJ3GEYJ 103 V (10 k) | B | 54.6/61.4 |
| R132 | 7030003560 | S.RES | ERJ3GEYJ 103 V (10 k) | T | 56.2/49.3 |
| R133 | 7030003560 | S.RES | ERJ3GEYJ 103 V (10 k) | T | 56.2/46.7 |
| R134 | 7030003200 | S.RES | ERJ3GEYJ 100 V (10) | B | 57.2/58.8 |
| R135 | 7030003200 | S.RES | ERJ3GEYJ 100 V (10) | B | 57.2/60.1 |
| R136 | 7030003200 | S.RES | ERJ3GEYJ 100 V (10) | B | 70.1/50.5 |
| R137 | 7030004050 | S.RES | ERJ3GEYJ 1R0 V (1) | B | 49.4/68 |
| R138 | 7030003560 | S.RES | ERJ3GEYJ 103 V (10 k) | B | 49.4/69.3 |
| R139 | 7030003560 | S.RES | ERJ3GEYJ 103 V (10 k) | B | 49.7/78 |
| R140 | 7410000990 | S.ARY | EXB-V8V 470JV (47) | T | 47/82.7 |
| R141 | 7410000990 | S.ARY | EXB-V8V 470JV (47) | T | 43.3/82.7 |
| R142 | 7410000990 | S.ARY | EXB-V8V 470JV (47) | T | 54.4/82.7 |
| R143 | 7410000990 | S.ARY | EXB-V8V 470JV (47) | T | 61.8/82.7 |
| R144 | 7410000990 | S.ARY | EXB-V8V 470JV (47) | T | 50.7/82.7 |
| R145 | 7410000990 | S.ARY | EXB-V8V 470JV (47) | T | 58.1/82.7 |
| R146 | 7030003280 | S.RES | ERJ3GEYJ 470 V (47) | T | 70/81.8 |
| R147 | 7030003280 | S.RES | ERJ3GEYJ 470 V (47) | T | 70/80.5 |
| R148 | 7410000990 | S.ARY | EXB-V8V 470JV (47) | T | 65.5/82.7 |
| R149 | 7410000990 | S.ARY | EXB-V8V 470JV (47) | T | 70/54.9 |
| R150 | 7410000990 | S.ARY | EXB-V8V 470JV (47) | T | 70/58.6 |
| R151 | 7410000990 | S.ARY | EXB-V8V 470JV (47) | T | 70/62.3 |
| R152 | 7410000990 | S.ARY | EXB-V8V 470JV (47) | T | 70/66 |
| R153 | 7030003200 | S.RES | ERJ3GEYJ 100 V (10) | T | 70/83.1 |
| R154 | 7410000990 | S.ARY | EXB-V8V 470JV (47) | T | 70/69.7 |
| R155 | 7410000990 | S.ARY | EXB-V8V 470JV (47) | T | 70/73.4 |
| R156 | 7410000990 | S.ARY | EXB-V8V 470JV (47) | T | 70/78 |
| R157 | 7410000800 | S.ARY | EXB-V8V 103JV (10 k) | T | 77.4/38.7 |
| R158 | 7030003560 | S.RES | ERJ3GEYJ 103 V (10 k) | T | 77.4/36.2 |
| R159 | 7030003560 | S.RES | ERJ3GEYJ 103 V (10 k) | T | 64.3/41.3 |
| R161 | 7030003250 | S.RES | ERJ3GEYJ 270 V (27) | T | 9.1/64.6 |
| R162 | 7030003800 | S.RES | ERJ3GEYJ 105 V (1 M) | T | 6.2/59.5 |
| R163 | 7030003320 | S.RES | ERJ3GEYJ 101 V (100) | T | 12.5/73.7 |
| R164 | 7030003250 | S.RES | ERJ3GEYJ 270 V (27) | B | 10.8/68.3 |
| R165 | 7030003860 | S.RES | ERJ3GE JPW V | T | 4.3/76.8 |
| R166 | 7030003860 | S.RES | ERJ3GE JPW V | T | 8.5/81.2 |
| R167 | 7030003860 | S.RES | ERJ3GE JPW V | T | 14.9/78.1 |
| R170 | 7030003600 | S.RES | ERJ3GEYJ 223 V (22 k) | B | 38.5/38.6 |
| R171 | 7030003600 | S.RES | ERJ3GEYJ 223 V (22 k) | B | 35.3/75.2 |
| R172 | 7030003600 | S.RES | ERJ3GEYJ 223 V (22 k) | B | 35.3/76.5 |
| R173 | 7030003600 | S.RES | ERJ3GEYJ 223 V (22 k) | B | 39.4/78.2 |
| R174 | 7030003600 | S.RES | ERJ3GEYJ 223 V (22 k) | B | 37.4/79 |
| R175 | 7030003600 | S.RES | ERJ3GEYJ 223 V (22 k) | B | 37.4/80.3 |
| R176 | 7030003600 | S.RES | ERJ3GEYJ 223 V (22 k) | B | 35.3/73.9 |
| R201 | 7030003560 | S.RES | ERJ3GEYJ 103 V (10 k) | T | 114.5/85.1 |
| R202 | 7030003560 | S.RES | ERJ3GEYJ 103 V (10 k) | T | 111.3/85.1 |
| R203 | 7030003560 | S.RES | ERJ3GEYJ 103 V (10 k) | T | 118.4/86.4 |
| R204 | 7030003560 | S.RES | ERJ3GEYJ 103 V (10 k) | T | 118.4/85.1 |
| R205 | 7030003560 | S.RES | ERJ3GEYJ 103 V (10 k) | T | 114.5/82.5 |
| R206 | 7030003560 | S.RES | ERJ3GEYJ 103 V (10 k) | T | 111.3/83.8 |
| R207 | 7030003560 | S.RES | ERJ3GEYJ 103 V (10 k) | T | 118.4/83.8 |
| R208 | 7030003560 | S.RES | ERJ3GEYJ 103 V (10 k) | T | 118.4/82.5 |
| R209 | 7030003560 | S.RES | ERJ3GEYJ 103 V (10 k) | T | 114.5/83.8 |
| R212 | 7030003640 | S.RES | ERJ3GEYJ 473 V (47 k) | T | 83.7/82 |
| R213 | 7030003640 | S.RES | ERJ3GEYJ 473 V (47 k) | T | 83.7/83.3 |
| R218 | 7030003520 | S.RES | ERJ3GEYJ 472 V (4.7 k) | T | 116.9/49 |
| R219 | 7030003520 | S.RES | ERJ3GEYJ 472 V (4.7 k) | T | 83.7/79.4 |
| R220 | 7030003520 | S.RES | ERJ3GEYJ 472 V (4.7 k) | B | 94.1/74.4 |
| R221 | 7030003560 | S.RES | ERJ3GEYJ 103 V (10 k) | T | 83.7/73.7 |
| R225 | 7030003560 | S.RES | ERJ3GEYJ 103 V (10 k) | B | 94.1/79.6 |
| R226 | 7030003560 | S.RES | ERJ3GEYJ 103 V (10 k) | B | 94.1/80.9 |
| R227 | 7030003560 | S.RES | ERJ3GEYJ 103 V (10 k) | T | 92/98.2 |
| R228 | 7030003560 | S.RES | ERJ3GEYJ 103 V (10 k) | T | 92/95.1 |
| R229 | 7030003560 | S.RES | ERJ3GEYJ 103 V (10 k) | T | 91.2/92 |
| R230 | 7030003560 | S.RES | ERJ3GEYJ 103 V (10 k) | T | 93.3/95.1 |
| R231 | 7030003560 | S.RES | ERJ3GEYJ 103 V (10 k) | T | 92.5/92.2 |
| R232 | 7030003560 | S.RES | ERJ3GEYJ 103 V (10 k) | B | 93.4/83.2 |
| R233 | 7030003560 | S.RES | ERJ3GEYJ 103 V (10 k) | T | 93.3/98.2 |
| R234 | 7030003560 | S.RES | ERJ3GEYJ 103 V (10 k) | T | 93.8/92.2 |
| R235 | 7030003560 | S.RES | ERJ3GEYJ 103 V (10 k) | T | 94.6/95.1 |
| R236 | 7030003560 | S.RES | ERJ3GEYJ 103 V (10 k) | T | 94.6/98.2 |
| R237 | 7030003560 | S.RES | ERJ3GEYJ 103 V (10 k) | B | 94.7/83.2 |
| R238 | 7030003560 | S.RES | ERJ3GEYJ 103 V (10 k) | T | 95.1/92.2 |
| R239 | 7030003560 | S.RES | ERJ3GEYJ 103 V (10 k) | T | 95.9/95.1 |
| R240 | 7030003560 | S.RES | ERJ3GEYJ 103 V (10 k) | T | 95.9/98.2 |
| R241 | 7030003560 | S.RES | ERJ3GEYJ 103 V (10 k) | B | 97/89.4 |
| R242 | 7030003560 | S.RES | ERJ3GEYJ 103 V (10 k) | T | 96.6/92 |
| R243 | 7030003560 | S.RES | ERJ3GEYJ 103 V (10 k) | B | 96/83.2 |
| R244 | 7030003560 | S.RES | ERJ3GEYJ 103 V (10 k) | T | 96.6/64.7 |
| R245 | 7030003560 | S.RES | ERJ3GEYJ 103 V (10 k) | T | 90.1/64.7 |
| R246 | 7030003560 | S.RES | ERJ3GEYJ 103 V (10 k) | T | 88.8/61.6 |
| R247 | 7030003560 | S.RES | ERJ3GEYJ 103 V (10 k) | B | 96.7/74.4 |
| R248 | 7030003560 | S.RES | ERJ3GEYJ 103 V (10 k) | T | 91.4/64.7 |
| R249 | 7030003560 | S.RES | ERJ3GEYJ 103 V (10 k) | T | 86.2/64.7 |
| R250 | 7030003560 | S.RES | ERJ3GEYJ 103 V (10 k) | T | 87.5/64.7 |
| R251 | 7030003560 | S.RES | ERJ3GEYJ 103 V (10 k) | T | 90.1/61.6 |
| R252 | 7030003560 | S.RES | ERJ3GEYJ 103 V (10 k) | T | 87.5/61.6 |
| R253 | 7030003560 | S.RES | ERJ3GEYJ 103 V (10 k) | T | 83.7/75 |
| R254 | 7030003560 | S.RES | ERJ3GEYJ 103 V (10 k) | T | 88.8/64.7 |
| R255 | 7030003560 | S.RES | ERJ3GEYJ 103 V (10 k) | T | 86.2/61.6 |
| R256 | 7030003560 | S.RES | ERJ3GEYJ 103 V (10 k) | B | 96.7/77 |
| R257 | 7030003560 | S.RES | ERJ3GEYJ 103 V (10 k) | T | 92.7/64.7 |
| R258 | 7030003560 | S.RES | ERJ3GEYJ 103 V (10 k) | B | 96.7/78.3 |
| R259 | 7030003560 | S.RES | ERJ3GEYJ 103 V (10 k) | T | 92.7/61.6 |
| R260 | 7030003560 | S.RES | ERJ3GEYJ 103 V (10 k) | B | 96.7/79.6 |
| R261 | 7030003560 | S.RES | ERJ3GEYJ 103 V (10 k) | T | 94/61.6 |
| R262 | 7030003560 | S.RES | ERJ3GEYJ 103 V (10 k) | B | 96.7/80.9 |
| R263 | 7030003560 | S.RES | ERJ3GEYJ 103 V (10 k) | B | 94/66.6 |
| R264 | 7030003560 | S.RES | ERJ3GEYJ 103 V (10 k) | B | 98/72.6 |
| R265 | 7030003560 | S.RES | ERJ3GEYJ 103 V (10 k) | T | 92.7/59 |
| R266 | 7030003560 | S.RES | ERJ3GEYJ 103 V (10 k) | T | 94/59 |
| R267 | 7030003560 | S.RES | ERJ3GEYJ 103 V (10 k) | T | 95.3/64.7 |
| R268 | 7030003560 | S.RES | ERJ3GEYJ 103 V (10 k) | B | 91.4/66.6 |
| R269 | 7030003560 | S.RES | ERJ3GEYJ 103 V (10 k) | T | 94/64.7 |

M.=Mounted side (T: Mounted on the Top side, B: Mounted on the Bottom side)
S.=Surface mount

## [LOGIC UNIT]

| REF NO. | ORDER NO. | DESCRIPTION | M. | H/V LOCATION |
|---|---|---|---|---|
| R270 | 7030003560 | S.RES ERJ3GEYJ 103 V (10 k) | T | 91.4/61.6 |
| R271 | 7030003560 | S.RES ERJ3GEYJ 103 V (10 k) | T | 91.4/59 |
| R272 | 7030003560 | S.RES ERJ3GEYJ 103 V (10 k) | B | 114.7/71.1 |
| R273 | 7030003560 | S.RES ERJ3GEYJ 103 V (10 k) | T | 114/68.2 |
| R274 | 7030003560 | S.RES ERJ3GEYJ 103 V (10 k) | B | 99.9/79.7 |
| R275 | 7030003560 | S.RES ERJ3GEYJ 103 V (10 k) | T | 111/69.5 |
| R276 | 7030003560 | S.RES ERJ3GEYJ 103 V (10 k) | T | 108.7/64.8 |
| R277 | 7030003560 | S.RES ERJ3GEYJ 103 V (10 k) | T | 114/66.9 |
| R278 | 7030003560 | S.RES ERJ3GEYJ 103 V (10 k) | T | 114/65.6 |
| R279 | 7030003560 | S.RES ERJ3GEYJ 103 V (10 k) | B | 99.9/81 |
| R280 | 7030003560 | S.RES ERJ3GEYJ 103 V (10 k) | T | 114/69.5 |
| R281 | 7030003560 | S.RES ERJ3GEYJ 103 V (10 k) | B | 100.6/75.2 |
| R282 | 7030003560 | S.RES ERJ3GEYJ 103 V (10 k) | B | 99.3/75.2 |
| R283 | 7030003560 | S.RES ERJ3GEYJ 103 V (10 k) | B | 105.6/65.2 |
| R284 | 7030003560 | S.RES ERJ3GEYJ 103 V (10 k) | B | 105.6/66.5 |
| R285 | 7030003560 | S.RES ERJ3GEYJ 103 V (10 k) | B | 99.9/78.4 |
| R286 | 7030003560 | S.RES ERJ3GEYJ 103 V (10 k) | T | 114/64.3 |
| R287 | 7030003560 | S.RES ERJ3GEYJ 103 V (10 k) | T | 103.5/65.6 |
| R288 | 7030003560 | S.RES ERJ3GEYJ 103 V (10 k) | T | 108.7/63.4 |
| R289 | 7030003560 | S.RES ERJ3GEYJ 103 V (10 k) | T | 100.9/65.5 |
| R290 | 7030003560 | S.RES ERJ3GEYJ 103 V (10 k) | B | 99.9/77 |
| R291 | 7030003560 | S.RES ERJ3GEYJ 103 V (10 k) | T | 106.1/65.5 |
| R292 | 7030003560 | S.RES ERJ3GEYJ 103 V (10 k) | B | 94.1/75.7 |
| R293 | 7030003560 | S.RES ERJ3GEYJ 103 V (10 k) | B | 94.1/77 |
| R294 | 7030003560 | S.RES ERJ3GEYJ 103 V (10 k) | B | 94.1/78.3 |
| R295 | 7030003640 | S.RES ERJ3GEYJ 473 V (47 k) | B | 96.7/75.7 |
| R296 | 7030003560 | S.RES ERJ3GEYJ 103 V (10 k) | T | 111.3/87.7 |
| R297 | 7030003560 | S.RES ERJ3GEYJ 103 V (10 k) | T | 111.3/91.6 |
| R298 | 7030003560 | S.RES ERJ3GEYJ 103 V (10 k) | T | 118.4/91.6 |
| R299 | 7030003560 | S.RES ERJ3GEYJ 103 V (10 k) | T | 111.3/90.3 |
| R300 | 7030003560 | S.RES ERJ3GEYJ 103 V (10 k) | T | 114.5/90.3 |
| R301 | 7030003560 | S.RES ERJ3GEYJ 103 V (10 k) | T | 118.4/90.3 |
| R302 | 7030003560 | S.RES ERJ3GEYJ 103 V (10 k) | T | 114.5/91.6 |
| R303 | 7030003560 | S.RES ERJ3GEYJ 103 V (10 k) | T | 118.4/89 |
| R304 | 7030003560 | S.RES ERJ3GEYJ 103 V (10 k) | T | 114.5/89 |
| R305 | 7030003560 | S.RES ERJ3GEYJ 103 V (10 k) | T | 111.3/89 |
| R306 | 7030003560 | S.RES ERJ3GEYJ 103 V (10 k) | T | 111.3/86.4 |
| R307 | 7030003560 | S.RES ERJ3GEYJ 103 V (10 k) | T | 114.5/86.4 |
| R308 | 7030003560 | S.RES ERJ3GEYJ 103 V (10 k) | T | 118.4/87.7 |
| R309 | 7030003560 | S.RES ERJ3GEYJ 103 V (10 k) | T | 114.5/87.7 |
| R310 | 7030003560 | S.RES ERJ3GEYJ 103 V (10 k) | T | 111/68.2 |
| R311 | 7030003560 | S.RES ERJ3GEYJ 103 V (10 k) | B | 116.1/71.1 |
| R313 | 7030003410 | S.RES ERJ3GEYJ 561 V (560) | T | 209.8/36.7 |
| R314 | 7030003340 | S.RES ERJ3GEYJ 151 V (150) | B | 216.8/32.5 |
| R315 | 7030003340 | S.RES ERJ3GEYJ 151 V (150) | B | 218.1/32.5 |
| R316 | 7030003340 | S.RES ERJ3GEYJ 151 V (150) | B | 216.8/29.5 |
| R317 | 7030003340 | S.RES ERJ3GEYJ 151 V (150) | B | 218.1/29.5 |
| R318 | 7030003340 | S.RES ERJ3GEYJ 151 V (150) | B | 216.8/26.5 |
| R319 | 7030003340 | S.RES ERJ3GEYJ 151 V (150) | B | 218.1/26.5 |
| R320 | 7030003240 | S.RES ERJ3GEYJ 220 V (22) | T | 203.9/17.8 |
| R321 | 7030003240 | S.RES ERJ3GEYJ 220 V (22) | T | 203.9/20.7 |
| R322 | 7030003250 | S.RES ERJ3GEYJ 270 V (27) | B | 213.9/7.4 |
| R323 | 7030003250 | S.RES ERJ3GEYJ 270 V (27) | B | 215.9/3.3 |
| R324 | 7030003580 | S.RES ERJ3GEYJ 153 V (15 k) | B | 213.9/6.1 |
| R325 | 7030003580 | S.RES ERJ3GEYJ 153 V (15 k) | B | 215.9/4.6 |
| R326 | 7030003250 | S.RES ERJ3GEYJ 270 V (27) | B | 227.4/4.9 |
| R327 | 7030003250 | S.RES ERJ3GEYJ 270 V (27) | B | 230/4.9 |
| R328 | 7030003580 | S.RES ERJ3GEYJ 153 V (15 k) | B | 228.1/3.1 |
| R329 | 7030003580 | S.RES ERJ3GEYJ 153 V (15 k) | B | 230.7/3.1 |
| R330 | 7030003560 | S.RES ERJ3GEYJ 103 V (10 k) | B | 222.6/38.8 |
| R331 | 7030003560 | S.RES ERJ3GEYJ 103 V (10 k) | B | 223.9/38.8 |
| R332 | 7030003640 | S.RES ERJ3GEYJ 473 V (47 k) | B | 104.6/25.8 |
| R333 | 7030003640 | S.RES ERJ3GEYJ 473 V (47 k) | B | 113.9/19.1 |
| R334 | 7030003640 | S.RES ERJ3GEYJ 473 V (47 k) | B | 110.7/19.5 |
| R335 | 7030003280 | S.RES ERJ3GEYJ 470 V (47) | B | 109.8/26.4 |
| R336 | 7030003640 | S.RES ERJ3GEYJ 473 V (47 k) | B | 115.5/25.8 |
| R337 | 7030003640 | S.RES ERJ3GEYJ 473 V (47 k) | B | 125.1/23.6 |
| R338 | 7030003640 | S.RES ERJ3GEYJ 473 V (47 k) | B | 125.2/20.6 |
| R339 | 7030003280 | S.RES ERJ3GEYJ 470 V (47) | B | 120.1/27.7 |
| R340 | 7030003280 | S.RES ERJ3GEYJ 470 V (47) | B | 130.8/38.1 |
| R341 | 7030003640 | S.RES ERJ3GEYJ 473 V (47 k) | B | 135.7/33.5 |
| R342 | 7030003280 | S.RES ERJ3GEYJ 470 V (47) | B | 121.7/36.9 |
| R343 | 7030003640 | S.RES ERJ3GEYJ 473 V (47 k) | B | 119.5/30 |
| R344 | 7030003520 | S.RES ERJ3GEYJ 472 V (4.7 k) | B | 129.1/29.1 |
| R345 | 7030003520 | S.RES ERJ3GEYJ 472 V (4.7 k) | B | 116.9/30 |
| R350 | 7030003860 | S.RES ERJ3GE JPW V | T | 119.5/49 |
| R351 | 7030003860 | S.RES ERJ3GE JPW V | B | 100.6/83.2 |
| R353 | 7030003860 | S.RES ERJ3GE JPW V | B | 187.5/12.3 |
| R355 | 7030003860 | S.RES ERJ3GE JPW V | B | 187.5/13.6 |
| R356 | 7030003860 | S.RES ERJ3GE JPW V | B | 185.3/9.9 |
| R361 | 7030003320 | S.RES ERJ3GEYJ 101 V (100) | T | 193.5/25.6 |
| R401 | 7030003320 | S.RES ERJ3GEYJ 101 V (100) | B | 39.9/44.9 |
| R403 | 7030003560 | S.RES ERJ3GEYJ 103 V (10 k) | B | 16.5/35.6 |
| R404 | 7030003560 | S.RES ERJ3GEYJ 103 V (10 k) | B | 22.8/35.6 |
| R405 | 7030003560 | S.RES ERJ3GEYJ 103 V (10 k) | B | 7.9/40.8 |
| R406 | 7030003560 | S.RES ERJ3GEYJ 103 V (10 k) | T | 24.3/46.5 |
| R407 | 7030003560 | S.RES ERJ3GEYJ 103 V (10 k) | T | 22.5/47.2 |
| R408 | 7030003560 | S.RES ERJ3GEYJ 103 V (10 k) | T | 28.1/51.8 |
| R409 | 7030003560 | S.RES ERJ3GEYJ 103 V (10 k) | T | 22.9/57 |
| R410 | 7030003560 | S.RES ERJ3GEYJ 103 V (10 k) | T | 20.3/57 |
| R411 | 7030003560 | S.RES ERJ3GEYJ 103 V (10 k) | T | 24.2/57 |
| R412 | 7030003560 | S.RES ERJ3GEYJ 103 V (10 k) | T | 25.5/57 |
| R413 | 7030003560 | S.RES ERJ3GEYJ 103 V (10 k) | T | 26.8/57 |
| R414 | 7030003560 | S.RES ERJ3GEYJ 103 V (10 k) | T | 21.6/57 |
| R415 | 7030003560 | S.RES ERJ3GEYJ 103 V (10 k) | B | 25.6/26.2 |
| R416 | 7030003560 | S.RES ERJ3GEYJ 103 V (10 k) | B | 24.3/26.2 |
| R417 | 7030003560 | S.RES ERJ3GEYJ 103 V (10 k) | B | 23/26.2 |
| R418 | 7030003320 | S.RES ERJ3GEYJ 101 V (100) | B | 36.1/82.5 |
| R419 | 7030003440 | S.RES ERJ3GEYJ 102 V (1 k) | B | 10.4/83.3 |
| R420 | 7030003580 | S.RES ERJ3GEYJ 153 V (15 k) | B | 11/81.5 |
| R421 | 7030003470 | S.RES ERJ3GEYJ 182 V (1.8 k) | B | 12.3/76.4 |
| R422 | 7030003250 | S.RES ERJ3GEYJ 270 V (27) | B | 11.5/74.2 |
| R423 | 7030003560 | S.RES ERJ3GEYJ 103 V (10 k) | B | 14.6/90.2 |
| R424 | 7030003560 | S.RES ERJ3GEYJ 103 V (10 k) | B | 11.5/85.7 |

## [LOGIC UNIT]

| REF NO. | ORDER NO. | DESCRIPTION | M. | H/V LOCATION |
|---|---|---|---|---|
| R425 | 7030003380 | S.RES ERJ3GEYJ 331 V (330) | T | 9.3/96.4 |
| R426 | 7030003380 | S.RES ERJ3GEYJ 331 V (330) | T | 9.3/94.9 |
| R427 | 7030003380 | S.RES ERJ3GEYJ 331 V (330) | T | 9.3/93.1 |
| R428 | 7030003320 | S.RES ERJ3GEYJ 101 V (100) | B | 147.4/21.2 |
| R429 | 7030003320 | S.RES ERJ3GEYJ 101 V (100) | B | 148.7/21.2 |
| R430 | 7030003320 | S.RES ERJ3GEYJ 101 V (100) | B | 151.3/21.2 |
| R431 | 7030003320 | S.RES ERJ3GEYJ 101 V (100) | B | 150/21.2 |
| R432 | 7030003320 | S.RES ERJ3GEYJ 101 V (100) | B | 154.3/15.2 |
| R433 | 7030003320 | S.RES ERJ3GEYJ 101 V (100) | B | 155.6/15.2 |
| R434 | 7030003320 | S.RES ERJ3GEYJ 101 V (100) | B | 155.6/18.4 |
| R435 | 7030003320 | S.RES ERJ3GEYJ 101 V (100) | B | 154.3/18.4 |
| R436 | 7030003340 | S.RES ERJ3GEYJ 151 V (150) | B | 156.5/6.7 |
| R437 | 7030003340 | S.RES ERJ3GEYJ 151 V (150) | B | 158.5/6.7 |
| R438 | 7030003340 | S.RES ERJ3GEYJ 151 V (150) | B | 162.5/6.7 |
| R439 | 7030003340 | S.RES ERJ3GEYJ 151 V (150) | B | 164.5/6.7 |
| R440 | 7030003340 | S.RES ERJ3GEYJ 151 V (150) | B | 156.5/4.1 |
| R441 | 7030003340 | S.RES ERJ3GEYJ 151 V (150) | B | 158.5/4.1 |
| R442 | 7030003340 | S.RES ERJ3GEYJ 151 V (150) | B | 164.5/4.1 |
| R443 | 7030003340 | S.RES ERJ3GEYJ 151 V (150) | B | 162.5/4.1 |
| R450 | 7030003860 | S.RES ERJ3GE JPW V | T | 36.8/35.4 |
| R601 | 7030003620 | S.RES ERJ3GEYJ 333 V (33 k) | B | 175/55.4 |
| R602 | 7030003590 | S.RES ERJ3GEYJ 183 V (18 k) | B | 171.3/53.1 |
| R603 | 7030003540 | S.RES ERJ3GEYJ 682 V (6.8 k) | B | 173.1/55.2 |
| R604 | 7030003640 | S.RES ERJ3GEYJ 473 V (47 k) | B | 171.3/55.7 |
| R605 | 7030003680 | S.RES ERJ3GEYJ 104 V (100 k) | B | 167.3/55 |
| R606 | 7030003680 | S.RES ERJ3GEYJ 104 V (100 k) | B | 102.8/31.6 |
| R607 | 7030003350 | S.RES ERJ3GEYJ 181 V (180) | B | 87.7/14.2 |
| R608 | 7030003520 | S.RES ERJ3GEYJ 472 V (4.7 k) | B | 90.5/14.2 |
| R609 | 7030003440 | S.RES ERJ3GEYJ 102 V (1 k) | T | 80.8/23.6 |
| R610 | 7030003440 | S.RES ERJ3GEYJ 102 V (1 k) | T | 80.8/24.9 |
| R611 | 7030003440 | S.RES ERJ3GEYJ 102 V (1 k) | T | 80.8/26.2 |
| R612 | 7030003440 | S.RES ERJ3GEYJ 102 V (1 k) | T | 80.1/27.5 |
| R613 | 7030003440 | S.RES ERJ3GEYJ 102 V (1 k) | T | 83.4/27.9 |
| R614 | 7030003440 | S.RES ERJ3GEYJ 102 V (1 k) | T | 83.4/29.2 |
| R615 | 7030003440 | S.RES ERJ3GEYJ 102 V (1 k) | T | 83.4/30.5 |
| R616 | 7030003440 | S.RES ERJ3GEYJ 102 V (1 k) | T | 83.4/31.8 |
| R617 | 7030003800 | S.RES ERJ3GEYJ 105 V (1 M) | T | 86.5/31.8 |
| R618 | 7030003800 | S.RES ERJ3GEYJ 105 V (1 M) | T | 86.5/30.5 |
| R619 | 7030003800 | S.RES ERJ3GEYJ 105 V (1 M) | T | 86.5/29.2 |
| R620 | 7030003800 | S.RES ERJ3GEYJ 105 V (1 M) | T | 86.5/27.9 |
| R621 | 7030003800 | S.RES ERJ3GEYJ 105 V (1 M) | T | 84.1/26.6 |
| R622 | 7030003800 | S.RES ERJ3GEYJ 105 V (1 M) | T | 84.1/25.3 |
| R623 | 7030003800 | S.RES ERJ3GEYJ 105 V (1 M) | T | 84.3/23.6 |
| R624 | 7030003800 | S.RES ERJ3GEYJ 105 V (1 M) | T | 84.3/22.3 |
| R625 | 7030003640 | S.RES ERJ3GEYJ 473 V (47 k) | B | 68.6/27.3 |
| R626 | 7030003600 | S.RES ERJ3GEYJ 223 V (22 k) | B | 68.6/28.6 |
| R627 | 7030003640 | S.RES ERJ3GEYJ 473 V (47 k) | B | 66.3/36.4 |
| R628 | 7030003640 | S.RES ERJ3GEYJ 473 V (47 k) | B | 66.3/35.1 |
| R629 | 7030003640 | S.RES ERJ3GEYJ 473 V (47 k) | B | 71.2/34.9 |
| R630 | 7030003520 | S.RES ERJ3GEYJ 472 V (4.7 k) | B | 68.6/32.5 |
| R631 | 7030003520 | S.RES ERJ3GEYJ 472 V (4.7 k) | T | 67.4/27 |
| R632 | 7030003520 | S.RES ERJ3GEYJ 472 V (4.7 k) | T | 67.4/30.9 |
| R633 | 7030003520 | S.RES ERJ3GEYJ 472 V (4.7 k) | T | 67.4/28.3 |
| R634 | 7030003520 | S.RES ERJ3GEYJ 472 V (4.7 k) | B | 66.3/33.8 |
| R635 | 7030003520 | S.RES ERJ3GEYJ 472 V (4.7 k) | T | 67.4/29.6 |
| R636 | 7030003640 | S.RES ERJ3GEYJ 473 V (47 k) | B | 58.1/19.5 |
| R637 | 7030003640 | S.RES ERJ3GEYJ 473 V (47 k) | B | 61.8/19.5 |
| R639 | 7030003640 | S.RES ERJ3GEYJ 473 V (47 k) | T | 99.1/19 |
| R640 | 7030003640 | S.RES ERJ3GEYJ 473 V (47 k) | T | 97.8/19 |
| R641 | 7030003640 | S.RES ERJ3GEYJ 473 V (47 k) | T | 96.5/19 |
| R642 | 7030003640 | S.RES ERJ3GEYJ 473 V (47 k) | T | 95.2/19 |
| R643 | 7030003600 | S.RES ERJ3GEYJ 223 V (22 k) | B | 80.9/46.3 |
| R644 | 7030003560 | S.RES ERJ3GEYJ 103 V (10 k) | B | 82.2/46.3 |
| R645 | 7030003520 | S.RES ERJ3GEYJ 472 V (4.7 k) | T | 93.1/40.9 |
| R646 | 7030003720 | S.RES ERJ3GEYJ 224 V (220 k) | B | 101.8/41.5 |
| R647 | 7030003720 | S.RES ERJ3GEYJ 224 V (220 k) | B | 102.8/44.1 |
| R648 | 7030003720 | S.RES ERJ3GEYJ 224 V (220 k) | B | 103.8/41.5 |
| R649 | 7030003720 | S.RES ERJ3GEYJ 224 V (220 k) | B | 104.8/44.1 |
| R650 | 7030003720 | S.RES ERJ3GEYJ 224 V (220 k) | B | 105.8/41.5 |
| R651 | 7030003720 | S.RES ERJ3GEYJ 224 V (220 k) | B | 106.8/44.1 |
| R652 | 7030003720 | S.RES ERJ3GEYJ 224 V (220 k) | B | 107.8/41.5 |
| R653 | 7030003720 | S.RES ERJ3GEYJ 224 V (220 k) | B | 108.7/44.1 |
| R654 | 7030003520 | S.RES ERJ3GEYJ 472 V (4.7 k) | B | 102.8/39.2 |
| R655 | 7030003520 | S.RES ERJ3GEYJ 472 V (4.7 k) | B | 102.8/37.7 |
| R656 | 7030003520 | S.RES ERJ3GEYJ 472 V (4.7 k) | T | 144.4/59.9 |
| R657 | 7030003720 | S.RES ERJ3GEYJ 224 V (220 k) | B | 68.6/26 |
| R658 | 7030003640 | S.RES ERJ3GEYJ 473 V (47 k) | B | 84.2/44.2 |
| R659 | 7030003640 | S.RES ERJ3GEYJ 473 V (47 k) | B | 84.2/45.5 |
| R660 | 7030003640 | S.RES ERJ3GEYJ 473 V (47 k) | B | 102.8/29.5 |
| R661 | 7030003640 | S.RES ERJ3GEYJ 473 V (47 k) | B | 69.4/16.4 |
| R662 | 7030003640 | S.RES ERJ3GEYJ 473 V (47 k) | B | 89.2/14.2 |
| R663 | 7030003640 | S.RES ERJ3GEYJ 473 V (47 k) | B | 71.2/15.9 |
| R664 | 7030003640 | S.RES ERJ3GEYJ 473 V (47 k) | B | 71.2/17.2 |
| R665 | 7030003560 | S.RES ERJ3GEYJ 103 V (10 k) | B | 93.1/14.2 |
| R666 | 7030003560 | S.RES ERJ3GEYJ 103 V (10 k) | B | 78.3/16.5 |
| R667 | 7030003560 | S.RES ERJ3GEYJ 103 V (10 k) | B | 77/16 |
| R668 | 7030003640 | S.RES ERJ3GEYJ 473 V (47 k) | B | 84.9/16.8 |
| R669 | 7030003640 | S.RES ERJ3GEYJ 473 V (47 k) | B | 71.2/14.6 |
| R670 | 7030003640 | S.RES ERJ3GEYJ 473 V (47 k) | T | 94.4/43.5 |
| R671 | 7030003640 | S.RES ERJ3GEYJ 473 V (47 k) | T | 95.7/43.5 |
| R672 | 7030003640 | S.RES ERJ3GEYJ 473 V (47 k) | B | 75.7/16.8 |
| R673 | 7030003640 | S.RES ERJ3GEYJ 473 V (47 k) | B | 74.4/16.8 |
| R674 | 7030003640 | S.RES ERJ3GEYJ 473 V (47 k) | T | 91.3/36.8 |
| R675 | 7030003640 | S.RES ERJ3GEYJ 473 V (47 k) | T | 89.1/31.8 |
| R676 | 7030003640 | S.RES ERJ3GEYJ 473 V (47 k) | B | 94.4/14.2 |
| R677 | 7030003520 | S.RES ERJ3GEYJ 472 V (4.7 k) | T | 146.1/65.1 |
| R678 | 7030003720 | S.RES ERJ3GEYJ 224 V (220 k) | B | 68.6/22.1 |
| R679 | 7030003640 | S.RES ERJ3GEYJ 473 V (47 k) | B | 91.8/14.2 |
| R680 | 7030003520 | S.RES ERJ3GEYJ 472 V (4.7 k) | T | 144.6/65.1 |
| R681 | 7030003520 | S.RES ERJ3GEYJ 472 V (4.7 k) | T | 147.5/65.1 |
| R682 | 7030003520 | S.RES ERJ3GEYJ 472 V (4.7 k) | B | 152.7/60.8 |
| R683 | 7030003720 | S.RES ERJ3GEYJ 224 V (220 k) | B | 68.6/23.4 |
| R684 | 7030003640 | S.RES ERJ3GEYJ 473 V (47 k) | B | 80.2/16.2 |
| R685 | 7030003520 | S.RES ERJ3GEYJ 472 V (4.7 k) | B | 152.7/62.1 |

M.=Mounted side (T: Mounted on the Top side, B: Mounted on the Bottom side)
S.=Surface mount

## [LOGIC UNIT]

| REF NO. | ORDER NO. | DESCRIPTION | M. | H/V LOCATION |
|---|---|---|---|---|
| R686 | 7030003520 | S.RES ERJ3GEYJ 472 V (4.7 k) | B | 152.7/59.5 |
| R687 | 7030003520 | S.RES ERJ3GEYJ 472 V (4.7 k) | B | 152.1/53.6 |
| R688 | 7030003720 | S.RES ERJ3GEYJ 224 V (220 k) | B | 68.6/24.7 |
| R689 | 7030003520 | S.RES ERJ3GEYJ 472 V (4.7 k) | B | 153/56.2 |
| R690 | 7030003520 | S.RES ERJ3GEYJ 472 V (4.7 k) | B | 153/54.9 |
| R691 | 7030003640 | S.RES ERJ3GEYJ 473 V (47 k) | B | 66/31.9 |
| R701 | 7030003860 | S.RES ERJ3GE JPW V | T | 93.1/43.5 |
| R801 | 7030003560 | S.RES ERJ3GEYJ 103 V (10 k) | T | 158.2/72.8 |
| R802 | 7030006210 | S.RES ERJ12YJ4R7U (4.7) | T | 162.3/71.2 |
| R803 | 7030003440 | S.RES ERJ3GEYJ 102 V (1 k) | T | 159.5/72.8 |
| R804 | 7030006210 | S.RES ERJ12YJ4R7U (4.7) | T | 168.9/71.2 |
| R805 | 7030003440 | S.RES ERJ3GEYJ 102 V (1 k) | T | 166.1/72.8 |
| R806 | 7030003560 | S.RES ERJ3GEYJ 103 V (10 k) | T | 164.8/72.8 |
| R807 | 7030006210 | S.RES ERJ12YJ4R7U (4.7) | T | 175.5/71.2 |
| R808 | 7030003440 | S.RES ERJ3GEYJ 102 V (1 k) | T | 173/72.8 |
| R809 | 7030003560 | S.RES ERJ3GEYJ 103 V (10 k) | T | 171.6/72.8 |
| R810 | 7030003320 | S.RES ERJ3GEYJ 101 V (100) | B | 154.9/29.9 |
| R811 | 7030003320 | S.RES ERJ3GEYJ 101 V (100) | B | 154.9/27.5 |
| R812 | 7030010440 | S.RES ERJ1TYJ 680U (68) | B | 133/111.2 |
| R813 | 7030003560 | S.RES ERJ3GEYJ 103 V (10 k) | B | 192.6/10 |
| R814 | 7030003440 | S.RES ERJ3GEYJ 102 V (1 k) | T | 105.6/116.6 |
| R816 | 7030003560 | S.RES ERJ3GEYJ 103 V (10 k) | T | 158.9/74.7 |
| R817 | 7030003560 | S.RES ERJ3GEYJ 103 V (10 k) | T | 161.5/74.7 |
| R818 | 7030000140 | S.RES MCR10EZHJ 10 (100) | T | 155.6/78.2 |
| R819 | 7030007190 | S.RES ERJ12YJ220U (22) | T | 135.4/111 |
| R821 | 7030003370 | S.RES ERJ3GEYJ 271 V (270) | B | 15.3/100 |
| R822 | 7030009720 | S.RES ERJ12YJ102U (1 k) | T | 19.9/103.2 |
| R823 | 7030003810 | S.RES ERJ3GEYJ 125 V (1.2 M) | B | 16.8/109.5 |
| R824 | 7030003810 | S.RES ERJ3GEYJ 125 V (1.2 M) | B | 13.5/107.1 |
| R825 | 7030008170 | S.RES ERJ12YJ1R0U (1) | B | 37/112.2 |
| R826 | 7030003610 | S.RES ERJ3GEYJ 273 V (27 k) | B | 16.8/110.8 |
| R827 | 7030003610 | S.RES ERJ3GEYJ 273 V (27 k) | B | 13.5/109.9 |
| R828 | 7030003560 | S.RES ERJ3GEYJ 103 V (10 k) | B | 25.4/101.5 |
| R829 | 7030000340 | S.RES MCR10EZHJ 470 (471) | B | 20.6/104.5 |
| R830 | 7030003600 | S.RES ERJ3GEYJ 223 V (22 k) | B | 18.5/100 |
| R832 | 7030003600 | S.RES ERJ3GEYJ 223 V (22 k) | B | 18.5/98.7 |
| R833 | 7030003560 | S.RES ERJ3GEYJ 103 V (10 k) | B | 18.5/97.4 |
| R850 | 7030003860 | S.RES ERJ3GE JPW V | B | 182.4/50.2 |
| R851 | 7030003680 | S.RES ERJ3GEYJ 104 V (100 k) | B | 187.1/61.9 |
| R852 | 7030003680 | S.RES ERJ3GEYJ 104 V (100 k) | B | 185/61.9 |
| R853 | 7030003770 | S.RES ERJ3GEYJ 564 V (560 k) | B | 183.7/61.9 |
| R854 | 7030003770 | S.RES ERJ3GEYJ 564 V (560 k) | B | 188.4/61.9 |
| R855 | 7030003520 | S.RES ERJ3GEYJ 472 V (4.7 k) | B | 191.5/61.9 |
| R856 | 7030003520 | S.RES ERJ3GEYJ 472 V (4.7 k) | B | 180.6/61.9 |
| R857 | 7030003560 | S.RES ERJ3GEYJ 103 V (10 k) | B | 144.7/14.2 |
| R858 | 7030003460 | S.RES ERJ3GEYJ 152 V (1.5 k) | B | 144.7/12.9 |
| R859 | 7030003470 | S.RES ERJ3GEYJ 182 V (1.8 k) | B | 142.1/12.9 |
| R860 | 7030003500 | S.RES ERJ3GEYJ 332 V (3.3 k) | B | 144.7/15.5 |
| R861 | 7030003480 | S.RES ERJ3GEYJ 222 V (2.2 k) | B | 141.4/14.9 |
| R862 | 7030003380 | S.RES ERJ3GEYJ 331 V (330) | B | 147.7/3.8 |
| R863 | 7030003560 | S.RES ERJ3GEYJ 103 V (10 k) | B | 134.5/21.1 |
| R864 | 7030003460 | S.RES ERJ3GEYJ 152 V (1.5 k) | B | 134.5/19.8 |
| R865 | 7030003470 | S.RES ERJ3GEYJ 182 V (1.8 k) | B | 134.5/18.5 |
| R866 | 7030003500 | S.RES ERJ3GEYJ 332 V (3.3 k) | B | 131.7/17.2 |
| R867 | 7030003480 | S.RES ERJ3GEYJ 222 V (2.2 k) | B | 131.7/18.5 |
| R868 | 7030003380 | S.RES ERJ3GEYJ 331 V (330) | B | 134.1/3.8 |
| R869 | 7030003560 | S.RES ERJ3GEYJ 103 V (10 k) | B | 114.1/30 |
| R870 | 7030003560 | S.RES ERJ3GEYJ 103 V (10 k) | B | 144.7/7.2 |
| R871 | 7030003460 | S.RES ERJ3GEYJ 152 V (1.5 k) | B | 143.4/7.2 |
| R872 | 7030003470 | S.RES ERJ3GEYJ 182 V (1.8 k) | B | 142.1/7.2 |
| R873 | 7030003500 | S.RES ERJ3GEYJ 332 V (3.3 k) | B | 138.2/7.2 |
| R874 | 7030003480 | S.RES ERJ3GEYJ 222 V (2.2 k) | B | 139.5/7.2 |
| R875 | 7030003380 | S.RES ERJ3GEYJ 331 V (330) | B | 140.9/3.8 |
| R876 | 7030003410 | S.RES ERJ3GEYJ 561 V (560) | B | 120.5/14.9 |
| R877 | 7030003700 | S.RES ERJ3GEYJ 154 V (150 k) | B | 120.5/13.6 |
| R878 | 7030003520 | S.RES ERJ3GEYJ 472 V (4.7 k) | B | 120.5/12.3 |
| R879 | 7030003550 | S.RES ERJ3GEYJ 822 V (8.2 k) | B | 117.9/4.2 |
| R880 | 7030003690 | S.RES ERJ3GEYJ 124 V (120 k) | B | 119.7/5 |
| R881 | 7030003520 | S.RES ERJ3GEYJ 472 V (4.7 k) | B | 122.3/5 |
| R882 | 7030003410 | S.RES ERJ3GEYJ 561 V (560) | B | 108.9/15.9 |
| R883 | 7030003550 | S.RES ERJ3GEYJ 822 V (8.2 k) | B | 108.9/14.6 |
| R884 | 7030003520 | S.RES ERJ3GEYJ 472 V (4.7 k) | B | 108.9/13.3 |
| R885 | 7030003410 | S.RES ERJ3GEYJ 561 V (560) | B | 108.9/4.1 |
| R886 | 7030003550 | S.RES ERJ3GEYJ 822 V (8.2 k) | B | 109.7/6.2 |
| R887 | 7030003520 | S.RES ERJ3GEYJ 472 V (4.7 k) | B | 108.4/6.2 |
| R888 | 7030003360 | S.RES ERJ3GEYJ 221 V (220) | B | 181.6/48 |
| R889 | 7030003640 | S.RES ERJ3GEYJ 473 V (47 k) | B | 184.5/48.3 |
| R890 | 7030003360 | S.RES ERJ3GEYJ 221 V (220) | B | 191/47.8 |
| R891 | 7030003560 | S.RES ERJ3GEYJ 103 V (10 k) | B | 188.2/48.3 |
| R892 | 7030003730 | S.RES ERJ3GEYJ 274 V (270 k) | B | 190.2/50.2 |
| R893 | 7030003680 | S.RES ERJ3GEYJ 104 V (100 k) | B | 183.7/50.2 |
| R894 | 7030003200 | S.RES ERJ3GEYJ 100 V (10) | B | 193.2/55.7 |
| R895 | 7030003680 | S.RES ERJ3GEYJ 104 V (100 k) | B | 188.9/50.2 |
| R896 | 7030003200 | S.RES ERJ3GEYJ 100 V (10) | B | 192.9/52.8 |
| R901 | 7030003200 | S.RES ERJ3GEYJ 100 V (10) | T | 165.7/37.7 |
| R902 | 7030003200 | S.RES ERJ3GEYJ 100 V (10) | T | 166.1/30.8 |
| R903 | 7030003200 | S.RES ERJ3GEYJ 100 V (10) | T | 166.6/40.3 |
| R904 | 7030003200 | S.RES ERJ3GEYJ 100 V (10) | T | 167.1/28.2 |
| R905 | 7030003200 | S.RES ERJ3GEYJ 100 V (10) | T | 167.6/37.7 |
| R906 | 7030003200 | S.RES ERJ3GEYJ 100 V (10) | T | 168.1/30.8 |
| R907 | 7030003200 | S.RES ERJ3GEYJ 100 V (10) | T | 168.6/40.3 |
| R908 | 7030003200 | S.RES ERJ3GEYJ 100 V (10) | T | 169.1/28.2 |
| R909 | 7030003200 | S.RES ERJ3GEYJ 100 V (10) | T | 169.6/37.7 |
| R910 | 7030003200 | S.RES ERJ3GEYJ 100 V (10) | T | 170.1/30.8 |
| R911 | 7030003200 | S.RES ERJ3GEYJ 100 V (10) | T | 170.6/40.3 |
| R912 | 7030003200 | S.RES ERJ3GEYJ 100 V (10) | T | 171.6/37.7 |
| R913 | 7030003200 | S.RES ERJ3GEYJ 100 V (10) | T | 172.1/30.8 |
| R914 | 7030003200 | S.RES ERJ3GEYJ 100 V (10) | T | 172.6/40.3 |
| R915 | 7030003200 | S.RES ERJ3GEYJ 100 V (10) | T | 173.1/28.2 |
| R916 | 7030003200 | S.RES ERJ3GEYJ 100 V (10) | T | 173.6/37.7 |
| R917 | 7030003200 | S.RES ERJ3GEYJ 100 V (10) | T | 174.1/30.8 |
| R918 | 7030003200 | S.RES ERJ3GEYJ 100 V (10) | T | 174.6/40.3 |
| R919 | 7030003200 | S.RES ERJ3GEYJ 100 V (10) | T | 175.1/28.2 |
| R920 | 7030003200 | S.RES ERJ3GEYJ 100 V (10) | T | 175.6/37.7 |

## [LOGIC UNIT]

| REF NO. | ORDER NO. | DESCRIPTION | M. | H/V LOCATION |
|---|---|---|---|---|
| R921 | 7030003200 | S.RES ERJ3GEYJ 100 V (10) | T | 176.1/30.8 |
| R922 | 7030003200 | S.RES ERJ3GEYJ 100 V (10) | T | 176.6/40.3 |
| R923 | 7030003200 | S.RES ERJ3GEYJ 100 V (10) | T | 177.1/28.2 |
| R924 | 7030003200 | S.RES ERJ3GEYJ 100 V (10) | T | 177.6/37.7 |
| R925 | 7030003200 | S.RES ERJ3GEYJ 100 V (10) | T | 178.1/30.8 |
| R926 | 7030003200 | S.RES ERJ3GEYJ 100 V (10) | T | 178.6/40.3 |
| R927 | 7030003200 | S.RES ERJ3GEYJ 100 V (10) | T | 179.1/28.2 |
| R928 | 7030003200 | S.RES ERJ3GEYJ 100 V (10) | T | 179.6/37.7 |
| R929 | 7030003200 | S.RES ERJ3GEYJ 100 V (10) | T | 180.1/30.8 |
| R930 | 7030003200 | S.RES ERJ3GEYJ 100 V (10) | T | 180.6/40.3 |
| R931 | 7030003200 | S.RES ERJ3GEYJ 100 V (10) | T | 181.1/28.2 |
| R932 | 7030003200 | S.RES ERJ3GEYJ 100 V (10) | T | 182.1/30.8 |
| R933 | 7030003200 | S.RES ERJ3GEYJ 100 V (10) | T | 182.6/40.3 |
| R934 | 7030003200 | S.RES ERJ3GEYJ 100 V (10) | T | 183.1/28.2 |
| R935 | 7030003200 | S.RES ERJ3GEYJ 100 V (10) | T | 183.6/37.7 |
| R936 | 7030003200 | S.RES ERJ3GEYJ 100 V (10) | T | 184.1/30.8 |
| R937 | 7030003200 | S.RES ERJ3GEYJ 100 V (10) | T | 185.1/28.2 |
| R938 | 7030003200 | S.RES ERJ3GEYJ 100 V (10) | T | 133/37.7 |
| R939 | 7030003200 | S.RES ERJ3GEYJ 100 V (10) | T | 134.2/30.8 |
| R940 | 7030003200 | S.RES ERJ3GEYJ 100 V (10) | T | 134.4/37.8 |
| R941 | 7030003200 | S.RES ERJ3GEYJ 100 V (10) | T | 135.2/28.3 |
| R942 | 7030003200 | S.RES ERJ3GEYJ 100 V (10) | T | 135.7/37.7 |
| R943 | 7030003200 | S.RES ERJ3GEYJ 100 V (10) | T | 136.2/30.8 |
| R944 | 7030003200 | S.RES ERJ3GEYJ 100 V (10) | T | 136.7/40.3 |
| R945 | 7030003200 | S.RES ERJ3GEYJ 100 V (10) | T | 137.2/28.3 |
| R946 | 7030003200 | S.RES ERJ3GEYJ 100 V (10) | T | 137.7/37.7 |
| R947 | 7030003200 | S.RES ERJ3GEYJ 100 V (10) | T | 138.2/30.8 |
| R949 | 7030003200 | S.RES ERJ3GEYJ 100 V (10) | T | 139.2/28.3 |
| R950 | 7030003200 | S.RES ERJ3GEYJ 100 V (10) | T | 139.7/37.7 |
| R951 | 7030003200 | S.RES ERJ3GEYJ 100 V (10) | T | 140.2/30.8 |
| R952 | 7030003200 | S.RES ERJ3GEYJ 100 V (10) | T | 140.7/40.3 |
| R953 | 7030003200 | S.RES ERJ3GEYJ 100 V (10) | T | 141.2/28.3 |
| R954 | 7030003200 | S.RES ERJ3GEYJ 100 V (10) | T | 141.7/37.7 |
| R955 | 7030003200 | S.RES ERJ3GEYJ 100 V (10) | T | 142.2/30.8 |
| R956 | 7030003200 | S.RES ERJ3GEYJ 100 V (10) | T | 142.7/40.3 |
| R957 | 7030003200 | S.RES ERJ3GEYJ 100 V (10) | T | 143.2/28.3 |
| R958 | 7030003200 | S.RES ERJ3GEYJ 100 V (10) | T | 143.7/37.7 |
| R959 | 7030003200 | S.RES ERJ3GEYJ 100 V (10) | T | 144.2/30.8 |
| R960 | 7030003200 | S.RES ERJ3GEYJ 100 V (10) | T | 144.7/40.3 |
| R961 | 7030003200 | S.RES ERJ3GEYJ 100 V (10) | T | 145.7/37.7 |
| R962 | 7030003200 | S.RES ERJ3GEYJ 100 V (10) | T | 146.2/30.8 |
| R963 | 7030003200 | S.RES ERJ3GEYJ 100 V (10) | T | 146.7/40.3 |
| R964 | 7030003200 | S.RES ERJ3GEYJ 100 V (10) | T | 147.2/28.3 |
| R965 | 7030003200 | S.RES ERJ3GEYJ 100 V (10) | T | 147.7/37.7 |
| R966 | 7030003200 | S.RES ERJ3GEYJ 100 V (10) | T | 148.2/30.8 |
| R967 | 7030003200 | S.RES ERJ3GEYJ 100 V (10) | T | 148.7/40.3 |
| R968 | 7030003200 | S.RES ERJ3GEYJ 100 V (10) | T | 149.7/37.7 |
| R969 | 7030003200 | S.RES ERJ3GEYJ 100 V (10) | T | 150.2/28.3 |
| R970 | 7030003200 | S.RES ERJ3GEYJ 100 V (10) | T | 150.7/40.3 |
| R971 | 7030003200 | S.RES ERJ3GEYJ 100 V (10) | T | 151.2/30.8 |
| R974 | 7030003200 | S.RES ERJ3GEYJ 100 V (10) | T | 153.2/30.8 |
| R975 | 7030003200 | S.RES ERJ3GEYJ 100 V (10) | B | 214.5/83.4 |
| R976 | 7030003200 | S.RES ERJ3GEYJ 100 V (10) | B | 220.6/83 |
| R977 | 7030003200 | S.RES ERJ3GEYJ 100 V (10) | B | 214.5/86 |
| R978 | 7030003200 | S.RES ERJ3GEYJ 100 V (10) | B | 220.6/87 |
| R979 | 7030003200 | S.RES ERJ3GEYJ 100 V (10) | B | 214.5/88 |
| R980 | 7030003200 | S.RES ERJ3GEYJ 100 V (10) | B | 220.6/89 |
| R981 | 7030003200 | S.RES ERJ3GEYJ 100 V (10) | B | 220.6/91 |
| R982 | 7030003200 | S.RES ERJ3GEYJ 100 V (10) | B | 220.6/93 |
| R983 | 7030003200 | S.RES ERJ3GEYJ 100 V (10) | B | 214.5/94 |
| R984 | 7030003200 | S.RES ERJ3GEYJ 100 V (10) | B | 12.2/115.7 |
| R985 | 7030003200 | S.RES ERJ3GEYJ 100 V (10) | B | 13.6/115.7 |
| R986 | 7030003200 | S.RES ERJ3GEYJ 100 V (10) | B | 14.9/115.7 |
| R987 | 7030003200 | S.RES ERJ3GEYJ 100 V (10) | B | 16.2/115.7 |
| R988 | 7030003200 | S.RES ERJ3GEYJ 100 V (10) | B | 17.5/115.7 |
| R989 | 7030003200 | S.RES ERJ3GEYJ 100 V (10) | T | 181.6/37.7 |
| R990 | 7030003440 | S.RES ERJ3GEYJ 102 V (1 k) | B | 182.5/92.1 |
| R991 | 7030003440 | S.RES ERJ3GEYJ 102 V (1 k) | B | 183.5/83.5 |
| R992 | 7030003440 | S.RES ERJ3GEYJ 102 V (1 k) | B | 184.5/92.1 |
| R993 | 7030003440 | S.RES ERJ3GEYJ 102 V (1 k) | B | 185.5/83.5 |
| R994 | 7030003440 | S.RES ERJ3GEYJ 102 V (1 k) | B | 186.5/92.1 |
| R995 | 7030003440 | S.RES ERJ3GEYJ 102 V (1 k) | B | 187.5/83.5 |
| R996 | 7030003200 | S.RES ERJ3GEYJ 100 V (10) | B | 220.6/95.6 |
| R998 | 7030003440 | S.RES ERJ3GEYJ 102 V (1 k) | B | 190.5/92.1 |
| R999 | 7030003440 | S.RES ERJ3GEYJ 102 V (1 k) | B | 191.5/83.5 |
| R1000 | 7030003440 | S.RES ERJ3GEYJ 102 V (1 k) | B | 192.5/92.1 |
| R1003 | 7030003200 | S.RES ERJ3GEYJ 100 V (10) | B | 231.3/83 |
| R1004 | 7030003200 | S.RES ERJ3GEYJ 100 V (10) | B | 225.9/82.7 |
| R1005 | 7030003200 | S.RES ERJ3GEYJ 100 V (10) | B | 231.3/81 |
| R1006 | 7030003200 | S.RES ERJ3GEYJ 100 V (10) | B | 222.7/80 |
| R1007 | 7030003200 | S.RES ERJ3GEYJ 100 V (10) | B | 231.3/79 |
| R1008 | 7030003200 | S.RES ERJ3GEYJ 100 V (10) | B | 222.7/48.5 |
| R1009 | 7030003200 | S.RES ERJ3GEYJ 100 V (10) | B | 231.3/49.5 |
| R1010 | 7030003200 | S.RES ERJ3GEYJ 100 V (10) | B | 222.7/52.5 |
| R1011 | 7030003200 | S.RES ERJ3GEYJ 100 V (10) | B | 231.3/53.5 |
| R1012 | 7030003200 | S.RES ERJ3GEYJ 100 V (10) | B | 222.7/56.5 |
| R1013 | 7030003200 | S.RES ERJ3GEYJ 100 V (10) | B | 231.3/57.5 |
| R1014 | 7030003200 | S.RES ERJ3GEYJ 100 V (10) | B | 222.7/58.5 |
| R1015 | 7030003200 | S.RES ERJ3GEYJ 100 V (10) | B | 231.3/59.5 |
| R1016 | 7030003200 | S.RES ERJ3GEYJ 100 V (10) | T | 181/22.1 |
| R1017 | 7030003200 | S.RES ERJ3GEYJ 100 V (10) | T | 179.7/22.1 |
| R1018 | 7030003200 | S.RES ERJ3GEYJ 100 V (10) | T | 176.7/22.1 |
| R1019 | 7030003200 | S.RES ERJ3GEYJ 100 V (10) | T | 174.7/22.2 |
| R1020 | 7030003200 | S.RES ERJ3GEYJ 100 V (10) | T | 173.4/22.2 |
| R1021 | 7030003200 | S.RES ERJ3GEYJ 100 V (10) | T | 172.1/22.2 |
| R1022 | 7030003200 | S.RES ERJ3GEYJ 100 V (10) | T | 170.8/22.2 |
| R1023 | 7030003200 | S.RES ERJ3GEYJ 100 V (10) | T | 169.5/22.2 |
| R1024 | 7030003200 | S.RES ERJ3GEYJ 100 V (10) | B | 220.7/85 |
| R1025 | 7030003320 | S.RES ERJ3GEYJ 101 V (100) | B | 120.5/9.7 |
| R1026 | 7030003320 | S.RES ERJ3GEYJ 101 V (100) | B | 108.9/8.1 |
| R1027 | 7030003320 | S.RES ERJ3GEYJ 101 V (100) | B | 137.3/17.2 |
| R1028 | 7030003320 | S.RES ERJ3GEYJ 101 V (100) | B | 135.6/7.2 |
| R1029 | 7030003520 | S.RES ERJ3GEYJ 472 V (4.7 k) | B | 120.5/11 |
| R1030 | 7030003520 | S.RES ERJ3GEYJ 472 V (4.7 k) | B | 120.5/7.1 |

M.=Mounted side (T: Mounted on the Top side, B: Mounted on the Bottom side)
S.=Surface mount

## [LOGIC UNIT]

| REF NO. | ORDER NO. | DESCRIPTION | M. | H/V LOCATION |
|---|---|---|---|---|
| R1031 | 7030003520 | S.RES ERJ3GEYJ 472 V (4.7 k) | B | 108.9/12 |
| R1032 | 7030003520 | S.RES ERJ3GEYJ 472 V (4.7 k) | B | 108.9/9.4 |
| R1033 | 7030003860 | S.RES ERJ3GE JPW V | T | 188.9/62.5 |
| R1035 | 7030003540 | S.RES ERJ3GEYJ 682 V (6.8 k) | B | 192.2/60.1 |
| R1036 | 7030003540 | S.RES ERJ3GEYJ 682 V (6.8 k) | B | 184.5/64.7 |
| R1041 | 7030003520 | S.RES ERJ3GEYJ 472 V (4.7 k) | B | 173.8/28.2 |
| R1042 | 7030003550 | S.RES ERJ3GEYJ 822 V (8.2 k) | T | 115.2/16.6 |
| R1052 | 7030008240 | S.RES ERJ12Y0R00U | T | 86.1/114.3 |
| R1053 | 7030008240 | S.RES ERJ12Y0R00U | T | 67.5/114.4 |
| R1054 | 7030008240 | S.RES ERJ12Y0R00U | T | 9.4/116.7 |
| R1056 | 7030003860 | S.RES ERJ3GE JPW V | T | 138.7/40.3 |
| R1057 | 7030003860 | S.RES ERJ3GE JPW V | B | 123.1/7.1 |
| R1101 | 7030003280 | S.RES ERJ3GEYJ 470 V (47) | T | 18.7/30.5 |
| R1102 | 7030003280 | S.RES ERJ3GEYJ 470 V (47) | T | 18.7/33.1 |
| R1103 | 7030003280 | S.RES ERJ3GEYJ 470 V (47) | T | 18.7/35.7 |
| R1104 | 7030003280 | S.RES ERJ3GEYJ 470 V (47) | T | 20.5/30.5 |
| R1105 | 7030003280 | S.RES ERJ3GEYJ 470 V (47) | T | 20.5/33.1 |
| R1106 | 7030003280 | S.RES ERJ3GEYJ 470 V (47) | T | 20.5/35.7 |
| R1107 | 7030003280 | S.RES ERJ3GEYJ 470 V (47) | T | 22.3/30.5 |
| R1108 | 7030003280 | S.RES ERJ3GEYJ 470 V (47) | T | 22.3/33.1 |
| R1109 | 7030003280 | S.RES ERJ3GEYJ 470 V (47) | T | 22.3/35.7 |
| R1110 | 7030003280 | S.RES ERJ3GEYJ 470 V (47) | T | 24.1/27.9 |
| R1111 | 7030003280 | S.RES ERJ3GEYJ 470 V (47) | T | 24.1/30.5 |
| R1112 | 7030003280 | S.RES ERJ3GEYJ 470 V (47) | T | 24.1/33.1 |
| R1113 | 7030003280 | S.RES ERJ3GEYJ 470 V (47) | T | 25.9/27.9 |
| R1114 | 7030003280 | S.RES ERJ3GEYJ 470 V (47) | T | 25.9/30.5 |
| R1115 | 7030003280 | S.RES ERJ3GEYJ 470 V (47) | T | 25.9/33.1 |
| R1116 | 7030003280 | S.RES ERJ3GEYJ 470 V (47) | T | 27.3/30.5 |
| R1117 | 7030003280 | S.RES ERJ3GEYJ 470 V (47) | T | 28.6/30.5 |
| R1118 | 7030003280 | S.RES ERJ3GEYJ 470 V (47) | T | 29.9/30.5 |
| R1119 | 7030003280 | S.RES ERJ3GEYJ 470 V (47) | T | 31.2/30.5 |
| R1120 | 7030003280 | S.RES ERJ3GEYJ 470 V (47) | T | 32.5/30.5 |
| R1121 | 7030003280 | S.RES ERJ3GEYJ 470 V (47) | T | 33.8/30.5 |
| R1122 | 7030003280 | S.RES ERJ3GEYJ 470 V (47) | T | 35.1/30.5 |
| R1123 | 7030003280 | S.RES ERJ3GEYJ 470 V (47) | T | 40.5/29.6 |
| R1124 | 7030003280 | S.RES ERJ3GEYJ 470 V (47) | T | 42.8/34.8 |
| R1125 | 7030003280 | S.RES ERJ3GEYJ 470 V (47) | T | 43.5/32.2 |
| R1126 | 7030003280 | S.RES ERJ3GEYJ 470 V (47) | T | 44.2/34.8 |
| R1127 | 7030003280 | S.RES ERJ3GEYJ 470 V (47) | T | 44.9/32.2 |
| R1128 | 7030003280 | S.RES ERJ3GEYJ 470 V (47) | T | 45.6/34.8 |
| R1129 | 7030003280 | S.RES ERJ3GEYJ 470 V (47) | T | 46.3/32.2 |
| R1130 | 7030003280 | S.RES ERJ3GEYJ 470 V (47) | T | 47/34.8 |
| R1131 | 7030003280 | S.RES ERJ3GEYJ 470 V (47) | T | 47.7/32.2 |
| R1132 | 7030003280 | S.RES ERJ3GEYJ 470 V (47) | T | 48.4/34.8 |
| R1133 | 7030003280 | S.RES ERJ3GEYJ 470 V (47) | T | 49.1/32.2 |
| R1134 | 7030003280 | S.RES ERJ3GEYJ 470 V (47) | T | 49.8/34.8 |
| R1135 | 7030003280 | S.RES ERJ3GEYJ 470 V (47) | T | 50.5/32.2 |
| R1136 | 7030003280 | S.RES ERJ3GEYJ 470 V (47) | T | 51.2/34.8 |
| R1137 | 7030003280 | S.RES ERJ3GEYJ 470 V (47) | T | 51.9/32.2 |
| R1138 | 7030003280 | S.RES ERJ3GEYJ 470 V (47) | T | 52.6/34.8 |
| R1139 | 7030003280 | S.RES ERJ3GEYJ 470 V (47) | T | 53.3/32.2 |
| R1140 | 7030003280 | S.RES ERJ3GEYJ 470 V (47) | T | 54/34.8 |
| R1141 | 7030003280 | S.RES ERJ3GEYJ 470 V (47) | T | 54.7/32.2 |
| R1142 | 7030003280 | S.RES ERJ3GEYJ 470 V (47) | T | 55.4/34.8 |
| R1143 | 7030003280 | S.RES ERJ3GEYJ 470 V (47) | T | 56.1/32.2 |
| R1144 | 7030003280 | S.RES ERJ3GEYJ 470 V (47) | T | 56.8/34.8 |
| R1145 | 7030003280 | S.RES ERJ3GEYJ 470 V (47) | T | 57.5/32.2 |
| R1146 | 7030003280 | S.RES ERJ3GEYJ 470 V (47) | T | 58.2/34.8 |
| R1151 | 7030003290 | S.RES ERJ3GEYJ 560 V (56) | T | 205.2/11.7 |
| R1152 | 7030003320 | S.RES ERJ3GEYJ 101 V (100) | T | 203.6/11.7 |
| R1153 | 7030003320 | S.RES ERJ3GEYJ 101 V (100) | T | 200.8/13.2 |
| R1154 | 7030003320 | S.RES ERJ3GEYJ 101 V (100) | T | 199.5/13.2 |
| R1155 | 7030003320 | S.RES ERJ3GEYJ 101 V (100) | B | 201.4/10.8 |
| R1156 | 7030003320 | S.RES ERJ3GEYJ 101 V (100) | T | 198.2/13.2 |
| R1157 | 7030003320 | S.RES ERJ3GEYJ 101 V (100) | B | 200.1/10.8 |
| R1158 | 7030003320 | S.RES ERJ3GEYJ 101 V (100) | T | 196.9/13.2 |
| R1159 | 7030003320 | S.RES ERJ3GEYJ 101 V (100) | B | 198.8/10.8 |
| R1160 | 7030003320 | S.RES ERJ3GEYJ 101 V (100) | T | 195.6/13.2 |
| R1161 | 7030003320 | S.RES ERJ3GEYJ 101 V (100) | B | 197.5/10.8 |
| R1162 | 7030003320 | S.RES ERJ3GEYJ 101 V (100) | B | 196.2/10.8 |
| R1163 | 7030003320 | S.RES ERJ3GEYJ 101 V (100) | T | 194.3/13.2 |
| R1164 | 7030003320 | S.RES ERJ3GEYJ 101 V (100) | T | 193/13.2 |
| R1165 | 7030003320 | S.RES ERJ3GEYJ 101 V (100) | T | 191.1/14.9 |
| R1166 | 7030003320 | S.RES ERJ3GEYJ 101 V (100) | T | 189.8/14.9 |
| R1167 | 7030003320 | S.RES ERJ3GEYJ 101 V (100) | T | 188.5/14.9 |
| R1168 | 7030003320 | S.RES ERJ3GEYJ 101 V (100) | T | 187.2/14.9 |
| R1169 | 7030003320 | S.RES ERJ3GEYJ 101 V (100) | T | 185.9/14.9 |
| R1170 | 7030003320 | S.RES ERJ3GEYJ 101 V (100) | T | 181.4/9.5 |
| | | | | |
| C1 | 4030011600 | S.CER C1608 JB 1E 104K-T | B | 69.7/83.3 |
| C2 | 4030011600 | S.CER C1608 JB 1E 104K-T | B | 68.1/83.3 |
| C3 | 4030011600 | S.CER C1608 JB 1E 104K-T | B | 63.3/83.3 |
| C4 | 4030011600 | S.CER C1608 JB 1E 104K-T | B | 59.3/83.3 |
| C5 | 4030011600 | S.CER C1608 JB 1E 104K-T | B | 48.9/83.3 |
| C6 | 4030011600 | S.CER C1608 JB 1E 104K-T | B | 66.9/100.4 |
| C7 | 4030011600 | S.CER C1608 JB 1E 104K-T | B | 62.1/100.4 |
| C8 | 4030011600 | S.CER C1608 JB 1E 104K-T | T | 69.7/107.5 |
| C9 | 4030011600 | S.CER C1608 JB 1E 104K-T | T | 68.1/107.5 |
| C10 | 4030011600 | S.CER C1608 JB 1E 104K-T | T | 63.3/107.5 |
| C11 | 4030011600 | S.CER C1608 JB 1E 104K-T | T | 59.3/107.5 |
| C12 | 4030011600 | S.CER C1608 JB 1E 104K-T | T | 48.9/107.5 |
| C13 | 4030011600 | S.CER C1608 JB 1E 104K-T | T | 66.6/90.9 |
| C14 | 4030011600 | S.CER C1608 JB 1E 104K-T | T | 61.9/90.9 |
| C51 | 4030011600 | S.CER C1608 JB 1E 104K-T | B | 105.5/54.7 |
| C52 | 4030011600 | S.CER C1608 JB 1E 104K-T | B | 97.1/46.1 |
| C53 | 4030011600 | S.CER C1608 JB 1E 104K-T | B | 94.4/46.1 |
| C54 | 4030011600 | S.CER C1608 JB 1E 104K-T | B | 106.6/51 |
| C55 | 4030011600 | S.CER C1608 JB 1E 104K-T | B | 109/65.9 |
| C56 | 4030011600 | S.CER C1608 JB 1E 104K-T | B | 114/65.9 |
| C57 | 4030011600 | S.CER C1608 JB 1E 104K-T | B | 127.6/63.1 |
| C58 | 4030011600 | S.CER C1608 JB 1E 104K-T | B | 127.7/55.9 |
| C59 | 4030011600 | S.CER C1608 JB 1E 104K-T | B | 117.5/46.1 |
| C60 | 4030011600 | S.CER C1608 JB 1E 104K-T | B | 111.5/46.1 |

## [LOGIC UNIT]

| REF NO. | ORDER NO. | DESCRIPTION | M. | H/V LOCATION |
|---|---|---|---|---|
| C61 | 4030009990 | S.CER C1608 CH 1H 200J-T | T | 143/78.1 |
| C62 | 4030011600 | S.CER C1608 JB 1E 104K-T | T | 139.9/100.6 |
| C63 | 4030008890 | S.CER C1608 JB 1H 273K-T | T | 144.5/100.6 |
| C64 | 4030011600 | S.CER C1608 JB 1E 104K-T | T | 146.7/102.5 |
| C65 | 4030011600 | S.CER C1608 JB 1E 104K-T | T | 96/34.2 |
| C66 | 4030011600 | S.CER C1608 JB 1E 104K-T | B | 34.1/27.4 |
| C101 | 4030011600 | S.CER C1608 JB 1E 104K-T | T | 23.3/71.9 |
| C102 | 4030011600 | S.CER C1608 JB 1E 104K-T | B | 43.2/48.2 |
| C103 | 4030011600 | S.CER C1608 JB 1E 104K-T | B | 47.1/78 |
| C104 | 4030011600 | S.CER C1608 JB 1E 104K-T | B | 46.8/58.8 |
| C105 | 4030011600 | S.CER C1608 JB 1E 104K-T | B | 49.5/71 |
| C106 | 4030011600 | S.CER C1608 JB 1E 104K-T | B | 46.8/57.5 |
| C107 | 4030011600 | S.CER C1608 JB 1E 104K-T | B | 52/57.5 |
| C108 | 4030011600 | S.CER C1608 JB 1E 104K-T | B | 57.7/57.5 |
| C109 | 4030011600 | S.CER C1608 JB 1E 104K-T | B | 59.6/60.8 |
| C110 | 4030011600 | S.CER C1608 JB 1E 104K-T | B | 46.8/68 |
| C111 | 4550007520 | S.TAN F931A106MAABMA | B | 57.7/48.8 |
| C112 | 4030011600 | S.CER C1608 JB 1E 104K-T | B | 59/50.5 |
| C113 | 4550007520 | S.TAN F931A106MAABMA | B | 63.6/48.8 |
| C114 | 4030011600 | S.CER C1608 JB 1E 104K-T | B | 62/50.5 |
| C115 | 4550007520 | S.TAN F931A106MAABMA | B | 68.8/48.8 |
| C116 | 4030011600 | S.CER C1608 JB 1E 104K-T | B | 64.9/50.5 |
| C117 | 4030011600 | S.CER C1608 JB 1E 104K-T | B | 46.9/71 |
| C118 | 4030011600 | S.CER C1608 JB 1E 104K-T | B | 46.8/61.4 |
| C119 | 4030011600 | S.CER C1608 JB 1E 104K-T | B | 46.8/69.3 |
| C120 | 4030011600 | S.CER C1608 JB 1E 104K-T | B | 59.6/69.4 |
| C121 | 4030011600 | S.CER C1608 JB 1E 104K-T | B | 57.8/70.2 |
| C122 | 4030011600 | S.CER C1608 JB 1E 104K-T | B | 56.5/70.2 |
| C123 | 4030006860 | S.CER C1608 JB 1H 102K-T | B | 57.3/78 |
| C124 | 4030011600 | S.CER C1608 JB 1E 104K-T | B | 52.1/71 |
| C125 | 4030011600 | S.CER C1608 JB 1E 104K-T | B | 54.7/71 |
| C126 | 4030011600 | S.CER C1608 JB 1E 104K-T | B | 46.8/66.7 |
| C127 | 4030011600 | S.CER C1608 JB 1E 104K-T | B | 43.2/50.8 |
| C128 | 4030011600 | S.CER C1608 JB 1E 104K-T | B | 52.2/50.8 |
| C129 | 4030011600 | S.CER C1608 JB 1E 104K-T | B | 46.1/64.8 |
| C130 | 4030011600 | S.CER C1608 JB 1E 104K-T | B | 59.6/66.8 |
| C131 | 4030011600 | S.CER C1608 JB 1E 104K-T | B | 66.4/68.7 |
| C132 | 4030011600 | S.CER C1608 JB 1E 104K-T | B | 59.6/63.6 |
| C133 | 4030011600 | S.CER C1608 JB 1E 104K-T | B | 47.1/50.9 |
| C134 | 4030011600 | S.CER C1608 JB 1E 104K-T | B | 39.3/58.6 |
| C135 | 4030011600 | S.CER C1608 JB 1E 104K-T | B | 46.8/60.1 |
| C136 | 4030011600 | S.CER C1608 JB 1E 104K-T | B | 54.6/57.5 |
| C137 | 4030011600 | S.CER C1608 JB 1E 104K-T | B | 49.4/57.5 |
| C138 | 4030011600 | S.CER C1608 JB 1E 104K-T | B | 54.7/69.3 |
| C139 | 4030011600 | S.CER C1608 JB 1E 104K-T | B | 59.6/58.2 |
| C140 | 4030006900 | S.CER C1608 JB 1H 103K-T | B | 66.4/58.5 |
| C141 | 4030011600 | S.CER C1608 JB 1E 104K-T | T | 64.3/38.6 |
| C142 | 4030011600 | S.CER C1608 JB 1E 104K-T | T | 76.8/32.5 |
| C144 | 4030011600 | S.CER C1608 JB 1E 104K-T | T | 7.9/62.8 |
| C145 | 4030011600 | S.CER C1608 JB 1E 104K-T | T | 10/62.1 |
| C146 | 4030007020 | S.CER C1608 CH 1H 120J-T | T | 8.1/58.8 |
| C147 | 4030007020 | S.CER C1608 CH 1H 120J-T | T | 10/59.5 |
| C148 | 4030011600 | S.CER C1608 JB 1E 104K-T | T | 6.7/70.5 |
| C149 | 4030011600 | S.CER C1608 JB 1E 104K-T | T | 7.4/73.7 |
| C201 | 4030011600 | S.CER C1608 JB 1E 104K-T | B | 118.1/103.3 |
| C202 | 4030011600 | S.CER C1608 JB 1E 104K-T | B | 120.7/103.3 |
| C203 | 4030011600 | S.CER C1608 JB 1E 104K-T | B | 124.2/103.3 |
| C204 | 4030011600 | S.CER C1608 JB 1E 104K-T | B | 127.3/103.3 |
| C205 | 4030011600 | S.CER C1608 JB 1E 104K-T | B | 137.4/103.5 |
| C206 | 4030011600 | S.CER C1608 JB 1E 104K-T | B | 120.7/87.6 |
| C207 | 4030011600 | S.CER C1608 JB 1E 104K-T | B | 125.5/87.7 |
| C208 | 4030011600 | S.CER C1608 JB 1E 104K-T | B | 117.7/85.8 |
| C209 | 4030011600 | S.CER C1608 JB 1E 104K-T | B | 119.2/85.8 |
| C210 | 4030011600 | S.CER C1608 JB 1E 104K-T | B | 124/85.8 |
| C211 | 4030011600 | S.CER C1608 JB 1E 104K-T | B | 128/85.8 |
| C212 | 4030011600 | S.CER C1608 JB 1E 104K-T | B | 138.4/85.8 |
| C213 | 4030011600 | S.CER C1608 JB 1E 104K-T | B | 120.7/70 |
| C214 | 4030011600 | S.CER C1608 JB 1E 104K-T | B | 124.1/70 |
| C215 | 4030011600 | S.CER C1608 JB 1E 104K-T | B | 89.4/90.4 |
| C216 | 4030011600 | S.CER C1608 JB 1E 104K-T | B | 85.6/71.6 |
| C217 | 4030011600 | S.CER C1608 JB 1E 104K-T | B | 91.5/79.6 |
| C218 | 4030011600 | S.CER C1608 JB 1E 104K-T | B | 92.1/72.6 |
| C219 | 4030011600 | S.CER C1608 JB 1E 104K-T | B | 94.7/72.6 |
| C220 | 4030011600 | S.CER C1608 JB 1E 104K-T | B | 90.8/72.6 |
| C221 | 4030011600 | S.CER C1608 JB 1E 104K-T | B | 96.6/66.6 |
| C222 | 4030011600 | S.CER C1608 JB 1E 104K-T | B | 94.4/89.4 |
| C223 | 4030011600 | S.CER C1608 JB 1E 104K-T | B | 90.8/83.4 |
| C224 | 4030011600 | S.CER C1608 JB 1E 104K-T | B | 85.6/83.7 |
| C225 | 4030011600 | S.CER C1608 JB 1E 104K-T | B | 91.5/77 |
| C226 | 4030011600 | S.CER C1608 JB 1E 104K-T | B | 91.5/75.7 |
| C227 | 4030011600 | S.CER C1608 JB 1E 104K-T | B | 96.7/72.6 |
| C228 | 4030011600 | S.CER C1608 JB 1E 104K-T | B | 91.5/74.4 |
| C229 | 4030011600 | S.CER C1608 JB 1E 104K-T | B | 100.6/89.4 |
| C230 | 4030011600 | S.CER C1608 JB 1E 104K-T | B | 97.3/83.2 |
| C231 | 4030011600 | S.CER C1608 JB 1E 104K-T | B | 102.5/83.6 |
| C232 | 4030011600 | S.CER C1608 JB 1E 104K-T | B | 91.5/80.9 |
| C233 | 4030011600 | S.CER C1608 JB 1E 104K-T | B | 102.5/77.1 |
| C234 | 4030011600 | S.CER C1608 JB 1E 104K-T | B | 99.3/72.6 |
| C235 | 4030011600 | S.CER C1608 JB 1E 104K-T | B | 102.2/66.4 |
| C236 | 4030011600 | S.CER C1608 JB 1E 104K-T | B | 102.5/82.3 |
| C237 | 4030011600 | S.CER C1608 JB 1E 104K-T | B | 102.5/81 |
| C238 | 4030011600 | S.CER C1608 JB 1E 104K-T | B | 102.5/79.7 |
| C239 | 4030011600 | S.CER C1608 JB 1E 104K-T | B | 85.6/81.1 |
| C240 | 4030011600 | S.CER C1608 JB 1E 104K-T | B | 102.5/75.8 |
| C241 | 4030011600 | S.CER C1608 JB 1E 104K-T | B | 102.5/74.5 |
| C242 | 4030011600 | S.CER C1608 JB 1E 104K-T | B | 103.2/72.6 |
| C243 | 4030011600 | S.CER C1608 JB 1E 104K-T | B | 101.9/72.6 |
| C244 | 4030011600 | S.CER C1608 JB 1E 104K-T | B | 91.5/78.3 |
| C245 | 4030011600 | S.CER C1608 JB 1E 104K-T | B | 92.1/83.2 |
| C246 | 4030011600 | S.CER C1608 JB 1E 104K-T | B | 102.5/78.4 |
| C247 | 4030011600 | S.CER C1608 JB 1E 104K-T | B | 99.3/83.2 |
| C248 | 4030011600 | S.CER C1608 JB 1E 104K-T | B | 100.6/72.6 |
| C249 | 4030011600 | S.CER C1608 JB 1E 104K-T | B | 93.4/72.6 |
| C250 | 4030007050 | S.CER C1608 CH 1H 220J-T | T | 101/91.3 |

M.=Mounted side (T: Mounted on the Top side, B: Mounted on the Bottom side)
S.=Surface mount

## [LOGIC UNIT]

| REF NO. | ORDER NO. | DESCRIPTION | M. | H/V LOCATION |
|---|---|---|---|---|
| C251 | 4030007050 | S.CER C1608 CH 1H 220J-T | T | 98.4/91.3 |
| C252 | 4030006990 | S.CER C1608 CH 1H 080D-T | T | 98.9/63.9 |
| C253 | 4030006990 | S.CER C1608 CH 1H 080D-T | T | 101.5/63.9 |
| C254 | 4030006900 | S.CER C1608 JB 1H 103K-T | T | 83.7/84.6 |
| C255 | 4510008520 | S.ELE EEE1CA470SP | T | 101.3/100.8 |
| C256 | 4030006900 | S.CER C1608 JB 1H 103K-T | T | 83/64.1 |
| C257 | 4510007130 | S.ELE EEFCD 0J 470R | T | 78.5/66.3 |
| C258 | 4030011600 | S.CER C1608 JB 1E 104K-T | T | 84.9/61 |
| C259 | 4030011600 | S.CER C1608 JB 1E 104K-T | B | 85.6/76.9 |
| C260 | 4030011600 | S.CER C1608 JB 1E 104K-T | T | 214.2/33 |
| C261 | 4030011600 | S.CER C1608 JB 1E 104K-T | T | 214.2/31.7 |
| C262 | 4030011600 | S.CER C1608 JB 1E 104K-T | T | 214.2/29.7 |
| C263 | 4030011600 | S.CER C1608 JB 1E 104K-T | T | 214.2/28.4 |
| C264 | 4030011600 | S.CER C1608 JB 1E 104K-T | T | 205.4/23.2 |
| C265 | 4510008540 | S.ELE EEE1CA100SR | T | 214.2/36.7 |
| C266 | 4030011600 | S.CER C1608 JB 1E 104K-T | T | 196.3/28.7 |
| C267 | 4030007100 | S.CER C1608 CH 1H 560J-T | B | 219.4/32.5 |
| C268 | 4030007100 | S.CER C1608 CH 1H 560J-T | B | 219.4/29.5 |
| C269 | 4030007100 | S.CER C1608 CH 1H 560J-T | B | 219.4/26.5 |
| C270 | 4030007050 | S.CER C1608 CH 1H 220J-T | B | 225/32.5 |
| C271 | 4030007050 | S.CER C1608 CH 1H 220J-T | B | 225/29.5 |
| C272 | 4030007050 | S.CER C1608 CH 1H 220J-T | B | 225/26.5 |
| C273 | 4030011600 | S.CER C1608 JB 1E 104K-T | T | 194.2/16.5 |
| C274 | 4030007170 | S.CER C1608 CH 1H 221J-T | T | 203.9/16.5 |
| C275 | 4030007170 | S.CER C1608 CH 1H 221J-T | T | 203.9/19.4 |
| C276 | 4030007050 | S.CER C1608 CH 1H 220J-T | B | 217.8/9.3 |
| C277 | 4030007050 | S.CER C1608 CH 1H 220J-T | B | 220.7/9.3 |
| C278 | 4510008500 | S.ELE EEE1CA101WP | T | 223.4/38.4 |
| C279 | 4030007050 | S.CER C1608 CH 1H 220J-T | B | 227.8/9.3 |
| C280 | 4030007050 | S.CER C1608 CH 1H 220J-T | B | 230.7/9.3 |
| C281 | 4510008500 | S.ELE EEE1CA101WP | T | 223.4/30.6 |
| C282 | 4030011600 | S.CER C1608 JB 1E 104K-T | B | 215.6/39.1 |
| C283 | 4510008550 | S.ELE EEE1HA010SR | T | 217.2/42 |
| C284 | 4030011600 | S.CER C1608 JB 1E 104K-T | B | 104.6/21.2 |
| C285 | 4510008540 | S.ELE EEE1CA100SR | T | 105.6/37.4 |
| C286 | 4510008540 | S.ELE EEE1CA100SR | T | 105.6/32.6 |
| C287 | 4030011600 | S.CER C1608 JB 1E 104K-T | B | 104.6/23.2 |
| C288 | 4510008540 | S.ELE EEE1CA100SR | T | 105.6/27.8 |
| C289 | 4030011600 | S.CER C1608 JB 1E 104K-T | B | 104.6/24.5 |
| C290 | 4030011600 | S.CER C1608 JB 1E 104K-T | B | 115.5/21.2 |
| C291 | 4510008540 | S.ELE EEE1CA100SR | T | 111.7/37.4 |
| C292 | 4510008540 | S.ELE EEE1CA100SR | T | 111.7/32.6 |
| C293 | 4030011600 | S.CER C1608 JB 1E 104K-T | B | 115.5/23.2 |
| C294 | 4510008540 | S.ELE EEE1CA100SR | T | 111.7/27.8 |
| C295 | 4030011600 | S.CER C1608 JB 1E 104K-T | B | 115.5/24.5 |
| C296 | 4030011600 | S.CER C1608 JB 1E 104K-T | B | 126.3/33.9 |
| C297 | 4510008540 | S.ELE EEE1CA100SR | T | 123.9/39.8 |
| C298 | 4030011600 | S.CER C1608 JB 1E 104K-T | B | 126.3/31.3 |
| C299 | 4510008540 | S.ELE EEE1CA100SR | T | 123.9/35 |
| C300 | 4030011600 | S.CER C1608 JB 1E 104K-T | B | 114/34.6 |
| C301 | 4510008540 | S.ELE EEE1CA100SR | T | 117.8/39.8 |
| C302 | 4030011600 | S.CER C1608 JB 1E 104K-T | B | 113.3/32.5 |
| C303 | 4510008540 | S.ELE EEE1CA100SR | T | 117.8/35 |
| C401 | 4030011600 | S.CER C1608 JB 1E 104K-T | B | 28.2/61.5 |
| C402 | 4030011600 | S.CER C1608 JB 1E 104K-T | B | 22.3/61.5 |
| C403 | 4030011600 | S.CER C1608 JB 1E 104K-T | B | 8.7/53.3 |
| C404 | 4030011600 | S.CER C1608 JB 1E 104K-T | B | 8.7/45.6 |
| C405 | 4030011600 | S.CER C1608 JB 1E 104K-T | B | 20.2/35.6 |
| C406 | 4030011600 | S.CER C1608 JB 1E 104K-T | B | 25.4/35.6 |
| C407 | 4030011600 | S.CER C1608 JB 1E 104K-T | B | 29.7/35.6 |
| C408 | 4030011600 | S.CER C1608 JB 1E 104K-T | B | 38.5/42.3 |
| C409 | 4030011600 | S.CER C1608 JB 1E 104K-T | B | 38.7/47.5 |
| C410 | 4030011600 | S.CER C1608 JB 1E 104K-T | B | 38.7/51 |
| C411 | 4030011600 | S.CER C1608 JB 1E 104K-T | B | 40.9/36.2 |
| C412 | 4030006860 | S.CER C1608 JB 1H 102K-T | T | 29.3/44.7 |
| C413 | 4030006900 | S.CER C1608 JB 1H 103K-T | T | 26.7/44.7 |
| C414 | 4030007150 | S.CER C1608 CH 1H 151J-T | T | 28/44.7 |
| C415 | 4030011600 | S.CER C1608 JB 1E 104K-T | B | 15.2/30.5 |
| C416 | 4510008540 | S.ELE EEE1CA100SR | T | 13.7/28.8 |
| C417 | 4030011600 | S.CER C1608 JB 1E 104K-T | B | 15.2/31.8 |
| C418 | 4510008540 | S.ELE EEE1CA100SR | T | 13.7/33.6 |
| C419 | 4030006900 | S.CER C1608 JB 1H 103K-T | T | 36.9/26.6 |
| C420 | 4030007150 | S.CER C1608 CH 1H 151J-T | T | 36.9/25.3 |
| C421 | 4550007520 | S.TAN F931A106MAABMA | B | 19.7/26.8 |
| C422 | 4030011600 | S.CER C1608 JB 1E 104K-T | T | 20.8/66.3 |
| C423 | 4030011600 | S.CER C1608 JB 1E 104K-T | B | 35.3/85.1 |
| C424 | 4030011600 | S.CER C1608 JB 1E 104K-T | B | 38.1/77.1 |
| C425 | 4030011600 | S.CER C1608 JB 1E 104K-T | B | 34.6/71.4 |
| C426 | 4030011600 | S.CER C1608 JB 1E 104K-T | B | 34.8/67.7 |
| C427 | 4030011600 | S.CER C1608 JB 1E 104K-T | B | 26.8/62.8 |
| C428 | 4030011600 | S.CER C1608 JB 1E 104K-T | B | 20.8/62.8 |
| C429 | 4030011600 | S.CER C1608 JB 1E 104K-T | B | 18.2/62.8 |
| C430 | 4030011600 | S.CER C1608 JB 1E 104K-T | B | 9.7/81.5 |
| C431 | 4030011600 | S.CER C1608 JB 1E 104K-T | B | 12.3/72.4 |
| C432 | 4030011600 | S.CER C1608 JB 1E 104K-T | B | 12.3/79 |
| C433 | 4030011600 | S.CER C1608 JB 1E 104K-T | B | 12.3/82.2 |
| C434 | 4030011600 | S.CER C1608 JB 1E 104K-T | B | 17.2/90.2 |
| C435 | 4030011600 | S.CER C1608 JB 1E 104K-T | B | 20.8/90.2 |
| C436 | 4030011600 | S.CER C1608 JB 1E 104K-T | B | 25.7/90.2 |
| C437 | 4030011600 | S.CER C1608 JB 1E 104K-T | B | 146.1/21.2 |
| C438 | 4030011600 | S.CER C1608 JB 1E 104K-T | B | 152.6/21.2 |
| C439 | 4030011600 | S.CER C1608 JB 1E 104K-T | B | 153/18.4 |
| C440 | 4010008500 | CER DEBB33D102KA2B | | |
| C601 | 4030011600 | S.CER C1608 JB 1E 104K-T | B | 169.4/51.4 |
| C602 | 4030011600 | S.CER C1608 JB 1E 104K-T | B | 169.1/57.7 |
| C603 | 4030011600 | S.CER C1608 JB 1E 104K-T | B | 79.6/44.7 |
| C604 | 4030011600 | S.CER C1608 JB 1E 104K-T | B | 99.9/36.7 |
| C605 | 4030011600 | S.CER C1608 JB 1E 104K-T | B | 102/21.3 |
| C606 | 4030011600 | S.CER C1608 JB 1E 104K-T | B | 83.2/16.8 |
| C607 | 4030011600 | S.CER C1608 JB 1E 104K-T | B | 81.5/16.8 |
| C608 | 4510008540 | S.ELE EEE1CA100SR | T | 67/16.3 |
| C609 | 4510008540 | S.ELE EEE1CA100SR | T | 62.4/34 |
| C610 | 4030006900 | S.CER C1608 JB 1H 103K-T | B | 71.2/19.5 |
| C611 | 4030006900 | S.CER C1608 JB 1H 103K-T | B | 71.2/20.8 |

## [LOGIC UNIT]

| REF NO. | ORDER NO. | DESCRIPTION | M. | H/V LOCATION |
|---|---|---|---|---|
| C612 | 4030007010 | S.CER C1608 CH 1H 100D-T | T | 80.9/16.9 |
| C613 | 4030007010 | S.CER C1608 CH 1H 100D-T | T | 83.5/16.9 |
| C614 | 4030011600 | S.CER C1608 JB 1E 104K-T | B | 86.2/14.2 |
| C615 | 4030006880 | S.CER C1608 JB 1H 472K-T | B | 71.2/31.2 |
| C616 | 4030006880 | S.CER C1608 JB 1H 472K-T | B | 71.2/29.9 |
| C617 | 4030006880 | S.CER C1608 JB 1H 472K-T | B | 71.2/28.6 |
| C618 | 4030006880 | S.CER C1608 JB 1H 472K-T | B | 71.2/27.3 |
| C619 | 4030006880 | S.CER C1608 JB 1H 472K-T | B | 71.2/26 |
| C620 | 4030006880 | S.CER C1608 JB 1H 472K-T | B | 71.2/24.7 |
| C621 | 4030006880 | S.CER C1608 JB 1H 472K-T | B | 71.2/23.4 |
| C622 | 4030006880 | S.CER C1608 JB 1H 472K-T | B | 71.2/22.1 |
| C623 | 4510008540 | S.ELE EEE1CA100SR | T | 178.6/62.5 |
| C624 | 4030011600 | S.CER C1608 JB 1E 104K-T | T | 174.9/60.6 |
| C625 | 4510008540 | S.ELE EEE1CA100SR | T | 184.7/62.5 |
| C626 | 4030011600 | S.CER C1608 JB 1E 104K-T | B | 63.7/20.3 |
| C627 | 4030011600 | S.CER C1608 JB 1E 104K-T | B | 60/20.3 |
| C628 | 4030011600 | S.CER C1608 JB 1E 104K-T | B | 73.6/39 |
| C629 | 4030011600 | S.CER C1608 JB 1E 104K-T | B | 57.2/39.8 |
| C630 | 4030011600 | S.CER C1608 JB 1E 104K-T | B | 150.9/51.7 |
| C631 | 4030011600 | S.CER C1608 JB 1E 104K-T | B | 148.9/48.1 |
| C632 | 4030011600 | S.CER C1608 JB 1E 104K-T | B | 131.8/66 |
| C633 | 4030011600 | S.CER C1608 JB 1E 104K-T | B | 138.2/66.7 |
| C634 | 4030011600 | S.CER C1608 JB 1E 104K-T | B | 150.9/58 |
| C635 | 4030011600 | S.CER C1608 JB 1E 104K-T | B | 131.1/58.5 |
| C636 | 4030011600 | S.CER C1608 JB 1E 104K-T | B | 131.1/52.1 |
| C801 | 4510008540 | S.ELE EEE1CA100SR | T | 141/114.6 |
| C802 | 4030011600 | S.CER C1608 JB 1E 104K-T | B | 138.5/110.6 |
| C803 | 4030011600 | S.CER C1608 JB 1E 104K-T | B | 138.5/113.3 |
| C804 | 4510008520 | S.ELE EEE1CA470SP | T | 147.2/113.8 |
| C805 | 4510008870 | S.ELE EEE1AA471UP | T | 100.2/110.4 |
| C806 | 4510008870 | S.ELE EEE1AA471UP | T | 109.5/110.4 |
| C807 | 4510008870 | S.ELE EEE1AA471UP | T | 119.4/100.6 |
| C808 | 4510008870 | S.ELE EEE1AA471UP | T | 119.9/109.6 |
| C809 | 4510008560 | S.ELE EEE1HAR47SR | T | 160/65.3 |
| C810 | 4510008560 | S.ELE EEE1HAR47SR | T | 166.6/65.3 |
| C811 | 4510008560 | S.ELE EEE1HAR47SR | T | 173.2/65.3 |
| C812 | 4030006860 | S.CER C1608 JB 1H 102K-T | B | 66.8/117.7 |
| C813 | 4030006860 | S.CER C1608 JB 1H 102K-T | B | 84.9/122.3 |
| C814 | 4030006860 | S.CER C1608 JB 1H 102K-T | B | 83.6/116.9 |
| C815 | 4030006860 | S.CER C1608 JB 1H 102K-T | T | 88.8/115.9 |
| C816 | 4030006860 | S.CER C1608 JB 1H 102K-T | B | 97.3/121.4 |
| C817 | 4030006860 | S.CER C1608 JB 1H 102K-T | B | 100.6/122.1 |
| C818 | 4030006860 | S.CER C1608 JB 1H 102K-T | B | 103.1/122.1 |
| C819 | 4030006860 | S.CER C1608 JB 1H 102K-T | B | 105.6/122.1 |
| C820 | 4030006860 | S.CER C1608 JB 1H 102K-T | B | 108.8/121.4 |
| C821 | 4510008520 | S.ELE EEE1CA470SP | T | 211/16 |
| C822 | 4510008500 | S.ELE EEE1CA101WP | T | 14.3/109.4 |
| C823 | 4030006880 | S.CER C1608 JB 1H 472K-T | B | 33.9/114.5 |
| C824 | 4030006860 | S.CER C1608 JB 1H 102K-T | T | 20/24.5 |
| C825 | 4030011600 | S.CER C1608 JB 1E 104K-T | B | 20.4/107.6 |
| C826 | 4030006860 | S.CER C1608 JB 1H 102K-T | T | 122.2/118.1 |
| C827 | 4030006860 | S.CER C1608 JB 1H 102K-T | T | 117.6/118.7 |
| C828 | 4030007130 | S.CER C1608 CH 1H 101J-T | T | 118.9/118.7 |
| C829 | 4030006860 | S.CER C1608 JB 1H 102K-T | T | 127.2/116 |
| C830 | 4030007130 | S.CER C1608 CH 1H 101J-T | T | 128.5/116 |
| C831 | 4030006860 | S.CER C1608 JB 1H 102K-T | T | 130.5/115.5 |
| C832 | 4030007130 | S.CER C1608 CH 1H 101J-T | T | 130.5/116.8 |
| C833 | 4030006860 | S.CER C1608 JB 1H 102K-T | T | 133.9/116 |
| C834 | 4030007130 | S.CER C1608 CH 1H 101J-T | T | 132.6/116 |
| C835 | 4030011600 | S.CER C1608 JB 1E 104K-T | T | 127.8/110.6 |
| C836 | 4510008540 | S.ELE EEE1CA100SR | T | 127.8/106 |
| C837 | 4030011600 | S.CER C1608 JB 1E 104K-T | T | 135.7/106.8 |
| C838 | 4510008540 | S.ELE EEE1CA100SR | T | 132.6/106 |
| C850 | 4030011600 | S.CER C1608 JB 1E 104K-T | B | 165/40.9 |
| C851 | 4510008540 | S.ELE EEE1CA100SR | T | 128/31.2 |
| C852 | 4030009490 | S.CER C1608 JB 1H 821K-T | B | 142.1/11.6 |
| C853 | 4030009490 | S.CER C1608 JB 1H 821K-T | B | 142.7/14.9 |
| C855 | 4510008540 | S.ELE EEE1CA100SR | T | 117.7/29.1 |
| C856 | 4030009490 | S.CER C1608 JB 1H 821K-T | B | 134.5/17.2 |
| C857 | 4030009490 | S.CER C1608 JB 1H 821K-T | B | 131.7/19.8 |
| C859 | 4510008540 | S.ELE EEE1CA100SR | T | 123.2/29.1 |
| C860 | 4030009490 | S.CER C1608 JB 1H 821K-T | B | 136.9/7.2 |
| C861 | 4030009490 | S.CER C1608 JB 1H 821K-T | B | 140.8/7.2 |
| C865 | 4510008540 | S.ELE EEE1CA100SR | T | 119.4/22.2 |
| C866 | 4030007160 | S.CER C1608 CH 1H 181J-T | B | 121/5 |
| C867 | 4030009880 | S.CER C1608 JB 1H 682K-T | T | 115.2/17.9 |
| C868 | 4030008880 | S.CER C1608 JB 1H 223K-T | T | 115.2/15.3 |
| C869 | 4510008540 | S.ELE EEE1CA100SR | T | 109.4/16.3 |
| C871 | 4510008540 | S.ELE EEE1CA100SR | T | 104.6/16.2 |
| C873 | 4030011600 | S.CER C1608 JB 1E 104K-T | B | 120.5/8.4 |
| C874 | 4030011600 | S.CER C1608 JB 1E 104K-T | B | 108.9/10.7 |
| C875 | 4510008540 | S.ELE EEE1CA100SR | T | 114.6/22.2 |
| C876 | 4510008540 | S.ELE EEE1CA100SR | T | 119/16.3 |
| C877 | 4030011600 | S.CER C1608 JB 1E 104K-T | B | 137.3/18.5 |
| C878 | 4030011600 | S.CER C1608 JB 1E 104K-T | B | 134.3/7.2 |
| C879 | 4510008540 | S.ELE EEE1CA100SR | T | 124.2/22.2 |
| C880 | 4510008540 | S.ELE EEE1CA100SR | T | 124.2/16.3 |
| C883 | 4510008560 | S.ELE EEE1HAR47SR | T | 184.7/67.3 |
| C884 | 4510008560 | S.ELE EEE1HAR47SR | T | 180.1/71.1 |
| C901 | 4510008540 | S.ELE EEE1CA100SR | T | 183.7/50.9 |
| C902 | 4510008540 | S.ELE EEE1CA100SR | T | 188.9/50.9 |
| C903 | 4030011600 | S.CER C1608 JB 1E 104K-T | B | 186.3/50.2 |
| C904 | 4030011600 | S.CER C1608 JB 1E 104K-T | B | 193.7/57.5 |
| C905 | 4510008540 | S.ELE EEE1CA100SR | T | 188.9/57 |
| C906 | 4510008540 | S.ELE EEE1CA100SR | T | 183.7/57 |
| C907 | 4030006860 | S.CER C1608 JB 1H 102K-T | B | 170.6/40.3 |
| C908 | 4030006860 | S.CER C1608 JB 1H 102K-T | B | 171.6/37.7 |
| C909 | 4030006860 | S.CER C1608 JB 1H 102K-T | B | 173.6/37.7 |
| C910 | 4030006860 | S.CER C1608 JB 1H 102K-T | B | 175.1/28.2 |
| C911 | 4030006860 | S.CER C1608 JB 1H 102K-T | B | 176.1/30.8 |
| C912 | 4030006860 | S.CER C1608 JB 1H 102K-T | B | 177.6/37.7 |
| C913 | 4030006860 | S.CER C1608 JB 1H 102K-T | B | 178.6/40.3 |
| C914 | 4030006860 | S.CER C1608 JB 1H 102K-T | B | 179.6/37.7 |
| C915 | 4030006860 | S.CER C1608 JB 1H 102K-T | B | 180.1/30.8 |

M.=Mounted side (T: Mounted on the Top side, B: Mounted on the Bottom side)
S.=Surface mount

## [LOGIC UNIT]

| REF NO. | ORDER NO. | DESCRIPTION | | M. | H/V LOCATION |
|---|---|---|---|---|---|
| C916 | 4030006860 | S.CER | C1608 JB 1H 102K-T | B | 180.6/40.3 |
| C917 | 4030006860 | S.CER | C1608 JB 1H 102K-T | B | 181.1/28.2 |
| C918 | 4030006860 | S.CER | C1608 JB 1H 102K-T | B | 182.1/30.8 |
| C919 | 4030006860 | S.CER | C1608 JB 1H 102K-T | B | 182.6/40.3 |
| C920 | 4030006860 | S.CER | C1608 JB 1H 102K-T | B | 183.1/28.2 |
| C921 | 4030006860 | S.CER | C1608 JB 1H 102K-T | B | 183.6/37.7 |
| C922 | 4030006860 | S.CER | C1608 JB 1H 102K-T | B | 184.1/30.8 |
| C923 | 4030006860 | S.CER | C1608 JB 1H 102K-T | B | 133.7/37.7 |
| C924 | 4030006860 | S.CER | C1608 JB 1H 102K-T | B | 134.7/40.3 |
| C925 | 4030006860 | S.CER | C1608 JB 1H 102K-T | B | 135.7/37.7 |
| C926 | 4030006860 | S.CER | C1608 JB 1H 102K-T | B | 136.2/30.8 |
| C927 | 4030006860 | S.CER | C1608 JB 1H 102K-T | B | 136.7/40.3 |
| C928 | 4030006860 | S.CER | C1608 JB 1H 102K-T | B | 137.2/25.5 |
| C929 | 4030006860 | S.CER | C1608 JB 1H 102K-T | B | 137.7/37.7 |
| C930 | 4030006860 | S.CER | C1608 JB 1H 102K-T | B | 138.2/28.1 |
| C931 | 4030006860 | S.CER | C1608 JB 1H 102K-T | B | 138.7/40.3 |
| C932 | 4030006860 | S.CER | C1608 JB 1H 102K-T | B | 139.2/25.5 |
| C933 | 4030006860 | S.CER | C1608 JB 1H 102K-T | B | 139.7/37.7 |
| C934 | 4030006860 | S.CER | C1608 JB 1H 102K-T | B | 140.2/28.1 |
| C935 | 4030006860 | S.CER | C1608 JB 1H 102K-T | B | 140.7/40.3 |
| C936 | 4030006860 | S.CER | C1608 JB 1H 102K-T | B | 141.2/25.5 |
| C937 | 4030006860 | S.CER | C1608 JB 1H 102K-T | B | 141.7/37.7 |
| C938 | 4030006860 | S.CER | C1608 JB 1H 102K-T | B | 142.2/22.9 |
| C939 | 4030006860 | S.CER | C1608 JB 1H 102K-T | B | 142.7/40.3 |
| C940 | 4030006860 | S.CER | C1608 JB 1H 102K-T | B | 143.2/25.5 |
| C941 | 4030006860 | S.CER | C1608 JB 1H 102K-T | B | 144.2/22.9 |
| C942 | 4030006860 | S.CER | C1608 JB 1H 102K-T | B | 146.2/30.8 |
| C943 | 4030006860 | S.CER | C1608 JB 1H 102K-T | B | 147.2/28.3 |
| C944 | 4030006860 | S.CER | C1608 JB 1H 102K-T | B | 148.2/30.9 |
| C945 | 4030006860 | S.CER | C1608 JB 1H 102K-T | B | 150.2/28.3 |
| C946 | 4030006860 | S.CER | C1608 JB 1H 102K-T | B | 151.2/30.9 |
| C947 | 4030006860 | S.CER | C1608 JB 1H 102K-T | B | 214.5/84.7 |
| C948 | 4030006860 | S.CER | C1608 JB 1H 102K-T | B | 220.6/81.7 |
| C949 | 4030006860 | S.CER | C1608 JB 1H 102K-T | B | 223/91.7 |
| C950 | 4030006860 | S.CER | C1608 JB 1H 102K-T | B | 220.6/94.3 |
| C951 | 4030006860 | S.CER | C1608 JB 1H 102K-T | B | 214.5/92.7 |
| C952 | 4030006860 | S.CER | C1608 JB 1H 102K-T | B | 213.6/72.3 |
| C953 | 4030006860 | S.CER | C1608 JB 1H 102K-T | B | 211.5/76.1 |
| C954 | 4030006860 | S.CER | C1608 JB 1H 102K-T | B | 205.7/77.8 |
| C955 | 4030006860 | S.CER | C1608 JB 1H 102K-T | B | 211.5/79.5 |
| C956 | 4030006860 | S.CER | C1608 JB 1H 102K-T | T | 21/113.9 |
| C957 | 4030006860 | S.CER | C1608 JB 1H 102K-T | T | 24/113.9 |
| C958 | 4030006860 | S.CER | C1608 JB 1H 102K-T | T | 27/113.9 |
| C959 | 4030006860 | S.CER | C1608 JB 1H 102K-T | T | 30/113.8 |
| C960 | 4030006860 | S.CER | C1608 JB 1H 102K-T | B | 180.6/79.6 |
| C961 | 4030006860 | S.CER | C1608 JB 1H 102K-T | B | 183.2/90.3 |
| C962 | 4030006860 | S.CER | C1608 JB 1H 102K-T | B | 187.7/90.3 |
| C963 | 4030006860 | S.CER | C1608 JB 1H 102K-T | B | 188.7/81.7 |
| C964 | 4030006860 | S.CER | C1608 JB 1H 102K-T | B | 193/81.7 |
| C965 | 4030006860 | S.CER | C1608 JB 1H 102K-T | B | 193.7/90.3 |
| C966 | 4030006860 | S.CER | C1608 JB 1H 102K-T | B | 194.9/78.8 |
| C967 | 4030006860 | S.CER | C1608 JB 1H 102K-T | B | 222.7/78.7 |
| C968 | 4030006860 | S.CER | C1608 JB 1H 102K-T | B | 228.7/79 |
| C969 | 4030006860 | S.CER | C1608 JB 1H 102K-T | B | 222/74.4 |
| C970 | 4030006860 | S.CER | C1608 JB 1H 102K-T | B | 229.9/74.4 |
| C971 | 4030006860 | S.CER | C1608 JB 1H 102K-T | B | 220.9/49.2 |
| C972 | 4030006860 | S.CER | C1608 JB 1H 102K-T | B | 229.5/50.2 |
| C973 | 4030006860 | S.CER | C1608 JB 1H 102K-T | B | 227.1/62.2 |
| C974 | 4030006860 | S.CER | C1608 JB 1H 102K-T | B | 218.4/63.2 |
| C975 | 4030006860 | S.CER | C1608 JB 1H 102K-T | B | 227.1/66.7 |
| C976 | 4030006860 | S.CER | C1608 JB 1H 102K-T | B | 218.4/68.1 |
| C977 | 4030006860 | S.CER | C1608 JB 1H 102K-T | T | 181.7/23.9 |
| C978 | 4030006860 | S.CER | C1608 JB 1H 102K-T | T | 159.4/23.6 |
| C979 | 4030006860 | S.CER | C1608 JB 1H 102K-T | T | 190.4/18.9 |
| C980 | 4030006860 | S.CER | C1608 JB 1H 102K-T | T | 188.7/24.5 |
| C981 | 4030006860 | S.CER | C1608 JB 1H 102K-T | T | 166.1/22.6 |
| C982 | 4030006860 | S.CER | C1608 JB 1H 102K-T | T | 173.3/42.7 |
| C983 | 4030011600 | S.CER | C1608 JB 1E 104K-T | T | 180.7/84.3 |
| C984 | 4030010210 | S.CER | C3216 JB 1C 105M-T | B | 198.6/85.6 |
| C985 | 4030011600 | S.CER | C1608 JB 1E 104K-T | T | 195.5/83.6 |
| C991 | 4030006880 | S.CER | C1608 JB 1H 472K-T | T | 208.4/92 |
| C992 | 4030006880 | S.CER | C1608 JB 1H 472K-T | T | 208.4/94 |
| C993 | 4030006880 | S.CER | C1608 JB 1H 472K-T | T | 220.2/93 |
| C994 | 4030006880 | S.CER | C1608 JB 1H 472K-T | T | 220.2/81.4 |
| C995 | 4030006880 | S.CER | C1608 JB 1H 472K-T | T | 208.3/80 |
| C996 | 4030006880 | S.CER | C1608 JB 1H 472K-T | T | 220.2/78.6 |
| C997 | 4030006880 | S.CER | C1608 JB 1H 472K-T | T | 218.4/73.2 |
| J1 | 6510022490 | S.CNR | AXK5S30045P | T | 40/98 |
| J2 | 6510019870 | S.CNR | AXK5S40045P | T | 85/98 |
| J51 | 6910014251 | CNR | IMSA-9202B-2-06Z041-PT1 | | |
| J102 | 6510019981 | S.CNR | 52808-1671 (1690) | T | 72.5/40 |
| J602 | 6510019971 | S.CNR | 52808-1071 | T | 95.5/14.5 |
| J604 | 6510019971 | S.CNR | 52808-1071 | T | 72.5/23 |
| J802 | 6510024261 | S.CNR | S9B-PH-SM4-TB (LF) (SN) | T | 158.5/5 |
| J803 | 6510024401 | CNR | S11B-EH (LF) (SN) | | |
| J804 | 6510024251 | S.CNR | S5B-PH-SM4-TB (LF) (SN) | T | 213.2/5 |
| J805 | 6510024111 | S.CNR | 52793-2070 (2090) | T | 129.5/123.9 |
| J806 | 6510024131 | S.CNR | IMSA-9637S-40Y905 | T | 193/4.7 |
| J807 | 6510024151 | S.CNR | 50FY-BMT-TB (LF) (SN) | T | 53.6/22 |
| J808 | 6510022471 | S.CNR | 40FLT-SM2-TB (LF) (SN) | T | 175.3/34.3 |
| J809 | 6510022471 | S.CNR | 40FLT-SM2-TB (LF) (SN) | T | 143.4/34.3 |
| J810 | 6510022731 | S.CNR | S13B-PH-SM4-TB (LF) (SN) | T | 120/7 |
| J811 | 6510021561 | S.CNR | 52808-2470 (2490) | T | 214.3/84.5 |
| J812 | 6510020701 | S.CNR | 52793-1270 (1290) | T | 19.5/123.9 |
| J813 | 6510020081 | S.CNR | 52808-2071 (2090) | T | 189/89.8 |
| J814 | 6510019971 | S.CNR | 52808-1071 | T | 229/79.5 |
| J815 | 6510019991 | S.CNR | 52808-2271 (2291) | T | 229/58 |
| J816 | 6510019991 | S.CNR | 52808-2271 (2291) | T | 171.2/17.5 |
| J820 | 6510003581 | CNR | S10B-EH-S (LF) (SN) | | |
| J821 | 6510003551 | CNR | S07B-EH-S (LF) (SN) | | |
| J822 | 6510021601 | S.CNR | S2B-PH-SM4-TB (LF) (SN) | T | 15.5/18 |
| J823 | 6510021601 | S.CNR | S2B-PH-SM4-TB (LF) (SN) | T | 53.8/122.6 |

## [LOGIC UNIT]

| REF NO. | ORDER NO. | DESCRIPTION | | M. | H/V LOCATION |
|---|---|---|---|---|---|
| J824 | 6510024100 | CNR | SC25-02WL | | |
| J825 | 6510019421 | S.CNR | B8B-ZR-SM4-TF (LF) (SN) | T | 29.4/20.8 |
| J826 | 6510023801 | S.CNR | S4B-ZR-SM4A-TF (LF) (SN) | T | 141.3/4.5 |
| DS401 | 5040002930 | S.LED | SML-512MW T86 | T | 11.9/96.4 |
| DS402 | 5040002930 | S.LED | SML-512MW T86 | T | 11.9/94.9 |
| DS403 | 5040002930 | S.LED | SML-512MW T86 | T | 11.9/93.1 |
| S51 | 2260001890 | S.SW | SKQDPA | T | 142.6/106.8 |
| T401 | 5920000841 | S.TSM | H1102NL | T | 150/20 |
| EP101 | 6910013310 | S.BEA | MMZ1608D121B | T | 3.6/74.9 |
| EP102 | 6910013310 | S.BEA | MMZ1608D121B | T | 10.3/80.5 |
| EP103 | 6910013310 | S.BEA | MMZ1608D121B | T | 14.9/80.7 |
| EP201 | 6910012350 | S.BEA | MMZ1608Y 102BT | T | 201.5/22.1 |
| EP202 | 6910012350 | S.BEA | MMZ1608Y 102BT | T | 198.3/28 |
| EP203 | 6910012350 | S.BEA | MMZ1608Y 102BT | T | 83.7/86.4 |
| EP204 | 6910012350 | S.BEA | MMZ1608Y 102BT | T | 79.6/72.4 |
| EP401 | 6910013310 | S.BEA | MMZ1608D121B | T | 19.4/79.6 |
| EP402 | 6910013310 | S.BEA | MMZ1608D121B | T | 17.3/75.6 |
| EP403 | 6910013310 | S.BEA | MMZ1608D121B | T | 19.4/82.5 |
| EP801 | 6910013310 | S.BEA | MMZ1608D121B | T | 204.4/9.8 |
| EP802 | 6910013310 | S.BEA | MMZ1608D121B | T | 202.1/10.6 |
| EP803 | 6910013310 | S.BEA | MMZ1608D121B | T | 200.8/10.6 |
| EP804 | 6910013310 | S.BEA | MMZ1608D121B | T | 199.5/10.6 |
| EP805 | 6910013310 | S.BEA | MMZ1608D121B | B | 201.4/8.2 |
| EP806 | 6910013310 | S.BEA | MMZ1608D121B | T | 198.2/10.6 |
| EP807 | 6910013310 | S.BEA | MMZ1608D121B | B | 200.1/8.2 |
| EP808 | 6910013310 | S.BEA | MMZ1608D121B | T | 196.9/10.6 |
| EP809 | 6910013310 | S.BEA | MMZ1608D121B | B | 198.8/8.2 |
| EP810 | 6910013310 | S.BEA | MMZ1608D121B | T | 195.6/10.6 |
| EP811 | 6910013310 | S.BEA | MMZ1608D121B | B | 197.5/8.2 |
| EP812 | 6910013310 | S.BEA | MMZ1608D121B | B | 196.2/8.2 |
| EP813 | 6910013310 | S.BEA | MMZ1608D121B | T | 194.3/10.6 |
| EP814 | 6910013310 | S.BEA | MMZ1608D121B | T | 193/10.6 |
| EP815 | 6910013310 | S.BEA | MMZ1608D121B | T | 191.7/10.9 |
| EP816 | 6910013310 | S.BEA | MMZ1608D121B | T | 190.4/11.6 |
| EP817 | 6910013310 | S.BEA | MMZ1608D121B | T | 189.1/12.3 |
| EP818 | 6910013310 | S.BEA | MMZ1608D121B | T | 187.8/12 |
| EP819 | 6910013310 | S.BEA | MMZ1608D121B | T | 186.5/11.6 |
| EP820 | 6910013310 | S.BEA | MMZ1608D121B | T | 183.5/10 |
| EP821 | 6910015980 | S.BEA | MMZ1608S 181CT-AS | T | 71.1/116.5 |
| EP822 | 6910015980 | S.BEA | MMZ1608S 181CT-AS | T | 72.5/116.5 |
| EP826 | 6910012350 | S.BEA | MMZ1608Y 102BT | T | 133.2/118.1 |
| EP827 | 6910012350 | S.BEA | MMZ1608Y 102BT | B | 137.3/124.5 |
| EP828 | 6910012350 | S.BEA | MMZ1608Y 102BT | B | 137.3/123.1 |
| EP829 | 6910012350 | S.BEA | MMZ1608Y 102BT | T | 135.2/117.3 |
| EP972 | 6910015970 | S.BEA | MMZ1608B 301CT-AS | T | 139/11.1 |
| EP973 | 6910015970 | S.BEA | MMZ1608B 301CT-AS | T | 142/11.1 |
| EP996 | 6910015970 | S.BEA | MMZ1608B 301CT-AS | B | 188.5/92.1 |
| EP997 | 6910015970 | S.BEA | MMZ1608B 301CT-AS | B | 189.5/83.5 |
| EP1001 | 6910015970 | S.BEA | MMZ1608B 301CT-AS | B | 193.5/83.5 |
| EP1002 | 6910015970 | S.BEA | MMZ1608B 301CT-AS | B | 194.5/92.1 |
| EP1101 | 6910013310 | S.BEA | MMZ1608D121B | T | 39.4/13.9 |
| EP1102 | 6910013310 | S.BEA | MMZ1608D121B | T | 40.1/16.6 |
| EP1103 | 6910013310 | S.BEA | MMZ1608D121B | T | 40.8/13.9 |
| EP1104 | 6910013310 | S.BEA | MMZ1608D121B | T | 41.5/16.6 |
| EP1105 | 6910013310 | S.BEA | MMZ1608D121B | T | 42.2/13.9 |
| EP1106 | 6910013310 | S.BEA | MMZ1608D121B | T | 42.9/16.6 |
| EP1107 | 6910013310 | S.BEA | MMZ1608D121B | T | 43.6/13.9 |
| EP1108 | 6910013310 | S.BEA | MMZ1608D121B | T | 44.3/16.6 |
| EP1109 | 6910013310 | S.BEA | MMZ1608D121B | T | 45/13.9 |
| EP1110 | 6910013310 | S.BEA | MMZ1608D121B | T | 45.7/16.6 |
| EP1111 | 6910013310 | S.BEA | MMZ1608D121B | T | 46.4/13.9 |
| EP1112 | 6910013310 | S.BEA | MMZ1608D121B | T | 47.1/16.6 |
| EP1113 | 6910013310 | S.BEA | MMZ1608D121B | T | 47.8/13.9 |
| EP1114 | 6910013310 | S.BEA | MMZ1608D121B | T | 48.5/16.6 |
| EP1115 | 6910013310 | S.BEA | MMZ1608D121B | T | 49.2/13.9 |
| EP1116 | 6910013310 | S.BEA | MMZ1608D121B | T | 49.9/16.6 |
| EP1117 | 6910013310 | S.BEA | MMZ1608D121B | T | 50.6/13.9 |
| EP1118 | 6910013310 | S.BEA | MMZ1608D121B | T | 51.3/16.6 |
| EP1119 | 6910013310 | S.BEA | MMZ1608D121B | T | 52/13.9 |
| EP1120 | 6910013310 | S.BEA | MMZ1608D121B | T | 52.7/16.6 |
| EP1121 | 6910013310 | S.BEA | MMZ1608D121B | T | 53.4/13.9 |
| EP1122 | 6910013310 | S.BEA | MMZ1608D121B | T | 54.1/16.6 |
| EP1123 | 6910013310 | S.BEA | MMZ1608D121B | T | 54.8/13.9 |
| EP1124 | 6910013310 | S.BEA | MMZ1608D121B | T | 42.8/29.6 |
| EP1125 | 6910013310 | S.BEA | MMZ1608D121B | T | 43.5/27 |
| EP1126 | 6910013310 | S.BEA | MMZ1608D121B | T | 44.2/29.6 |
| EP1127 | 6910013310 | S.BEA | MMZ1608D121B | T | 44.9/27 |
| EP1128 | 6910013310 | S.BEA | MMZ1608D121B | T | 45.6/29.6 |
| EP1129 | 6910013310 | S.BEA | MMZ1608D121B | T | 46.3/27 |
| EP1130 | 6910013310 | S.BEA | MMZ1608D121B | T | 47/29.6 |
| EP1131 | 6910013310 | S.BEA | MMZ1608D121B | T | 47.7/27 |
| EP1132 | 6910013310 | S.BEA | MMZ1608D121B | T | 48.4/29.6 |
| EP1133 | 6910013310 | S.BEA | MMZ1608D121B | T | 49.1/27 |
| EP1134 | 6910013310 | S.BEA | MMZ1608D121B | T | 49.8/29.6 |
| EP1135 | 6910013310 | S.BEA | MMZ1608D121B | T | 50.5/27 |
| EP1136 | 6910013310 | S.BEA | MMZ1608D121B | T | 51.2/29.6 |
| EP1137 | 6910013310 | S.BEA | MMZ1608D121B | T | 51.9/27 |
| EP1138 | 6910013310 | S.BEA | MMZ1608D121B | T | 52.6/29.6 |
| EP1139 | 6910013310 | S.BEA | MMZ1608D121B | T | 53.3/27 |
| EP1140 | 6910013310 | S.BEA | MMZ1608D121B | T | 54/29.6 |
| EP1141 | 6910013310 | S.BEA | MMZ1608D121B | T | 54.7/27 |
| EP1142 | 6910013310 | S.BEA | MMZ1608D121B | T | 55.4/29.6 |
| EP1143 | 6910013310 | S.BEA | MMZ1608D121B | T | 56.1/27 |
| EP1144 | 6910013310 | S.BEA | MMZ1608D121B | T | 56.8/29.6 |
| EP1145 | 6910013310 | S.BEA | MMZ1608D121B | T | 57.5/27 |
| EP1146 | 6910013310 | S.BEA | MMZ1608D121B | T | 58.2/29.6 |

M.=Mounted side (T: Mounted on the Top side, B: Mounted on the Bottom side)
S.=Surface mount

## [PA UNIT]

| REF NO. | ORDER NO. | DESCRIPTION | | M. | H/V LOCATION |
|---|---|---|---|---|---|
| MF1 | 2710000770 | FAN | FCB34AC12A | | |
| W1 | 8900012790 | CBL | OPC-1299 | | |

## [PA200W BOARD]

| REF NO. | ORDER NO. | DESCRIPTION | | M. | H/V LOCATION |
|---|---|---|---|---|---|
| IC2 | 1180001541 | S.IC | TA78L08F (TE12L,F) | T | 58.8/15.1 |
| Q1 | 1520000531 | S.TR | 2SB1119S-TD-E | T | 42.8/19.2 |
| Q2 | 1590000680 | S.TR | DTC114EUA T106 | T | 45.8/13.5 |
| Q101 | 1560001241 | S.FET | RD01MUS1-T113 | T | 5.9/66.4 |
| Q201 | 1590003051 | S.FET | PD55003-E | T | 20.5/53.1 |
| Q301 | 1590003350 | S.FET | SD2918 | T | 64/45.8 |
| Q401 | 1590003361 | FET | SD2931-12 | | |
| Q402 | 1590003361 | FET | SD2931-12 | | |
| D1 | 1730000561 | S.ZEN | RD2.7M-T2B-A B1 | T | 100.6/22.8 |
| D401 | 1750000271 | S.DIO | 1SS301 (TE85L,F) | T | 116.8/99.1 |
| D402 | 1750000271 | S.DIO | 1SS301 (TE85L,F) | T | 118.3/35.9 |
| D403 | 1750000271 | S.DIO | 1SS301 (TE85L,F) | T | 104/98.3 |
| D404 | 1750000271 | S.DIO | 1SS301 (TE85L,F) | T | 104/35.7 |
| L1 | 6200005011 | S.COL | NLV25T-100J | T | 14.7/18 |
| L2 | 6200005011 | S.COL | NLV25T-100J | T | 14.7/20.5 |
| L3 | 6200005011 | S.COL | NLV25T-100J | T | 14.7/23 |
| L6 | 6200005011 | S.COL | NLV25T-100J | T | 14.7/25.5 |
| L7 | 6200010881 | S.COL | CDRH124NP-330MC | T | 77.3/11 |
| L101 | 6200005131 | S.COL | NLC453232T-101K-PF | T | 5.6/59.6 |
| L102 | 6200007220 | S.COL | EXCCL4532U1 | T | 6/38.4 |
| L201 | 6180001240 | COL | LAL 04NA 820K | | |
| L202 | 6140004350 | COL | LR-475 | | |
| L301 | 6200003261 | S.COL | NLV32T-101J | T | 46.1/36.4 |
| L303 | 6200001831 | S.COL | NLV32T-100J | T | 86.9/26.2 |
| L304 | 2040000490 | COL | EXC-ELDR25C | | |
| L305 | 2040000490 | COL | EXC-ELDR25C | | |
| L306 | 6140004340 | COL | LR-474 | | |
| L307 | 6200001831 | S.COL | NLV32T-100J | T | 75.7/100.2 |
| L401 | 6200003261 | S.COL | NLV32T-101J | T | 100.4/98.3 |
| L402 | 6200003261 | S.COL | NLV32T-101J | T | 100.1/35.8 |
| L403 | 6140002590 | COL | LR-296 (TR18X8X8 D12A) | | |
| L404 | 6140000720 | S.COL | LR-95 | T | 166.4/67 |
| L501 | 6140002030 | COL | LR-230 (SK-10M-15Y 120) | | |
| R1 | 7030003440 | S.RES | ERJ3GEYJ 102 V (1 k) | T | 42.8/12.8 |
| R2 | 7030003560 | S.RES | ERJ3GEYJ 103 V (10 k) | T | 42.8/14.2 |
| R3 | 7510001740 | TMR | DTN-C103F3H-STS-40 | | |
| R4 | 7030000380 | S.RES | MCR10EZHJ 1 k | T | 39.7/22.5 |
| R5 | 7030008061 | S.RES | ERA3YED 222V (2.2 k) | T | 104.3/23.1 |
| R6 | 7030007210 | S.RES | ERA3YEB 102V (1 k) | T | 103.6/16.5 |
| R7 | 7030007210 | S.RES | ERA3YEB 102V (1 k) | T | 103.6/17.8 |
| R101 | 7030003370 | S.RES | ERJ3GEYJ 271 V (270) | T | 6/87.2 |
| R102 | 7030003220 | S.RES | ERJ3GEYJ 150 V (15) | T | 3.9/86.1 |
| R103 | 7030003370 | S.RES | ERJ3GEYJ 271 V (270) | T | 6/85 |
| R104 | 7030003360 | S.RES | ERJ3GEYJ 221 V (220) | T | 4.8/71.3 |
| R105 | 7030003430 | S.RES | ERJ3GEYJ 821 V (820) | T | 6/73.3 |
| R106 | 7030003480 | S.RES | ERJ3GEYJ 222 V (2.2 k) | T | 9.2/73.8 |
| R107 | 7030003440 | S.RES | ERJ3GEYJ 102 V (1 k) | T | 2.2/64.7 |
| R108 | 7030003200 | S.RES | ERJ3GEYJ 100 V (10) | T | 9.2/68.3 |
| R110 | 7030000230 | S.RES | MCR10EZHJ 56 (560) | T | 11.3/56.6 |
| R111 | 7030003420 | S.RES | ERJ3GEYJ 681 V (680) | T | 13.3/58.6 |
| R112 | 7030003510 | S.RES | ERJ3GEYJ 392 V (3.9 k) | T | 12.6/60.6 |
| R113 | 7030003500 | S.RES | ERJ3GEYJ 332 V (3.3 k) | T | 6.8/75.2 |
| R115 | 7030003520 | S.RES | ERJ3GEYJ 472 V (4.7 k) | T | 13.1/40.8 |
| R117 | 7030003530 | S.RES | ERJ3GEYJ 562 V (5.6 k) | T | 7.7/76.5 |
| R118 | 7030003550 | S.RES | ERJ3GEYJ 822 V (8.2 k) | T | 11.7/40.8 |
| R119 | 7030008240 | S.RES | ERJ12Y0R00U | T | 5/49.6 |
| R201 | 7030004050 | S.RES | ERJ3GEYJ 1R0 V (1) | T | 13.8/48.6 |
| R202 | 7030003410 | S.RES | ERJ3GEYJ 561 V (560) | T | 23.1/43.1 |
| R203 | 7030010800 | S.RES | ERJ1TYJ 2R7U (2.7) | T | 18.4/65.5 |
| R205 | 7030006260 | S.RES | ERJ12YJ471U (470) | T | 30.3/55.7 |
| R301 | 7310005210 | TRI | VM5CK-PVB 20 k | | |
| R302 | 7030008180 | S.RES | ERJ12YJ331U (330) | T | 48.3/40.6 |
| R305 | 7030003530 | S.RES | ERJ3GEYJ 562 V (5.6 k) | T | 49.6/43.5 |
| R307 | 7070000830 | RES | ERG3SJ 101 (100) | | |
| R309 | 7030010570 | S.RES | ERJ1TYJ 4R7U (4.7) | T | 80/45.8 |
| R310 | 7310005200 | TRI | VM5CK-PVB 2 k | | |
| R312 | 7070000830 | RES | ERG3SJ 101 (100) | | |
| R401 | 7030010960 | S.RES | ERJ1TYJ 120U (12) | T | 89.8/90.7 |
| R402 | 7030010960 | S.RES | ERJ1TYJ 120U (12) | T | 93.5/90.7 |
| R403 | 7030010960 | S.RES | ERJ1TYJ 120U (12) | T | 97.2/90.7 |
| R404 | 7030010960 | S.RES | ERJ1TYJ 120U (12) | T | 90.8/43.3 |
| R405 | 7030010960 | S.RES | ERJ1TYJ 120U (12) | T | 94.5/43.3 |
| R406 | 7030010960 | S.RES | ERJ1TYJ 120U (12) | T | 98.2/43.3 |
| R407 | 7310005230 | TRI | VM5CK-PVB 10 k | | |
| R408 | 7030000420 | S.RES | MCR10EZHJ 2.2 k | T | 116.3/96 |
| R409 | 7030000420 | S.RES | MCR10EZHJ 2.2 k | T | 116.3/38 |
| R410 | 7310005230 | TRI | VM5CK-PVB 10 k | | |
| R411 | 7030010520 | S.RES | ERJ1TYJ 101U (100) | T | 107.6/93.9 |
| R412 | 7030010520 | S.RES | ERJ1TYJ 101U (100) | T | 107.5/40.2 |
| R413 | 7030010520 | S.RES | ERJ1TYJ 101U (100) | T | 111.3/93.9 |
| R414 | 7030010520 | S.RES | ERJ1TYJ 101U (100) | T | 111.2/40.2 |
| R416 | 7070000890 | RES | ERG3SJ 150 (15) | | |
| R418 | 7070001190 | RES | ERG3SJ180 (18) | | |
| R420 | 7070000890 | RES | ERG3SJ 150 (15) | | |
| R422 | 7070001190 | RES | ERG3SJ180 (18) | | |
| R423 | 7030003460 | S.RES | ERJ3GEYJ 152 V (1.5 k) | T | 95.9/98.4 |
| R424 | 7030003460 | S.RES | ERJ3GEYJ 152 V (1.5 k) | T | 99.4/33.6 |
| R425 | 7310005200 | TRI | VM5CK-PVB 2 k | | |
| R426 | 7310005200 | TRI | VM5CK-PVB 2 k | | |

## [PA200W BOARD]

| REF NO. | ORDER NO. | DESCRIPTION | | M. | H/V LOCATION |
|---|---|---|---|---|---|
| R427 | 7070001200 | RES | ERG3SJ100P (10) | | |
| R501 | 7070000890 | RES | ERG3SJ 150 (15) | | |
| R502 | 7070000890 | RES | ERG3SJ 150 (15) | | |
| R503 | 7030003500 | S.RES | ERJ3GEYJ 332 V (3.3 k) | T | 171.8/16.7 |
| R504 | 7030003500 | S.RES | ERJ3GEYJ 332 V (3.3 k) | T | 169.9/15.9 |
| R507 | 7030003500 | S.RES | ERJ3GEYJ 332 V (3.3 k) | T | 139.1/17.9 |
| R508 | 7030003500 | S.RES | ERJ3GEYJ 332 V (3.3 k) | T | 137.3/19.2 |
| R511 | 7070000890 | RES | ERG3SJ 150 (15) | | |
| R512 | 7070000890 | RES | ERG3SJ 150 (15) | | |
| R513 | 7070001000 | RES | ERG3SJ 821 (820) | | |
| R514 | 7070001000 | RES | ERG3SJ 821 (820) | | |
| R521 | 7030011160 | S.RES | RL7520WT-R010-F | T | 165.2/20.2 |
| R522 | 7030011160 | S.RES | RL7520WT-R010-F | T | 159.6/20.2 |
| R523 | 7030011160 | S.RES | RL7520WT-R010-F | T | 154/20.2 |
| C1 | 4030011600 | S.CER | C1608 JB 1E 104K-T | T | 18.9/18 |
| C2 | 4030006880 | S.CER | C1608 JB 1H 472K-T | T | 18.9/20.5 |
| C3 | 4030006880 | S.CER | C1608 JB 1H 472K-T | T | 18.9/23 |
| C6 | 4030006880 | S.CER | C1608 JB 1H 472K-T | T | 18.9/25.5 |
| C7 | 4030006900 | S.CER | C1608 JB 1H 103K-T | T | 70/6.8 |
| C8 | 4030006880 | S.CER | C1608 JB 1H 472K-T | T | 42.8/15.6 |
| C9 | 4030011600 | S.CER | C1608 JB 1E 104K-T | T | 57.6/11.4 |
| C10 | 4510008520 | S.ELE | EEE1CA470SP | T | 52/15.5 |
| C11 | 4030006900 | S.CER | C1608 JB 1H 103K-T | T | 60.4/11.4 |
| C12 | 4510008520 | S.ELE | EEE1CA470SP | T | 64.9/15.5 |
| C15 | 4030006880 | S.CER | C1608 JB 1H 472K-T | T | 104.3/20.4 |
| C16 | 4030006880 | S.CER | C1608 JB 1H 472K-T | T | 103/23.1 |
| C17 | 4510008550 | S.ELE | EEE1HA010SR | T | 95.9/22.8 |
| C102 | 4030017810 | S.CER | C1608 CH 1H 102J-T | T | 4.1/76.2 |
| C103 | 4030011600 | S.CER | C1608 JB 1E 104K-T | T | 9.2/72.5 |
| C104 | 4030011600 | S.CER | C1608 JB 1E 104K-T | T | 9.5/75.2 |
| C106 | 4030017320 | S.CER | GRM21BB11H104KA01 | T | 2.2/67.7 |
| C107 | 4030011600 | S.CER | C1608 JB 1E 104K-T | T | 9.2/70.9 |
| C108 | 4030017810 | S.CER | C1608 CH 1H 102J-T | T | 9.2/69.6 |
| C109 | 4030017320 | S.CER | GRM21BB11H104KA01L | T | 8.1/62.6 |
| C110 | 4030017810 | S.CER | C1608 CH 1H 102J-T | T | 9/64.2 |
| C111 | 4030017810 | S.CER | C1608 CH 1H 102J-T | T | 9/56.4 |
| C112 | 4030017320 | S.CER | GRM21BB11H104KA01L | T | 8.7/54.8 |
| C113 | 4030011600 | S.CER | C1608 JB 1E 104K-T | T | 5.3/102.4 |
| C114 | 4030011600 | S.CER | C1608 JB 1E 104K-T | T | 13.9/60.6 |
| C201 | 4030017320 | S.CER | GRM21BB11H104KA01L | T | 18.2/43.1 |
| C202 | 4030017810 | S.CER | C1608 CH 1H 102J-T | T | 15.7/61.3 |
| C204 | 4030008490 | S.CER | C2012 JB 1H 682K-T | T | 31.2/61.6 |
| C206 | 4030008700 | S.CER | GRM21BB11H473KA01L | T | 29.3/61.6 |
| C207 | 4030008700 | S.CER | GRM21BB11H473KA01L | T | 34.4/36.7 |
| C301 | 4030004760 | S.CER | C2012 JF 1H 104Z-T | T | 49.4/45.5 |
| C303 | 4030011600 | S.CER | C1608 JB 1E 104K-T | T | 43.4/35.4 |
| C305 | 4030004760 | S.CER | C2012 JF 1H 104Z-T | T | 44.4/42.6 |
| C307 | 4030017810 | S.CER | C1608 CH 1H 102J-T | T | 39.7/31.7 |
| C309 | 4030011600 | S.CER | C1608 JB 1E 104K-T | T | 41.1/31.7 |
| C311 | 4030018750 | S.CER | C3225 CH 2J 682K-T | T | 54.1/58.9 |
| C313 | 4030011600 | S.CER | C1608 JB 1E 104K-T | T | 89.1/26.9 |
| C314 | 4510008050 | ELE | 63 ME 220 CZ | | |
| C317 | 4030018790 | S.CER | C3225 JB 2E 104K-T | T | 76.8/34 |
| C318 | 4030011600 | S.CER | C1608 JB 1E 104K-T | T | 77.2/96.7 |
| C319 | 4030018790 | S.CER | C3225 JB 2E 104K-T | T | 70.4/79 |
| C401 | 4030011790 | S.CER | GRM55RF52A684ZD01L | T | 92.4/82.2 |
| C402 | 4030011790 | S.CER | GRM55RF52A684ZD01L | T | 92.4/51.8 |
| C403 | 4030011600 | S.CER | C1608 JB 1E 104K-T | T | 79.9/100.1 |
| C404 | 4030011600 | S.CER | C1608 JB 1E 104K-T | T | 88.6/30.3 |
| C405 | 4030006900 | S.CER | C1608 JB 1H 103K-T | T | 79.9/98.8 |
| C406 | 4030006900 | S.CER | C1608 JB 1H 103K-T | T | 88.6/31.6 |
| C407 | 4030017810 | S.CER | C1608 CH 1H 102J-T | T | 79.9/97.5 |
| C408 | 4030017810 | S.CER | C1608 CH 1H 102J-T | T | 88.6/32.9 |
| C409 | 4030018790 | S.CER | C3225 JB 2E 104K-T | T | 111.3/100.2 |
| C410 | 4030018790 | S.CER | C3225 JB 2E 104K-T | T | 111.2/33.9 |
| C411 | 4030006880 | S.CER | C1608 JB 1H 472K-T | T | 114.9/99.1 |
| C412 | 4030006880 | S.CER | C1608 JB 1H 472K-T | T | 116.3/35 |
| C413 | 4030011600 | S.CER | C1608 JB 1E 104K-T | T | 97.8/99.1 |
| C414 | 4030011600 | S.CER | C1608 JB 1E 104K-T | T | 97.4/36.5 |
| C415 | 4030011790 | S.CER | GRM55RF52A684ZD01L | T | 102.8/88.8 |
| C416 | 4030011790 | S.CER | GRM55RF52A684ZD01L | T | 103.8/49 |
| C417 | 4030018760 | S.CER | C4532 CH 2A 104K-T | T | 190.2/82.6 |
| C418 | 4030018760 | S.CER | C4532 CH 2A 104K-T | T | 193.9/82.6 |
| C419 | 4030018760 | S.CER | C4532 CH 2A 104K-T | T | 190.2/53.4 |
| C420 | 4030018760 | S.CER | C4532 CH 2A 104K-T | T | 193.9/53.4 |
| C501 | 4030018790 | S.CER | C3225 JB 2E 104K-T | T | 183.8/32 |
| C502 | 4030018780 | S.CER | C3225 JB 2J 473K-T | T | 180.4/32 |
| C503 | 4030018770 | S.CER | C3216 CH 2J 102J-T | T | 177.3/32 |
| C504 | 4510006830 | ELE | 63 ME 470CZ | | |
| C505 | 4510006830 | ELE | 63 ME 470CZ | | |
| C506 | 4030006880 | S.CER | C1608 JB 1H 472K-T | T | 173.7/15.9 |
| C507 | 4030006880 | S.CER | C1608 JB 1H 472K-T | T | 137.2/17 |
| C510 | 4030018790 | S.CER | C3225 JB 2E 104K-T | T | 170.2/13.6 |
| C511 | 4030018780 | S.CER | C3225 JB 2J 473K-T | T | 170.2/10.6 |
| C512 | 4030018770 | S.CER | C3216 CH 2J 102J-T | T | 169.9/7.2 |
| C513 | 4510008050 | ELE | 63 ME 220 CZ | | |
| C514 | 4030011790 | S.CER | GRM55RF52A684ZD01L | T | 164.8/6.7 |
| C515 | 4030011790 | S.CER | GRM55RF52A684ZD01L | T | 148.4/6.6 |
| J1 | 6510007020 | CNR | TMP-J01X-V6 | | |
| J2 | 6510022311 | S.CNR | B5B-PH-SM4-TB (LF) (SN) | T | 6/23 |
| J5 | 6510020421 | S.CNR | S4B-PH-SM4-TB (LF) (SN) | T | 93/4.5 |
| J401 | 6510017920 | CNR | 1811P342 | | |
| J402 | 6910001040 | CNR | IPS-1136 | | |
| W401 | 9025900670 | WIR | 23/05/060/B21/W07 | | |
| W501 | 9040401001 | JMP | 74/98/050/X98/X98 | | |
| EP501 | 6910011330 | TER | OT-009 M3 | | |
| EP502 | 6910011330 | TER | OT-009 M3 | | |
| EP503 | 6910000640 | BEA | FSRH090160RN000B | | |

M.=Mounted side (T: Mounted on the Top side, B: Mounted on the Bottom side)
S.=Surface mount

## [DC-DC UNIT]

| REF NO. | ORDER NO. | DESCRIPTION | | M. | H/V LOCATION |
|---|---|---|---|---|---|
| IC21 | 1180002510 | S.REG | LM2673S-3.3 | T | 130/20.9 |
| IC41 | 1180002510 | S.REG | LM2673S-3.3 | T | 97.6/94.7 |
| IC61 | 1180002520 | S.REG | LM2673S-5.0 | T | 97.6/59.8 |
| IC81 | 1180002520 | S.REG | LM2673S-5.0 | T | 38/13.5 |
| IC101 | 1180002500 | S.REG | LM2673S-ADJ | T | 96.6/26.6 |
| IC121 | 1180002530 | S.REG | LM2594M-12 | T | 128.6/69.2 |
| Q141 | 1590003310 | S.TR | DTD113ZK T146 | T | 7.8/95.4 |
| D21 | 1750000960 | S.DIO | RB081L-20 | T | 125.2/32.8 |
| D41 | 1750000960 | S.DIO | RB081L-20 | T | 85.7/88.1 |
| D61 | 1750000960 | S.DIO | RB081L-20 | T | 88.6/54.3 |
| D81 | 1750000960 | S.DIO | RB081L-20 | T | 31.2/22 |
| D101 | 1750000960 | S.DIO | RB081L-20 | T | 87.6/21.9 |
| D121 | 1710000840 | S.DIO | 1SR154-400 TE25 | T | 145.3/70.6 |
| D122 | 1750001011 | S.DIO | MBRD835LT4G | T | 120.6/82.8 |
| D123 | 1750000960 | S.DIO | RB081L-20 | T | 132.6/86.1 |
| D141 | 1750000520 | S.DIO | DAN222TL | T | 11.3/94.8 |
| L21 | 6200003950 | S.COL | HF50ACC 322513-T | T | 117.9/55.1 |
| L22 | 6200010891 | S.COL | CDRH124NP-150MC | T | 115.5/34.2 |
| L23 | 6200010881 | S.COL | CDRH124NP-330MC | T | 130/50.7 |
| L41 | 6200009790 | S.COL | BLM31PG121SN1 | T | 63.2/81.3 |
| L42 | 6200010891 | S.COL | CDRH124NP-150MC | T | 84.7/80.3 |
| L43 | 6200010881 | S.COL | CDRH124NP-330MC | T | 68.3/94 |
| L44 | 6200009790 | S.COL | BLM31PG121SN1 | T | 63.2/83.6 |
| L61 | 6200003950 | S.COL | HF50ACC 322513-T | T | 62.9/46.6 |
| L62 | 6200010901 | S.COL | CDRH104RNP-100NC | T | 80.4/45 |
| L63 | 6200010881 | S.COL | CDRH124NP-330MC | T | 66.5/58 |
| L81 | 6200003950 | S.COL | HF50ACC 322513-T | T | 27.4/47.8 |
| L82 | 6200010901 | S.COL | CDRH104RNP-100NC | T | 22.7/32 |
| L83 | 6200010881 | S.COL | CDRH124NP-330MC | T | 36.1/43.1 |
| L101 | 6200003950 | S.COL | HF50ACC 322513-T | T | 62.9/16.6 |
| L102 | 6200010881 | S.COL | CDRH124NP-330MC | T | 84.9/12.1 |
| L103 | 6190001191 | S.COL | D10F-#A814AY-101K | T | 65.5/26.6 |
| L121 | 6190001640 | S.COL | SLF12555T-101M1R1 | T | 119.3/72.3 |
| L122 | 6190001191 | S.COL | D10F-#A814AY-101K | T | 141.6/80.9 |
| L141 | 6200001831 | S.COL | NLV32T-100J | T | 10.5/99.4 |
| L142 | 6200010901 | S.COL | CDRH104RNP-100NC | T | 97.3/109 |
| R21 | 7030006091 | S.RES | ERA3YED 822V (8.2 k) | T | 119.1/19.7 |
| R41 | 7030006091 | S.RES | ERA3YED 822V (8.2 k) | T | 98.9/83.8 |
| R61 | 7030006091 | S.RES | ERA3YED 822V (8.2 k) | T | 98.8/48.5 |
| R81 | 7030006091 | S.RES | ERA3YED 822V (8.2 k) | T | 27/12.2 |
| R101 | 7030009851 | S.RES | ERA3YED 271V (270) | T | 102/17.9 |
| R102 | 7030007230 | S.RES | ERA3YED 102V (1 k) | T | 102/20.8 |
| R103 | 7030006091 | S.RES | ERA3YED 822V (8.2 k) | T | 97.9/15.7 |
| R121 | 7030003640 | S.RES | ERJ3GEYJ 473 V (47 k) | T | 133.3/72.6 |
| R122 | 7030003640 | S.RES | ERJ3GEYJ 473 V (47 k) | T | 132/71.8 |
| R141 | 7030008190 | S.RES | ERJ12YJ330U (33) | T | 14.7/99 |
| C9 | 4510008910 | S.ELE | EEEFC1C101P | T | 138.5/69.7 |
| C21 | 4030011600 | S.CER | C1608 JB 1E 104K-T | T | 125.3/40.8 |
| C22 | 4510008610 | S.ELE | 10SVP150MX | T | 131.1/38.1 |
| C23 | 4030011340 | S.CER | C1608 CH 1H 471J-T | T | 119.1/17.1 |
| C24 | 4030004750 | S.CER | C2012 JB 1H 103K-T | T | 119.7/23.7 |
| C25 | 4030005110 | S.CER | C2012 JB 1E 473K-T | T | 125.3/27.5 |
| C26 | 4550006770 | S.TAN | TEESVD2 1C 476M-12R | T | 132.1/30 |
| C27 | 4510008610 | S.ELE | 10SVP150MX | T | 115.3/47.4 |
| C41 | 4030011600 | S.CER | C1608 JB 1E 104K-T | T | 77.5/89.5 |
| C42 | 4510008610 | S.ELE | 10SVP150MX | T | 80.8/95.2 |
| C43 | 4030011340 | S.CER | C1608 CH 1H 471J-T | T | 101.4/83.8 |
| C44 | 4030004750 | S.CER | C2012 JB 1H 103K-T | T | 94.8/84.1 |
| C45 | 4030005110 | S.CER | C2012 JB 1E 473K-T | T | 91.4/90.6 |
| C46 | 4550007140 | S.TAN | TEESVD 1C 107M12R | T | 87.6/96.4 |
| C47 | 4510008610 | S.ELE | 10SVP150MX | T | 70.5/79.1 |
| C61 | 4030011600 | S.CER | C1608 JB 1E 104K-T | T | 81.5/56 |
| C62 | 4510008610 | S.ELE | 10SVP150MX | T | 77.3/60.9 |
| C63 | 4030011340 | S.CER | C1608 CH 1H 471J-T | T | 101.4/48.5 |
| C64 | 4030004750 | S.CER | C2012 JB 1H 103K-T | T | 94.8/49.1 |
| C65 | 4030011600 | S.CER | C1608 JB 1E 104K-T | T | 91.1/55.4 |
| C66 | 4550006770 | S.TAN | TEESVD2 1C 476M-12R | T | 85.6/61.7 |
| C67 | 4510008610 | S.ELE | 10SVP150MX | T | 69.6/44 |
| C81 | 4030011600 | S.CER | C1608 JB 1E 104K-T | T | 33.1/28.4 |
| C82 | 4510008610 | S.ELE | 10SVP150MX | T | 37.9/32.4 |
| C83 | 4030011340 | S.CER | C1608 CH 1H 471J-T | T | 26.9/9.7 |
| C84 | 4030004750 | S.CER | C2012 JB 1H 103K-T | T | 27.7/16.1 |
| C85 | 4030011600 | S.CER | C1608 JB 1E 104K-T | T | 33.4/19.8 |
| C86 | 4550006770 | S.TAN | TEESVD2 1C 476M-12R | T | 38/25.1 |
| C87 | 4510008610 | S.ELE | 10SVP150MX | T | 21.7/42.7 |
| C101 | 4030011600 | S.CER | C1608 JB 1E 104K-T | T | 80.1/22.7 |
| C102 | 4510008610 | S.ELE | 10SVP150MX | T | 75.7/27.3 |
| C103 | 4030011340 | S.CER | C1608 CH 1H 471J-T | T | 100.4/15.6 |
| C104 | 4030004750 | S.CER | C2012 JB 1H 103K-T | T | 93.8/16.2 |
| C105 | 4030005110 | S.CER | C2012 JB 1E 473K-T | T | 90.1/22.5 |
| C106 | 4550006770 | S.TAN | TEESVD2 1C 476M-12R | T | 83.8/28.2 |
| C107 | 4510008610 | S.ELE | 10SVP150MX | T | 68.6/11.3 |
| C122 | 4030011600 | S.CER | C1608 JB 1E 104K-T | T | 132/69.2 |
| C123 | 4510008940 | S.ELE | EEEFC1V470P | T | 131.7/79.3 |
| C124 | 4030006880 | S.CER | C1608 JB 1H 472K-T | T | 120.8/95.1 |
| C141 | 4030011600 | S.CER | C1608 JB 1E 104K-T | T | 7.6/97.9 |
| RL142 | 6330001760 | RLY | AW3023 | | |
| J2 | 6510003471 | CNR | B11B-EH-S (LF) (SN) | | |
| J3 | 6510003431 | CNR | B07B-EH-S (LF) (SN) | | |
| J4 | 6510003461 | CNR | B10B-EH-S (LF) (SN) | | |
| J5 | 6510020421 | S.CNR | S4B-PH-SM4-TB (LF) (SN) | T | 128.2/97.5 |
| W1 | 8900012780 | CBL | OPC-1298 | | |

## [TUNER UNIT]

| REF NO. | ORDER NO. | DESCRIPTION | | M. | H/V LOCATION |
|---|---|---|---|---|---|
| MF1 | 2710000780 | MTR | MP24Z (STEPPING MOTOR) | | |
| MF2 | 2710000780 | MTR | MP24Z (STEPPING MOTOR) | | |
| MF3 | 2710000470 | FAN | MF60B-12H901 | | |
| W1 | 8900012901 | CBL | OPC-1345R | | |
| W2 | 8900012901 | CBL | OPC-1345R | | |
| W3 | 8900017140 | CBL | OPC-927A (P1,N24,L100) | | |
| W51 | 8600037090 | CBL | SX2590 P51 | | |

M.=Mounted side (T: Mounted on the Top side, B: Mounted on the Bottom side)
S.=Surface mount

## [CTRL BOARD]

| REF NO. | ORDER NO. | DESCRIPTION | | M. | H/V LOCATION |
|---|---|---|---|---|---|
| IC1 | 1140004120 | S.IC | M38022M2-138FP | T | 65.7/81.8 |
| IC2 | 1130010390 | S.IC | HN58X2416TI | T | 54/86.9 |
| IC3 | 1130003921 | S.IC | TC4S69F (TE85R,F) | T | 55.9/58.2 |
| IC4 | 1180001071 | S.IC | TA7805F (TE16L,Q) | B | 63/57.7 |
| IC5 | 1130009691 | S.IC | TC74HCT7007AF (F) | B | 92.5/91.6 |
| IC6 | 1130006441 | S.IC | TC7S08F (TE85R,F) | T | 81.7/70.3 |
| IC51 | 1130011530 | S.IC | CD74HC4094M96 | T | 42.2/72.4 |
| IC52 | 1130007690 | S.IC | BU4066BCF-E2 | B | 12.5/76.8 |
| IC55 | 1130011530 | S.IC | CD74HC4094M96 | B | 100.2/76.1 |
| IC56 | 1130011530 | S.IC | CD74HC4094M96 | B | 114.3/76.1 |
| IC57 | 1160000131 | S.IC | TD62783AFG (S,EL) | T | 99.6/73.1 |
| IC58 | 1160000131 | S.IC | TD62783AFG (S,EL) | T | 113.7/73.1 |
| IC101 | 1110000960 | S.IC | NJM4558M-TE1-#FMZB | T | 19.4/37.8 |
| IC151 | 1120002301 | S.IC | TC74AC04F (F) | B | 35.3/44.3 |
| IC153 | 1130012011 | S.IC | TC7SZ32F (TE85L,F) | T | 31.2/47.3 |
| IC154 | 1130012011 | S.IC | TC7SZ32F (TE85L,F) | T | 42.4/45.8 |
| IC155 | 1130012011 | S.IC | TC7SZ32F (TE85L,F) | T | 36/47.5 |
| IC156 | 1130012021 | S.IC | TC74ACT112F (EL,F) | T | 38.4/56.5 |
| IC201 | 1110000960 | S.IC | NJM4558M-TE1-#FMZB | T | 19/54.7 |
| IC301 | 1110002690 | S.IC | NJM2903M-TE1-#FMZB | T | 73.4/59 |
| IC401 | 1160000131 | S.IC | TD62783AFG (S,EL) | T | 13.6/86.1 |
| IC402 | 1160000131 | S.IC | TD62783AFG (S,EL) | T | 31.6/84.7 |
| Q1 | 1590001330 | S.TR | DTA114EUA T106 | T | 78.5/75.2 |
| Q2 | 1590000680 | S.TR | DTC114EUA T106 | T | 77.8/71.2 |
| Q3 | 1590000680 | S.TR | DTC114EUA T106 | T | 128.4/74.5 |
| Q4 | 1590000680 | S.TR | DTC114EUA T106 | T | 128.4/77 |
| Q5 | 1590000680 | S.TR | DTC114EUA T106 | T | 128.4/81.3 |
| Q6 | 1590000680 | S.TR | DTC114EUA T106 | T | 128.4/83.8 |
| Q7 | 1590000680 | S.TR | DTC114EUA T106 | T | 128.4/88.5 |
| Q8 | 1590000680 | S.TR | DTC114EUA T106 | T | 128.4/91 |
| Q9 | 1590000680 | S.TR | DTC114EUA T106 | T | 128.4/95.7 |
| Q10 | 1590000680 | S.TR | DTC114EUA T106 | T | 128.4/100.5 |
| Q11 | 1590000680 | S.TR | DTC114EUA T106 | B | 85.7/99.8 |
| Q51 | 1590000680 | S.TR | DTC114EUA T106 | T | 6.1/78.6 |
| Q52 | 1590000680 | S.TR | DTC114EUA T106 | T | 12.5/78.6 |
| Q53 | 1590000680 | S.TR | DTC114EUA T106 | B | 6.6/72.8 |
| Q54 | 1560001260 | S.FET | 2SK3018 T106 | B | 121.2/80.2 |
| Q55 | 1590000680 | S.TR | DTC114EUA T106 | B | 130.2/68.9 |
| Q59 | 1590000680 | S.TR | DTC114EUA T106 | T | 56.8/69.5 |
| Q201 | 1560000871 | S.FET | 2SK515-T1B-A (X33) | T | 52.6/43 |
| Q251 | 1590000680 | S.TR | DTC114EUA T106 | T | 74.2/34.9 |
| D1 | 1730000411 | S.ZEN | RD5.1M-T2B-A B2 | T | 63.4/58.4 |
| D2 | 1710000780 | S.DIO | MA114 (TX) | T | 67.7/55.9 |
| D3 | 1750000201 | S.DIO | 1SS319 (TE85R,F) | B | 129.5/98.1 |
| D4 | 1750000201 | S.DIO | 1SS319 (TE85R,F) | B | 129.5/90 |
| D5 | 1750000201 | S.DIO | 1SS319 (TE85R,F) | B | 129.5/82.8 |
| D6 | 1750000201 | S.DIO | 1SS319 (TE85R,F) | B | 129.5/76 |
| D7 | 1730000031 | S.ZEN | RD5.6M-T2B-A B2 | T | 63.6/54.9 |
| D101 | 1790000491 | S.DIO | HSM88ASTR-E | T | 14.7/24.3 |
| D102 | 1790000491 | S.DIO | HSM88ASTR-E | T | 25.6/29.5 |
| D103 | 1750000201 | S.DIO | 1SS319 (TE85R,F) | T | 19.3/42.1 |
| D151 | 1790000491 | S.DIO | HSM88ASTR-E | T | 32/38.2 |
| D152 | 1790000491 | S.DIO | HSM88ASTR-E | T | 39.4/38.2 |
| D153 | 1790000491 | S.DIO | HSM88ASTR-E | T | 28.4/57.2 |
| D154 | 1790000491 | S.DIO | HSM88ASTR-E | T | 29.6/53.4 |
| D201 | 1790000491 | S.DIO | HSM88ASTR-E | T | 57.6/37.2 |
| D202 | 1790000491 | S.DIO | HSM88ASTR-E | T | 48.5/37.1 |
| D203 | 1750000201 | S.DIO | 1SS319 (TE85R,F) | T | 18/60.9 |
| D251 | 1750000271 | S.DIO | 1SS301 (TE85L,F) | T | 72.1/36.5 |
| D301 | 1790000491 | S.DIO | HSM88ASTR-E | T | 81.5/58.3 |
| D302 | 1790000491 | S.DIO | HSM88ASTR-E | T | 88.4/59.6 |
| X1 | 6050009890 | S.XTL | CR-569 (6.144 MHz) | T | 83.2/79.5 |
| L1 | 6200003261 | S.COL | NLV32T-101J | T | 51.1/76.5 |
| L2 | 6200003261 | S.COL | NLV32T-101J | T | 54.5/77.8 |
| L4 | 2040000490 | COL | EXC-ELDR25C | | |
| L5 | 6200005131 | S.COL | NLC453232T-101K-PF | T | 121.6/100.3 |
| L6 | 6200003590 | S.COL | EXCCL3225U1 | T | 109.3/91.1 |
| L7 | 6200003590 | S.COL | EXCCL3225U1 | T | 106.3/91.2 |
| L8 | 6200003590 | S.COL | EXCCL3225U1 | T | 103.3/91.1 |
| L9 | 6200003950 | S.COL | HF50ACC 322513-T | B | 92/101 |
| L51 | 6200003261 | S.COL | NLV32T-101J | T | 106.3/86.9 |
| L52 | 6200005131 | S.COL | NLC453232T-101K-PF | T | 114.9/88.1 |
| L101 | 6140004410 | COL | LR-502 | | |
| L102 | 6200001831 | S.COL | NLV32T-100J | T | 20.9/66.5 |
| L103 | 6200003261 | S.COL | NLV32T-101J | T | 15.2/66.4 |
| L151 | 6140004410 | COL | LR-502 | | |
| L152 | 6200001831 | S.COL | NLV32T-100J | T | 41.4/63 |
| L201 | 6140004410 | COL | LR-502 | | |
| L202 | 6180003300 | COL | T6-222J (2.2M) | | |
| L301 | 6140004410 | COL | LR-502 | | |
| L302 | 6200003261 | S.COL | NLV32T-101J | B | 69.4/61.2 |
| L401 | 6200003950 | S.COL | HF50ACC 322513-T | T | 26.4/101.5 |
| L402 | 6200003950 | S.COL | HF50ACC 322513-T | T | 18.5/101.5 |
| R2 | 7030003680 | S.RES | ERJ3GEYJ 104 V (100 k) | T | 63/71 |
| R3 | 7030003680 | S.RES | ERJ3GEYJ 104 V (100 k) | T | 64.3/71 |
| R4 | 7030003680 | S.RES | ERJ3GEYJ 104 V (100 k) | T | 65.6/71 |
| R5 | 7030003680 | S.RES | ERJ3GEYJ 104 V (100 k) | T | 66.9/71 |
| R6 | 7030003560 | S.RES | ERJ3GEYJ 103 V (10 k) | T | 74.7/71 |
| R7 | 7030003440 | S.RES | ERJ3GEYJ 102 V (1 k) | T | 73.4/71 |
| R8 | 7030003680 | S.RES | ERJ3GEYJ 104 V (100 k) | T | 55.4/72.8 |
| R9 | 7030003680 | S.RES | ERJ3GEYJ 104 V (100 k) | T | 54.7/74.7 |
| R10 | 7030003680 | S.RES | ERJ3GEYJ 104 V (100 k) | T | 57.3/72.9 |
| R11 | 7030003680 | S.RES | ERJ3GEYJ 104 V (100 k) | T | 53.4/74.7 |
| R12 | 7030003440 | S.RES | ERJ3GEYJ 102 V (1 k) | T | 78.3/83.9 |
| R13 | 7030003680 | S.RES | ERJ3GEYJ 104 V (100 k) | T | 76.6/75.6 |
| R14 | 7030003680 | S.RES | ERJ3GEYJ 104 V (100 k) | T | 78.5/78.2 |
| R15 | 7030003440 | S.RES | ERJ3GEYJ 102 V (1 k) | T | 55.6/60.7 |
| R16 | 7030003320 | S.RES | ERJ3GEYJ 101 V (100) | T | 54.8/55.2 |

## [CTRL BOARD]

| REF NO. | ORDER NO. | DESCRIPTION | | M. | H/V LOCATION |
|---|---|---|---|---|---|
| R17 | 7030003560 | S.RES | ERJ3GEYJ 103 V (10 k) | T | 54.1/82.2 |
| R18 | 7030003560 | S.RES | ERJ3GEYJ 103 V (10 k) | T | 54.1/80.9 |
| R19 | 7030003680 | S.RES | ERJ3GEYJ 104 V (100 k) | T | 58.3/58.2 |
| R20 | 7030003570 | S.RES | ERJ3GEYJ 123 V (12 k) | T | 59.6/60.6 |
| R21 | 7030003650 | S.RES | ERJ3GEYJ 563 V (56 k) | T | 59.6/58.2 |
| R22 | 7030003450 | S.RES | ERJ3GEYJ 122 V (1.2 k) | T | 66.3/58.5 |
| R23 | 7030003560 | S.RES | ERJ3GEYJ 103 V (10 k) | B | 105.1/100 |
| R24 | 7030003440 | S.RES | ERJ3GEYJ 102 V (1 k) | B | 102.9/98.8 |
| R25 | 7030003380 | S.RES | ERJ3GEYJ 331 V (330) | B | 126/99.1 |
| R26 | 7030003380 | S.RES | ERJ3GEYJ 331 V (330) | B | 126/97.1 |
| R27 | 7030003380 | S.RES | ERJ3GEYJ 331 V (330) | B | 126/91 |
| R28 | 7030003380 | S.RES | ERJ3GEYJ 331 V (330) | B | 126/89 |
| R29 | 7030003380 | S.RES | ERJ3GEYJ 331 V (330) | B | 126/83.8 |
| R30 | 7030003380 | S.RES | ERJ3GEYJ 331 V (330) | B | 126/81.8 |
| R31 | 7030003380 | S.RES | ERJ3GEYJ 331 V (330) | B | 126/77 |
| R32 | 7030003380 | S.RES | ERJ3GEYJ 331 V (330) | B | 126/75 |
| R40 | 7030003440 | S.RES | ERJ3GEYJ 102 V (1 k) | T | 61.2/99.9 |
| R42 | 7030003860 | S.RES | ERJ3GE JPW V | T | 60.4/71 |
| R43 | 7030003860 | S.RES | ERJ3GE JPW V | T | 60.7/69 |
| R44 | 7030003860 | S.RES | ERJ3GE JPW V | T | 68.2/71 |
| R45 | 7030003860 | S.RES | ERJ3GE JPW V | T | 65.7/68.5 |
| R46 | 7030003860 | S.RES | ERJ3GE JPW V | T | 70.6/68.9 |
| R51 | 7030003440 | S.RES | ERJ3GEYJ 102 V (1 k) | B | 35.8/80.1 |
| R52 | 7030003440 | S.RES | ERJ3GEYJ 102 V (1 k) | B | 34.3/80.1 |
| R53 | 7030003440 | S.RES | ERJ3GEYJ 102 V (1 k) | B | 32.8/80.1 |
| R54 | 7030003440 | S.RES | ERJ3GEYJ 102 V (1 k) | B | 31.2/80.1 |
| R55 | 7030003440 | S.RES | ERJ3GEYJ 102 V (1 k) | B | 29.6/80.1 |
| R56 | 7030003440 | S.RES | ERJ3GEYJ 102 V (1 k) | B | 28/80.1 |
| R57 | 7030003440 | S.RES | ERJ3GEYJ 102 V (1 k) | B | 26.4/80.1 |
| R58 | 7030003440 | S.RES | ERJ3GEYJ 102 V (1 k) | B | 24.8/80.1 |
| R59 | 7030003440 | S.RES | ERJ3GEYJ 102 V (1 k) | T | 18.3/78.7 |
| R60 | 7030003440 | S.RES | ERJ3GEYJ 102 V (1 k) | T | 17/76 |
| R61 | 7030003440 | S.RES | ERJ3GEYJ 102 V (1 k) | T | 15.7/76 |
| R62 | 7030003440 | S.RES | ERJ3GEYJ 102 V (1 k) | T | 14.4/78.7 |
| R63 | 7030003440 | S.RES | ERJ3GEYJ 102 V (1 k) | T | 10.6/78.7 |
| R64 | 7030003440 | S.RES | ERJ3GEYJ 102 V (1 k) | T | 9.3/74.8 |
| R65 | 7030003440 | S.RES | ERJ3GEYJ 102 V (1 k) | T | 8/74.8 |
| R66 | 7030003520 | S.RES | ERJ3GEYJ 472 V (4.7 k) | B | 15.6/81.6 |
| R67 | 7030003200 | S.RES | ERJ3GEYJ 100 V (10) | T | 99.8/90.4 |
| R68 | 7030003200 | S.RES | ERJ3GEYJ 100 V (10) | T | 98.5/90.4 |
| R69 | 7030003200 | S.RES | ERJ3GEYJ 100 V (10) | T | 97.2/90.4 |
| R70 | 7030004040 | S.RES | ERJ3GEYJ 4R7 V (4.7) | T | 104.8/65.9 |
| R71 | 7030004040 | S.RES | ERJ3GEYJ 4R7 V (4.7) | T | 103.5/65.9 |
| R72 | 7030004040 | S.RES | ERJ3GEYJ 4R7 V (4.7) | T | 102.2/65.9 |
| R73 | 7030004040 | S.RES | ERJ3GEYJ 4R7 V (4.7) | T | 100.9/65.9 |
| R74 | 7030004040 | S.RES | ERJ3GEYJ 4R7 V (4.7) | T | 99.6/65.9 |
| R75 | 7030004040 | S.RES | ERJ3GEYJ 4R7 V (4.7) | T | 98.3/65.9 |
| R76 | 7030004040 | S.RES | ERJ3GEYJ 4R7 V (4.7) | T | 97/65.9 |
| R77 | 7030004040 | S.RES | ERJ3GEYJ 4R7 V (4.7) | T | 95.7/65.9 |
| R78 | 7030004040 | S.RES | ERJ3GEYJ 4R7 V (4.7) | B | 120.1/64.6 |
| R84 | 7030004040 | S.RES | ERJ3GEYJ 4R7 V (4.7) | B | 110.5/64.6 |
| R85 | 7030004040 | S.RES | ERJ3GEYJ 4R7 V (4.7) | B | 108.9/64.6 |
| R86 | 7030003560 | S.RES | ERJ3GEYJ 103 V (10 k) | B | 116.1/83.6 |
| R87 | 7030003860 | S.RES | ERJ3GE JPW V | T | 32.5/76 |
| R88 | 7030003860 | S.RES | ERJ3GE JPW V | T | 31.2/76 |
| R89 | 7030003860 | S.RES | ERJ3GE JPW V | T | 29.9/76 |
| R90 | 7030003860 | S.RES | ERJ3GE JPW V | T | 28.6/76 |
| R91 | 7030003860 | S.RES | ERJ3GE JPW V | T | 27.3/76 |
| R92 | 7030003860 | S.RES | ERJ3GE JPW V | T | 26/76 |
| R95 | 7030003860 | S.RES | ERJ3GE JPW V | T | 15.7/78.7 |
| R97 | 7030003860 | S.RES | ERJ3GE JPW V | T | 8/78.7 |
| R101 | 7030010950 | S.RES | ERJ1TYJ 100U (10) | T | 18.6/29.5 |
| R102 | 7030010950 | S.RES | ERJ1TYJ 100U (10) | T | 22.3/29.5 |
| R103 | 7030003560 | S.RES | ERJ3GEYJ 103 V (10 k) | T | 12.2/34.7 |
| R104 | 7030003560 | S.RES | ERJ3GEYJ 103 V (10 k) | T | 27.6/34.9 |
| R105 | 7030003720 | S.RES | ERJ3GEYJ 224 V (220 k) | T | 12.2/37.3 |
| R106 | 7030003720 | S.RES | ERJ3GEYJ 224 V (220 k) | T | 25/36.7 |
| R107 | 7030003660 | S.RES | ERJ3GEYJ 683 V (68 k) | T | 14.1/36.5 |
| R108 | 7030003660 | S.RES | ERJ3GEYJ 683 V (68 k) | T | 23.2/34.8 |
| R109 | 7030003720 | S.RES | ERJ3GEYJ 224 V (220 k) | T | 13.3/38.7 |
| R110 | 7030003720 | S.RES | ERJ3GEYJ 224 V (220 k) | T | 25/37.9 |
| R111 | 7030009340 | S.RES | ERJ3GEYJ 275V (2.7 M) | T | 13.7/40.6 |
| R112 | 7030003810 | S.RES | ERJ3GEYJ 125 V (1.2 M) | T | 25/39.1 |
| R115 | 7030009340 | S.RES | ERJ3GEYJ 275V (2.7 M) | T | 12.4/40.6 |
| R151 | 7030007190 | S.RES | ERJ12YJ220U (22) | T | 37.6/27.2 |
| R152 | 7030010620 | S.RES | ERJ12YJ180U (18) | B | 38.1/26.8 |
| R153 | 7030007190 | S.RES | ERJ12YJ220U (22) | T | 37.6/31.8 |
| R154 | 7030010620 | S.RES | ERJ12YJ180U (18) | B | 38.1/31.8 |
| R155 | 7030003320 | S.RES | ERJ3GEYJ 101 V (100) | T | 37/39.6 |
| R157 | 7030003320 | S.RES | ERJ3GEYJ 101 V (100) | T | 30.3/40.1 |
| R158 | 7030003560 | S.RES | ERJ3GEYJ 103 V (10 k) | T | 31.8/41.5 |
| R159 | 7030003560 | S.RES | ERJ3GEYJ 103 V (10 k) | T | 38.4/41.5 |
| R160 | 7030003280 | S.RES | ERJ3GEYJ 470 V (47) | T | 30/42.3 |
| R161 | 7030003280 | S.RES | ERJ3GEYJ 470 V (47) | T | 39.7/43 |
| R162 | 7030003440 | S.RES | ERJ3GEYJ 102 V (1 k) | T | 30.9/44.9 |
| R163 | 7030003440 | S.RES | ERJ3GEYJ 102 V (1 k) | T | 42/43.3 |
| R164 | 7030003280 | S.RES | ERJ3GEYJ 470 V (47) | T | 33.6/47.7 |
| R165 | 7030003280 | S.RES | ERJ3GEYJ 470 V (47) | T | 39.2/46.4 |
| R166 | 7030003440 | S.RES | ERJ3GEYJ 102 V (1 k) | T | 34.3/44.7 |
| R167 | 7030003440 | S.RES | ERJ3GEYJ 102 V (1 k) | T | 39.2/45.1 |
| R168 | 7030003280 | S.RES | ERJ3GEYJ 470 V (47) | T | 38.8/49.8 |
| R169 | 7030003440 | S.RES | ERJ3GEYJ 102 V (1 k) | T | 38.8/51.1 |
| R170 | 7030003280 | S.RES | ERJ3GEYJ 470 V (47) | T | 31.5/58.2 |
| R171 | 7030003280 | S.RES | ERJ3GEYJ 470 V (47) | T | 31.5/56.9 |
| R172 | 7030003480 | S.RES | ERJ3GEYJ 222 V (2.2 k) | T | 32/53.7 |
| R173 | 7030003500 | S.RES | ERJ3GEYJ 332 V (3.3 k) | T | 27.2/54.9 |
| R174 | 7030003360 | S.RES | ERJ3GEYJ 221 V (220) | T | 27.2/52.3 |
| R201 | 7030010420 | S.RES | ERJ1TYJ 560U (56) | T | 49/29.7 |
| R202 | 7030010420 | S.RES | ERJ1TYJ 560U (56) | B | 49.3/29.4 |
| R203 | 7030010420 | S.RES | ERJ1TYJ 560U (56) | T | 49/33.7 |
| R204 | 7030010420 | S.RES | ERJ1TYJ 560U (56) | B | 49.3/34 |
| R205 | 7030003560 | S.RES | ERJ3GEYJ 103 V (10 k) | T | 52.3/45.4 |
| R206 | 7030003560 | S.RES | ERJ3GEYJ 103 V (10 k) | T | 57.4/41.5 |
| R207 | 7030003800 | S.RES | ERJ3GEYJ 105 V (1 M) | T | 50.1/41.9 |

M.=Mounted side (T: Mounted on the Top side, B: Mounted on the Bottom side)
S.=Surface mount

## [CTRL BOARD]

| REF NO. | ORDER NO. | DESCRIPTION | | M. | H/V LOCATION |
|---|---|---|---|---|---|
| R208 | 7030003560 | S.RES | ERJ3GEYJ 103 V (10 k) | T | 54.8/42.6 |
| R209 | 7030003520 | S.RES | ERJ3GEYJ 472 V (4.7 k) | T | 54.8/40 |
| R210 | 7030003440 | S.RES | ERJ3GEYJ 102 V (1 k) | T | 56.1/42.7 |
| R211 | 7030003480 | S.RES | ERJ3GEYJ 222 V (2.2 k) | T | 13.1/49.4 |
| R212 | 7030003560 | S.RES | ERJ3GEYJ 103 V (10 k) | T | 25.1/49.4 |
| R213 | 7030005331 | S.RES | ERA3YED 562V (5.6 k) | T | 17.8/49.9 |
| R214 | 7030005331 | S.RES | ERA3YED 562V (5.6 k) | T | 16.5/49.9 |
| R215 | 7030005871 | S.RES | ERA3YKD 104V (100 k) | T | 14/53 |
| R216 | 7030008121 | S.RES | ERA3YED 682V (6.8 k) | T | 20.6/50 |
| R217 | 7030008121 | S.RES | ERA3YED 682V (6.8 k) | T | 22.3/48.1 |
| R218 | 7030005871 | S.RES | ERA3YKD 104V (100 k) | T | 23.8/52 |
| R221 | 7030003670 | S.RES | ERJ3GEYJ 823 V (82 k) | B | 17.1/57 |
| R222 | 7030003680 | S.RES | ERJ3GEYJ 104 V (100 k) | T | 20.9/51.3 |
| R223 | 7030003820 | S.RES | ERJ3GEYJ 155 V (1.5 M) | T | 14/55.8 |
| R224 | 7030003820 | S.RES | ERJ3GEYJ 155 V (1.5 M) | T | 23.8/54.6 |
| R225 | 7030003560 | S.RES | ERJ3GEYJ 103 V (10 k) | T | 14/61.4 |
| R226 | 7030003560 | S.RES | ERJ3GEYJ 103 V (10 k) | T | 21.9/61.4 |
| R227 | 7030003560 | S.RES | ERJ3GEYJ 103 V (10 k) | T | 14.7/63.4 |
| R228 | 7030003560 | S.RES | ERJ3GEYJ 103 V (10 k) | T | 21.3/63.4 |
| R252 | 7030000230 | S.RES | MCR10EZHJ 56 (560) | T | 70.8/31.9 |
| R253 | 7030000230 | S.RES | MCR10EZHJ 56 (560) | T | 69.9/35.2 |
| R254 | 7030000230 | S.RES | MCR10EZHJ 56 (560) | T | 70.8/38.7 |
| R255 | 7030000220 | S.RES | MCR10EZHJ 47 (470) | T | 72.2/40.8 |
| R256 | 7030000230 | S.RES | MCR10EZHJ 56 (560) | T | 72.4/31 |
| R301 | 7030003560 | S.RES | ERJ3GEYJ 103 V (10 k) | T | 83.7/57.6 |
| R302 | 7030003670 | S.RES | ERJ3GEYJ 823 V (82 k) | T | 81.9/61.2 |
| R303 | 7030010910 | S.RES | ERJ1TYJ 150U (15) | B | 90.1/60.7 |
| R304 | 7030003560 | S.RES | ERJ3GEYJ 103 V (10 k) | T | 85.5/62 |
| R305 | 7030003720 | S.RES | ERJ3GEYJ 224 V (220 k) | T | 80.6/61.2 |
| R306 | 7030003660 | S.RES | ERJ3GEYJ 683 V (68 k) | T | 78.7/57.2 |
| R307 | 7030003660 | S.RES | ERJ3GEYJ 683 V (68 k) | T | 79.2/59.7 |
| R308 | 7030003840 | S.RES | ERJ3GEYJ 225 V (2.2 M) | B | 76.5/58.3 |
| R309 | 7030003720 | S.RES | ERJ3GEYJ 224 V (220 k) | T | 76.1/53.9 |
| R310 | 7030003840 | S.RES | ERJ3GEYJ 225 V (2.2 M) | T | 73.4/54 |
| R311 | 7030003440 | S.RES | ERJ3GEYJ 102 V (1 k) | T | 76/55.5 |
| R312 | 7030003560 | S.RES | ERJ3GEYJ 103 V (10 k) | T | 73.4/55.5 |
| R313 | 7030003700 | S.RES | ERJ3GEYJ 154 V (150 k) | T | 78.5/61.6 |
| R345 | 7030003560 | S.RES | ERJ3GEYJ 103 V (10 k) | T | 88.3/83.7 |
| R401 | 7030004040 | S.RES | ERJ3GEYJ 4R7 V (4.7) | T | 17.5/93.4 |
| R402 | 7030004040 | S.RES | ERJ3GEYJ 4R7 V (4.7) | T | 16.2/93.4 |
| R403 | 7030004040 | S.RES | ERJ3GEYJ 4R7 V (4.7) | T | 14.9/93.4 |
| R404 | 7030004040 | S.RES | ERJ3GEYJ 4R7 V (4.7) | T | 13.6/93.4 |
| R405 | 7030004040 | S.RES | ERJ3GEYJ 4R7 V (4.7) | T | 12.3/93.4 |
| R406 | 7030004040 | S.RES | ERJ3GEYJ 4R7 V (4.7) | T | 11/93.4 |
| R407 | 7030004040 | S.RES | ERJ3GEYJ 4R7 V (4.7) | T | 9.7/93.4 |
| R408 | 7030004040 | S.RES | ERJ3GEYJ 4R7 V (4.7) | T | 8.4/93.4 |
| R409 | 7030004040 | S.RES | ERJ3GEYJ 4R7 V (4.7) | B | 36.6/86.7 |
| R410 | 7030004040 | S.RES | ERJ3GEYJ 4R7 V (4.7) | B | 35.1/86.7 |
| R411 | 7030004040 | S.RES | ERJ3GEYJ 4R7 V (4.7) | B | 33.6/86.7 |
| R412 | 7030004040 | S.RES | ERJ3GEYJ 4R7 V (4.7) | B | 32/86.7 |
| R413 | 7030004040 | S.RES | ERJ3GEYJ 4R7 V (4.7) | B | 30.4/86.7 |
| R414 | 7030004040 | S.RES | ERJ3GEYJ 4R7 V (4.7) | B | 28.8/86.7 |
| R415 | 7030004040 | S.RES | ERJ3GEYJ 4R7 V (4.7) | B | 27.2/86.7 |
| R416 | 7030004040 | S.RES | ERJ3GEYJ 4R7 V (4.7) | B | 25.6/86.7 |
| R417 | 7030003440 | S.RES | ERJ3GEYJ 102 V (1 k) | B | 31.3/98.5 |
| R418 | 7030003440 | S.RES | ERJ3GEYJ 102 V (1 k) | B | 44.8/98.5 |
| R419 | 7030003440 | S.RES | ERJ3GEYJ 102 V (1 k) | B | 32.9/98.5 |
| R420 | 7030003440 | S.RES | ERJ3GEYJ 102 V (1 k) | B | 46.4/98.5 |
| R421 | 7030003440 | S.RES | ERJ3GEYJ 102 V (1 k) | B | 34.5/98.5 |
| R422 | 7030003440 | S.RES | ERJ3GEYJ 102 V (1 k) | B | 48/98.5 |
| R423 | 7030003440 | S.RES | ERJ3GEYJ 102 V (1 k) | B | 36.1/98.5 |
| R424 | 7030003440 | S.RES | ERJ3GEYJ 102 V (1 k) | B | 49.6/98.5 |
| R425 | 7030003440 | S.RES | ERJ3GEYJ 102 V (1 k) | B | 37.7/98.5 |
| R426 | 7030003440 | S.RES | ERJ3GEYJ 102 V (1 k) | B | 51.2/98.5 |
| R427 | 7030003440 | S.RES | ERJ3GEYJ 102 V (1 k) | B | 39.3/98.5 |
| R428 | 7030003440 | S.RES | ERJ3GEYJ 102 V (1 k) | B | 52.8/98.5 |
| R429 | 7030003440 | S.RES | ERJ3GEYJ 102 V (1 k) | B | 40.9/98.5 |
| R430 | 7030003440 | S.RES | ERJ3GEYJ 102 V (1 k) | B | 54.4/98.5 |
| R431 | 7030003440 | S.RES | ERJ3GEYJ 102 V (1 k) | B | 42.5/98.5 |
| R432 | 7030003440 | S.RES | ERJ3GEYJ 102 V (1 k) | B | 56/98.5 |
| | | | | | |
| C1 | 4510008540 | S.ELE | EEE1CA100SR | T | 42.6/80.3 |
| C2 | 4030011600 | S.CER | C1608 JB 1E 104K-T | T | 45.8/82.3 |
| C3 | 4030006880 | S.CER | C1608 JB 1H 472K-T | B | 89.5/100 |
| C4 | 4030006900 | S.CER | C1608 JB 1H 103K-T | T | 56/74.7 |
| C5 | 4030006900 | S.CER | C1608 JB 1H 103K-T | T | 58.6/72.9 |
| C6 | 4030006880 | S.CER | C1608 JB 1H 472K-T | T | 74.6/74.7 |
| C7 | 4030017810 | S.CER | C1608 CH 1H 102J-T | T | 75.3/76.6 |
| C8 | 4030011600 | S.CER | C1608 JB 1E 104K-T | T | 56/81.3 |
| C9 | 4030009990 | S.CER | C1608 CH 1H 200J-T | T | 75.3/80.5 |
| C10 | 4030011600 | S.CER | C1608 JB 1E 104K-T | T | 51.7/79.8 |
| C11 | 4030006880 | S.CER | C1608 JB 1H 472K-T | T | 76.6/78.2 |
| C12 | 4030009990 | S.CER | C1608 CH 1H 200J-T | T | 76.6/81.5 |
| C13 | 4510008870 | S.ELE | EEE1AA471UP | T | 48.5/56.6 |
| C14 | 4030011600 | S.CER | C1608 JB 1E 104K-T | T | 60.7/55.3 |
| C15 | 4030011600 | S.CER | C1608 JB 1E 104K-T | T | 67.3/53.7 |
| C16 | 4510008500 | S.ELE | EEE1CA101WP | T | 66.6/48.8 |
| C17 | 4510008550 | S.ELE | EEE1HA010SR | T | 133.3/100.5 |
| C18 | 4510008550 | S.ELE | EEE1HA010SR | T | 133.3/95.7 |
| C19 | 4510008550 | S.ELE | EEE1HA010SR | T | 138.4/91.9 |
| C20 | 4510008550 | S.ELE | EEE1HA010SR | T | 133.3/89.7 |
| C21 | 4510008550 | S.ELE | EEE1HA010SR | T | 138.4/85.3 |
| C22 | 4510008550 | S.ELE | EEE1HA010SR | T | 133.3/83.1 |
| C23 | 4510008550 | S.ELE | EEE1HA010SR | T | 138.4/78.6 |
| C24 | 4510008550 | S.ELE | EEE1HA010SR | T | 133.3/76.5 |
| C25 | 4030011600 | S.CER | C1608 JB 1E 104K-T | T | 53.6/57.7 |
| C26 | 4030006880 | S.CER | C1608 JB 1H 472K-T | T | 61/58.2 |
| C38 | 4030011600 | S.CER | C1608 JB 1E 104K-T | T | 91.3/87.5 |
| C39 | 4510008870 | S.ELE | EEE1AA471UP | T | 57.9/49.8 |
| C40 | 4030011600 | S.CER | C1608 JB 1E 104K-T | T | 84/70.6 |
| C41 | 4030011600 | S.CER | C1608 JB 1E 104K-T | T | 78.5/73.2 |
| C43 | 4030006880 | S.CER | C1608 JB 1H 472K-T | T | 88.8/95.5 |
| C66 | 4510008540 | S.ELE | EEE1CA100SR | T | 106.6/81.6 |
| C68 | 4030011600 | S.CER | C1608 JB 1E 104K-T | B | 103.6/82.8 |

## [CTRL BOARD]

| REF NO. | ORDER NO. | DESCRIPTION | | M. | H/V LOCATION |
|---|---|---|---|---|---|
| C69 | 4030011600 | S.CER | C1608 JB 1E 104K-T | T | 118.4/79.9 |
| C70 | 4030011600 | S.CER | C1608 JB 1E 104K-T | T | 95.8/80.5 |
| C71 | 4030011600 | S.CER | C1608 JB 1E 104K-T | T | 106.9/77.6 |
| C72 | 4510008540 | S.ELE | EEE1CA100SR | T | 111.6/83.3 |
| C88 | 4030011600 | S.CER | C1608 JB 1E 104K-T | B | 7.8/81.8 |
| C102 | 4010005530 | CER | HM60SJ SL 020C 500V | | |
| C103 | 4010005530 | CER | HM60SJ SL 020C 500V | | |
| C104 | 4610002250 | TRI | TZ03R200Y169B00 | | |
| C105 | 4030011540 | S.CER | C1608 CH 1H 750J-T | B | 13.1/28.5 |
| C106 | 4030011540 | S.CER | C1608 CH 1H 750J-T | T | 25.8/33.1 |
| C107 | 4030017810 | S.CER | C1608 CH 1H 102J-T | T | 12.2/36 |
| C108 | 4030017810 | S.CER | C1608 CH 1H 102J-T | T | 25.8/35.5 |
| C109 | 4030006880 | S.CER | C1608 JB 1H 472K-T | B | 21.6/38.4 |
| C110 | 4030006880 | S.CER | C1608 JB 1H 472K-T | B | 18.5/38.4 |
| C111 | 4510008540 | S.ELE | EEE1CA100SR | T | 25.4/45.8 |
| C112 | 4510008540 | S.ELE | EEE1CA100SR | T | 18.8/46.4 |
| C113 | 4030006880 | S.CER | C1608 JB 1H 472K-T | T | 16.3/41.8 |
| C114 | 4030006880 | S.CER | C1608 JB 1H 472K-T | T | 23/41.8 |
| C115 | 4030007100 | S.CER | C1608 CH 1H 560J-T | B | 13.1/26.9 |
| C116 | 4030011540 | S.CER | C1608 CH 1H 750J-T | T | 25.8/34.3 |
| C119 | 4030007100 | S.CER | C1608 CH 1H 560J-T | T | 16.9/24.1 |
| C151 | 4010005540 | CER | HM60SJ SL 030C 500V | | |
| C152 | 4030007070 | S.CER | C1608 CH 1H 330J-T | T | 33/34.3 |
| C153 | 4030007120 | S.CER | C1608 CH 1H 820J-T | T | 32.3/35.6 |
| C154 | 4030007070 | S.CER | C1608 CH 1H 330J-T | T | 38.5/34.5 |
| C155 | 4030007120 | S.CER | C1608 CH 1H 820J-T | T | 35.9/34.5 |
| C156 | 4030006880 | S.CER | C1608 JB 1H 472K-T | T | 29.8/37.5 |
| C157 | 4030006880 | S.CER | C1608 JB 1H 472K-T | T | 41.6/38.4 |
| C158 | 4030007060 | S.CER | C1608 CH 1H 270J-T | T | 29.7/35.6 |
| C159 | 4030006880 | S.CER | C1608 JB 1H 472K-T | T | 34.4/38.4 |
| C161 | 4030006880 | S.CER | C1608 JB 1H 472K-T | T | 45.2/51.5 |
| C162 | 4550003120 | S.TAN | TEESVD2 1A 476M12R | T | 46.7/46.3 |
| C163 | 4030007170 | S.CER | C1608 CH 1H 221J-T | T | 30.1/59.5 |
| C164 | 4030007170 | S.CER | C1608 CH 1H 221J-T | T | 31.5/55.6 |
| C165 | 4030006880 | S.CER | C1608 JB 1H 472K-T | T | 31.5/51.7 |
| C171 | 4030006880 | S.CER | C1608 JB 1H 472K-T | B | 40.2/37.7 |
| C173 | 4030006880 | S.CER | C1608 JB 1H 472K-T | T | 28.3/48.4 |
| C174 | 4030006880 | S.CER | C1608 JB 1H 472K-T | T | 42.2/49.6 |
| C175 | 4030006880 | S.CER | C1608 JB 1H 472K-T | T | 35.9/49.8 |
| C180 | 4030011600 | S.CER | C1608 JB 1E 104K-T | T | 28.3/49.7 |
| C181 | 4030011600 | S.CER | C1608 JB 1E 104K-T | T | 42.2/48.3 |
| C201 | 4010005580 | CER | HM60SJ SL 070D 500V | | |
| C202 | 4010005520 | CER | HM60SJ SL 010C 500V | | |
| C204 | 4030011570 | S.CER | CM105 CH 101G 50AT | T | 55.3/36.9 |
| C205 | 4030016550 | S.CER | CM105 CH 151G 50AT | T | 51.4/36.9 |
| C206 | 4030009530 | S.CER | C1608 CH 1H 030B-T | T | 52.7/36.9 |
| C207 | 4030006880 | S.CER | C1608 JB 1H 472K-T | T | 49.8/39.3 |
| C208 | 4030006880 | S.CER | C1608 JB 1H 472K-T | T | 56.1/40 |
| C209 | 4030017810 | S.CER | C1608 CH 1H 102J-T | T | 51.7/40 |
| C210 | 4030006880 | S.CER | C1608 JB 1H 472K-T | T | 53.5/40 |
| C211 | 4030006880 | S.CER | C1608 JB 1H 472K-T | T | 14.4/49.4 |
| C212 | 4030006880 | S.CER | C1608 JB 1H 472K-T | T | 23.8/49.4 |
| C213 | 4030006880 | S.CER | C1608 JB 1H 472K-T | B | 19.7/55.7 |
| C214 | 4030007170 | S.CER | C1608 CH 1H 221J-T | T | 14.7/59.4 |
| C215 | 4030007170 | S.CER | C1608 CH 1H 221J-T | T | 21.4/59.4 |
| C216 | 4030011340 | S.CER | C1608 CH 1H 471J-T | T | 15.4/61.4 |
| C217 | 4030011340 | S.CER | C1608 CH 1H 471J-T | T | 20.6/61.4 |
| C218 | 4030006880 | S.CER | C1608 JB 1H 472K-T | B | 18.2/54.1 |
| C252 | 4030006880 | S.CER | C1608 JB 1H 472K-T | T | 72.9/33.3 |
| C253 | 4030006880 | S.CER | C1608 JB 1H 472K-T | T | 76.6/38.3 |
| C254 | 4030006880 | S.CER | C1608 JB 1H 472K-T | T | 72.9/48.1 |
| C255 | 4030006880 | S.CER | C1608 JB 1H 472K-T | T | 73/38.2 |
| C301 | 4010005520 | CER | HM60SJ SL 010C 500V | | |
| C302 | 4030007030 | S.CER | C1608 CH 1H 150J-T | T | 85.5/56.6 |
| C303 | 4030007050 | S.CER | C1608 CH 1H 220J-T | T | 85.5/59.2 |
| C304 | 4030017810 | S.CER | C1608 CH 1H 102J-T | T | 83.7/60.5 |
| C305 | 4030017810 | S.CER | C1608 CH 1H 102J-T | T | 90.3/61.3 |
| C307 | 4030006880 | S.CER | C1608 JB 1H 472K-T | T | 78.7/55.8 |
| C308 | 4030006880 | S.CER | C1608 JB 1H 472K-T | T | 77.9/59.7 |
| C309 | 4030011600 | S.CER | C1608 JB 1E 104K-T | T | 68.8/59.8 |
| C310 | 4030009530 | S.CER | C1608 CH 1H 030B-T | T | 85.5/57.9 |
| C417 | 4510008540 | S.ELE | EEE1CA100SR | T | 22.6/77.6 |
| C418 | 4510008540 | S.ELE | EEE1CA100SR | T | 40.6/85.6 |
| C419 | 4030006880 | S.CER | C1608 JB 1H 472K-T | T | 19.6/78.7 |
| C420 | 4030006880 | S.CER | C1608 JB 1H 472K-T | T | 38.4/79.2 |
| | | | | | |
| RL251 | 6330001530 | RLY | NR-HD (5V) AE5349 | | |
| RL252 | 6330001460 | RLY | FTR-F1CA012V | | |
| RL253 | 6330001460 | RLY | FTR-F1CA012V | | |
| | | | | | |
| CP1 | 6910009670 | S.CHK | HK3-S-T | T | 67.7/100.1 |
| CP101 | 6910009670 | S.CHK | HK3-S-T | T | 5/83.4 |
| | | | | | |
| J1 | 6510023771 | S.CNR | 52793-2470 (2490) | T | 101.8/99.6 |
| J2 | 6510023761 | S.CNR | S10B-PH-SM4-TB (LF) (SN) | T | 148.3/82.8 |
| J51 | 6510023771 | S.CNR | 52793-2470 (2490) | T | 43.9/99.6 |
| J52 | 6510022031 | S.CNR | B10B-ZR-SM4-TF (LF) (SN) | T | 133/2.9 |
| J53 | 6510021431 | S.CNR | S8B-ZR-SM4A-TF (LF) (SN) | T | 134.6/65 |
| J101 | 6510017920 | CNR | 1811P342 | | |
| J251 | 6510017920 | CNR | 1811P342 | | |
| J252 | 6510017920 | CNR | 1811P342 | | |
| J301 | 6510017920 | CNR | 1811P342 | | |
| J351 | 6510007020 | CNR | TMP-J01X-V6 | | |
| | | | | | |
| W1 | 9029804001 | WIR | 72/99/040/X98/X98 | | |
| | | | | | |
| EP1 | 9040902903 | TUB | IRRAX 0.7 (d) L=22 mm | | |

M.=Mounted side (T: Mounted on the Top side, B: Mounted on the Bottom side)
S.=Surface mount

## [ANT-SW UNIT]

| REF NO. | ORDER NO. | DESCRIPTION | | M. | H/V LOCATION |
|---|---|---|---|---|---|
| IC11 | 1130011510 | S.IC | BU2099FV-E2 | T | 160.6/33.6 |
| IC12 | 1180002391 | S.REG | S-812C33AMC-C2N-G | T | 152.4/28.7 |
| Q11 | 1590001001 | S.TR | RN2427(RE85R,F) | T | 156.9/38.6 |
| Q12 | 1590001001 | S.TR | RN2427(RE85R,F) | T | 152.3/36.9 |
| Q13 | 1590001001 | S.TR | RN2427(RE85R,F) | T | 164.7/38.5 |
| Q14 | 1590001001 | S.TR | RN2427(RE85R,F) | T | 164.7/17.5 |
| D51 | 1750000550 | S.DIO | 1SS355 TE-17 | T | 161.9/13.3 |
| D52 | 1750000550 | S.DIO | 1SS355 TE-17 | T | 140.3/42.9 |
| D53 | 1750000550 | S.DIO | 1SS355 TE-17 | T | 115.1/41.4 |
| D61 | 1750000550 | S.DIO | 1SS355 TE-17 | T | 118.9/19.7 |
| D62 | 1750000550 | S.DIO | 1SS355 TE-17 | T | 107.1/43 |
| D63 | 1750000550 | S.DIO | 1SS355 TE-17 | T | 79/43.6 |
| D71 | 1750000550 | S.DIO | 1SS355 TE-17 | T | 68.7/21.4 |
| D72 | 1750000550 | S.DIO | 1SS355 TE-17 | T | 61.6/42.9 |
| D73 | 1750000550 | S.DIO | 1SS355 TE-17 | T | 65.8/43.4 |
| D81 | 1750000550 | S.DIO | 1SS355 TE-17 | T | 36.9/19.7 |
| D82 | 1750000550 | S.DIO | 1SS355 TE-17 | T | 41.4/45.2 |
| D83 | 1750000550 | S.DIO | 1SS355 TE-17 | T | 28.2/45.3 |
| D84 | 1750000550 | S.DIO | 1SS355 TE-17 | T | 25.8/43 |
| L1 | 6200003590 | S.COL | EXCCL3225U1 | T | 155.7/27.5 |
| L2 | 6110001670 | COL | LA-253 | | |
| R1 | 7540000100 | ABS | SRYH-350L | | |
| R2 | 7540000130 | ABS | 2P-50A-301 | | |
| R3 | 7540000130 | ABS | 2P-50A-301 | | |
| R11 | 7030003320 | S.RES | ERJ3GEYJ 101 V (100) | T | 165.5/27.4 |
| R12 | 7030003320 | S.RES | ERJ3GEYJ 101 V (100) | T | 164.2/27.4 |
| R13 | 7030003320 | S.RES | ERJ3GEYJ 101 V (100) | T | 162.9/27.4 |
| R14 | 7030003320 | S.RES | ERJ3GEYJ 101 V (100) | T | 166.2/33.9 |
| R15 | 7030003320 | S.RES | ERJ3GEYJ 101 V (100) | T | 148.7/31.6 |
| R16 | 7030003320 | S.RES | ERJ3GEYJ 101 V (100) | T | 151.5/31.6 |
| R17 | 7030003320 | S.RES | ERJ3GEYJ 101 V (100) | T | 154.7/39.4 |
| R18 | 7030003320 | S.RES | ERJ3GEYJ 101 V (100) | T | 151.4/32.9 |
| R19 | 7030003320 | S.RES | ERJ3GEYJ 101 V (100) | T | 151.4/34.2 |
| R20 | 7030003320 | S.RES | ERJ3GEYJ 101 V (100) | T | 152.1/39.1 |
| R21 | 7030003320 | S.RES | ERJ3GEYJ 101 V (100) | T | 154.7/36.6 |
| R22 | 7030003320 | S.RES | ERJ3GEYJ 101 V (100) | T | 166.9/38.7 |
| R23 | 7030003320 | S.RES | ERJ3GEYJ 101 V (100) | T | 162.3/38.9 |
| R24 | 7030003320 | S.RES | ERJ3GEYJ 101 V (100) | T | 161/39.1 |
| R25 | 7030003320 | S.RES | ERJ3GEYJ 101 V (100) | T | 159.7/39.1 |
| R26 | 7030003320 | S.RES | ERJ3GEYJ 101 V (100) | T | 162.7/15.6 |
| C1 | 4010005610 | CER | HM60SJ SL 100D 500V | | |
| C2 | 4010005660 | CER | HM60SJ SL 220J 500V | | |
| C11 | 4030011600 | S.CER | C1608 JB 1E 104K-T | T | 160/27.6 |
| C12 | 4030011600 | S.CER | C1608 JB 1E 104K-T | T | 158.7/27.6 |
| C51 | 4030006880 | S.CER | C1608 JB 1H 472K-T | T | 163.5/13.6 |
| C52 | 4030006880 | S.CER | C1608 JB 1H 472K-T | T | 144.5/41.3 |
| C53 | 4030006880 | S.CER | C1608 JB 1H 472K-T | T | 113.5/41.7 |
| C61 | 4030006880 | S.CER | C1608 JB 1H 472K-T | T | 119.2/21.3 |
| C62 | 4030006880 | S.CER | C1608 JB 1H 472K-T | T | 107.4/44.5 |
| C63 | 4030006880 | S.CER | C1608 JB 1H 472K-T | T | 77.5/43.6 |
| C71 | 4030006880 | S.CER | C1608 JB 1H 472K-T | T | 69/19.9 |
| C72 | 4030006880 | S.CER | C1608 JB 1H 472K-T | T | 61.6/44.5 |
| C73 | 4030006880 | S.CER | C1608 JB 1H 472K-T | T | 73/43.4 |
| C81 | 4030006880 | S.CER | C1608 JB 1H 472K-T | T | 37.2/21.3 |
| C82 | 4030006880 | S.CER | C1608 JB 1H 472K-T | T | 42.9/45.2 |
| C83 | 4030006880 | S.CER | C1608 JB 1H 472K-T | T | 26.6/45.6 |
| C84 | 4030006880 | S.CER | C1608 JB 1H 472K-T | T | 25/45.6 |
| RL51 | 6330001460 | RLY | FTR-F1CA012V | | |
| RL52 | 6330001780 | RLY | FTR-MYAA012D | | |
| RL53 | 6330001780 | RLY | FTR-MYAA012D | | |
| RL61 | 6330001460 | RLY | FTR-F1CA012V | | |
| RL62 | 6330001780 | RLY | FTR-MYAA012D | | |
| RL63 | 6330001780 | RLY | FTR-MYAA012D | | |
| RL71 | 6330001460 | RLY | FTR-F1CA012V | | |
| RL72 | 6330001780 | RLY | FTR-MYAA012D | | |
| RL73 | 6330001780 | RLY | FTR-MYAA012D | | |
| RL81 | 6330001460 | RLY | FTR-F1CA012V | | |
| RL82 | 6330001780 | RLY | FTR-MYAA012D | | |
| RL83 | 6330001780 | RLY | FTR-MYAA012D | | |
| RL84 | 6330001780 | RLY | FTR-MYAA012D | | |
| J1 | 6510017930 | CNR | 1771P145-20 | | |
| J2 | 6510007020 | CNR | TMP-J01X-V6 | | |
| J3 | 6510007020 | CNR | TMP-J01X-V6 | | |
| J4 | 6510019971 | S.CNR | 52808-1071 | T | 153/22 |
| J51 | 6510000410 | CNR | MR-DS-E 02 | | |
| J61 | 6510000410 | CNR | MR-DS-E 02 | | |
| J71 | 6510000410 | CNR | MR-DS-E 02 | | |
| J81 | 6510000410 | CNR | MR-DS-E 02 | | |

## [OSC UNIT]

| REF NO. | ORDER NO. | DESCRIPTION | | M. | H/V LOCATION |
|---|---|---|---|---|---|
| IC10 | 1180002610 | S.REG | BA12FP-E2 | T | 37.8/20 |
| IC91 | 1190002001 | S.IC | AD5260BRUZ50 | T | 26.8/12 |
| IC92 | 1130005721 | S.IC | TC7W04F (TE12L,F) | T | 23.7/6.1 |
| Q10 | 1590000680 | S.TR | DTC114EUA T106 | T | 32.4/35 |
| Q11 | 1590000680 | S.TR | DTC114EUA T106 | T | 22.1/42.4 |
| Q12 | 1590000680 | S.TR | DTC114EUA T106 | T | 29.1/41.5 |
| Q13 | 1590000680 | S.TR | DTC114EUA T106 | T | 31.6/41.5 |
| Q21 | 1530002060 | S.TR | 2SC4081 T106 R | T | 11.3/6.3 |
| Q22 | 1530002601 | S.TR | 2SC4215-O (TE85R,F) | T | 10.4/17.8 |
| Q23 | 1590000680 | S.TR | DTC114EUA T106 | T | 13/11 |
| Q42 | 1530002601 | S.TR | 2SC4215-O (TE85R,F) | T | 18.8/18.8 |
| Q43 | 1590000680 | S.TR | DTC114EUA T106 | T | 19.6/11.7 |
| Q61 | 1530002060 | S.TR | 2SC4081 T106 R | T | 26.1/36.1 |
| Q62 | 1530002060 | S.TR | 2SC4081 T106 R | T | 20.6/38.6 |
| Q70 | 1530002060 | S.TR | 2SC4081 T106 R | T | 9.9/41.2 |
| Q101 | 1530002700 | S.TR | 2SC4097 T106Q | T | 36.7/40 |
| D10 | 1790001250 | S.DIO | MA2S111-(TX) | T | 31.4/31.7 |
| D11 | 1790001250 | S.DIO | MA2S111-(TX) | T | 16.5/38.2 |
| D71 | 1750000381 | S.DIO | 1SS312 (TE85L,F) | T | 29.8/34.9 |
| D72 | 1750000381 | S.DIO | 1SS312 (TE85L,F) | T | 29.9/37.6 |
| X1 | 6050012210 | XTL | CR-772.OCVXO-148A | | |
| L1 | 6200003950 | S.COL | HF50ACC 322513-T | T | 38.8/43.7 |
| L2 | 6200003950 | S.COL | HF50ACC 322513-T | T | 35.8/43.7 |
| L10 | 6200003950 | S.COL | HF50ACC 322513-T | T | 94.7/30.6 |
| L20 | 6200005491 | S.COL | NLV32T-331J | T | 14.7/1.9 |
| L21 | 6200003261 | S.COL | NLV32T-101J | T | 6.9/11.2 |
| L22 | 6200003261 | S.COL | NLV32T-101J | T | 7.9/14.7 |
| L23 | 6200003041 | S.COL | NLV32T-R68J | T | 6.9/20.3 |
| L24 | 6200003051 | S.COL | NLV32T-R82J | T | 6.2/23.8 |
| L41 | 6200003261 | S.COL | NLV32T-101J | T | 15.3/13.7 |
| L42 | 6200003261 | S.COL | NLV32T-101J | T | 14.7/17.2 |
| L43 | 6200003041 | S.COL | NLV32T-R68J | T | 15.3/22.4 |
| L44 | 6200003051 | S.COL | NLV32T-R82J | T | 18.8/24.2 |
| L61 | 6150004170 | COL | LS-476 | | |
| L62 | 6150004170 | COL | LS-476 | | |
| L91 | 6200003950 | S.COL | HF50ACC 322513-T | T | 23.6/20.3 |
| L92 | 6200003950 | S.COL | HF50ACC 322513-T | T | 19.4/4.3 |
| R1 | 7030003440 | S.RES | ERJ3GEYJ 102 V (1 k) | T | 32.4/44.3 |
| R2 | 7030003440 | S.RES | ERJ3GEYJ 102 V (1 k) | T | 29.8/44.2 |
| R3 | 7030003440 | S.RES | ERJ3GEYJ 102 V (1 k) | T | 25.8/44.2 |
| R11 | 7030003200 | S.RES | ERJ3GEYJ 100 V (10) | T | 33.3/32.3 |
| R12 | 7030003200 | S.RES | ERJ3GEYJ 100 V (10) | T | 16.7/40.3 |
| R13 | 7030003440 | S.RES | ERJ3GEYJ 102 V (1 k) | T | 16.8/11.6 |
| R20 | 7030003240 | S.RES | ERJ3GEYJ 220 V (22) | T | 11.3/1.8 |
| R21 | 7030003560 | S.RES | ERJ3GEYJ 103 V (10 k) | T | 11.1/4.4 |
| R22 | 7030003370 | S.RES | ERJ3GEYJ 271 V (270) | T | 15.5/7.9 |
| R23 | 7030004040 | S.RES | ERJ3GEYJ 4R7 V (4.7) | T | 11.4/14 |
| R24 | 7030003370 | S.RES | ERJ3GEYJ 271 V (270) | T | 12.3/17.7 |
| R25 | 7030003500 | S.RES | ERJ3GEYJ 332 V (3.3 k) | T | 10.1/14.2 |
| R26 | 7030003480 | S.RES | ERJ3GEYJ 222 V (2.2 k) | T | 12.8/9.1 |
| R27 | 7030003360 | S.RES | ERJ3GEYJ 221 V (220) | T | 5.8/13.9 |
| R28 | 7030003440 | S.RES | ERJ3GEYJ 102 V (1 k) | T | 10.2/11.9 |
| R43 | 7030003240 | S.RES | ERJ3GEYJ 220 V (22) | T | 19.7/14.2 |
| R44 | 7030003370 | S.RES | ERJ3GEYJ 271 V (270) | T | 20.7/18.6 |
| R45 | 7030003500 | S.RES | ERJ3GEYJ 332 V (3.3 k) | T | 17.9/15.1 |
| R46 | 7030003480 | S.RES | ERJ3GEYJ 222 V (2.2 k) | T | 19.4/9.8 |
| R47 | 7030003290 | S.RES | ERJ3GEYJ 560 V (56) | T | 16.8/17.9 |
| R61 | 7030003240 | S.RES | ERJ3GEYJ 220 V (22) | T | 22.2/35.4 |
| R62 | 7030003560 | S.RES | ERJ3GEYJ 103 V (10 k) | T | 26.3/34.2 |
| R63 | 7030003380 | S.RES | ERJ3GEYJ 331 V (330) | T | 25.9/38 |
| R64 | 7030003280 | S.RES | ERJ3GEYJ 470 V (47) | T | 20.8/40.5 |
| R65 | 7030003400 | S.RES | ERJ3GEYJ 471 V (470) | T | 20/34.8 |
| R67 | 7030003560 | S.RES | ERJ3GEYJ 103 V (10 k) | T | 19.6/36.7 |
| R68 | 7030003550 | S.RES | ERJ3GEYJ 822 V (8.2 k) | T | 22.2/36.7 |
| R71 | 7030003340 | S.RES | ERJ3GEYJ 151 V (150) | T | 32.6/38.2 |
| R72 | 7030003270 | S.RES | ERJ3GEYJ 390 V (39) | T | 31.2/39.5 |
| R73 | 7030003340 | S.RES | ERJ3GEYJ 151 V (150) | T | 28.6/39.5 |
| R75 | 7030003280 | S.RES | ERJ3GEYJ 470 V (47) | T | 16.2/43.1 |
| R77 | 7030003320 | S.RES | ERJ3GEYJ 101 V (100) | T | 12.5/44.6 |
| R78 | 7030003470 | S.RES | ERJ3GEYJ 182 V (1.8 k) | T | 8/41 |
| R79 | 7030003480 | S.RES | ERJ3GEYJ 222 V (2.2 k) | T | 6.1/41.6 |
| R80 | 7030003360 | S.RES | ERJ3GEYJ 221 V (220) | T | 11.8/41 |
| R82 | 7030003280 | S.RES | ERJ3GEYJ 470 V (47) | T | 17.5/43.1 |
| R91 | 7030006091 | S.RES | ERA3YED 822V (8.2 k) | T | 19.5/7.1 |
| R92 | 7030005341 | S.RES | ERA3YED 332V (3.3 k) | T | 19.5/8.4 |
| R93 | 7030003560 | S.RES | ERJ3GEYJ 103 V (10 k) | T | 25.6/1.4 |
| R94 | 7030003540 | S.RES | ERJ3GEYJ 682 V (6.8 k) | T | 25.6/2.7 |
| R95 | 7030003320 | S.RES | ERJ3GEYJ 101 V (100) | T | 22.4/16.7 |
| R96 | 7030003440 | S.RES | ERJ3GEYJ 102 V (1 k) | T | 32/14.1 |
| R97 | 7030003440 | S.RES | ERJ3GEYJ 102 V (1 k) | T | 28.6/16.1 |
| R98 | 7030003640 | S.RES | ERJ3GEYJ 473 V (47 k) | T | 27.3/16.1 |
| R99 | 7030003480 | S.RES | ERJ3GEYJ 222 V (2.2 k) | T | 22.4/10.1 |
| R100 | 7030003640 | S.RES | ERJ3GEYJ 473 V (47 k) | T | 27.2/6.4 |
| R101 | 7030003360 | S.RES | ERJ3GEYJ 221 V (220) | T | 36.9/38.1 |
| R102 | 7030005981 | S.RES | ERA3YED 333V (33 k) | T | 32.4/6.7 |
| C1 | 4030006880 | S.CER | C1608 JB 1H 472K-T | T | 39.6/47.6 |
| C2 | 4030006880 | S.CER | C1608 JB 1H 472K-T | T | 31.1/44.3 |
| C3 | 4030006880 | S.CER | C1608 JB 1H 472K-T | T | 33.7/44 |
| C4 | 4030006880 | S.CER | C1608 JB 1H 472K-T | T | 30.5/8.6 |
| C5 | 4510008550 | S.ELE | EEE1HA010SR | T | 30.6/2.6 |
| C6 | 4030006880 | S.CER | C1608 JB 1H 472K-T | T | 35/3.4 |
| C7 | 4510008550 | S.ELE | EEE1HA010SR | T | 38.7/2.6 |

M.=Mounted side (T: Mounted on the Top side, B: Mounted on the Bottom side)
S.=Surface mount

## [OSC UNIT]

| REF NO. | ORDER NO. | DESCRIPTION | | M. | H/V LOCATION |
|---|---|---|---|---|---|
| C8 | 4030011600 | S.CER | C1608 JB 1E 104K-T | T | 17.3/2.1 |
| C9 | 4030006880 | S.CER | C1608 JB 1H 472K-T | T | 27.1/43.1 |
| C10 | 4510008680 | S.ELE | EEE1EA220SP | T | 29.7/21.3 |
| C11 | 4030004760 | S.CER | C2012 JF 1H 104Z-T | T | 35.9/13 |
| C12 | 4030006880 | S.CER | C1608 JB 1H 472K-T | T | 39.2/12.8 |
| C13 | 4510008680 | S.ELE | EEE1EA220SP | T | 37.1/8.6 |
| C14 | 4030006880 | S.CER | C1608 JB 1H 472K-T | T | 94.7/33.9 |
| C15 | 4030011600 | S.CER | C1608 JB 1E 104K-T | T | 39.2/14.1 |
| C16 | 4030011600 | S.CER | C1608 JB 1E 104K-T | T | 29.6/32.3 |
| C17 | 4030011600 | S.CER | C1608 JB 1E 104K-T | T | 19.4/41.8 |
| C18 | 4030011600 | S.CER | C1608 JB 1E 104K-T | T | 17.8/38.3 |
| C19 | 4030011600 | S.CER | C1608 JB 1E 104K-T | T | 31.5/33 |
| C20 | 4030011600 | S.CER | C1608 JB 1E 104K-T | T | 13.3/5.2 |
| C21 | 4030011600 | S.CER | C1608 JB 1E 104K-T | T | 11.3/3.1 |
| C22 | 4030011600 | S.CER | C1608 JB 1E 104K-T | T | 15/11 |
| C23 | 4030011600 | S.CER | C1608 JB 1E 104K-T | T | 11.9/15.8 |
| C24 | 4030011600 | S.CER | C1608 JB 1E 104K-T | T | 12.7/14 |
| C25 | 4030011600 | S.CER | C1608 JB 1E 104K-T | T | 10.2/19.8 |
| C26 | 4030017800 | S.CER | C1608 CH 1H 561J-T | T | 10.2/21.1 |
| C27 | 4030007120 | S.CER | C1608 CH 1H 820J-T | T | 7.7/18.2 |
| C28 | 4030011340 | S.CER | C1608 CH 1H 471J-T | T | 8.9/22.5 |
| C29 | 4030011330 | S.CER | C1608 CH 1H 391J-T | T | 10.2/23.8 |
| C30 | 4030007050 | S.CER | C1608 CH 1H 220J-T | T | 8.4/24.5 |
| C31 | 4030017800 | S.CER | C1608 CH 1H 561J-T | T | 10.2/25.1 |
| C32 | 4030011600 | S.CER | C1608 JB 1E 104K-T | T | 10.8/9.2 |
| C33 | 4030011600 | S.CER | C1608 JB 1E 104K-T | T | 9.5/10.1 |
| C42 | 4030011600 | S.CER | C1608 JB 1E 104K-T | T | 21.6/12.7 |
| C43 | 4030011600 | S.CER | C1608 JB 1E 104K-T | T | 20.1/16.8 |
| C44 | 4030011600 | S.CER | C1608 JB 1E 104K-T | T | 19.9/15.5 |
| C45 | 4030011600 | S.CER | C1608 JB 1E 104K-T | T | 13.2/20.6 |
| C46 | 4030017800 | S.CER | C1608 CH 1H 561J-T | T | 15/19.8 |
| C47 | 4030007120 | S.CER | C1608 CH 1H 820J-T | T | 13.2/23.2 |
| C48 | 4030011340 | S.CER | C1608 CH 1H 471J-T | T | 17.5/21.5 |
| C49 | 4030011330 | S.CER | C1608 CH 1H 391J-T | T | 18.8/21.5 |
| C50 | 4030007050 | S.CER | C1608 CH 1H 220J-T | T | 20.6/22.1 |
| C51 | 4030017800 | S.CER | C1608 CH 1H 561J-T | T | 21.7/24.4 |
| C52 | 4030011600 | S.CER | C1608 JB 1E 104K-T | T | 17.6/8.8 |
| C53 | 4030011600 | S.CER | C1608 JB 1E 104K-T | T | 16.3/9.7 |
| C61 | 4030011600 | S.CER | C1608 JB 1E 104K-T | T | 26.3/32.9 |
| C62 | 4030011600 | S.CER | C1608 JB 1E 104K-T | T | 24.1/36.1 |
| C63 | 4030011600 | S.CER | C1608 JB 1E 104K-T | T | 25.9/39.3 |
| C64 | 4030011600 | S.CER | C1608 JB 1E 104K-T | T | 22.7/34.1 |
| C66 | 4030007010 | S.CER | C1608 CH 1H 100D-T | T | 12.8/25.1 |
| C67 | 4030011600 | S.CER | C1608 JB 1E 104K-T | T | 17/35.4 |
| C71 | 4030006880 | S.CER | C1608 JB 1H 472K-T | T | 33.8/39.5 |
| C72 | 4030006880 | S.CER | C1608 JB 1H 472K-T | T | 14.4/45.4 |
| C73 | 4030006880 | S.CER | C1608 JB 1H 472K-T | T | 6.1/40.3 |
| C74 | 4030006880 | S.CER | C1608 JB 1H 472K-T | T | 10/43.2 |
| C75 | 4030006880 | S.CER | C1608 JB 1H 472K-T | T | 13.1/40.9 |
| C76 | 4030006880 | S.CER | C1608 JB 1H 472K-T | T | 19.4/45.4 |
| C77 | 4030011600 | S.CER | C1608 JB 1E 104K-T | T | 10.7/44.6 |
| C91 | 4030006880 | S.CER | C1608 JB 1H 472K-T | T | 25.5/16.4 |
| C92 | 4030006880 | S.CER | C1608 JB 1H 472K-T | T | 17.3/4.7 |
| C93 | 4030006880 | S.CER | C1608 JB 1H 472K-T | T | 22.1/2.7 |
| C94 | 4030006880 | S.CER | C1608 JB 1H 472K-T | T | 27.9/8.6 |
| C101 | 4550006480 | S.TAN | TEESVA 1C 475M8R | T | 40/38.9 |
| RL10 | 6330001750 | RLY | FTR-B4CA012Z | | |
| RL11 | 6330001750 | RLY | FTR-B4CA012Z | | |
| J2 | 6510019971 | S.CNR | 52808-1071 | T | 30.5/48.8 |
| J71 | 6510007020 | CNR | TMP-J01X-V6 | | |
| J72 | 6510007020 | CNR | TMP-J01X-V6 | | |
| J73 | 6510007020 | CNR | TMP-J01X-V6 | | |

## [DIGISEL UNIT]

| REF NO. | ORDER NO. | DESCRIPTION | | M. | H/V LOCATION |
|---|---|---|---|---|---|
| IC1 | 1130014370 | S.IC | CAT24C256XI | B | 18.9/51.9 |
| IC4 | 1130011510 | S.IC | BU2099FV-E2 | T | 29.9/55.8 |
| IC5 | 1130011510 | S.IC | BU2099FV-E2 | T | 18.5/55.8 |
| IC501 | 1130014370 | S.IC | CAT24C256XI | B | 17.5/26.4 |
| IC504 | 1130011510 | S.IC | BU2099FV-E2 | T | 28.3/29.2 |
| IC505 | 1130011510 | S.IC | BU2099FV-E2 | T | 18.1/29.3 |
| Q201 | 1530003851 | S.TR | 2SC5551F-TD-E | T | 48.5/52.8 |
| Q701 | 1530003851 | S.TR | 2SC5551F-TD-E | T | 49.7/21.3 |
| D21 | 1750000550 | S.DIO | 1SS355 TE-17 | B | 28.5/45.9 |
| D51 | 1750000550 | S.DIO | 1SS355 TE-17 | B | 60.7/57.2 |
| D52 | 1750000550 | S.DIO | 1SS355 TE-17 | B | 61.6/44.8 |
| D53 | 1750000550 | S.DIO | 1SS355 TE-17 | T | 53.1/59.2 |
| D54 | 1750000550 | S.DIO | 1SS355 TE-17 | B | 90.2/68.2 |
| D55 | 1750000550 | S.DIO | 1SS355 TE-17 | B | 69.5/68.4 |
| D56 | 1750000550 | S.DIO | 1SS355 TE-17 | B | 67.3/55.1 |
| D57 | 1750000550 | S.DIO | 1SS355 TE-17 | T | 66/48.7 |
| D58 | 1750000550 | S.DIO | 1SS355 TE-17 | B | 114.3/50.2 |
| D59 | 1750000550 | S.DIO | 1SS355 TE-17 | B | 90.5/51 |
| D60 | 1750000550 | S.DIO | 1SS355 TE-17 | B | 90.5/54.4 |
| D61 | 1750000550 | S.DIO | 1SS355 TE-17 | B | 114.3/53.5 |
| D62 | 1750000550 | S.DIO | 1SS355 TE-17 | B | 138.2/50.2 |
| D63 | 1750000550 | S.DIO | 1SS355 TE-17 | B | 138.2/53.7 |
| D64 | 1750000550 | S.DIO | 1SS355 TE-17 | B | 162.1/50.1 |
| D65 | 1750000550 | S.DIO | 1SS355 TE-17 | B | 162.1/53.7 |
| D66 | 1750000550 | S.DIO | 1SS355 TE-17 | B | 180.9/47.7 |
| D67 | 1750000550 | S.DIO | 1SS355 TE-17 | B | 114.3/57.2 |
| D68 | 1750000550 | S.DIO | 1SS355 TE-17 | T | 85.8/64.1 |
| D69 | 1750000550 | S.DIO | 1SS355 TE-17 | B | 183.4/63 |
| D70 | 1750000550 | S.DIO | 1SS355 TE-17 | B | 162.1/61.3 |
| D71 | 1750000550 | S.DIO | 1SS355 TE-17 | B | 162.1/57.5 |
| D72 | 1750000550 | S.DIO | 1SS355 TE-17 | B | 138.2/61.3 |
| D73 | 1750000550 | S.DIO | 1SS355 TE-17 | B | 138.2/57.5 |
| D74 | 1750000550 | S.DIO | 1SS355 TE-17 | B | 114.3/61.4 |
| D75 | 1750000550 | S.DIO | 1SS355 TE-17 | B | 90.5/59.1 |
| D201 | 1710001240 | DIO | L204BBB | | |
| D202 | 1710001240 | DIO | L204BBB | | |
| D203 | 1750000550 | S.DIO | 1SS355 TE-17 | B | 48.3/73.3 |
| D204 | 1750000550 | S.DIO | 1SS355 TE-17 | B | 46.1/73.3 |
| D205 | 1750000550 | S.DIO | 1SS355 TE-17 | B | 44.8/69.7 |
| D521 | 1750000550 | S.DIO | 1SS355 TE-17 | B | 25/35.2 |
| D551 | 1750000550 | S.DIO | 1SS355 TE-17 | B | 63.7/9.2 |
| D552 | 1750000550 | S.DIO | 1SS355 TE-17 | B | 61.7/23 |
| D553 | 1750000550 | S.DIO | 1SS355 TE-17 | B | 58/8.5 |
| D554 | 1750000550 | S.DIO | 1SS355 TE-17 | B | 91/12.8 |
| D555 | 1750000550 | S.DIO | 1SS355 TE-17 | T | 68.6/11.7 |
| D556 | 1750000550 | S.DIO | 1SS355 TE-17 | B | 67.2/24.9 |
| D557 | 1750000550 | S.DIO | 1SS355 TE-17 | B | 70.2/36.4 |
| D558 | 1750000550 | S.DIO | 1SS355 TE-17 | B | 114.3/27.1 |
| D559 | 1750000550 | S.DIO | 1SS355 TE-17 | B | 90.6/26.8 |
| D560 | 1750000550 | S.DIO | 1SS355 TE-17 | B | 90.6/30.3 |
| D561 | 1750000550 | S.DIO | 1SS355 TE-17 | B | 114.3/30.5 |
| D562 | 1750000550 | S.DIO | 1SS355 TE-17 | B | 138.2/27.1 |
| D563 | 1750000550 | S.DIO | 1SS355 TE-17 | B | 138.2/30.5 |
| D564 | 1750000550 | S.DIO | 1SS355 TE-17 | B | 162.1/27.1 |
| D565 | 1750000550 | S.DIO | 1SS355 TE-17 | B | 162.1/30.6 |
| D566 | 1750000550 | S.DIO | 1SS355 TE-17 | B | 182.5/33.5 |
| D567 | 1750000550 | S.DIO | 1SS355 TE-17 | B | 114.3/19.6 |
| D568 | 1750000550 | S.DIO | 1SS355 TE-17 | B | 90.7/19.6 |
| D569 | 1750000550 | S.DIO | 1SS355 TE-17 | B | 183.6/17.1 |
| D570 | 1750000550 | S.DIO | 1SS355 TE-17 | B | 162.1/19.7 |
| D571 | 1750000550 | S.DIO | 1SS355 TE-17 | B | 162.1/23.5 |
| D572 | 1750000550 | S.DIO | 1SS355 TE-17 | B | 138.2/23.5 |
| D573 | 1750000550 | S.DIO | 1SS355 TE-17 | B | 138.2/19.6 |
| D574 | 1750000550 | S.DIO | 1SS355 TE-17 | B | 114.3/23.4 |
| D575 | 1750000550 | S.DIO | 1SS355 TE-17 | B | 90.7/22.9 |
| D701 | 1710001240 | DIO | L204BBB | | |
| D702 | 1710001240 | DIO | L204BBB | | |
| D703 | 1750000550 | S.DIO | 1SS355 TE-17 | B | 47/9 |
| D704 | 1750000550 | S.DIO | 1SS355 TE-17 | B | 44.9/9 |
| D705 | 1750000550 | S.DIO | 1SS355 TE-17 | T | 51.8/34.3 |
| L1 | 6200003261 | S.COL | NLV32T-101J | B | 4.5/52 |
| L2 | 6200003950 | S.COL | HF50ACC 322513-T | B | 4.7/40 |
| L3 | 6200003261 | S.COL | NLV32T-101J | B | 4.5/48 |
| L4 | 6200003261 | S.COL | NLV32T-101J | B | 4.5/44 |
| L101 | 6140003980 | COL | LR-476 | | |
| L102 | 6140003990 | COL | LR-477 | | |
| L103 | 6140004001 | COL | LR-478A | | |
| L104 | 6140004010 | COL | LR-479 | | |
| L105 | 6140004020 | COL | LR-480 | | |
| L106 | 6140004030 | COL | LR-481 | | |
| L107 | 6110003930 | COL | LA-595 | | |
| L201 | 6180000920 | COL | LAL 03NA 221K | | |
| L203 | 6140003940 | COL | LR-493 | | |
| L503 | 6200003261 | S.COL | NLV32T-101J | B | 4.5/36 |
| L504 | 6200003261 | S.COL | NLV32T-101J | B | 4.5/32 |
| L601 | 6140003980 | COL | LR-476 | | |
| L602 | 6140003990 | COL | LR-477 | | |
| L603 | 6140004001 | COL | LR-478A | | |
| L604 | 6140004010 | COL | LR-479 | | |
| L605 | 6140004020 | COL | LR-480 | | |
| L606 | 6140004030 | COL | LR-481 | | |
| L607 | 6110003930 | COL | LA-595 | | |
| L701 | 6180000920 | COL | LAL 03NA 221K | | |
| L703 | 6140003940 | COL | LR-493 | | |
| R1 | 7030003680 | S.RES | ERJ3GEYJ 104 V (100 k) | B | 17.3/60.8 |
| R2 | 7030003560 | S.RES | ERJ3GEYJ 103 V (10 k) | B | 12.6/54.5 |

M.=Mounted side (T: Mounted on the Top side, B: Mounted on the Bottom side)
S.=Surface mount

## [DIGISEL UNIT]

| REF NO. | ORDER NO. | DESCRIPTION | M. | H/V LOCATION |
|---|---|---|---|---|
| R3 | 7030003560 | S.RES ERJ3GEYJ 103 V (10 k) | T | 26.1/51.6 |
| R4 | 7030003440 | S.RES ERJ3GEYJ 102 V (1 k) | T | 14.3/47.4 |
| R5 | 7030003440 | S.RES ERJ3GEYJ 102 V (1 k) | T | 15.7/44.8 |
| R6 | 7030003440 | S.RES ERJ3GEYJ 102 V (1 k) | T | 15.1/46.1 |
| R7 | 7030003440 | S.RES ERJ3GEYJ 102 V (1 k) | T | 4/52.9 |
| R8 | 7030003440 | S.RES ERJ3GEYJ 102 V (1 k) | T | 13.3/51.8 |
| R9 | 7030003360 | S.RES ERJ3GEYJ 221 V (220) | B | 32/45.9 |
| R10 | 7030003360 | S.RES ERJ3GEYJ 221 V (220) | T | 34.6/60 |
| R35 | 7030003360 | S.RES ERJ3GEYJ 221 V (220) | T | 27.9/62.4 |
| R36 | 7030003360 | S.RES ERJ3GEYJ 221 V (220) | T | 28.6/65.8 |
| R37 | 7030003360 | S.RES ERJ3GEYJ 221 V (220) | T | 29.3/62.4 |
| R38 | 7030003360 | S.RES ERJ3GEYJ 221 V (220) | T | 30/65.8 |
| R39 | 7030003360 | S.RES ERJ3GEYJ 221 V (220) | T | 30.7/62.4 |
| R40 | 7030003360 | S.RES ERJ3GEYJ 221 V (220) | T | 26.5/62.4 |
| R41 | 7030003360 | S.RES ERJ3GEYJ 221 V (220) | T | 27.2/65.8 |
| R42 | 7030003360 | S.RES ERJ3GEYJ 221 V (220) | T | 25.8/65.8 |
| R43 | 7030003360 | S.RES ERJ3GEYJ 221 V (220) | T | 25.1/62.4 |
| R44 | 7030003360 | S.RES ERJ3GEYJ 221 V (220) | T | 24.4/65.8 |
| R45 | 7030003360 | S.RES ERJ3GEYJ 221 V (220) | T | 23.7/62.4 |
| R46 | 7030003360 | S.RES ERJ3GEYJ 221 V (220) | T | 23/65.8 |
| R47 | 7030003360 | S.RES ERJ3GEYJ 221 V (220) | T | 21.2/62.4 |
| R48 | 7030003360 | S.RES ERJ3GEYJ 221 V (220) | T | 19.1/65.8 |
| R49 | 7030003360 | S.RES ERJ3GEYJ 221 V (220) | T | 18.4/62.4 |
| R50 | 7030003360 | S.RES ERJ3GEYJ 221 V (220) | T | 19.8/62.4 |
| R51 | 7030003360 | S.RES ERJ3GEYJ 221 V (220) | T | 20.5/65.8 |
| R52 | 7030003360 | S.RES ERJ3GEYJ 221 V (220) | T | 15.6/62.4 |
| R53 | 7030003360 | S.RES ERJ3GEYJ 221 V (220) | T | 14.9/65.8 |
| R54 | 7030003360 | S.RES ERJ3GEYJ 221 V (220) | T | 14.2/62.4 |
| R55 | 7030003360 | S.RES ERJ3GEYJ 221 V (220) | T | 16.3/65.8 |
| R56 | 7030003360 | S.RES ERJ3GEYJ 221 V (220) | T | 17/62.4 |
| R57 | 7030003360 | S.RES ERJ3GEYJ 221 V (220) | T | 17.7/65.8 |
| R58 | 7030003360 | S.RES ERJ3GEYJ 221 V (220) | T | 20.9/46.4 |
| R59 | 7030003440 | S.RES ERJ3GEYJ 102 V (1 k) | T | 14.9/49.7 |
| R100 | 7030000010 | S.RES MCR10EZHJ JPW (000) | B | 26/47.3 |
| R104 | 7030003560 | S.RES ERJ3GEYJ 103 V (10 k) | B | 145.1/64.1 |
| R105 | 7030003560 | S.RES ERJ3GEYJ 103 V (10 k) | B | 131.1/62.7 |
| R201 | 7030000380 | S.RES MCR10EZHJ 1 k | B | 49.4/55.6 |
| R202 | 7030000290 | S.RES MCR10EZHJ 180 (181) | B | 49.4/51.8 |
| R203 | 7030000220 | S.RES MCR10EZHJ 47 (470) | B | 49.4/53.7 |
| R204 | 7030003360 | S.RES ERJ3GEYJ 221 V (220) | B | 48.2/69.7 |
| R205 | 7030003350 | S.RES ERJ3GEYJ 181 V (180) | T | 54.5/46.5 |
| R206 | 7030003370 | S.RES ERJ3GEYJ 271 V (270) | B | 49.4/48.7 |
| R207 | 7030003560 | S.RES ERJ3GEYJ 103 V (10 k) | T | 57.6/48.7 |
| R208 | 7030000200 | S.RES MCR10EZHJ 33 (330) | B | 45.4/56.9 |
| R209 | 7030003240 | S.RES ERJ3GEYJ 220 V (22) | T | 44.2/53.9 |
| R210 | 7030003370 | S.RES ERJ3GEYJ 271 V (270) | B | 45.2/49.5 |
| R211 | 7030003370 | S.RES ERJ3GEYJ 271 V (270) | B | 45.2/50.8 |
| R213 | 7030000220 | S.RES MCR10EZHJ 47 (470) | B | 38.1/55.9 |
| R214 | 7030003460 | S.RES ERJ3GEYJ 152 V (1.5 k) | B | 51.6/60 |
| R215 | 7030003460 | S.RES ERJ3GEYJ 152 V (1.5 k) | B | 52.4/58 |
| R216 | 7030003680 | S.RES ERJ3GEYJ 104 V (100 k) | B | 17.3/66.4 |
| R501 | 7030003680 | S.RES ERJ3GEYJ 104 V (100 k) | B | 14.5/21.2 |
| R502 | 7030003560 | S.RES ERJ3GEYJ 103 V (10 k) | B | 25.7/25.3 |
| R503 | 7030003560 | S.RES ERJ3GEYJ 103 V (10 k) | B | 24.4/25.3 |
| R504 | 7030003440 | S.RES ERJ3GEYJ 102 V (1 k) | B | 9.7/44.5 |
| R505 | 7030003440 | S.RES ERJ3GEYJ 102 V (1 k) | T | 9.3/42.5 |
| R506 | 7030003440 | S.RES ERJ3GEYJ 102 V (1 k) | T | 3.7/28.1 |
| R507 | 7030003440 | S.RES ERJ3GEYJ 102 V (1 k) | B | 4.4/28 |
| R508 | 7030003440 | S.RES ERJ3GEYJ 102 V (1 k) | T | 12.9/30.8 |
| R509 | 7030003360 | S.RES ERJ3GEYJ 221 V (220) | T | 31.1/34.8 |
| R510 | 7030003360 | S.RES ERJ3GEYJ 221 V (220) | T | 32.2/21.9 |
| R535 | 7030003360 | S.RES ERJ3GEYJ 221 V (220) | T | 26.4/21.9 |
| R536 | 7030003360 | S.RES ERJ3GEYJ 221 V (220) | T | 25.7/19 |
| R537 | 7030003360 | S.RES ERJ3GEYJ 221 V (220) | T | 23.6/21.9 |
| R538 | 7030003360 | S.RES ERJ3GEYJ 221 V (220) | T | 24.3/19 |
| R539 | 7030003360 | S.RES ERJ3GEYJ 221 V (220) | T | 25/21.8 |
| R540 | 7030003360 | S.RES ERJ3GEYJ 221 V (220) | T | 30.1/19 |
| R541 | 7030003360 | S.RES ERJ3GEYJ 221 V (220) | T | 29.4/21.9 |
| R542 | 7030003360 | S.RES ERJ3GEYJ 221 V (220) | T | 28.7/19 |
| R543 | 7030003360 | S.RES ERJ3GEYJ 221 V (220) | T | 27.9/21.9 |
| R544 | 7030003360 | S.RES ERJ3GEYJ 221 V (220) | T | 27.2/19 |
| R545 | 7030003360 | S.RES ERJ3GEYJ 221 V (220) | T | 30.8/21.9 |
| R546 | 7030003360 | S.RES ERJ3GEYJ 221 V (220) | T | 31.5/19 |
| R547 | 7030003360 | S.RES ERJ3GEYJ 221 V (220) | T | 18/21.9 |
| R548 | 7030003360 | S.RES ERJ3GEYJ 221 V (220) | T | 17.3/19.1 |
| R549 | 7030003360 | S.RES ERJ3GEYJ 221 V (220) | T | 15.2/21.9 |
| R550 | 7030003360 | S.RES ERJ3GEYJ 221 V (220) | T | 16.6/21.9 |
| R551 | 7030003360 | S.RES ERJ3GEYJ 221 V (220) | T | 15.9/19.1 |
| R552 | 7030003360 | S.RES ERJ3GEYJ 221 V (220) | T | 20.1/19.2 |
| R553 | 7030003360 | S.RES ERJ3GEYJ 221 V (220) | T | 19.4/21.9 |
| R554 | 7030003360 | S.RES ERJ3GEYJ 221 V (220) | T | 18.7/19.1 |
| R555 | 7030003360 | S.RES ERJ3GEYJ 221 V (220) | T | 20.9/21.9 |
| R556 | 7030003360 | S.RES ERJ3GEYJ 221 V (220) | T | 21.6/19.2 |
| R557 | 7030003360 | S.RES ERJ3GEYJ 221 V (220) | T | 22.3/21.9 |
| R558 | 7030003360 | S.RES ERJ3GEYJ 221 V (220) | T | 23.5/34.2 |
| R600 | 7030000010 | S.RES MCR10EZHJ JPW (000) | B | 30.9/33.9 |
| R604 | 7030003560 | S.RES ERJ3GEYJ 103 V (10 k) | B | 145.1/17.1 |
| R605 | 7030003560 | S.RES ERJ3GEYJ 103 V (10 k) | B | 129.1/17.1 |
| R701 | 7030000380 | S.RES MCR10EZHJ 1 k | T | 53.2/20.4 |
| R702 | 7030000290 | S.RES MCR10EZHJ 180 (181) | T | 51.6/15.9 |
| R703 | 7030000220 | S.RES MCR10EZHJ 47 (470) | T | 51.6/13.8 |
| R704 | 7030003360 | S.RES ERJ3GEYJ 221 V (220) | T | 52.9/31.9 |
| R705 | 7030003350 | S.RES ERJ3GEYJ 181 V (180) | B | 49.4/9 |
| R706 | 7030003370 | S.RES ERJ3GEYJ 271 V (270) | B | 42.4/10.1 |
| R707 | 7030003560 | S.RES ERJ3GEYJ 103 V (10 k) | T | 51.3/12.2 |
| R708 | 7030000200 | S.RES MCR10EZHJ 33 (330) | T | 43.8/25.6 |
| R709 | 7030003240 | S.RES ERJ3GEYJ 220 V (22) | T | 46.5/19.8 |
| R710 | 7030003370 | S.RES ERJ3GEYJ 271 V (270) | B | 45.6/19.4 |
| R711 | 7030003370 | S.RES ERJ3GEYJ 271 V (270) | B | 45.6/21 |
| R713 | 7030000220 | S.RES MCR10EZHJ 47 (470) | B | 38.8/27.4 |
| R714 | 7030003460 | S.RES ERJ3GEYJ 152 V (1.5 k) | T | 53.5/29.2 |
| R715 | 7030003460 | S.RES ERJ3GEYJ 152 V (1.5 k) | T | 51.6/30 |
| R716 | 7030003680 | S.RES ERJ3GEYJ 104 V (100 k) | B | 14.5/15.5 |

## [DIGISEL UNIT]

| REF NO. | ORDER NO. | DESCRIPTION | M. | H/V LOCATION |
|---|---|---|---|---|
| C1 | 4030011600 | S.CER C1608 JB 1E 104K-T | B | 15.2/55.4 |
| C2 | 4030011600 | S.CER C1608 JB 1E 104K-T | T | 7.9/31.8 |
| C4 | 4030011600 | S.CER C1608 JB 1E 104K-T | T | 31.8/50.7 |
| C5 | 4030011600 | S.CER C1608 JB 1E 104K-T | T | 16/51.6 |
| C21 | 4030006880 | S.CER C1608 JB 1H 472K-T | B | 30.4/45.9 |
| C35 | 4030006880 | S.CER C1608 JB 1H 472K-T | T | 32.1/65.3 |
| C51 | 4030006880 | S.CER C1608 JB 1H 472K-T | B | 64.8/57.2 |
| C52 | 4030006880 | S.CER C1608 JB 1H 472K-T | T | 57.6/45.8 |
| C53 | 4030006880 | S.CER C1608 JB 1H 472K-T | T | 51.5/59.2 |
| C54 | 4030006880 | S.CER C1608 JB 1H 472K-T | T | 87.3/72.3 |
| C55 | 4030006880 | S.CER C1608 JB 1H 472K-T | B | 67.1/63.5 |
| C56 | 4030006880 | S.CER C1608 JB 1H 472K-T | T | 66.5/54.9 |
| C57 | 4030006880 | S.CER C1608 JB 1H 472K-T | B | 66.2/45.6 |
| C58 | 4030006880 | S.CER C1608 JB 1H 472K-T | T | 114.3/50.4 |
| C59 | 4030006880 | S.CER C1608 JB 1H 472K-T | T | 90.4/51.4 |
| C60 | 4030006880 | S.CER C1608 JB 1H 472K-T | T | 90.4/54.4 |
| C61 | 4030006880 | S.CER C1608 JB 1H 472K-T | T | 114.3/53.7 |
| C62 | 4030006880 | S.CER C1608 JB 1H 472K-T | T | 138.2/51.1 |
| C63 | 4030006880 | S.CER C1608 JB 1H 472K-T | T | 138.2/54.4 |
| C64 | 4030006880 | S.CER C1608 JB 1H 472K-T | T | 162.1/50.8 |
| C65 | 4030006880 | S.CER C1608 JB 1H 472K-T | T | 162.1/53.9 |
| C66 | 4030006880 | S.CER C1608 JB 1H 472K-T | B | 182.5/47.7 |
| C67 | 4030006880 | S.CER C1608 JB 1H 472K-T | T | 114.3/57.2 |
| C68 | 4030006880 | S.CER C1608 JB 1H 472K-T | T | 88.3/63 |
| C69 | 4030006880 | S.CER C1608 JB 1H 472K-T | B | 183.7/64.8 |
| C70 | 4030006880 | S.CER C1608 JB 1H 472K-T | T | 162.1/60.2 |
| C71 | 4030006880 | S.CER C1608 JB 1H 472K-T | T | 162.1/57.3 |
| C72 | 4030006880 | S.CER C1608 JB 1H 472K-T | T | 138.2/59.5 |
| C73 | 4030006880 | S.CER C1608 JB 1H 472K-T | T | 135.8/63 |
| C74 | 4030006880 | S.CER C1608 JB 1H 472K-T | T | 114.3/60.4 |
| C75 | 4030006880 | S.CER C1608 JB 1H 472K-T | T | 90.5/59.6 |
| C101 | 4030011340 | S.CER C1608 CH 1H 471J-T | T | 68.2/68.4 |
| C102 | 4030011280 | S.CER C1608 CH 1H 271J-T | T | 59.5/69.2 |
| C103 | 4030011280 | S.CER C1608 CH 1H 271J-T | T | 60.5/56.7 |
| C104 | 4030007130 | S.CER C1608 CH 1H 101J-T | T | 57.7/52.7 |
| C105 | 4030006940 | S.CER C1608 CH 1H 030C-T | B | 65.7/51.9 |
| C106 | 4030007150 | S.CER C1608 CH 1H 151J-T | B | 56.4/70.2 |
| C107 | 4030007150 | S.CER C1608 CH 1H 151J-T | B | 60.3/70.6 |
| C108 | 4030007150 | S.CER C1608 CH 1H 151J-T | B | 62.4/70.6 |
| C109 | 4030007150 | S.CER C1608 CH 1H 151J-T | B | 56.4/68.8 |
| C110 | 4030009520 | S.CER C1608 CH 1H 020B-T | T | 77.2/69.1 |
| C111 | 4030009550 | S.CER C1608 CH 1H 2R5B-T | T | 77.2/67.8 |
| C113 | 4030007000 | S.CER C1608 CH 1H 090D-T | T | 73.7/58.9 |
| C114 | 4030007040 | S.CER C1608 CH 1H 180J-T | T | 71.7/59.5 |
| C115 | 4030007040 | S.CER C1608 CH 1H 180J-T | T | 70.4/59.5 |
| C116 | 4030007040 | S.CER C1608 CH 1H 180J-T | T | 69.1/59.5 |
| C117 | 4030007070 | S.CER C1608 CH 1H 330J-T | T | 77.2/70.4 |
| C118 | 4030007090 | S.CER C1608 CH 1H 470J-T | B | 76.7/59.8 |
| C119 | 4030007040 | S.CER C1608 CH 1H 180J-T | B | 66.1/48.1 |
| C120 | 4030007040 | S.CER C1608 CH 1H 180J-T | B | 66.1/49.8 |
| C121 | 4030007040 | S.CER C1608 CH 1H 180J-T | B | 74.4/59.7 |
| C122 | 4030007000 | S.CER C1608 CH 1H 090D-T | B | 74.3/70.3 |
| C124 | 4030009520 | S.CER C1608 CH 1H 020B-T | B | 77.4/68.9 |
| C125 | 4030009550 | S.CER C1608 CH 1H 2R5B-T | B | 76.1/68.9 |
| C126 | 4030008360 | S.CER C1608 UJ 1H 101J-T | B | 124.5/63.3 |
| C128 | 4030009500 | S.CER C1608 CH 1H 0R5B-T | B | 107.2/55.4 |
| C129 | 4030009510 | S.CER C1608 CH 1H 010B-T | B | 83.2/55.8 |
| C130 | 4030009520 | S.CER C1608 CH 1H 020B-T | B | 97.6/55.5 |
| C131 | 4030009910 | S.CER C1608 CH 1H 040B-T | B | 121.5/55.6 |
| C132 | 4030006990 | S.CER C1608 CH 1H 080D-T | B | 131/55.6 |
| C133 | 4030007040 | S.CER C1608 CH 1H 180J-T | B | 145.4/55.7 |
| C134 | 4030008750 | S.CER C1608 CH 1H 360J-T | B | 154.9/55.7 |
| C135 | 4030007110 | S.CER C1608 CH 1H 680J-T | B | 169.3/55.7 |
| C136 | 4030007140 | S.CER C1608 CH 1H 121J-T | B | 178.8/55.7 |
| C137 | 4030007140 | S.CER C1608 CH 1H 121J-T | B | 107.4/63.8 |
| C138 | 4030007130 | S.CER C1608 CH 1H 101J-T | B | 107.4/62.5 |
| C139 | 4030007160 | S.CER C1608 CH 1H 181J-T | B | 83.6/62.7 |
| C140 | 4030007160 | S.CER C1608 CH 1H 181J-T | B | 83.6/64.5 |
| C141 | 4030008330 | S.CER C1608 UJ 1H 560J-T | B | 177.2/63.2 |
| C142 | 4030008330 | S.CER C1608 UJ 1H 560J-T | B | 169.3/63.2 |
| C143 | 4030007090 | S.CER C1608 CH 1H 470J-T | B | 155.2/63.2 |
| C201 | 4030011600 | S.CER C1608 JB 1E 104K-T | B | 49.1/57.2 |
| C202 | 4030006900 | S.CER C1608 JB 1H 103K-T | T | 57.7/55.4 |
| C203 | 4030011600 | S.CER C1608 JB 1E 104K-T | B | 50.4/46.3 |
| C204 | 4030011600 | S.CER C1608 JB 1E 104K-T | B | 53.2/45.4 |
| C205 | 4030011600 | S.CER C1608 JB 1E 104K-T | B | 43.4/59.6 |
| C206 | 4030011600 | S.CER C1608 JB 1E 104K-T | B | 44.4/54.6 |
| C207 | 4030006880 | S.CER C1608 JB 1H 472K-T | B | 41.1/59.6 |
| C208 | 4030007010 | S.CER C1608 CH 1H 100D-T | T | 45/56.1 |
| C209 | 4030006880 | S.CER C1608 JB 1H 472K-T | B | 38.1/59.6 |
| C210 | 4030006900 | S.CER C1608 JB 1H 103K-T | B | 45.2/52.1 |
| C211 | 4030009000 | S.CER C2012 JB 1C 224K-T | B | 45.6/47.9 |
| C212 | 4030006880 | S.CER C1608 JB 1H 472K-T | B | 52.4/62 |
| C213 | 4030006880 | S.CER C1608 JB 1H 472K-T | T | 54.5/45.1 |
| C214 | 4030006880 | S.CER C1608 JB 1H 472K-T | B | 48.5/46.3 |
| C215 | 4030006880 | S.CER C1608 JB 1H 472K-T | T | 43.8/68.4 |
| C501 | 4030011600 | S.CER C1608 JB 1E 104K-T | B | 27/25.3 |
| C504 | 4030011600 | S.CER C1608 JB 1E 104K-T | T | 30.8/33.4 |
| C505 | 4030011600 | S.CER C1608 JB 1E 104K-T | T | 19.5/33.7 |
| C521 | 4030006880 | S.CER C1608 JB 1H 472K-T | B | 28/35 |
| C535 | 4030006880 | S.CER C1608 JB 1H 472K-T | T | 33.5/21.9 |
| C551 | 4030006880 | S.CER C1608 JB 1H 472K-T | B | 63.6/10.9 |
| C552 | 4030006880 | S.CER C1608 JB 1H 472K-T | T | 61.5/22.9 |
| C553 | 4030006880 | S.CER C1608 JB 1H 472K-T | B | 58/10.2 |
| C554 | 4030006880 | S.CER C1608 JB 1H 472K-T | T | 90.3/12.9 |
| C555 | 4030006880 | S.CER C1608 JB 1H 472K-T | B | 68.8/12.6 |
| C556 | 4030006880 | S.CER C1608 JB 1H 472K-T | B | 69.8/27.9 |
| C557 | 4030006880 | S.CER C1608 JB 1H 472K-T | B | 67.4/32.9 |
| C558 | 4030006880 | S.CER C1608 JB 1H 472K-T | T | 114.3/25.9 |
| C559 | 4030006880 | S.CER C1608 JB 1H 472K-T | T | 90.4/27.1 |
| C560 | 4030006880 | S.CER C1608 JB 1H 472K-T | T | 90.4/30.5 |
| C561 | 4030006880 | S.CER C1608 JB 1H 472K-T | T | 114.3/29.9 |
| C562 | 4030006880 | S.CER C1608 JB 1H 472K-T | T | 138.2/27.1 |
| C563 | 4030006880 | S.CER C1608 JB 1H 472K-T | T | 138.2/30.5 |

M.=Mounted side (T: Mounted on the Top side, B: Mounted on the Bottom side)
S.=Surface mount

## [DIGISEL UNIT]

| REF NO. | ORDER NO. | DESCRIPTION | M. | H/V LOCATION |
|---|---|---|---|---|
| C564 | 4030006880 | S.CER C1608 JB 1H 472K-T | T | 162.1/27.2 |
| C565 | 4030006880 | S.CER C1608 JB 1H 472K-T | T | 162.1/30.4 |
| C566 | 4030006880 | S.CER C1608 JB 1H 472K-T | B | 180.9/33.5 |
| C567 | 4030006880 | S.CER C1608 JB 1H 472K-T | T | 109.8/17.8 |
| C568 | 4030006880 | S.CER C1608 JB 1H 472K-T | T | 90.4/19.5 |
| C569 | 4030006880 | S.CER C1608 JB 1H 472K-T | B | 181.8/17.1 |
| C570 | 4030006880 | S.CER C1608 JB 1H 472K-T | T | 162.1/22.4 |
| C571 | 4030006880 | S.CER C1608 JB 1H 472K-T | T | 158.5/17.6 |
| C572 | 4030006880 | S.CER C1608 JB 1H 472K-T | T | 138.2/23.1 |
| C573 | 4030006880 | S.CER C1608 JB 1H 472K-T | T | 134.8/17.5 |
| C574 | 4030006880 | S.CER C1608 JB 1H 472K-T | T | 114.3/20.6 |
| C575 | 4030006880 | S.CER C1608 JB 1H 472K-T | T | 90.4/23.3 |
| C601 | 4030011340 | S.CER C1608 CH 1H 471J-T | B | 66/22.5 |
| C602 | 4030011280 | S.CER C1608 CH 1H 271J-T | B | 65.2/26.7 |
| C603 | 4030011280 | S.CER C1608 CH 1H 271J-T | T | 59.1/35.6 |
| C604 | 4030007130 | S.CER C1608 CH 1H 101J-T | T | 57.7/33 |
| C605 | 4030006940 | S.CER C1608 CH 1H 030C-T | T | 57.2/29 |
| C606 | 4030007150 | S.CER C1608 CH 1H 151J-T | T | 55.6/30.7 |
| C607 | 4030007150 | S.CER C1608 CH 1H 151J-T | T | 57.2/25.4 |
| C608 | 4030007150 | S.CER C1608 CH 1H 151J-T | T | 57.2/23.8 |
| C609 | 4030007150 | S.CER C1608 CH 1H 151J-T | T | 56.8/22.5 |
| C610 | 4030009520 | S.CER C1608 CH 1H 020B-T | B | 77.3/11.3 |
| C611 | 4030009550 | S.CER C1608 CH 1H 2R5B-T | B | 76/11.3 |
| C613 | 4030007000 | S.CER C1608 CH 1H 090D-T | B | 73.8/12.5 |
| C614 | 4030007040 | S.CER C1608 CH 1H 180J-T | B | 73.7/21.1 |
| C615 | 4030007040 | S.CER C1608 CH 1H 180J-T | B | 73.9/28.2 |
| C616 | 4030007040 | S.CER C1608 CH 1H 180J-T | B | 73.9/29.7 |
| C617 | 4030007070 | S.CER C1608 CH 1H 330J-T | B | 76/19.4 |
| C618 | 4030007090 | S.CER C1608 CH 1H 470J-T | T | 75.5/20.7 |
| C619 | 4030007040 | S.CER C1608 CH 1H 180J-T | T | 65.6/35.3 |
| C620 | 4030007040 | S.CER C1608 CH 1H 180J-T | T | 65.7/36.7 |
| C621 | 4030007040 | S.CER C1608 CH 1H 180J-T | T | 73.7/28.3 |
| C622 | 4030007000 | S.CER C1608 CH 1H 090D-T | T | 73.2/20.2 |
| C624 | 4030009520 | S.CER C1608 CH 1H 020B-T | T | 76.9/10.6 |
| C625 | 4030009550 | S.CER C1608 CH 1H 2R5B-T | T | 76.9/12 |
| C626 | 4030008360 | S.CER C1608 UJ 1H 101J-T | B | 124.5/17.4 |
| C628 | 4030009500 | S.CER C1608 CH 1H 0R5B-T | B | 107.4/25.3 |
| C629 | 4030009510 | S.CER C1608 CH 1H 010B-T | B | 83.3/25.5 |
| C630 | 4030009520 | S.CER C1608 CH 1H 020B-T | B | 97.8/25.3 |
| C631 | 4030009910 | S.CER C1608 CH 1H 040B-T | B | 121.2/25.3 |
| C632 | 4030006990 | S.CER C1608 CH 1H 080D-T | B | 131.3/25.3 |
| C633 | 4030007040 | S.CER C1608 CH 1H 180J-T | B | 145.2/25.3 |
| C634 | 4030008750 | S.CER C1608 CH 1H 360J-T | B | 155.2/25.3 |
| C635 | 4030007110 | S.CER C1608 CH 1H 680J-T | B | 169/25.3 |
| C636 | 4030007140 | S.CER C1608 CH 1H 121J-T | B | 179.1/25.3 |
| C637 | 4030007140 | S.CER C1608 CH 1H 121J-T | B | 107.4/18.3 |
| C638 | 4030007130 | S.CER C1608 CH 1H 101J-T | B | 107.4/16.5 |
| C639 | 4030007160 | S.CER C1608 CH 1H 181J-T | B | 83.9/18.1 |
| C640 | 4030007160 | S.CER C1608 CH 1H 181J-T | B | 84.7/16.3 |
| C641 | 4030008330 | S.CER C1608 UJ 1H 560J-T | B | 177/17.9 |
| C642 | 4030008330 | S.CER C1608 UJ 1H 560J-T | B | 169/18 |
| C643 | 4030007090 | S.CER C1608 CH 1H 470J-T | B | 155.5/18 |
| C701 | 4030011600 | S.CER C1608 JB 1E 104K-T | T | 52.3/17.7 |
| C702 | 4030006900 | S.CER C1608 JB 1H 103K-T | T | 54.6/27.3 |
| C703 | 4030011600 | S.CER C1608 JB 1E 104K-T | B | 40.3/10.4 |
| C704 | 4030011600 | S.CER C1608 JB 1E 104K-T | B | 52.1/9.8 |
| C705 | 4030011600 | S.CER C1608 JB 1E 104K-T | B | 44/28.1 |
| C706 | 4030011600 | S.CER C1608 JB 1E 104K-T | T | 45.1/22.6 |
| C707 | 4030006880 | S.CER C1608 JB 1H 472K-T | B | 42.7/28.1 |
| C708 | 4030007010 | S.CER C1608 CH 1H 100D-T | T | 46.5/22.7 |
| C709 | 4030006880 | S.CER C1608 JB 1H 472K-T | B | 40.6/28.9 |
| C710 | 4030006900 | S.CER C1608 JB 1H 103K-T | B | 45.6/22.7 |
| C711 | 4030009000 | S.CER C2012 JB 1C 224K-T | B | 45.7/24.4 |
| C712 | 4030006880 | S.CER C1608 JB 1H 472K-T | T | 54.8/32.3 |
| C713 | 4030006880 | S.CER C1608 JB 1H 472K-T | B | 52.1/7.9 |
| C714 | 4030006880 | S.CER C1608 JB 1H 472K-T | B | 42.4/6.5 |
| C715 | 4030006880 | S.CER C1608 JB 1H 472K-T | T | 54.2/34.3 |
| | | | | |
| RL2 | 6330001750 | RLY FTR-B4CA012Z | | |
| RL21 | 6330001750 | RLY FTR-B4CA012Z | | |
| RL51 | 6330001750 | RLY FTR-B4CA012Z | | |
| RL52 | 6330001750 | RLY FTR-B4CA012Z | | |
| RL53 | 6330001750 | RLY FTR-B4CA012Z | | |
| RL54 | 6330001750 | RLY FTR-B4CA012Z | | |
| RL55 | 6330001750 | RLY FTR-B4CA012Z | | |
| RL56 | 6330001750 | RLY FTR-B4CA012Z | | |
| RL57 | 6330001750 | RLY FTR-B4CA012Z | | |
| RL58 | 6330001750 | RLY FTR-B4CA012Z | | |
| RL59 | 6330001750 | RLY FTR-B4CA012Z | | |
| RL60 | 6330001750 | RLY FTR-B4CA012Z | | |
| RL61 | 6330001750 | RLY FTR-B4CA012Z | | |
| RL62 | 6330001750 | RLY FTR-B4CA012Z | | |
| RL63 | 6330001750 | RLY FTR-B4CA012Z | | |
| RL64 | 6330001750 | RLY FTR-B4CA012Z | | |
| RL65 | 6330001750 | RLY FTR-B4CA012Z | | |
| RL66 | 6330001750 | RLY FTR-B4CA012Z | | |
| RL67 | 6330001750 | RLY FTR-B4CA012Z | | |
| RL69 | 6330001750 | RLY FTR-B4CA012Z | | |
| RL70 | 6330001750 | RLY FTR-B4CA012Z | | |
| RL71 | 6330001750 | RLY FTR-B4CA012Z | | |
| RL72 | 6330001750 | RLY FTR-B4CA012Z | | |
| RL73 | 6330001750 | RLY FTR-B4CA012Z | | |
| RL74 | 6330001750 | RLY FTR-B4CA012Z | | |
| RL75 | 6330001750 | RLY FTR-B4CA012Z | | |
| RL76 | 6330001750 | RLY FTR-B4CA012Z | | |
| RL201 | 6330001750 | RLY FTR-B4CA012Z | | |
| RL502 | 6330001750 | RLY FTR-B4CA012Z | | |
| RL521 | 6330001750 | RLY FTR-B4CA012Z | | |
| RL551 | 6330001750 | RLY FTR-B4CA012Z | | |
| RL552 | 6330001750 | RLY FTR-B4CA012Z | | |
| RL553 | 6330001750 | RLY FTR-B4CA012Z | | |
| RL554 | 6330001750 | RLY FTR-B4CA012Z | | |
| RL555 | 6330001750 | RLY FTR-B4CA012Z | | |

## [DIGISEL UNIT]

| REF NO. | ORDER NO. | DESCRIPTION | M. | H/V LOCATION |
|---|---|---|---|---|
| RL556 | 6330001750 | RLY FTR-B4CA012Z | | |
| RL557 | 6330001750 | RLY FTR-B4CA012Z | | |
| RL558 | 6330001750 | RLY FTR-B4CA012Z | | |
| RL559 | 6330001750 | RLY FTR-B4CA012Z | | |
| RL560 | 6330001750 | RLY FTR-B4CA012Z | | |
| RL561 | 6330001750 | RLY FTR-B4CA012Z | | |
| RL562 | 6330001750 | RLY FTR-B4CA012Z | | |
| RL563 | 6330001750 | RLY FTR-B4CA012Z | | |
| RL564 | 6330001750 | RLY FTR-B4CA012Z | | |
| RL565 | 6330001750 | RLY FTR-B4CA012Z | | |
| RL566 | 6330001750 | RLY FTR-B4CA012Z | | |
| RL567 | 6330001750 | RLY FTR-B4CA012Z | | |
| RL569 | 6330001750 | RLY FTR-B4CA012Z | | |
| RL570 | 6330001750 | RLY FTR-B4CA012Z | | |
| RL571 | 6330001750 | RLY FTR-B4CA012Z | | |
| RL572 | 6330001750 | RLY FTR-B4CA012Z | | |
| RL573 | 6330001750 | RLY FTR-B4CA012Z | | |
| RL574 | 6330001750 | RLY FTR-B4CA012Z | | |
| RL575 | 6330001750 | RLY FTR-B4CA012Z | | |
| RL576 | 6330001750 | RLY FTR-B4CA012Z | | |
| RL701 | 6330001750 | RLY FTR-B4CA012Z | | |
| | | | | |
| J1 | 6510007020 | CNR TMP-J01X-V6 | | |
| J2 | 6510007020 | CNR TMP-J01X-V6 | | |
| J10 | 6510020081 | S.CNR 52808-2071 (2090) | T | 4.5/40.5 |
| J501 | 6510007020 | CNR TMP-J01X-V6 | | |
| J502 | 6510007020 | CNR TMP-J01X-V6 | | |
| Q300 | 1520000561 | S.TR 2SB1123 T-TD-E | T | 205.7/10.5 |

M.=Mounted side (T: Mounted on the Top side, B: Mounted on the Bottom side)
S.=Surface mount

## [NETWORK UNIT]

| REF NO. | ORDER NO. | DESCRIPTION | | M. | H/V LOCATION |
|---|---|---|---|---|---|
| Q301 | 1590000680 | S.TR | DTC114EUA T106 | T | 201.4/9.1 |
| | | | | | |
| L50 | 6110003950 | COL | LA-598 | | |
| L60 | 6110003910 | COL | LA-593 | | |
| L70 | 6110003050 | COL | LA-492 | | |
| L80 | 6110003050 | COL | LA-492 | | |
| L90 | 6110003060 | COL | LA-493 | | |
| L100 | 6110003070 | COL | LA-494 | | |
| L110 | 6110003920 | COL | LA-594 | | |
| L120 | 6140004460 | COL | LR-504 | | |
| L130 | 6140004470 | COL | LR-505 | | |
| L131 | 6140004470 | COL | LR-505 | | |
| L300 | 6180000990 | COL | LAL 04NA 101K | | |
| | | | | | |
| R300 | 7030000420 | S.RES | MCR10EZHJ 2.2 k | T | 202.8/6.9 |
| R301 | 7030000420 | S.RES | MCR10EZHJ 2.2 k | T | 201.5/11.3 |
| R302 | 7030000420 | S.RES | MCR10EZHJ 2.2 k | T | 206.2/6.9 |
| R303 | 7030009800 | S.RES | ERJ12YJ121U (120) | T | 209.7/5 |
| | | | | | |
| C1 | 4620000150 | VAR | KB-150-07 150P | | |
| C2 | 4620000150 | VAR | KB-150-07 150P | | |
| C3 | 4010007580 | CER | HT20SJ SL 201J 3KV | | |
| C4 | 4010007580 | CER | HT20SJ SL 201J 3KV | | |
| C5 | 4010007580 | CER | HT20SJ SL 201J 3KV | | |
| C6 | 4010007580 | CER | HT20SJ SL 201J 3KV | | |
| C7 | 4010007580 | CER | HT20SJ SL 201J 3KV | | |
| C8 | 4010007580 | CER | HT20SJ SL 201J 3KV | | |
| C9 | 4010007580 | CER | HT20SJ SL 201J 3KV | | |
| C10 | 4010007580 | CER | HT20SJ SL 201J 3KV | | |
| C20 | 4010007570 | CER | HT15SJ SL 151J 3KV | | |
| C21 | 4010007570 | CER | HT15SJ SL 151J 3KV | | |
| C22 | 4010007570 | CER | HT15SJ SL 151J 3KV | | |
| C23 | 4010007570 | CER | HT15SJ SL 151J 3KV | | |
| C24 | 4010007570 | CER | HT15SJ SL 151J 3KV | | |
| C25 | 4010007570 | CER | HT15SJ SL 151J 3KV | | |
| C26 | 4010007570 | CER | HT15SJ SL 151J 3KV | | |
| C27 | 4010007570 | CER | HT15SJ SL 151J 3KV | | |
| C30 | 4010007550 | CER | HT11SJ SL 820J 3KV | | |
| C31 | 4010007550 | CER | HT11SJ SL 820J 3KV | | |
| C32 | 4010007550 | CER | HT11SJ SL 820J 3KV | | |
| C33 | 4010007550 | CER | HT11SJ SL 820J 3KV | | |
| C34 | 4010007550 | CER | HT11SJ SL 820J 3KV | | |
| C35 | 4010007550 | CER | HT11SJ SL 820J 3KV | | |
| C36 | 4010007550 | CER | HT11SJ SL 820J 3KV | | |
| C37 | 4010007550 | CER | HT11SJ SL 820J 3KV | | |
| C40 | 4010008550 | CER | DEA1X3F390JC3B | | |
| C41 | 4010008550 | CER | DEA1X3F390JC3B | | |
| C42 | 4010008550 | CER | DEA1X3F390JC3B | | |
| C43 | 4010008550 | CER | DEA1X3F390JC3B | | |
| C44 | 4010008550 | CER | DEA1X3F390JC3B | | |
| C45 | 4010008550 | CER | DEA1X3F390JC3B | | |
| C46 | 4010008550 | CER | DEA1X3F390JC3B | | |
| C47 | 4010008550 | CER | DEA1X3F390JC3B | | |
| C50 | 4030006880 | S.CER | C1608 JB 1H 472K-T | T | 140.7/12 |
| C60 | 4030006880 | S.CER | C1608 JB 1H 472K-T | T | 154.1/12 |
| C70 | 4030006880 | S.CER | C1608 JB 1H 472K-T | T | 167.5/16.1 |
| C80 | 4030006880 | S.CER | C1608 JB 1H 472K-T | T | 181.9/21.5 |
| C90 | 4030006880 | S.CER | C1608 JB 1H 472K-T | T | 195.3/21.3 |
| C100 | 4030006880 | S.CER | C1608 JB 1H 472K-T | T | 204.4/20.7 |
| C110 | 4030006880 | S.CER | C1608 JB 1H 472K-T | T | 205.8/20.7 |
| C120 | 4030006880 | S.CER | C1608 JB 1H 472K-T | T | 207.2/20.6 |
| C202 | 4030006880 | S.CER | C1608 JB 1H 472K-T | T | 187.4/13.2 |
| C203 | 4030006880 | S.CER | C1608 JB 1H 472K-T | T | 188.4/15.7 |
| C204 | 4030006880 | S.CER | C1608 JB 1H 472K-T | T | 189.4/13.2 |
| C205 | 4030006880 | S.CER | C1608 JB 1H 472K-T | T | 190.4/15.7 |
| C206 | 4030006880 | S.CER | C1608 JB 1H 472K-T | T | 191.4/13.2 |
| C207 | 4030006880 | S.CER | C1608 JB 1H 472K-T | T | 192.4/15.7 |
| C208 | 4030006880 | S.CER | C1608 JB 1H 472K-T | T | 193.4/13.2 |
| C209 | 4030006880 | S.CER | C1608 JB 1H 472K-T | T | 194.4/15.7 |
| C252 | 4030006880 | S.CER | C1608 JB 1H 472K-T | T | 175.4/13.2 |
| C253 | 4030006880 | S.CER | C1608 JB 1H 472K-T | T | 176.4/15.7 |
| C254 | 4030006880 | S.CER | C1608 JB 1H 472K-T | T | 177.4/13.2 |
| C255 | 4030006880 | S.CER | C1608 JB 1H 472K-T | T | 178.4/15.7 |
| C256 | 4030006880 | S.CER | C1608 JB 1H 472K-T | T | 179.4/13.2 |
| C257 | 4030006880 | S.CER | C1608 JB 1H 472K-T | T | 180.4/15.7 |
| C258 | 4030006880 | S.CER | C1608 JB 1H 472K-T | T | 181.4/13.2 |
| C259 | 4030006880 | S.CER | C1608 JB 1H 472K-T | T | 182.4/15.7 |
| C300 | 4030006880 | S.CER | C1608 JB 1H 472K-T | T | 184.4/13.2 |
| C301 | 4030006880 | S.CER | C1608 JB 1H 472K-T | T | 210.5/10.1 |
| | | | | | |
| RL10 | 6330001200 | RLY | VS-12MBU-UC | | |
| RL11 | 6330001200 | RLY | VS-12MBU-UC | | |
| RL20 | 6330001200 | RLY | VS-12MBU-UC | | |
| RL21 | 6330001200 | RLY | VS-12MBU-UC | | |
| RL30 | 6330001200 | RLY | VS-12MBU-UC | | |
| RL31 | 6330001200 | RLY | VS-12MBU-UC | | |
| RL40 | 6330001200 | RLY | VS-12MBU-UC | | |
| RL41 | 6330001200 | RLY | VS-12MBU-UC | | |
| RL50 | 6330001460 | RLY | FTR-F1CA012V | | |
| RL60 | 6330001200 | RLY | VS-12MBU-UC | | |
| RL70 | 6330001200 | RLY | VS-12MBU-UC | | |
| RL80 | 6330001200 | RLY | VS-12MBU-UC | | |
| RL90 | 6330001200 | RLY | VS-12MBU-UC | | |
| RL100 | 6330001200 | RLY | VS-12MBU-UC | | |
| RL110 | 6330001200 | RLY | VS-12MBU-UC | | |
| RL120 | 6330001200 | RLY | VS-12MBU-UC | | |
| | | | | | |
| J1 | 6510021561 | S.CNR | 52808-2470 (2490) | T | 184.9/7.4 |
| J2 | 6510017930 | CNR | 1771P145-20 | | |
| J3 | 6510017930 | CNR | 1771P145-20 | | |
| J4 | 6510003521 | CNR | S04B-EH-S (LF) (SN) | | |
| | | | | | |
| | | | | | |
| D402 | 1750000271 | S.DIO | 1SS301 (TE85L,F) | T | 11.8/24.3 |

## [FILTER UNIT]

| REF NO. | ORDER NO. | DESCRIPTION | | M. | H/V LOCATION |
|---|---|---|---|---|---|
| D452 | 1750000271 | S.DIO | 1SS301 (TE85L,F) | T | 32/20.5 |
| D502 | 1750000271 | S.DIO | 1SS301 (TE85L,F) | T | 54.8/30.3 |
| D552 | 1750000271 | S.DIO | 1SS301 (TE85L,F) | T | 155.6/29.1 |
| D602 | 1750000271 | S.DIO | 1SS301 (TE85L,F) | T | 130.1/20.3 |
| D652 | 1750000271 | S.DIO | 1SS301 (TE85L,F) | T | 93.8/33 |
| D702 | 1750000271 | S.DIO | 1SS301 (TE85L,F) | T | 69.6/20.3 |
| D752 | 1750000271 | S.DIO | 1SS301 (TE85L,F) | T | 113.1/33 |
| D802 | 1750000271 | S.DIO | 1SS301 (TE85L,F) | T | 173.6/25.9 |
| | | | | | |
| L401 | 6200005131 | S.COL | NLC453232T-101K-PF | T | 25.4/136.7 |
| L402 | 6140004310 | COL | LR-471 | | |
| L403 | 6140004300 | COL | LR-470 | | |
| L404 | 6140004300 | COL | LR-470 | | |
| L405 | 6200005131 | S.COL | NLC453232T-101K-PF | T | 7.3/24.6 |
| L451 | 6200005131 | S.COL | NLC453232T-101K-PF | T | 4.4/143.9 |
| L452 | 6140004270 | COL | LR-467 | | |
| L453 | 6140004290 | COL | LR-469 | | |
| L454 | 6140004290 | COL | LR-469 | | |
| L455 | 6200005131 | S.COL | NLC453232T-101K-PF | T | 28.4/29.9 |
| L501 | 6200005131 | S.COL | NLC453232T-101K-PF | T | 46.3/133.8 |
| L502 | 6140004280 | COL | LR-468 | | |
| L503 | 6140004270 | COL | LR-467 | | |
| L504 | 6140004270 | COL | LR-467 | | |
| L505 | 6200005131 | S.COL | NLC453232T-101K-PF | T | 50.2/29.6 |
| L551 | 6200005131 | S.COL | NLC453232T-101K-PF | T | 150.7/133.8 |
| L552 | 6140004260 | COL | LR-466 | | |
| L553 | 6140004280 | COL | LR-468 | | |
| L554 | 6140004280 | COL | LR-468 | | |
| L555 | 6200005131 | S.COL | NLC453232T-101K-PF | T | 151/29.7 |
| L601 | 6200005131 | S.COL | NLC453232T-101K-PF | T | 129.9/133.8 |
| L602 | 6140004250 | COL | LR-465 | | |
| L603 | 6140004240 | COL | LR-464 | | |
| L604 | 6140004240 | COL | LR-464 | | |
| L605 | 6200005131 | S.COL | NLC453232T-101K-PF | T | 130.1/14.2 |
| L651 | 6200005131 | S.COL | NLC453232T-101K-PF | T | 88.2/133.8 |
| L652 | 6140004200 | COL | LR-463 | | |
| L653 | 6140004170 | COL | LR-462 | | |
| L654 | 6140004170 | COL | LR-462 | | |
| L655 | 6200005131 | S.COL | NLC453232T-101K-PF | T | 92.3/29.8 |
| L701 | 6200005131 | S.COL | NLC453232T-101K-PF | T | 67.2/133.8 |
| L702 | 6140004130 | COL | LR-461 | | |
| L703 | 6140004070 | COL | LR-460 | | |
| L704 | 6140004070 | COL | LR-460 | | |
| L705 | 6200005131 | S.COL | NLC453232T-101K-PF | T | 69.6/14.1 |
| L751 | 6200005131 | S.COL | NLC453232T-101K-PF | T | 109.1/133.8 |
| L752 | 6110003900 | COL | LA-592 | | |
| L753 | 6110003890 | COL | LA-591 | | |
| L754 | 6110003890 | COL | LA-591 | | |
| L755 | 6200005131 | S.COL | NLC453232T-101K-PF | T | 111.4/29.8 |
| L801 | 6200001831 | S.COL | NLV32T-100J | T | 165.9/163.4 |
| L802 | 6110003880 | COL | LA-590 | | |
| L803 | 6110003870 | COL | LA-589 | | |
| L804 | 6110003870 | COL | LA-589 | | |
| L805 | 6200001831 | S.COL | NLV32T-100J | T | 173.9/22.8 |
| | | | | | |
| C401 | 4030006880 | S.CER | C1608 JB 1H 472K-T | T | 25.4/130.4 |
| C402 | 4010008200 | CER | HM11TJ SL 331J 500V | | |
| C403 | 4010008200 | CER | HM11TJ SL 331J 500V | | |
| C404 | 4010008300 | CER | HM11TJ SL 391J 500V | | |
| C405 | 4010008300 | CER | HM11TJ SL 391J 500V | | |
| C406 | 4010008210 | CER | HM60TJ SL 560J 500V | | |
| C407 | 4010007590 | CER | HM15SJ SL 681J 500V | | |
| C408 | 4010007590 | CER | HM15SJ SL 681J 500V | | |
| C409 | 4010007590 | CER | HM15SJ SL 681J 500V | | |
| C410 | 4010005870 | CER | HM95SJ SL 221J 500V | | |
| C411 | 4010008280 | CER | HM95TJ SL 221J 500V | | |
| C412 | 4010008370 | CER | HM60TJ SL 150J 500V | | |
| C413 | 4010007590 | CER | HM15SJ SL 681J 500V | | |
| C414 | 4010007590 | CER | HM15SJ SL 681J 500V | | |
| C415 | 4010007590 | CER | HM15SJ SL 681J 500V | | |
| C416 | 4010008300 | CER | HM11TJ SL 391J 500V | | |
| C417 | 4010008230 | CER | HM60TJ SL 820J 500V | | |
| C418 | 4010007590 | CER | HM15SJ SL 681J 500V | | |
| C419 | 4010007590 | CER | HM15SJ SL 681J 500V | | |
| C420 | 4030006880 | S.CER | C1608 JB 1H 472K-T | T | 11.6/26.3 |
| C451 | 4030006880 | S.CER | C1608 JB 1H 472K-T | T | 26.6/127.9 |
| C452 | 4010008290 | CER | HM95TJ SL 271J 500V | | |
| C453 | 4010008280 | CER | HM95TJ SL 221J 500V | | |
| C454 | 4010008240 | CER | HM60TJ SL 101J 500V | | |
| C455 | 4010005810 | CER | HM74SJ SL 111J 500V | | |
| C456 | 4010007490 | CER | HM15SJ SL 561J 500V | | |
| C457 | 4010006410 | CER | HM13SJ SL 471J 500V | | |
| C458 | 4010008250 | CER | HM74TJ SL 121J 500V | | |
| C459 | 4010005810 | CER | HM74SJ SL 111J 500V | | |
| C461 | 4010007490 | CER | HM15SJ SL 561J 500V | | |
| C462 | 4010007490 | CER | HM15SJ SL 561J 500V | | |
| C463 | 4010008340 | CER | HM60TJ SL 270J 500V | | |
| C464 | 4010008320 | CER | HM60TJ SL 390J 500V | | |
| C465 | 4010007490 | CER | HM15SJ SL 561J 500V | | |
| C466 | 4010008220 | CER | HM60TJ SL 680J 500V | | |
| C467 | 4030006880 | S.CER | C1608 JB 1H 472K-T | T | 32.4/23.4 |
| C468 | 4010008230 | CER | HM60TJ SL 820J 500V | | |
| C501 | 4030006880 | S.CER | C1608 JB 1H 472K-T | T | 47.6/127.3 |
| C502 | 4010008280 | CER | HM95TJ SL 221J 500V | | |
| C503 | 4010008260 | CER | HM74TJ SL 151J 500V | | |
| C504 | 4010008280 | CER | HM95TJ SL 221J 500V | | |
| C506 | 4010008200 | CER | HM11TJ SL 331J 500V | | |
| C507 | 4010008280 | CER | HM95TJ SL 221J 500V | | |
| C508 | 4010008280 | CER | HM95TJ SL 221J 500V | | |
| C509 | 4010005810 | CER | HM74SJ SL 111J 500V | | |
| C511 | 4010008300 | CER | HM11TJ SL 391J 500V | | |
| C512 | 4010008300 | CER | HM11TJ SL 391J 500V | | |
| C513 | 4010008260 | CER | HM74TJ SL 151J 500V | | |
| C514 | 4010008320 | CER | HM60TJ SL 390J 500V | | |

M.=Mounted side (T: Mounted on the Top side, B: Mounted on the Bottom side)
S.=Surface mount

## [FILTER UNIT]

| REF NO. | ORDER NO. | DESCRIPTION | | M. | H/V LOCATION |
|---|---|---|---|---|---|
| C515 | 4010008280 | CER | HM95TJ SL 221J 500V | | |
| C516 | 4010008280 | CER | HM95TJ SL 221J 500V | | |
| C517 | 4030006880 | S.CER | C1608 JB 1H 472K-T | T | 54.7/28.4 |
| C518 | 4010008340 | CER | HM60TJ SL 270J 500V | | |
| C551 | 4030006880 | S.CER | C1608 JB 1H 472K-T | T | 149.9/122.5 |
| C552 | 4010005860 | CER | HM95SJ SL 201J 500V | | |
| C554 | 4010008230 | CER | HM60TJ SL 820J 500V | | |
| C555 | 4010008370 | CER | HM60TJ SL 150J 500V | | |
| C556 | 4010008290 | CER | HM95TJ SL 271J 500V | | |
| C557 | 4010008290 | CER | HM95TJ SL 271J 500V | | |
| C558 | 4010008320 | CER | HM60TJ SL 390J 500V | | |
| C559 | 4010008330 | CER | HM60TJ SL 330J 500V | | |
| C560 | 4010008340 | CER | HM60TJ SL 270J 500V | | |
| C561 | 4010008200 | CER | HM11TJ SL 331J 500V | | |
| C562 | 4010008290 | CER | HM95TJ SL 271J 500V | | |
| C563 | 4010008330 | CER | HM60TJ SL 330J 500V | | |
| C564 | 4010005650 | CER | HM60SJ SL 200J 500V | | |
| C565 | 4010008280 | CER | HM95TJ SL 221J 500V | | |
| C566 | 4010008350 | CER | HM60TJ SL 220J 500V | | |
| C567 | 4030006880 | S.CER | C1608 JB 1H 472K-T | T | 152.2/32.2 |
| C601 | 4030006880 | S.CER | C1608 JB 1H 472K-T | T | 130.2/125 |
| C604 | 4010008230 | CER | HM60TJ SL 820J 500V | | |
| C605 | 4010008370 | CER | HM60TJ SL 150J 500V | | |
| C606 | 4010008280 | CER | HM95TJ SL 221J 500V | | |
| C607 | 4010008220 | CER | HM60TJ SL 680J 500V | | |
| C608 | 4010008350 | CER | HM60TJ SL 220J 500V | | |
| C609 | 4010008340 | CER | HM60TJ SL 270J 500V | | |
| C610 | 4010008200 | CER | HM11TJ SL 331J 500V | | |
| C611 | 4010008230 | CER | HM60TJ SL 820J 500V | | |
| C612 | 4010008360 | CER | HM60TJ SL 180J 500V | | |
| C613 | 4010008260 | CER | HM74TJ SL 151J 500V | | |
| C614 | 4010008230 | CER | HM60TJ SL 820J 500V | | |
| C615 | 4030006880 | S.CER | C1608 JB 1H 472K-T | T | 130.2/18.3 |
| C651 | 4030006880 | S.CER | C1608 JB 1H 472K-T | T | 88.3/124.9 |
| C654 | 4010008360 | CER | HM60TJ SL 180J 500V | | |
| C655 | 4010008320 | CER | HM60TJ SL 390J 500V | | |
| C656 | 4010008280 | CER | HM95TJ SL 221J 500V | | |
| C657 | 4010008220 | CER | HM60TJ SL 680J 500V | | |
| C658 | 4010008360 | CER | HM60TJ SL 180J 500V | | |
| C659 | 4010008380 | CER | HM60TJ SL 120J 500V | | |
| C660 | 4010008280 | CER | HM95TJ SL 221J 500V | | |
| C661 | 4010008240 | CER | HM60TJ SL 101J 500V | | |
| C662 | 4010008390 | CER | HM60TJ SL 100D 500V | | |
| C663 | 4010008250 | CER | HM74TJ SL 121J 500V | | |
| C664 | 4010008320 | CER | HM60TJ SL 390J 500V | | |
| C665 | 4030006880 | S.CER | C1608 JB 1H 472K-T | T | 96.6/28.6 |
| C701 | 4030006880 | S.CER | C1608 JB 1H 472K-T | T | 68.6/127.5 |
| C703 | 4010008370 | CER | HM60TJ SL 150J 500V | | |
| C704 | 4010008350 | CER | HM60TJ SL 220J 500V | | |
| C705 | 4010005650 | CER | HM60SJ SL 200J 500V | | |
| C706 | 4010005860 | CER | HM95SJ SL 201J 500V | | |
| C707 | 4010008310 | CER | HM60TJ SL 470J 500V | | |
| C708 | 4010008370 | CER | HM60TJ SL 150J 500V | | |
| C709 | 4010008280 | CER | HM95TJ SL 221J 500V | | |
| C710 | 4010008350 | CER | HM60TJ SL 220J 500V | | |
| C712 | 4010008330 | CER | HM60TJ SL 330J 500V | | |
| C713 | 4010008310 | CER | HM60TJ SL 470J 500V | | |
| C714 | 4030006880 | S.CER | C1608 JB 1H 472K-T | T | 69.6/18.3 |
| C715 | 4010008360 | CER | HM60TJ SL 180J 500V | | |
| C751 | 4030006880 | S.CER | C1608 JB 1H 472K-T | T | 109.1/125 |
| C755 | 4010008240 | CER | HM60TJ SL 101J 500V | | |
| C756 | 4010008230 | CER | HM60TJ SL 820J 500V | | |
| C757 | 4010008360 | CER | HM60TJ SL 180J 500V | | |
| C758 | 4010008210 | CER | HM60TJ SL 560J 500V | | |
| C759 | 4010008240 | CER | HM60TJ SL 101J 500V | | |
| C760 | 4010008400 | CER | HM60TJ SL 060D 500V | | |
| C761 | 4010008310 | CER | HM60TJ SL 470J 500V | | |
| C763 | 4030006880 | S.CER | C1608 JB 1H 472K-T | T | 115.6/28.6 |
| C764 | 4010005650 | CER | HM60SJ SL 200J 500V | | |
| C765 | 4010008370 | CER | HM60TJ SL 150J 500V | | |
| C801 | 4030006880 | S.CER | C1608 JB 1H 472K-T | T | 168.6/158.6 |
| C804 | 4010008360 | CER | HM60TJ SL 180J 500V | | |
| C805 | 4010008320 | CER | HM60TJ SL 390J 500V | | |
| C806 | 4010008310 | CER | HM60TJ SL 470J 500V | | |
| C807 | 4010005600 | CER | HM60SJ SL 090D 500V | | |
| C808 | 4010008330 | CER | HM60TJ SL 330J 500V | | |
| C809 | 4010008320 | CER | HM60TJ SL 390J 500V | | |
| C810 | 4010008410 | CER | HM60TJ SL 030C 500V | | |
| C811 | 4010005560 | CER | HM60SJ SL 050C 500V | | |
| C813 | 4030006880 | S.CER | C1608 JB 1H 472K-T | T | 175.6/26 |
| | | | | | |
| RL401 | 6330001471 | RLY | AJS1311F-K2 | | |
| RL402 | 6330001471 | RLY | AJS1311F-K2 | | |
| RL451 | 6330001471 | RLY | AJS1311F-K2 | | |
| RL452 | 6330001471 | RLY | AJS1311F-K2 | | |
| RL501 | 6330001471 | RLY | AJS1311F-K2 | | |
| RL502 | 6330001471 | RLY | AJS1311F-K2 | | |
| RL551 | 6330001471 | RLY | AJS1311F-K2 | | |
| RL552 | 6330001471 | RLY | AJS1311F-K2 | | |
| RL601 | 6330001471 | RLY | AJS1311F-K2 | | |
| RL602 | 6330001471 | RLY | AJS1311F-K2 | | |
| RL651 | 6330001471 | RLY | AJS1311F-K2 | | |
| RL652 | 6330001471 | RLY | AJS1311F-K2 | | |
| RL701 | 6330001471 | RLY | AJS1311F-K2 | | |
| RL702 | 6330001471 | RLY | AJS1311F-K2 | | |
| RL751 | 6330001471 | RLY | AJS1311F-K2 | | |
| RL752 | 6330001471 | RLY | AJS1311F-K2 | | |
| RL801 | 6330001460 | RLY | FTR-F1CA012V | | |
| RL802 | 6330001460 | RLY | FTR-F1CA012V | | |
| | | | | | |
| J901 | 6510017930 | CNR | 1771P145-20 | | |
| J902 | 6510022031 | S.CNR | B10B-ZR-SM4-TF (LF) (SN) | T | 145.3/165.2 |
| J903 | 6510019971 | S.CNR | 52808-1071 | T | 4/156 |
| J904 | 6510017930 | CNR | 1771P145-20 | | |

## [FILTER UNIT]

| REF NO. | ORDER NO. | DESCRIPTION | | M. | H/V LOCATION |
|---|---|---|---|---|---|
| J905 | 6510019421 | S.CNR | B8B-ZR-SM4-TF (LF) (SN) | T | 146.8/160.2 |

## [MEMORY BOARD]

| REF NO. | ORDER NO. | DESCRIPTION | | M. | H/V LOCATION |
|---|---|---|---|---|---|
| IC1 | 1130013514 | S.IC | JS28F128J3D-75(SX-2590A-8) | T | 39.8/26.2 |
| IC2 | 1130013515 | S.IC | JS28F128J3D-75(SX-2590A-9) | T | 24/26.2 |
| | | | | | |
| C1 | 4030011600 | S.CER | C1608 JB 1E 104K-T | T | 41.8/38.8 |
| C2 | 4030011600 | S.CER | C1608 JB 1E 104K-T | T | 39.9/13.2 |
| C3 | 4030011600 | S.CER | C1608 JB 1E 104K-T | T | 36.8/13.2 |
| C4 | 4030011600 | S.CER | C1608 JB 1E 104K-T | T | 26/38.8 |
| C5 | 4030011600 | S.CER | C1608 JB 1E 104K-T | T | 24/13.2 |
| C6 | 4030011600 | S.CER | C1608 JB 1E 104K-T | T | 21/13.2 |
| | | | | | |
| J1 | 6510024210 | S.CNR | AXK6S30435P | T | 55/20 |
| J2 | 6510024200 | S.CNR | AXK6S40435P | T | 10/20 |

M.=Mounted side (T: Mounted on the Top side, B: Mounted on the Bottom side)
S.=Surface mount

# BOARD LAYOUTS

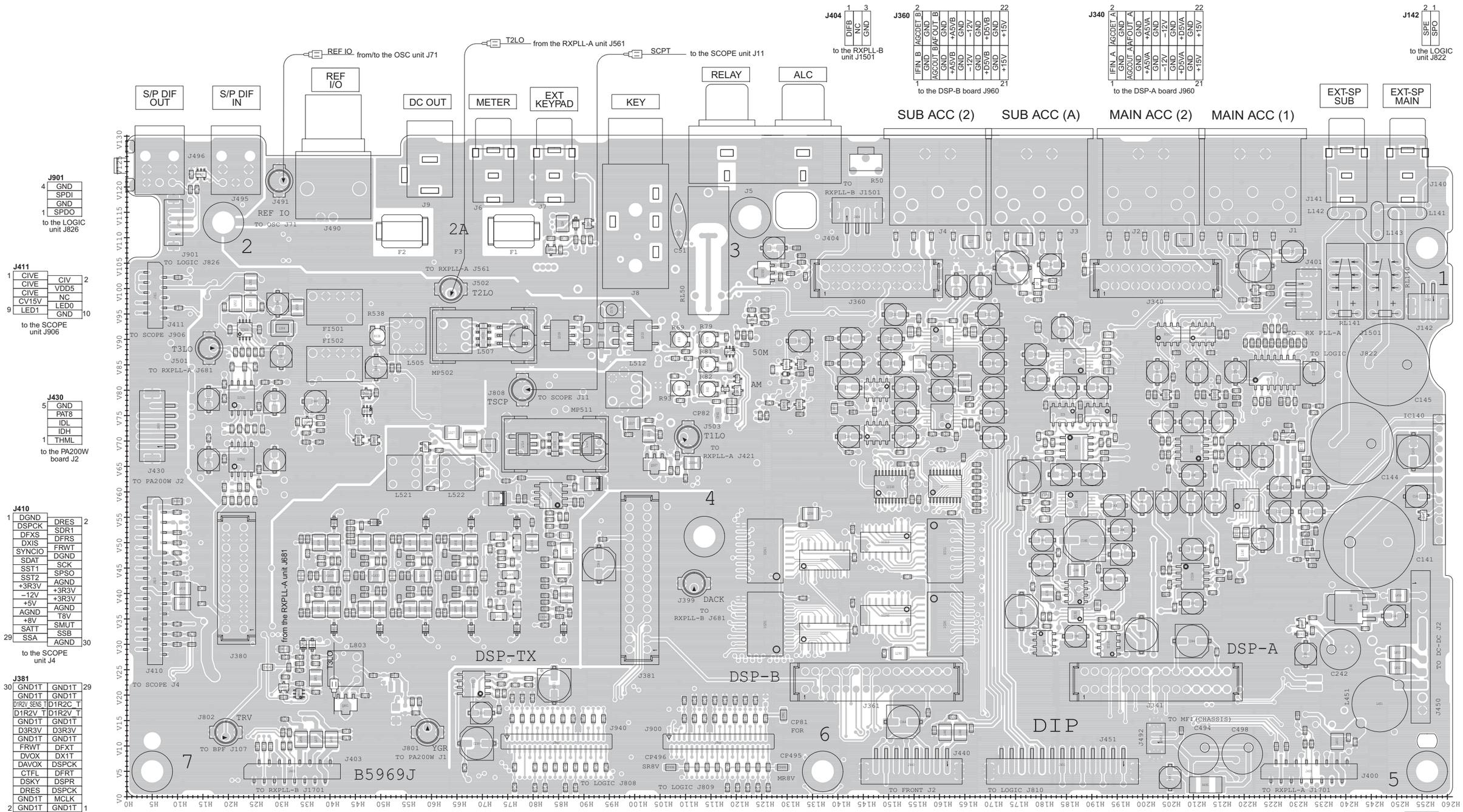

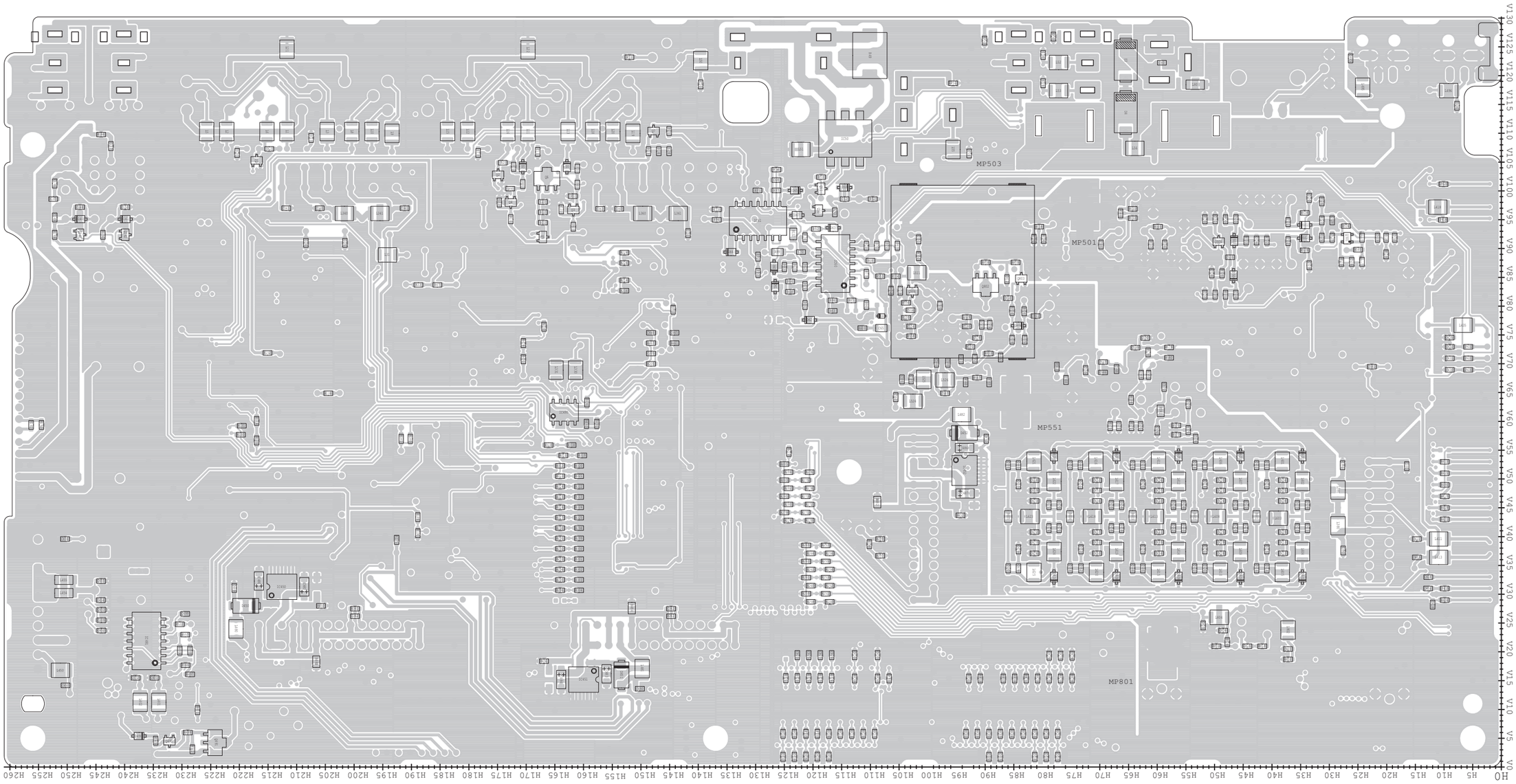
MP503
MP501
MP551
MP801
V130 V125 V120 V115 V110 V105 V100 V95 V90 V85 V80 V75 V70 V65 V60 V55 V50 V45 V40 V35 V30 V25 V20 V15 V10 V5 V0
H0 H5 H10 H15 H20 H25 H30 H35 H40 H45 H50 H55 H60 H65 H70 H75 H80 H85 H90 H95 H100 H105 H110 H115 H120 H125 H130 H135 H140 H145 H150 H155 H160 H165 H170 H175 H180 H185 H190 H195 H200 H205 H210 H215 H220 H225 H230 H235 H240 H245 H250 H255 H260

# SECTION 11 VOLTAGE DIAGRAMS

## DISPLAY BOARD

## CF BOARD

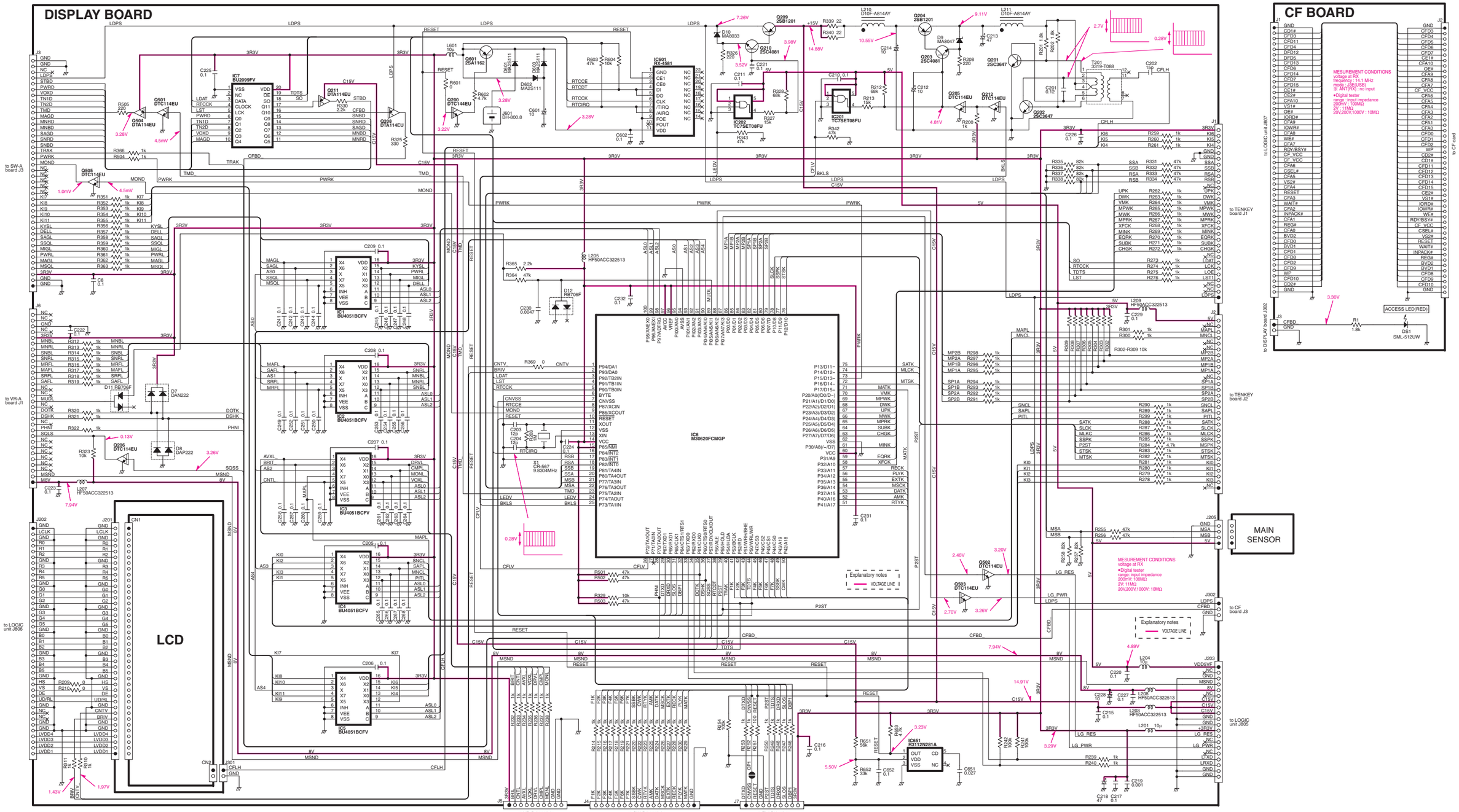

## SW-A BOARD

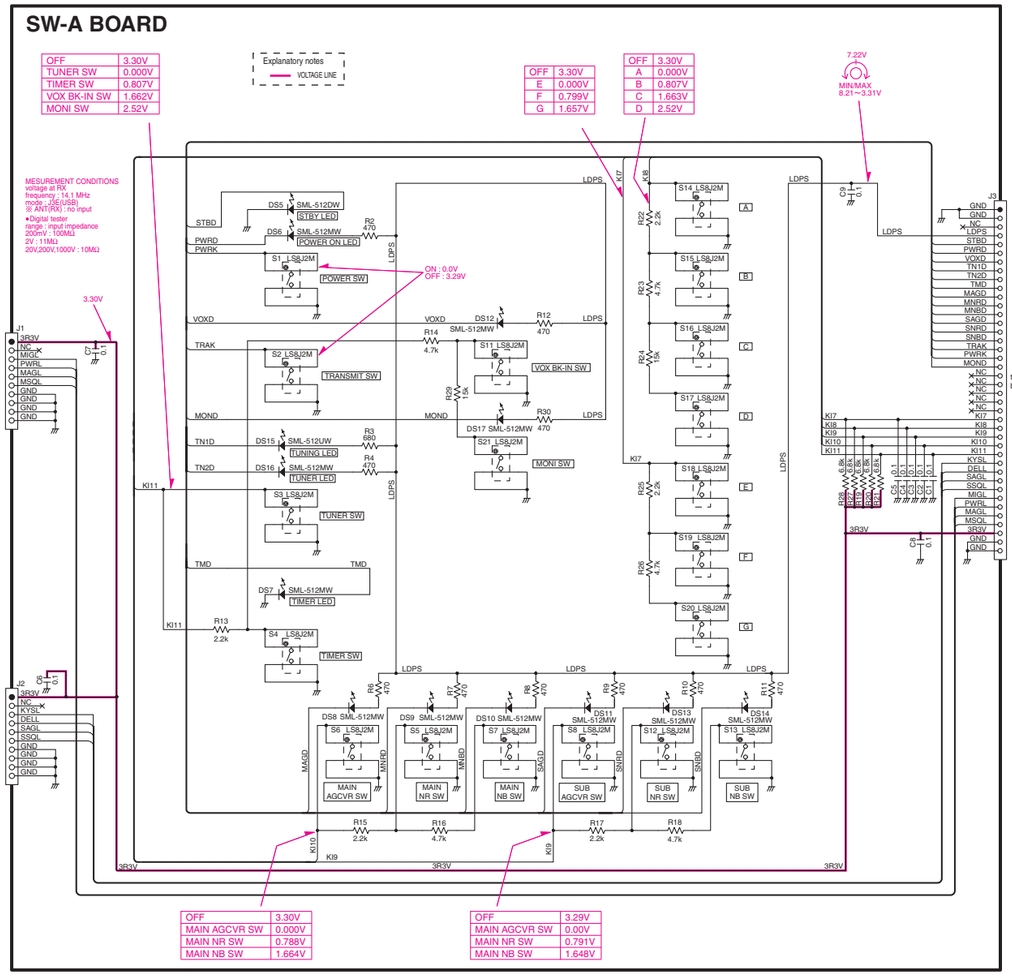


## VR-A BOARD

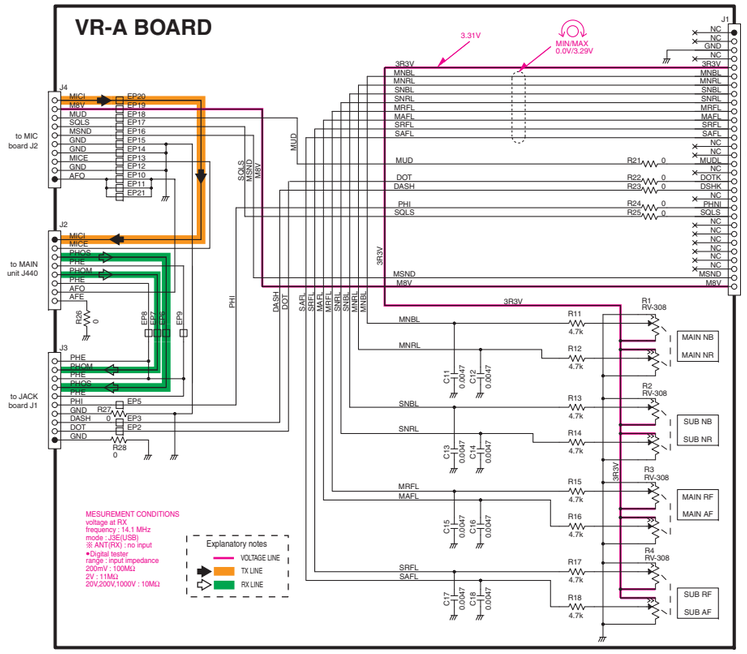


## VR-D BOARD




## MIC BOARD

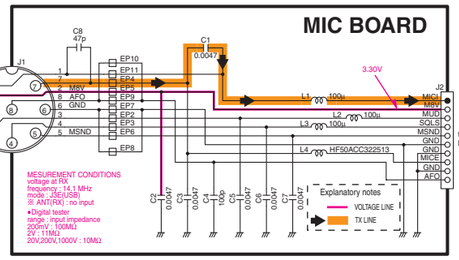


## SW-B BOARD

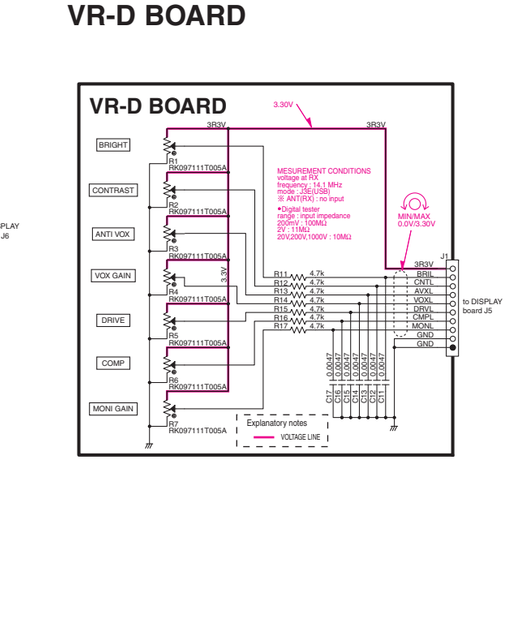


## VR-B BOARD

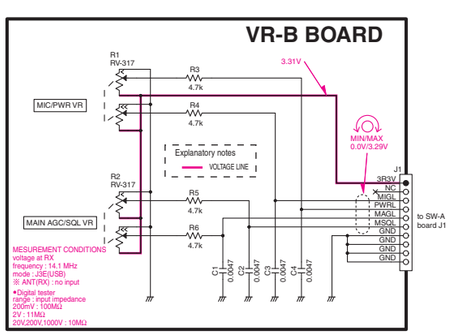


## VR-C BOARD

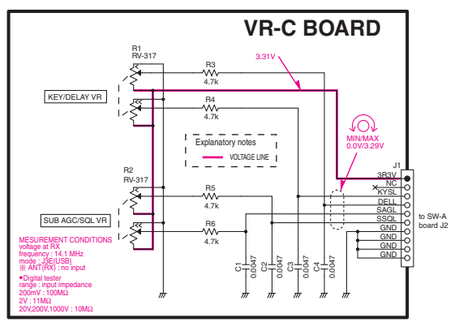


## JACK BOARD

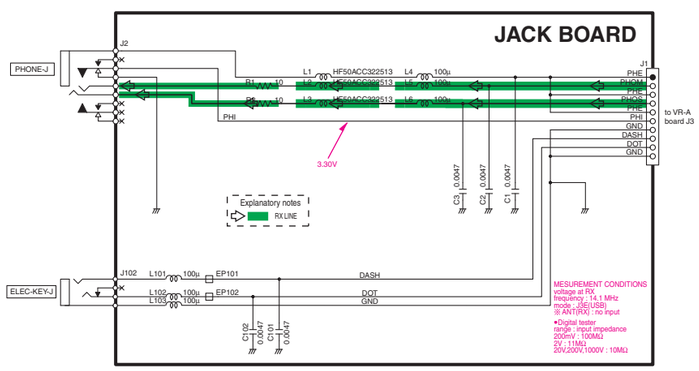

# TENKEY BOARD

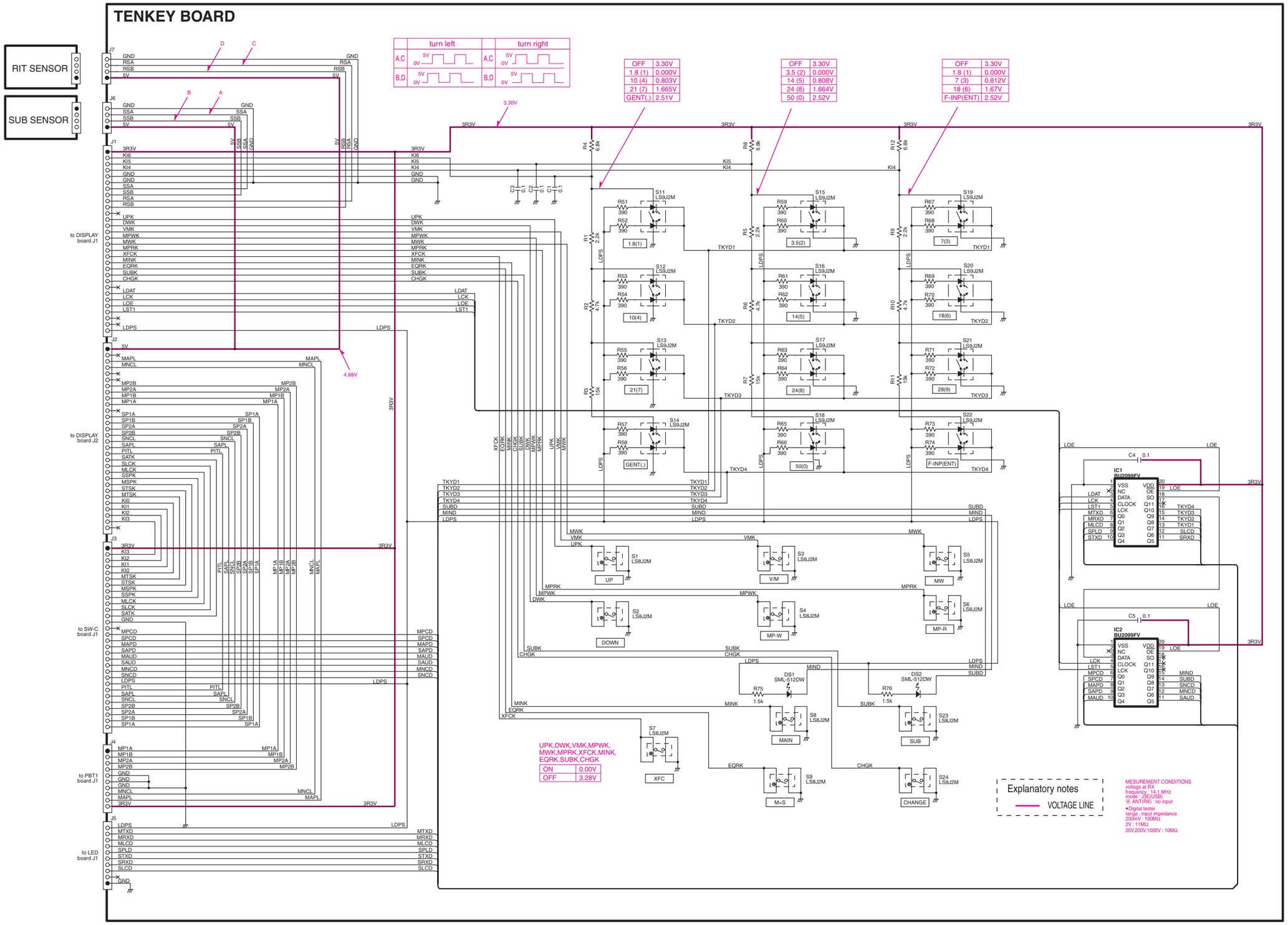

## SW-C BOARD

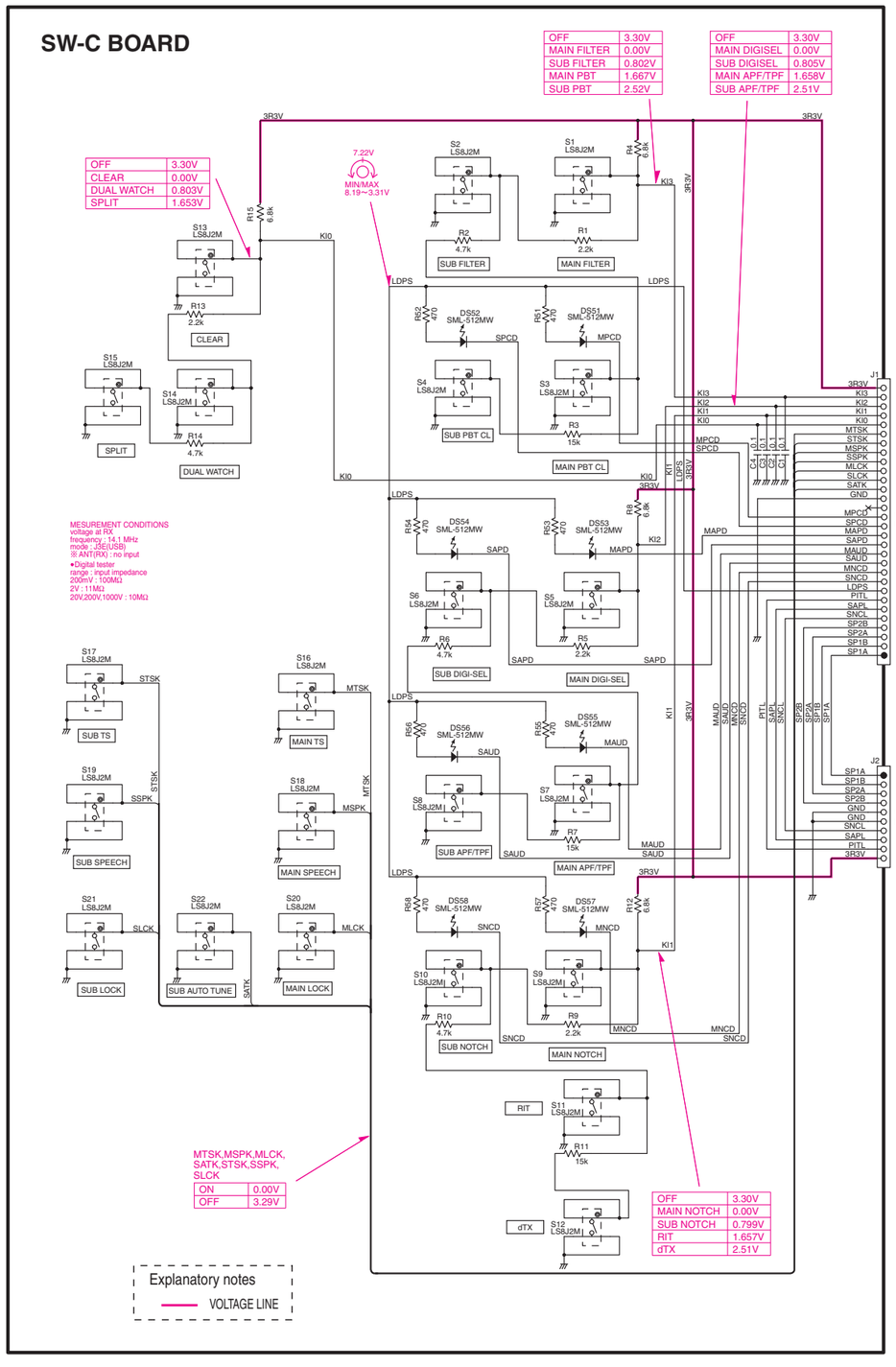


## PBT1 BOARD

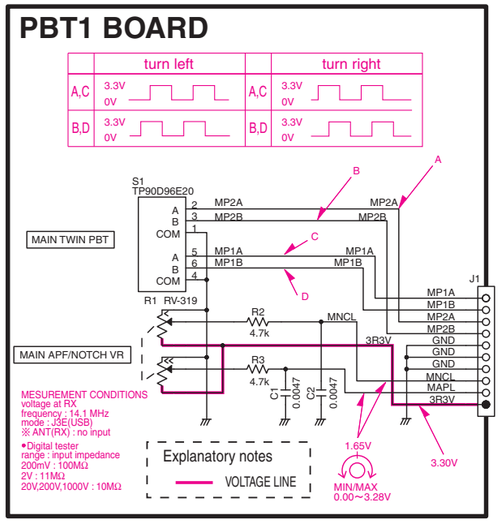


## PBT2 BOARD

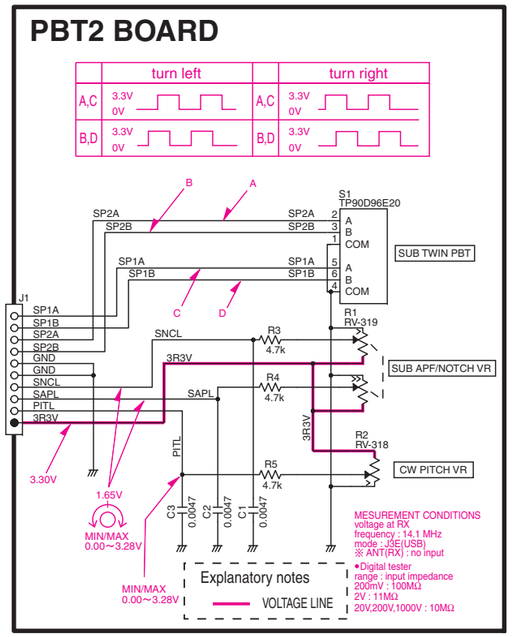


## LED BOARD

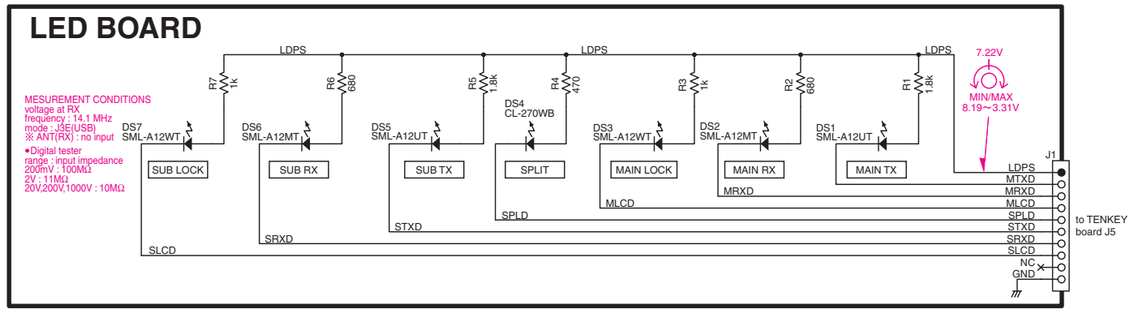

# LOGIC UNIT AND MEMORY BOARD

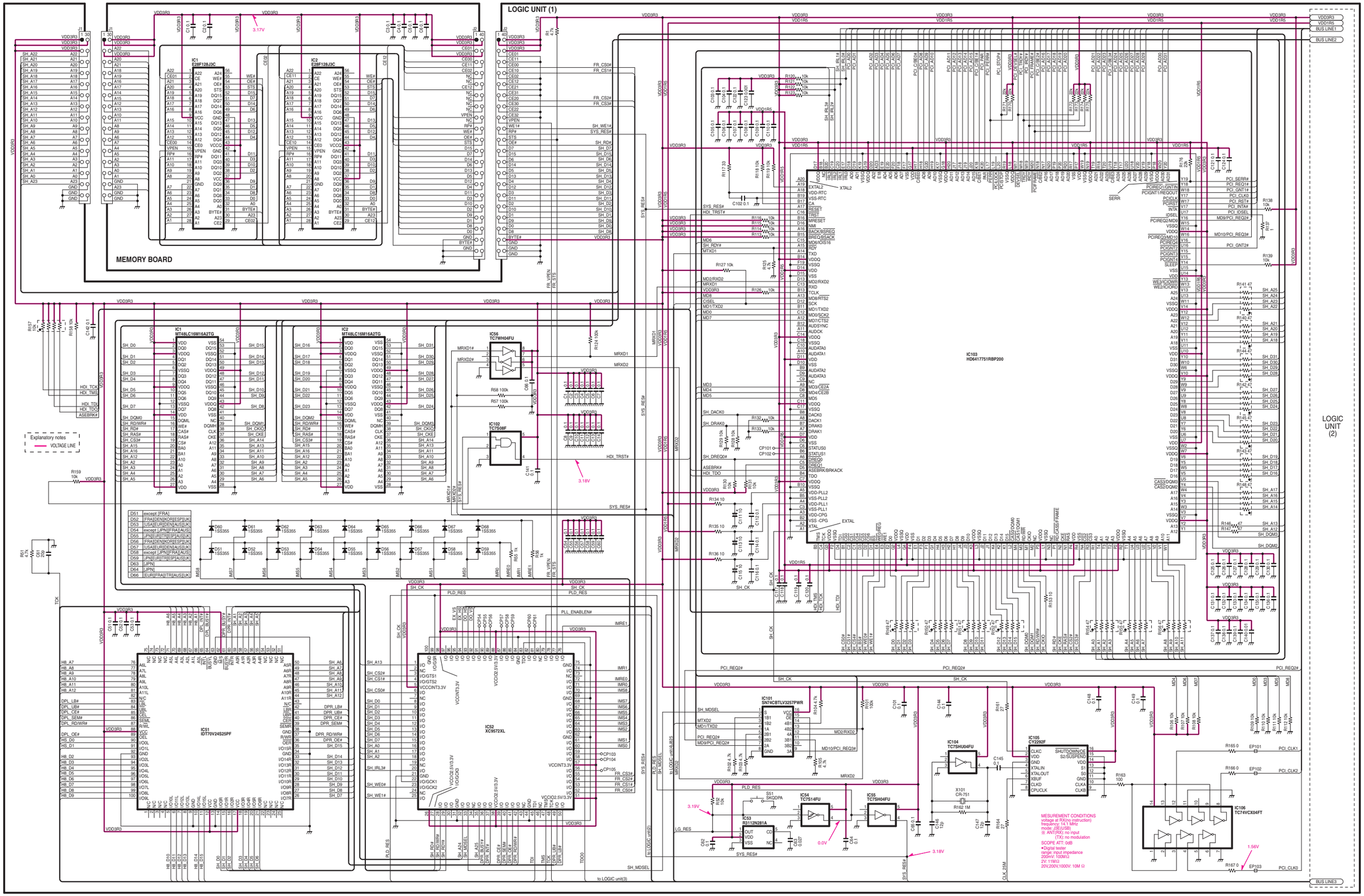

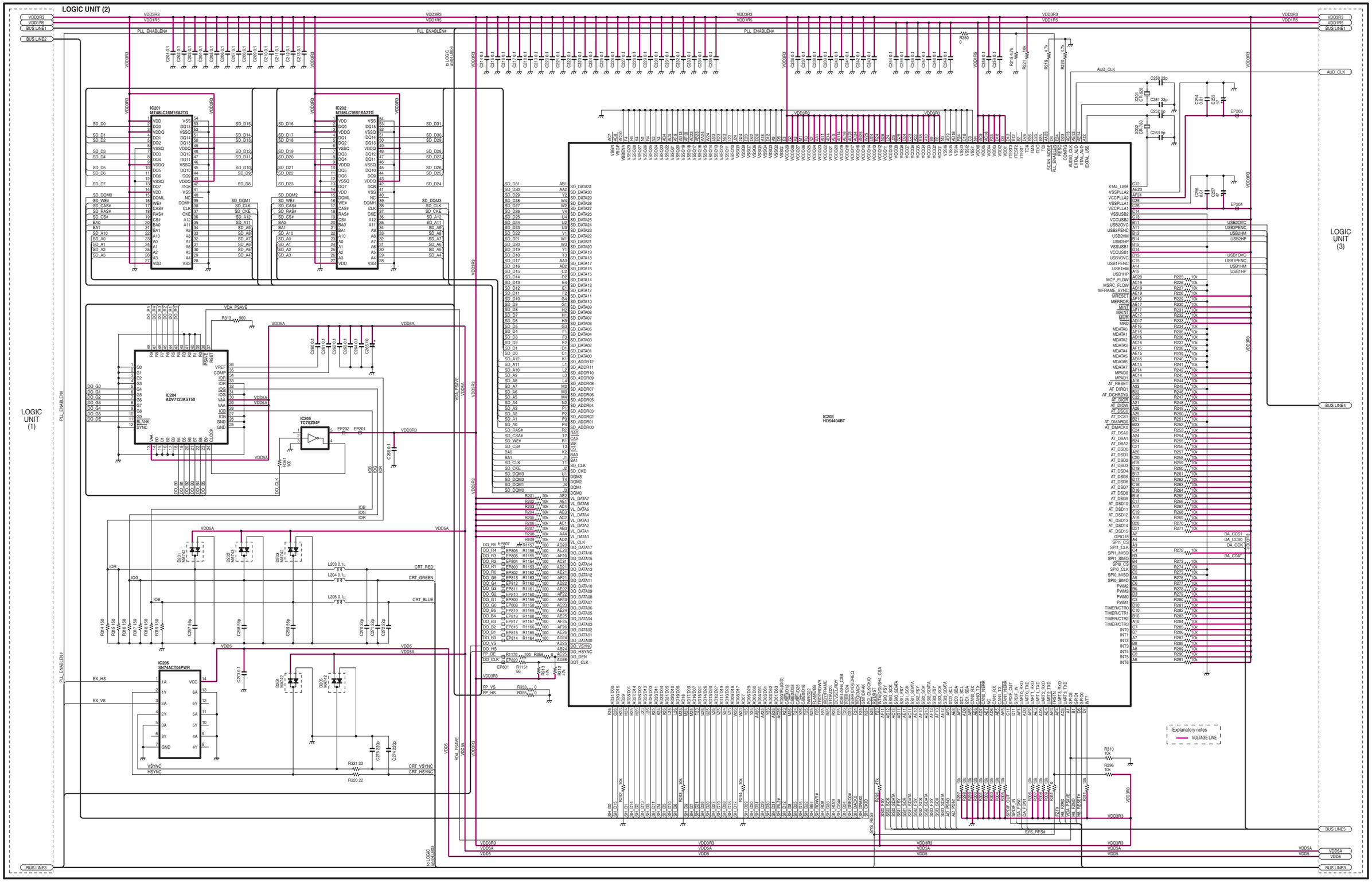
LOGIC UNIT (2)
LOGIC UNIT (1)
LOGIC UNIT (3)
IC201 MT48LC16M16A2TG
IC202 MT48LC16M16A2TG
IC203 HD64404BT
IC204 ADV7123KST50
IC205 TC7SZ04F
IC206 SN74ACT04PWR
Explanatory notes
VOLTAGE LINE

LOGIC UNIT (3)

LOGIC UNIT (2)

LOGIC UNIT (4)

IC401 PCI1410APGE

IC404 RTL8139C+

IC605 XC9572XL

IC604 HD64F2377VFQ33V

IC207 NC7W04F

IC208 IP01875G

IC209 AK5355VT

IC210 AK5355VT

IC211 AK4384VT

IC212 AK4384VT

IC402 TPS2211AIDBR

IC403 BR93LC46FW

IC603 BU9480F

IC610 HN58X2464TI

IC601 TC7SH04FU

IC602 TC7SET04FU

Q601 2SC4081

Q602 2SA1576

X601 CR-755

MESUREMENT CONDITIONS
voltage at RX(no instruction)
frequency: 14.1 MHz
mode: J3E(USB)
※ ANT(RX): no input
(TX): no modulation
SCOPE ATT: 0dB
•Digital tester
range: input impedance
200mV: 100MΩ
2V: 11MΩ
20V,200V,1000V: 10M Ω

Explanatory notes
VOLTAGE LINE

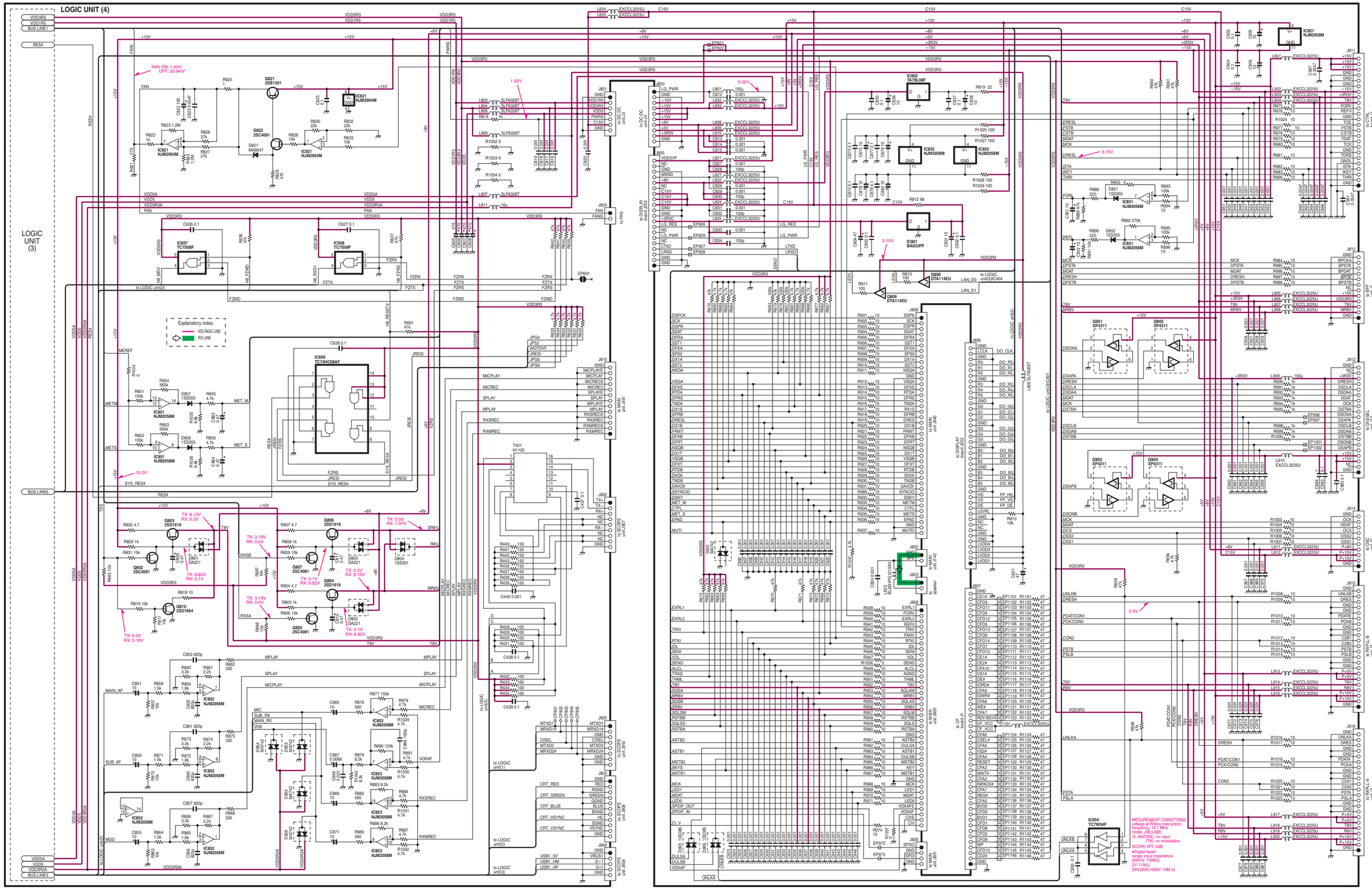
LOGIC UNIT (4)
LOGIC UNIT (3)
Explanatory notes
VOLTAGE LINE
RX LINE
FAN ON: 1.49V
OFF: 20.9mV
TX: 8.13V
RX: 0.0V
TX: 3.18V
RX: 0.0V
TX: 8.82V
RX: 0.1V
TX: 0.1V
RX: 8.82V
TX: 0.0V
RX: 3.18V
TX: 0.0V
RX: 7.97V
TX: 0.0V
RX: 8.19V
TX: 0.1V
RX: 8.82V
1.92V
0.02V
3.15V
15.0V
IC821 NJM2904M
IC607 TC7S08F
IC608 TC7S08F
IC609 TC74HC08AF
IC851 NJM2058M
IC852 NJM2058M
IC853 NJM2058M
IC801 BA033FP
IC802 TA78L08F
IC852 NJM2058M
IC853 NJM2058M
IC851 NJM2058M
IC854 TC7W04F
Q821 2SB1201
Q822 2SC4081
Q803 2SD1619
Q806 2SD1619
Q807 2SC4081
Q804 2SD1619
Q805 2SC4081
Q810 2SD1664
Q808 DTA114EU
Q809 DTA114EU
Q901 XP4311
Q902 XP4311
Q903 XP4311
Q904 XP4311
D821 MA8047
D801 DA221
D802 DA221
D803 DA221
D804 1SS301
D851 1SS355
D852 1SS355
D857 1SS355
D858 1SS355
D864 MAZ4
D865 MAZ4
D866 MAZ4
D867 MAZ4
D805 1SS346
D806 1SS346
IC810 RN5VD33A
IC811 RN5VD33A
IC812 RN5VD33A
IC813 RN5VD33A
IC814 RN5VD33A
IC815 RN5VD33A
IC816 RN5VD33A
IC817 RN5VD33A
IC818 RN5VD33A
IC819 RN5VD33A
IC820 RN5VD33A
IC821 RN5VD33A
IC822 RN5VD33A
IC823 RN5VD33A
IC824 RN5VD33A
IC825 RN5VD33A
IC826 RN5VD33A
IC827 RN5VD33A
IC828 RN5VD33A
IC829 RN5VD33A
IC830 RN5VD33A
IC831 RN5VD33A
IC832 RN5VD33A
IC833 RN5VD33A
IC834 RN5VD33A
IC835 RN5VD33A
IC836 RN5VD33A
IC837 RN5VD33A
IC838 RN5VD33A
IC839 RN5VD33A
IC840 RN5VD33A
IC841 RN5VD33A
IC842 RN5VD33A
IC843 RN5VD33A
IC844 RN5VD33A
IC845 RN5VD33A
IC846 RN5VD33A
IC847 RN5VD33A
IC848 RN5VD33A
IC849 RN5VD33A
IC850 RN5VD33A
IC851 RN5VD33A
IC852 RN5VD33A
IC853 RN5VD33A
IC854 RN5VD33A
IC855 RN5VD33A
IC856 RN5VD33A
IC857 RN5VD33A
IC858 RN5VD33A
IC859 RN5VD33A
IC860 RN5VD33A
IC861 RN5VD33A
IC862 RN5VD33A
IC863 RN5VD33A
IC864 RN5VD33A
IC865 RN5VD33A
IC866 RN5VD33A
IC867 RN5VD33A
IC868 RN5VD33A
IC869 RN5VD33A
IC870 RN5VD33A
IC871 RN5VD33A
IC872 RN5VD33A
IC873 RN5VD33A
IC874 RN5VD33A
IC875 RN5VD33A
IC876 RN5VD33A
IC877 RN5VD33A
IC878 RN5VD33A
IC879 RN5VD33A
IC880 RN5VD33A
IC881 RN5VD33A
IC882 RN5VD33A
IC883 RN5VD33A
IC884 RN5VD33A
IC885 RN5VD33A
IC886 RN5VD33A
IC887 RN5VD33A
IC888 RN5VD33A
IC889 RN5VD33A
IC890 RN5VD33A
IC891 RN5VD33A
IC892 RN5VD33A
IC893 RN5VD33A
IC894 RN5VD33A
IC895 RN5VD33A
IC896 RN5VD33A
IC897 RN5VD33A
IC898 RN5VD33A
IC899 RN5VD33A
IC900 RN5VD33A
IC901 RN5VD33A
IC902 RN5VD33A
IC903 RN5VD33A
IC904 RN5VD33A
IC905 RN5VD33A
IC906 RN5VD33A
IC907 RN5VD33A
IC908 RN5VD33A
IC909 RN5VD33A
IC910 RN5VD33A
IC911 RN5VD33A
IC912 RN5VD33A
IC913 RN5VD33A
IC914 RN5VD33A
IC915 RN5VD33A
IC916 RN5VD33A
IC917 RN5VD33A
IC918 RN5VD33A
IC919 RN5VD33A
IC920 RN5VD33A
IC921 RN5VD33A
IC922 RN5VD33A
IC923 RN5VD33A
IC924 RN5VD33A
IC925 RN5VD33A
IC926 RN5VD33A
IC927 RN5VD33A
IC928 RN5VD33A
IC929 RN5VD33A
IC930 RN5VD33A
IC931 RN5VD33A
IC932 RN5VD33A
IC933 RN5VD33A
IC934 RN5VD33A
IC935 RN5VD33A
IC936 RN5VD33A
IC937 RN5VD33A
IC938 RN5VD33A
IC939 RN5VD33A
IC940 RN5VD33A
IC941 RN5VD33A
IC942 RN5VD33A
IC943 RN5VD33A
IC944 RN5VD33A
IC945 RN5VD33A
IC946 RN5VD33A
IC947 RN5VD33A
IC948 RN5VD33A
IC949 RN5VD33A
IC950 RN5VD33A
IC951 RN5VD33A
IC952 RN5VD33A
IC953 RN5VD33A
IC954 RN5VD33A
IC955 RN5VD33A
IC956 RN5VD33A
IC957 RN5VD33A
IC958 RN5VD33A
IC959 RN5VD33A
IC960 RN5VD33A
IC961 RN5VD33A
IC962 RN5VD33A
IC963 RN5VD33A
IC964 RN5VD33A
IC965 RN5VD33A
IC966 RN5VD33A
IC967 RN5VD33A
IC968 RN5VD33A
IC969 RN5VD33A
IC970 RN5VD33A
IC971 RN5VD33A
IC972 RN5VD33A
IC973 RN5VD33A
IC974 RN5VD33A
IC975 RN5VD33A
IC976 RN5VD33A
IC977 RN5VD33A
IC978 RN5VD33A
IC979 RN5VD33A
IC980 RN5VD33A
IC981 RN5VD33A
IC982 RN5VD33A
IC983 RN5VD33A
IC984 RN5VD33A
IC985 RN5VD33A
IC986 RN5VD33A
IC987 RN5VD33A
IC988 RN5VD33A
IC989 RN5VD33A
IC990 RN5VD33A
IC991 RN5VD33A
IC992 RN5VD33A
IC993 RN5VD33A
IC994 RN5VD33A
IC995 RN5VD33A
IC996 RN5VD33A
IC997 RN5VD33A
IC998 RN5VD33A
IC999 RN5VD33A
MESUREMENT CONDITIONS
voltage at RX(no instruction)
frequency: 14.1 MHz
mode: J2E(USB)
※ ANT(RX): no input
(TX): no modulation
SCOPE ATT: 0dB
•Digital tester
range: input impedance
200mV: 10MΩ
2V: 11MΩ
20V,200V,1000V: 10M Ω

# MAIN UNIT

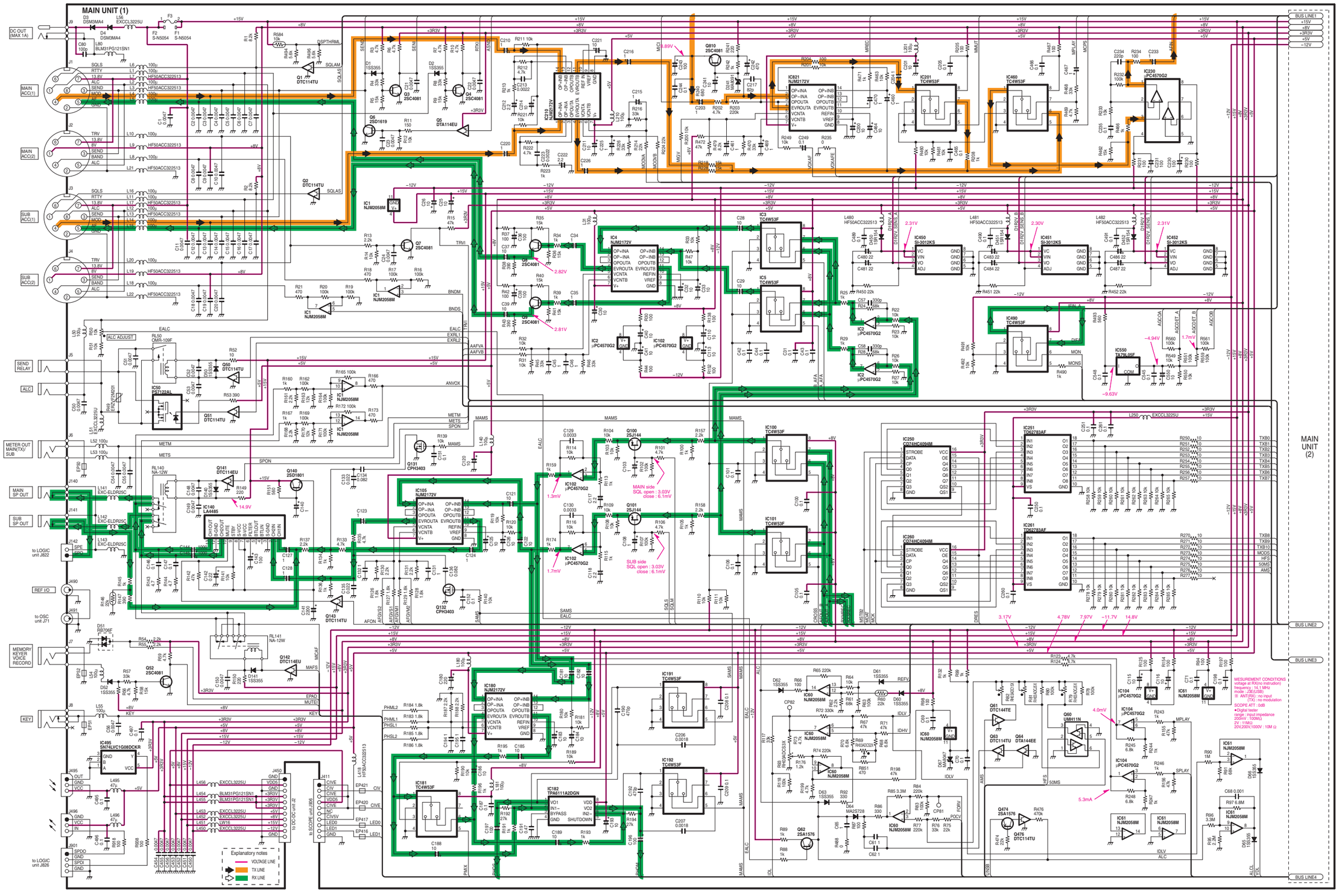
MAIN UNIT (1)
MAIN UNIT (2)
Explanatory notes
VOLTAGE LINE
TX LINE
RX LINE

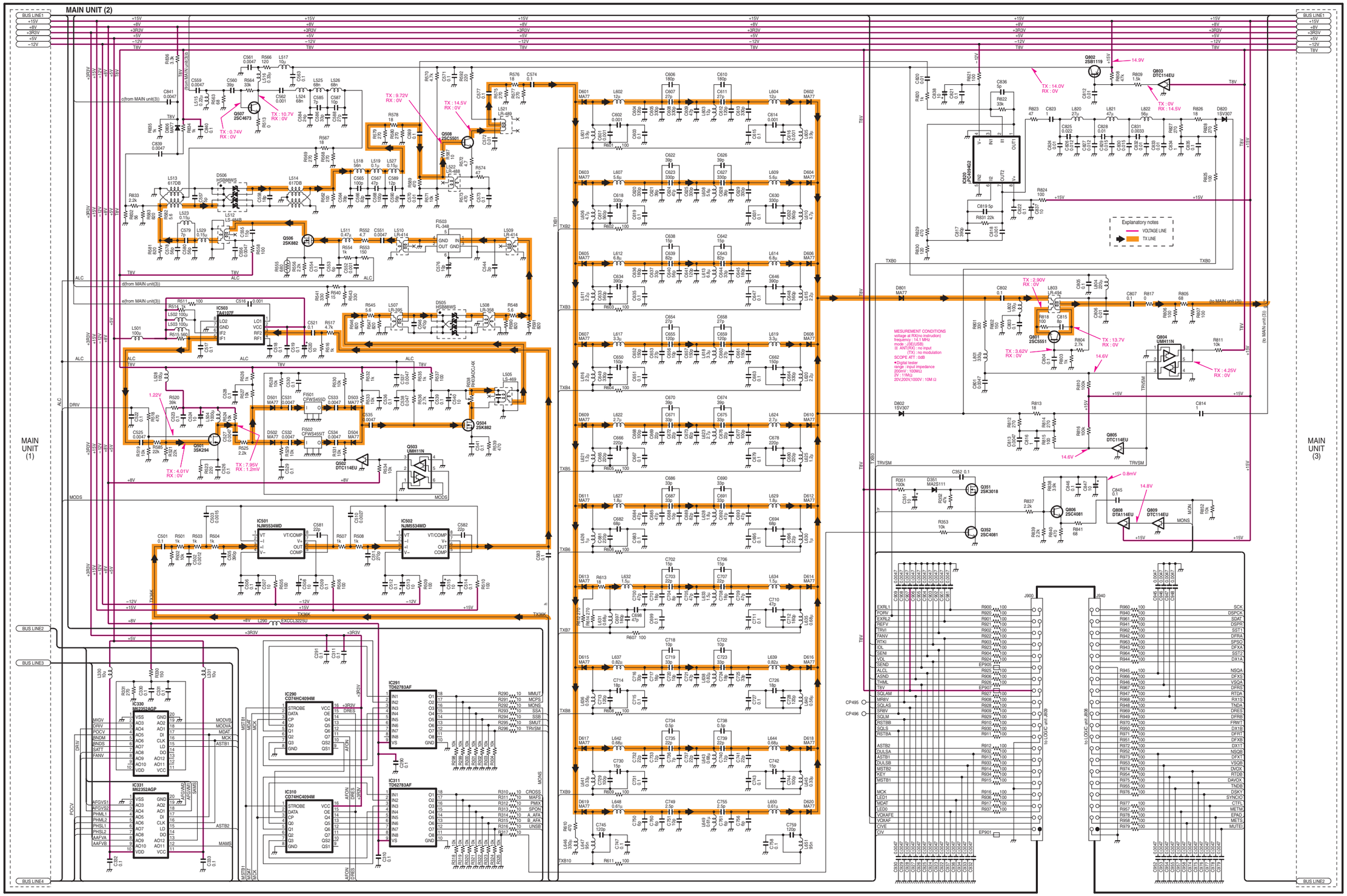
MAIN UNIT (2)
MAIN UNIT (1)
MAIN UNIT (3)
Explanatory notes
VOLTAGE LINE
TX LINE
MESUREMENT CONDITIONS
voltage at RX(no instruction)
frequency : 14.1 MHz
mode : JSE(USB)
※ ANT(RX) : no input
(TX) : no modulation
SCOPE ATT : 0dB
•Digital tester
range : input impedance
200mV : 100MΩ
2V : 1.1MΩ
20V,200V,1000V : 10M Ω
to LOGIC unit J809
to LOGIC unit J808
BUS LINE1
BUS LINE2
BUS LINE3
BUS LINE4

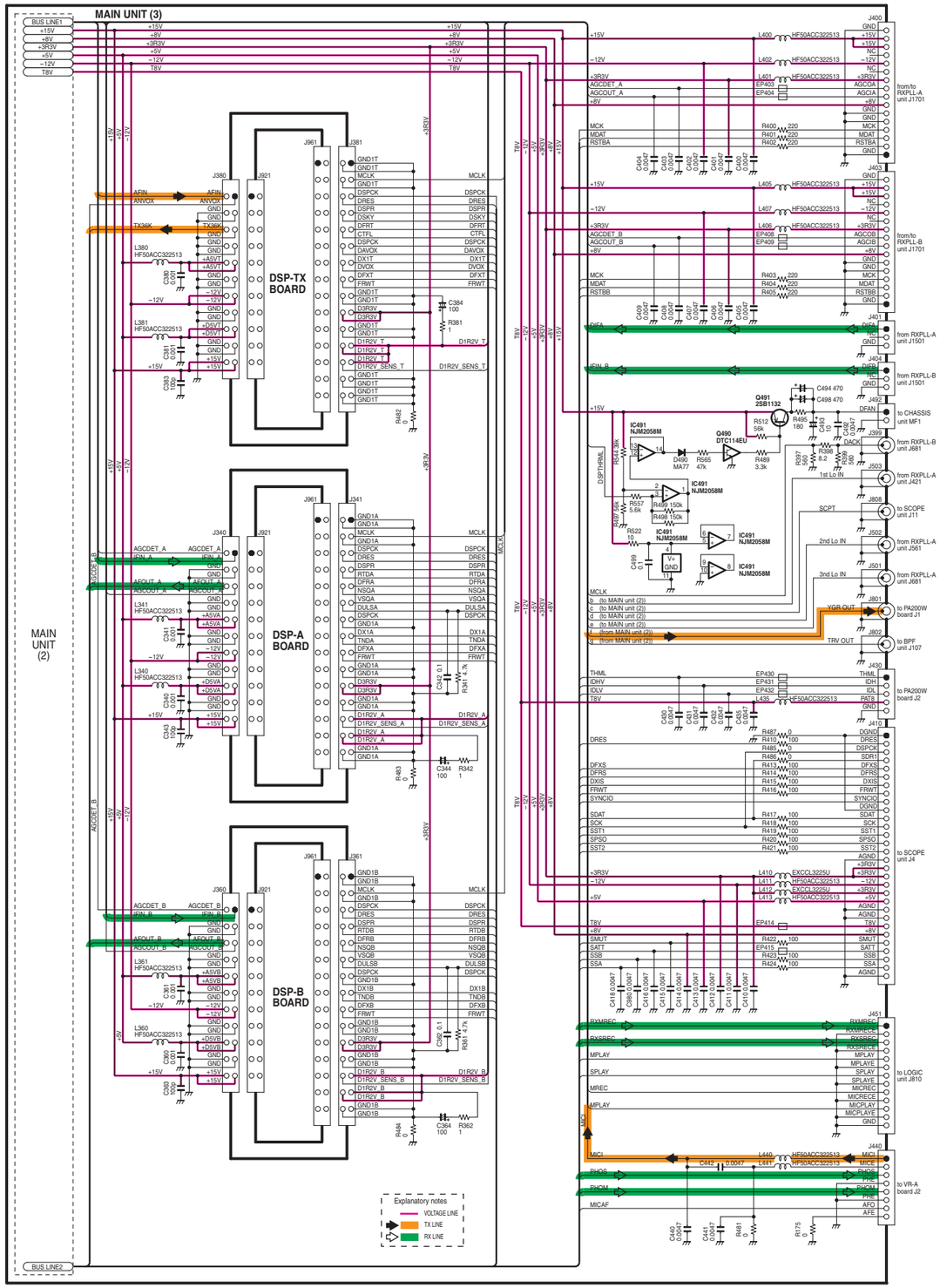
MAIN UNIT (3)
MAIN UNIT (2)
DSP-TX BOARD
DSP-A BOARD
DSP-B BOARD
BUS LINE1
BUS LINE2
Explanatory notes
VOLTAGE LINE
TX LINE
RX LINE
to/from RXPLL-A unit J1701
to/from RXPLL-B unit J1701
from RXPLL-A unit J1501
from RXPLL-B unit J1501
to CHASSIS unit MF1
from RXPLL-B unit J681
from RXPLL-A unit J421
to SCOPE unit J11
from RXPLL-A unit J561
from RXPLL-A unit J681
to PA200W board J1
to BPF unit J107
to PA200W board J2
to SCOPE unit J4
to LOGIC unit J810
to VR-A board J2

# DSP-A/DSP-B BOARDS

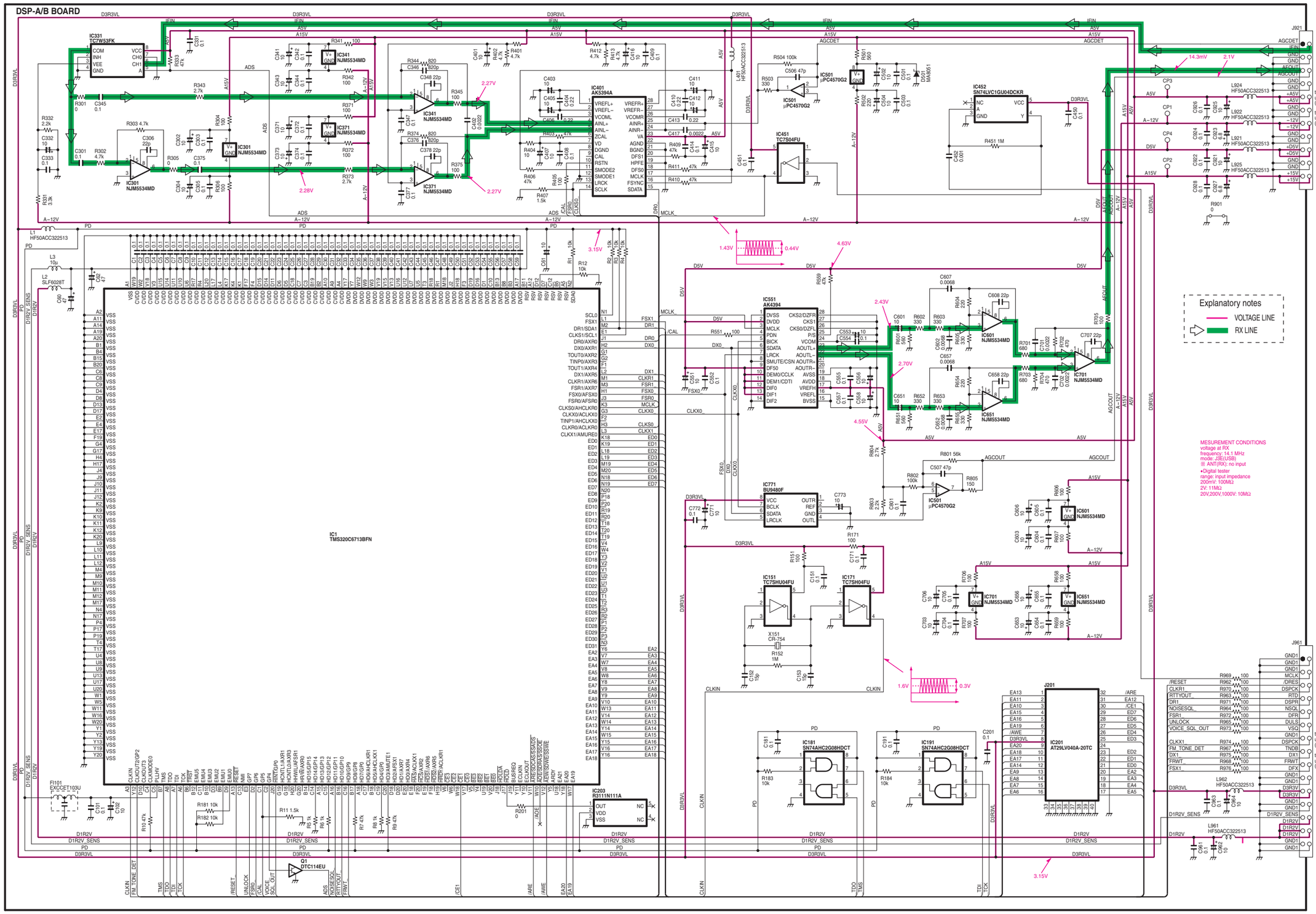

# DSP-TX BOARD

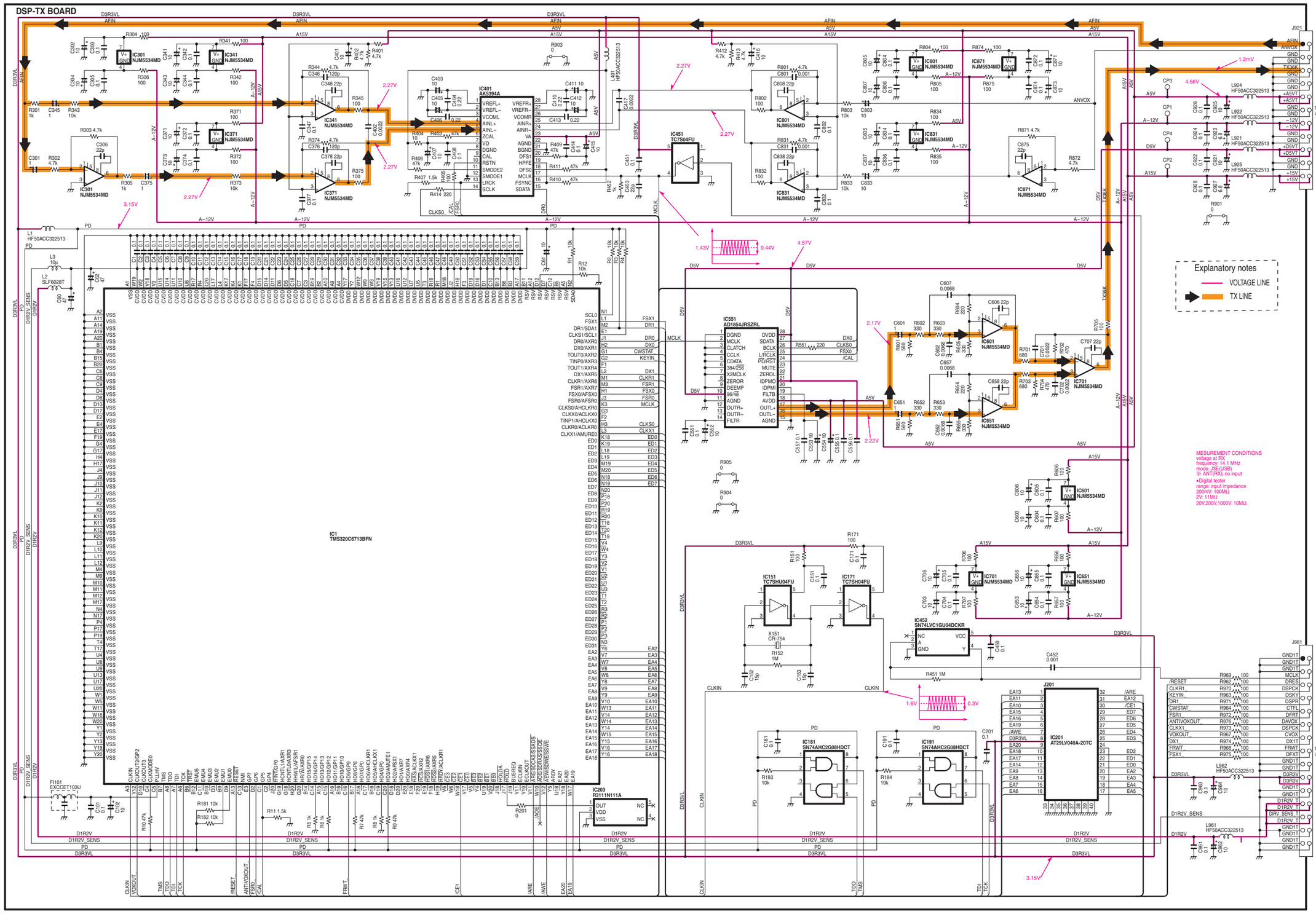
DSP-TX BOARD
IC1
TMS320C6713BFN
IC203
R3111N111A
IC301
NJM5534MD
IC341
NJM5534MD
IC371
NJM5534MD
IC401
AK5394A
IC451
TC7S04FU
IC551
AD1854JRSZRL
IC601
NJM5534MD
IC651
NJM5534MD
IC701
NJM5534MD
IC801
NJM5534MD
IC831
NJM5534MD
IC871
NJM5534MD
IC151
TC7SHU04FU
IC171
TC7SH04FU
IC181
SN74AHC2G08HDCT
IC191
SN74AHC2G08HDCT
IC201
AT29LV040A-20TC
IC452
SN74LVC1GU04DCKR
J201
J921
J961
to MAIN unit J380
to MAIN unit J381
Explanatory notes
VOLTAGE LINE
TX LINE
MESUREMENT CONDITIONS
voltage at RX
frequency: 14.1 MHz
mode: J3E(USB)
※ ANT(RX): no input
•Digital tester
range: input impedance
200mV: 100MΩ
2V: 11MΩ
20V,200V,1000V: 10MΩ

# SCOPE UNIT

## SCOPE UNIT (1)

| | MAIN | SUB |
|---|---|---|
| A | 6.46V | 0.0V |
| B | 0.0V | 6.47V |
| C | 0.0V | 5.68V |
| D | 5.68V | 0.0V |
| E | 2.29V | 14.55V |
| F | 14.55V | 2.28V |

Explanatory notes
VOLTAGE LINE

MESUREMENT CONDITIONS
voltage at RX(no instruction)
frequency: 14.1 MHz
mode: J3E(USB)
※ ANT(RX): no input
(TX): no modulation
SCOPE ATT: 0dB
•Digital tester
range: input impedance
200mV: 100MΩ
2V, 11MΩ
20V,200V,1000V: 10MΩ

## SCOPE UNIT (2)

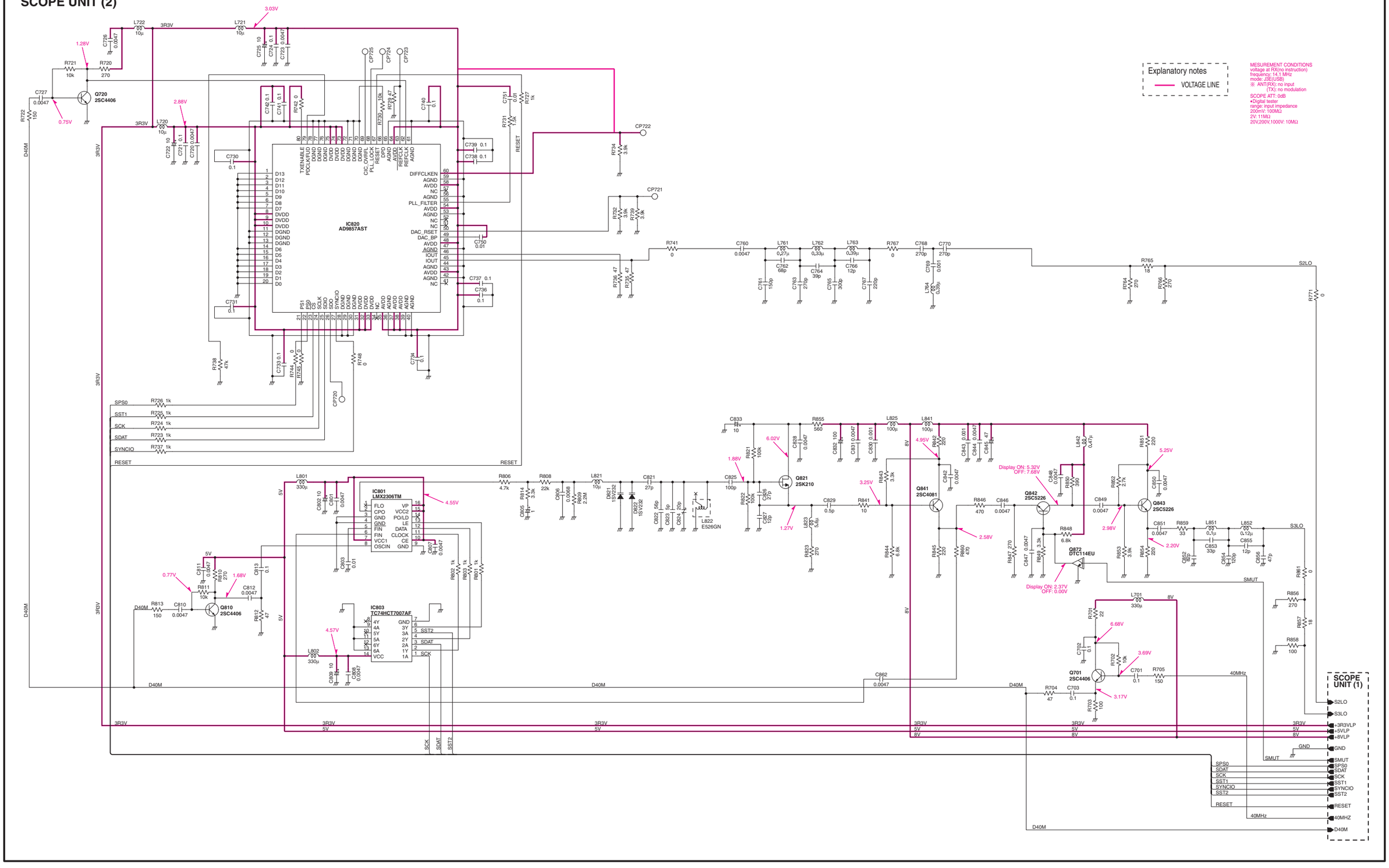
Explanatory notes
VOLTAGE LINE
MESUREMENT CONDITIONS
voltage at RX(no instruction)
frequency: 14.1 MHz
mode: J3E(USB)
※ ANT(RX): no input
(TX): no modulation
SCOPE ATT: 0dB
•Digital tester
range: input impedance
200mV: 100MΩ
2V: 11MΩ
20V,200V,1000V: 10MΩ
IC820
AD9857AST
IC801
LMX2306TM
IC803
TC74HCT7007AF
Q720
2SC4406
Q810
2SC4406
Q821
2SK210
Q841
2SC4081
Q842
2SC5226
Q843
2SC5226
Q872
DTC114EU
Q701
2SC4406
L822
E526GN
SCOPE
UNIT (1)
S2LO
S3LO
+3R3VLP
+5VLP
+8VLP
GND
SMUT
SPS0
SDAT
SCK
SST1
SYNCIO
SST2
RESET
40MHZ
D40M
Display ON: 5.32V
OFF: 7.68V
Display ON: 2.37V
OFF: 0.00V

## SCOPE UNIT (3)

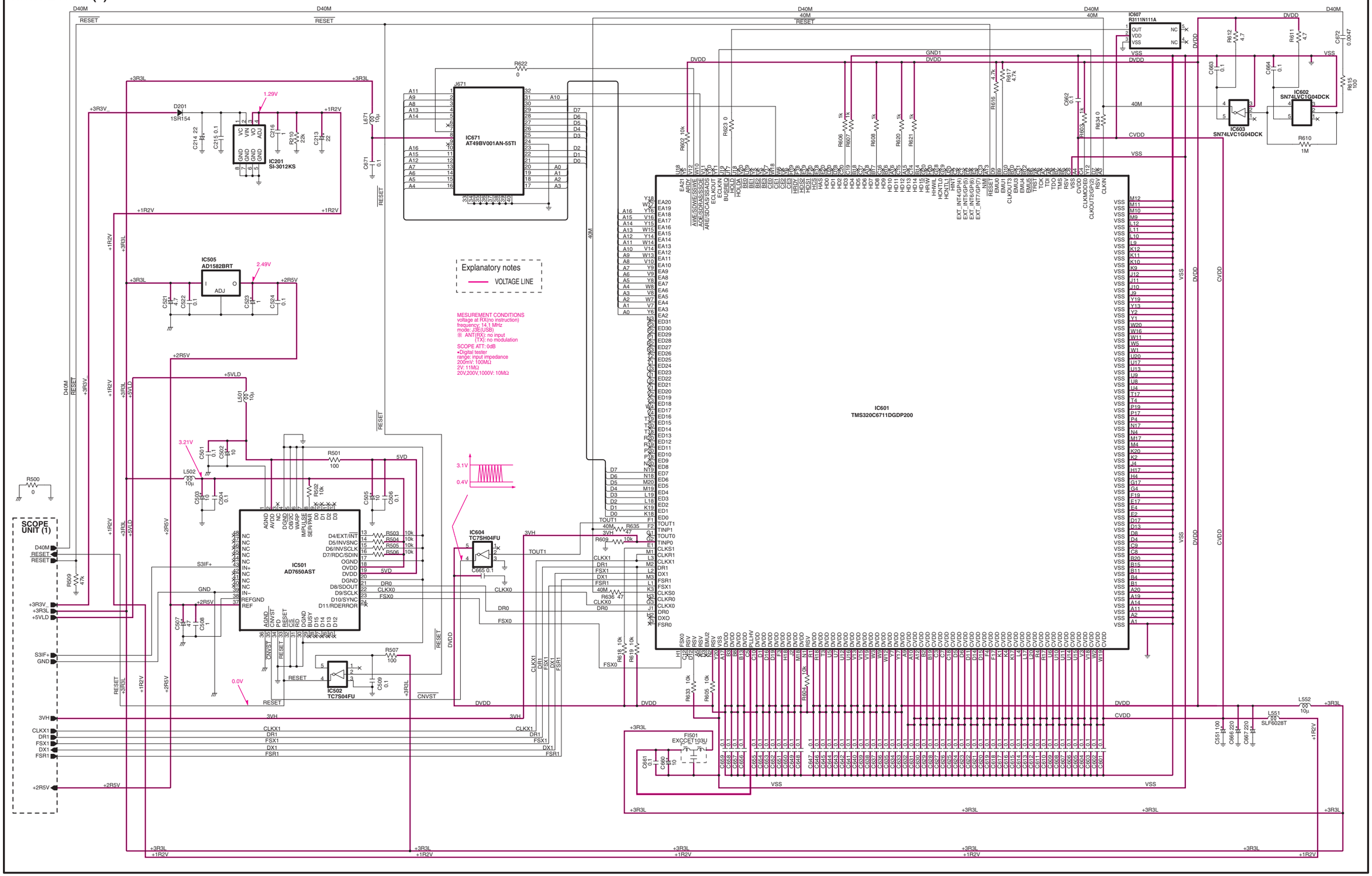

IC601
TMS320C6711DGDP200
IC501
AD7650AST
IC502
TC7S04FU
IC604
TC7SH04FU
IC505
AD1582BRT
IC201
SI-3012KS
IC671
AT49BV001AN-55TI
IC602
SN74LVC1G04DCK
IC603
SN74LVC1G04DCK
IC607
R3111N111A
FI501
EXCCET103U
SCOPE UNIT (1)
Explanatory notes
VOLTAGE LINE
MESUREMENT CONDITIONS
voltage at RX(no instruction)
frequency: 14.1 MHz
mode: J3E(USB)
※ ANT(RX): no input
(TX): no modulation
SCOPE ATT: 0dB
•Digital tester
range: input impedance
200mV: 100MΩ
2V: 11MΩ
20V,200V,1000V: 10MΩ

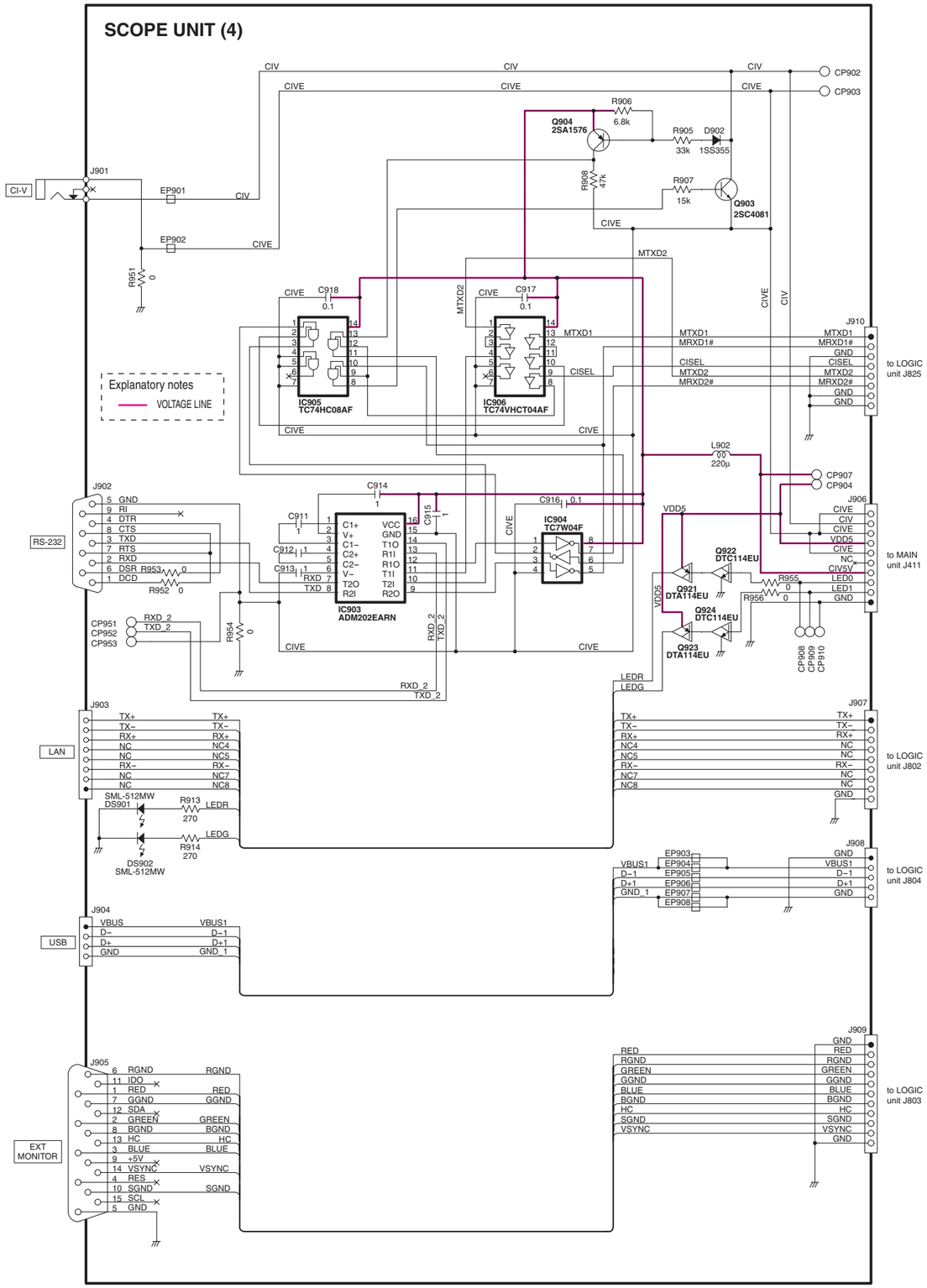
SCOPE UNIT (4)
Explanatory notes
VOLTAGE LINE
CI-V
J901
EP901
EP902
R951
0
CIV
CIVE
CP902
CP903
R906
6.8k
Q904
2SA1576
R905
33k
D902
1SS355
R908
47k
R907
15k
Q903
2SC4081
MTXD2
C918
0.1
C917
0.1
IC905
TC74HC08AF
IC906
TC74VHCT04AF
MTXD1
CISEL
J910
MTXD1
MRXD1#
GND
CISEL
MTXD2
MRXD2#
GND
GND
to LOGIC
unit J825
L902
220µ
CP907
CP904
J902
5 GND
9 RI
4 DTR
8 CTS
3 TXD
7 RTS
2 RXD
6 DSR
1 DCD
RS-232
R953
0
R952
0
C914
1
C911
1
C912
1
C913
1
C915
1
C916
0.1
IC904
TC7W04F
IC903
ADM202EARN
C1+
V+
C1−
C2+
C2−
V−
T2O
R2I
VCC
GND
T1O
R1I
R1O
T1I
T2I
R2O
RXD
TXD
VDD5
Q922
DTC114EU
Q921
DTA114EU
Q924
DTC114EU
Q923
DTA114EU
R955
0
R956
0
J906
CIVE
CIV
CIVE
VDD5
CIVE
NC
CIV5V
LED0
LED1
GND
to MAIN
unit J411
CP908
CP909
CP910
CP951
CP952
CP953
RXD_2
TXD_2
R954
0
LEDR
LEDG
J903
LAN
TX+
TX−
RX+
NC
NC
RX−
NC
NC
TX+
TX−
RX+
NC4
NC5
RX−
NC7
NC8
SML-512MW
DS901
R913
270
LEDR
LEDG
R914
270
DS902
SML-512MW
J907
TX+
TX−
RX+
NC4
NC5
RX−
NC7
NC8
TX+
TX−
RX+
NC
NC
RX−
NC
NC
GND
to LOGIC
unit J802
J908
VBUS1
D−1
D+1
GND_1
EP903
EP904
EP905
EP906
EP907
EP908
GND
VBUS1
D−1
D+1
GND
to LOGIC
unit J804
J904
USB
VBUS
D−
D+
GND
VBUS1
D−1
D+1
GND_1
J909
RED
RGND
GREEN
GGND
BLUE
BGND
HC
SGND
VSYNC
GND
to LOGIC
unit J803
J905
EXT
MONITOR
6 RGND
11 IDO
1 RED
7 GGND
12 SDA
2 GREEN
8 BGND
13 HC
3 BLUE
9 +5V
14 VSYNC
4 RES
10 SGND
15 SCL
5 GND
RGND
RED
GGND
GREEN
BGND
HC
BLUE
VSYNC
SGND

# RXPLL-A/RXPLL-B UNITS

## RXPLL-A/B UNIT (1)

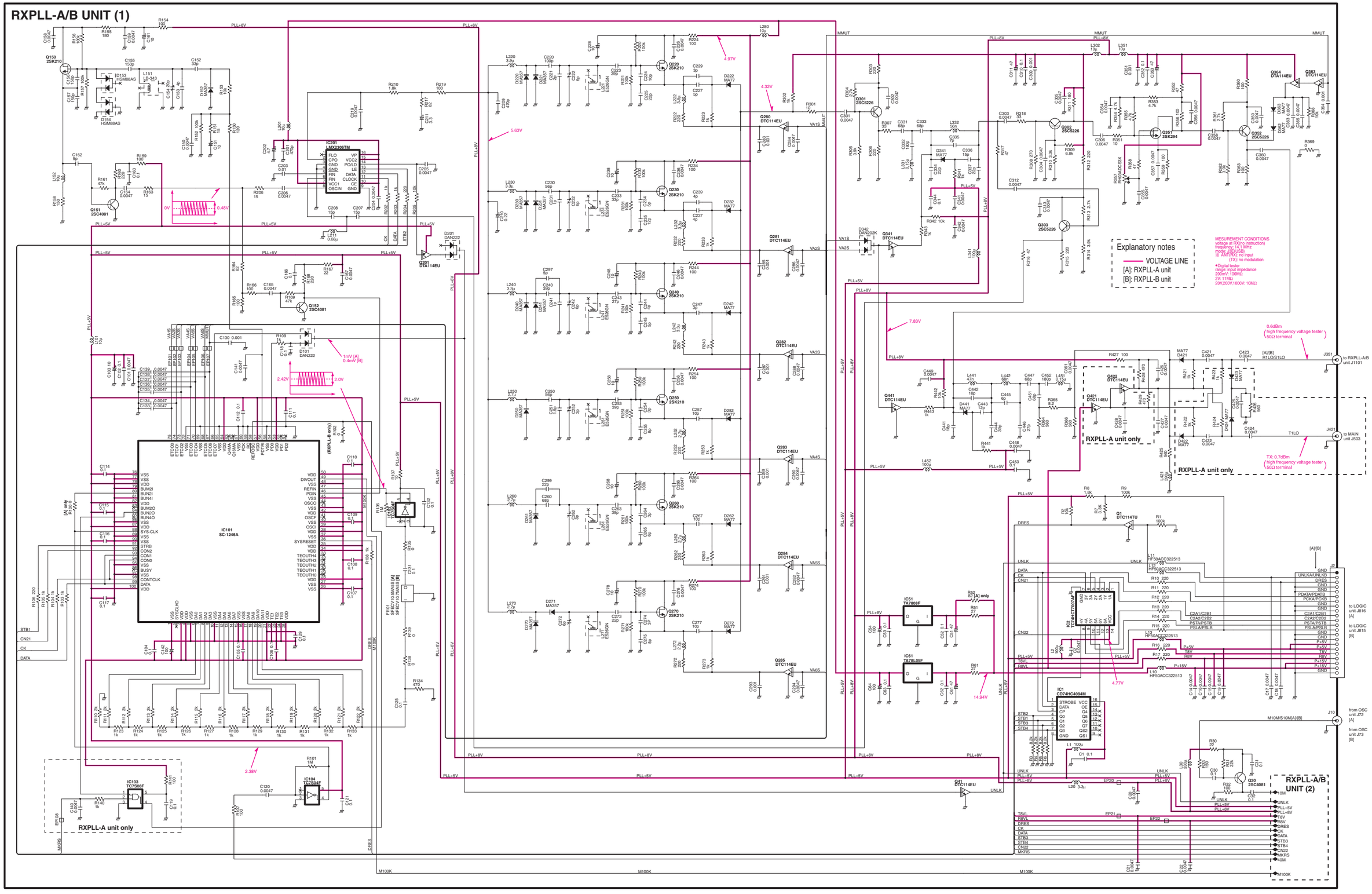
IC101 SC-1246A
IC201 LMX2306TM
IC103 TC7S08F
IC104 TC7S04F
IC1 CD74HC4094M
IC2 TC74HCT7007AF
IC51 TA7808F
IC61 TA78L05F
Q150 2SK210
Q151 2SC4081
Q152 2SC4081
Q220 2SK210
Q230 2SK210
Q240 2SK210
Q250 2SK210
Q260 2SK210
Q270 2SK210
Q280 DTC114EU
Q281 DTC114EU
Q282 DTC114EU
Q283 DTC114EU
Q284 DTC114EU
Q285 DTC114EU
Q301 2SC5226
Q302 2SC5226
Q303 2SC5226
Q341 DTC114EU
Q351 3SK294
Q352 2SC5226
Q354 DTA114EU
Q363 DTC114EU
Q421 DTC114EU
Q422 DTC114EU
Q441 DTC114EU
Q30 2SC4081
Q41 DTC114EU
Q1 DTC114TU
D101 DAN222
D201 DAN222
D342 DAN202K
D221 MA357
D241 MA357
D261 MA357
D271 MA357
D221 MA157
D241 MA157
D261 MA157
D271 MA157
D222 MA77
D232 MA77
D242 MA77
D252 MA77
D262 MA77
D272 MA77
D301 MA77
D341 MA77
D411 MA77
D421 MA77
D422 MA77
D423 MA77
D424 MA77
D425 MA77
D426 MA77
D427 MA77
D351 1SV307
D352 1SV307
D353 1SV307
D354 1SV307
D355 1SV307
D356 1SV307
D357 1SV307
D358 1SV307
D359 1SV307
D360 1SV307
D361 1SV307
D362 1SV307
D363 1SV307
D364 1SV307
D365 1SV307
D366 1SV307
D367 1SV307
D368 1SV307
D369 1SV307
D370 1SV307

## RXPLL-A/B UNIT (2)

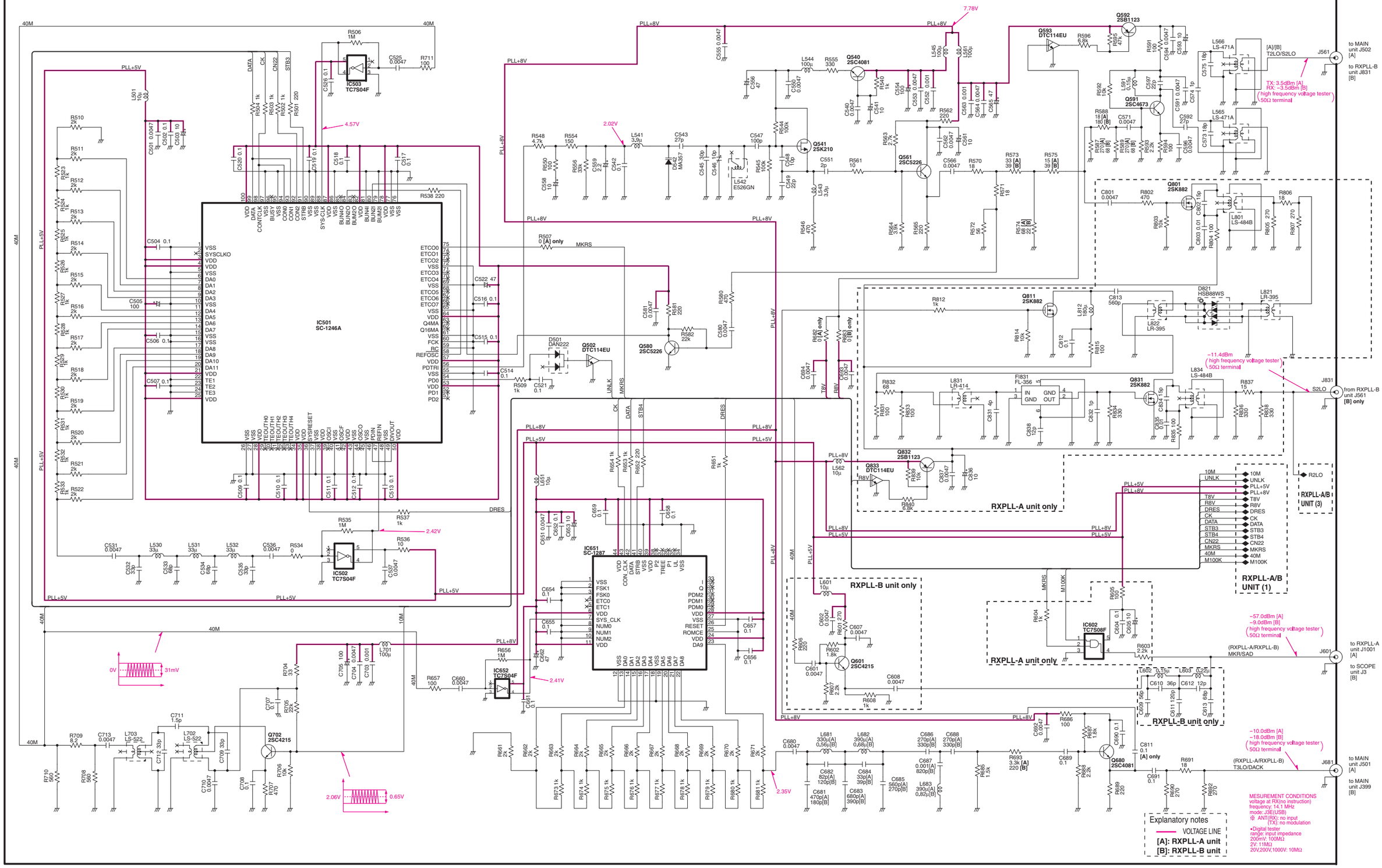

# RXPLL-A/B UNIT (3)

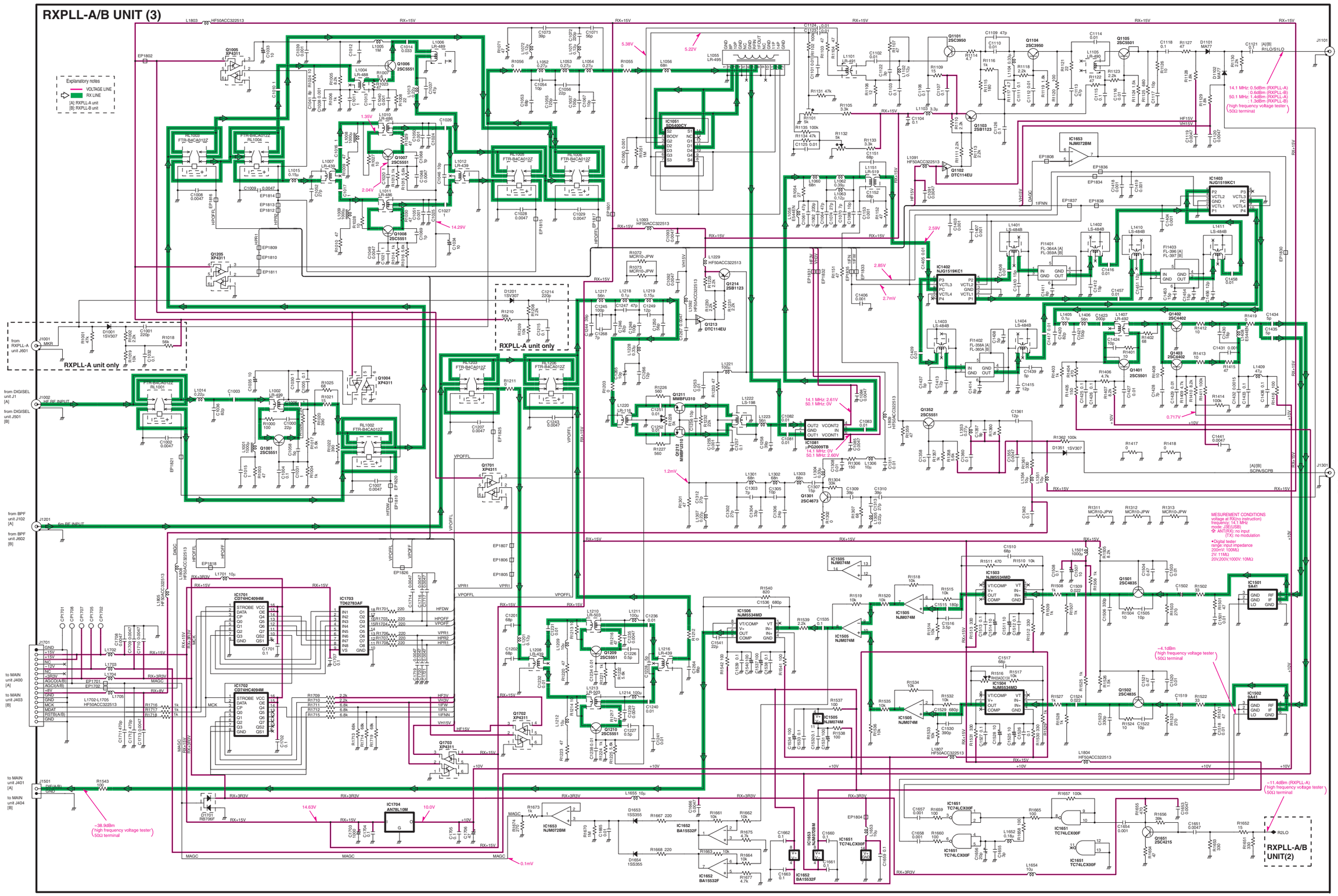

# DIGISEL UNIT

## DIGISEL UNIT (A)

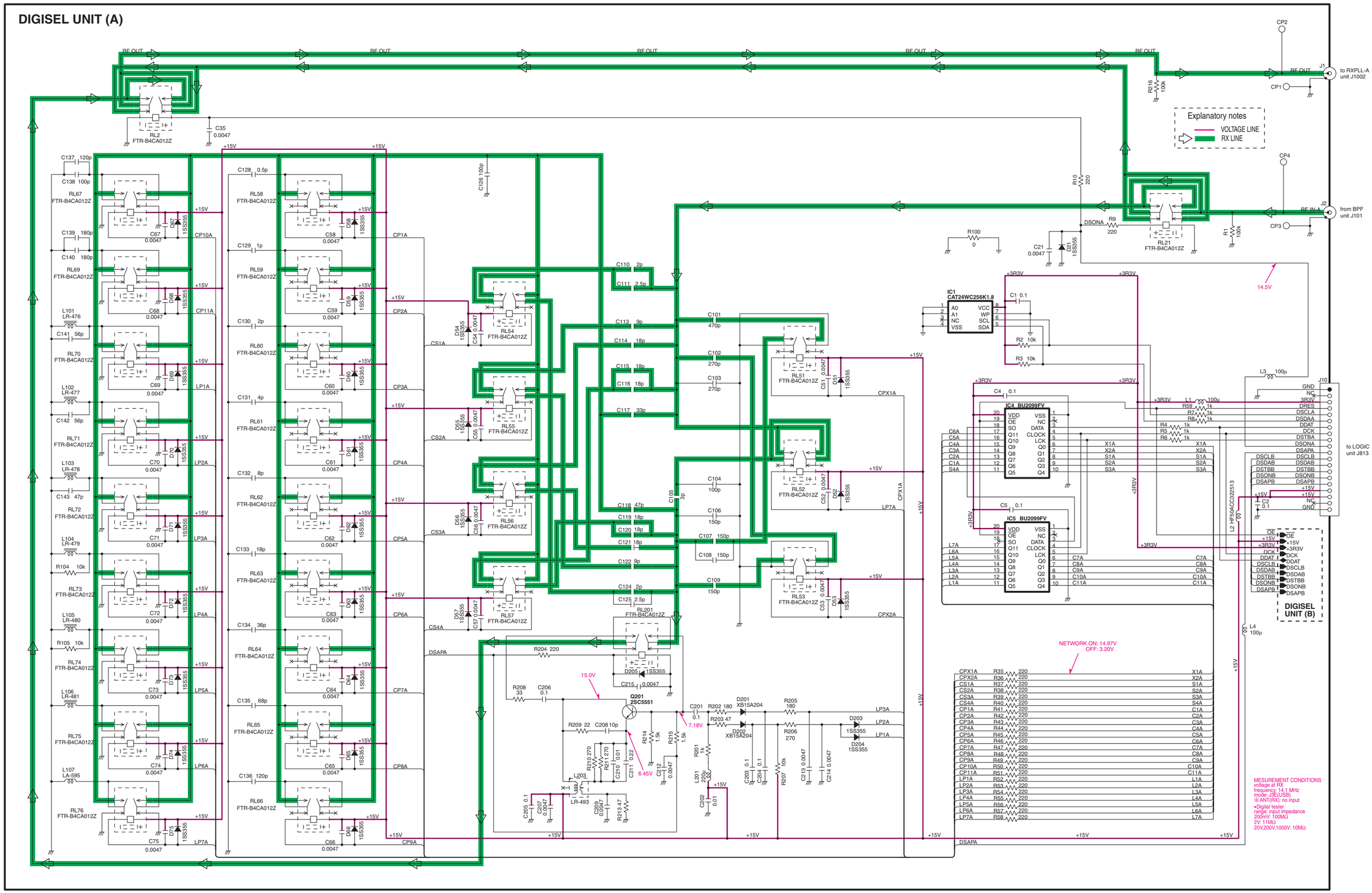

## DIGISEL UNIT (B)

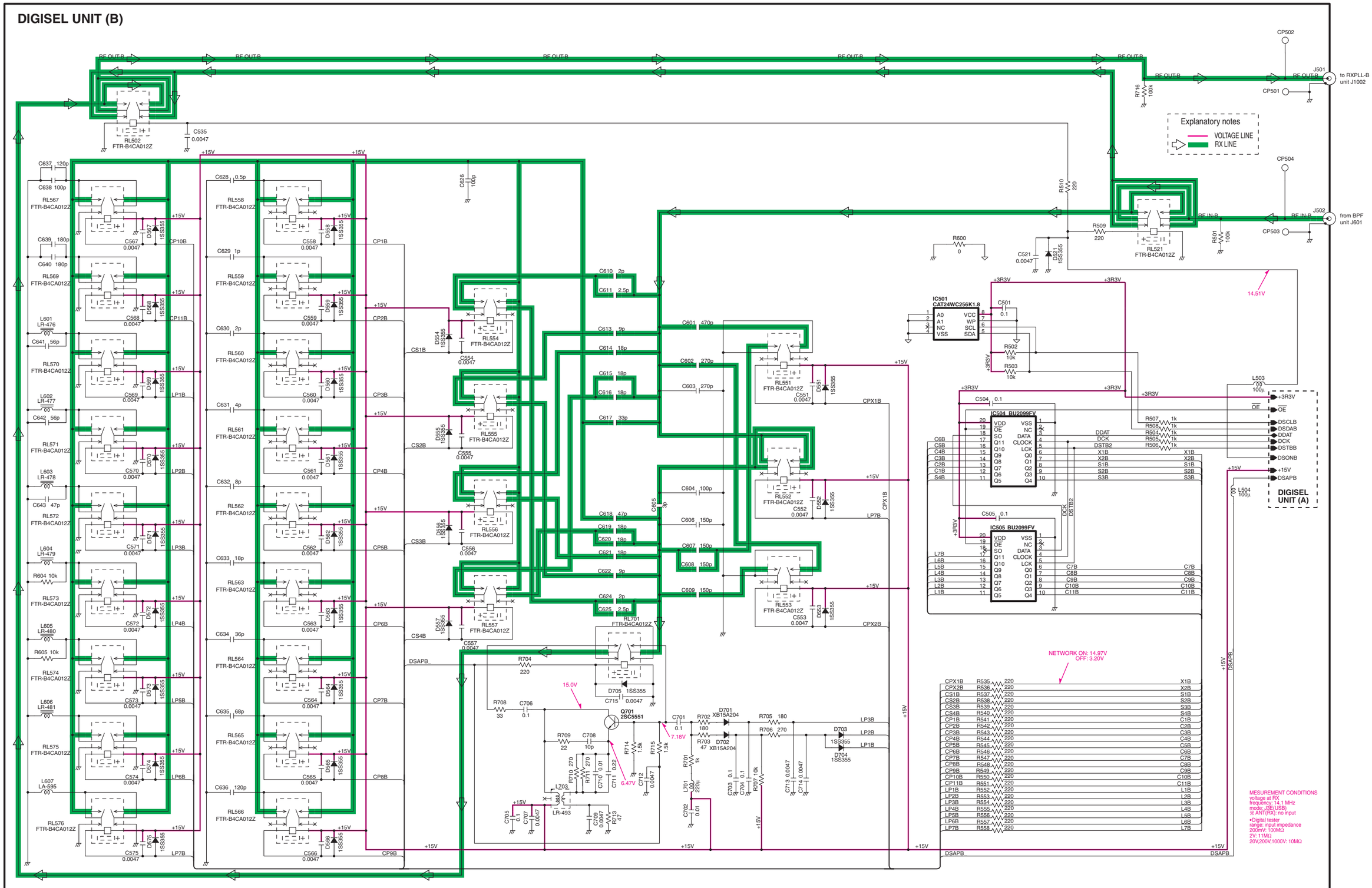

# OSC UNIT

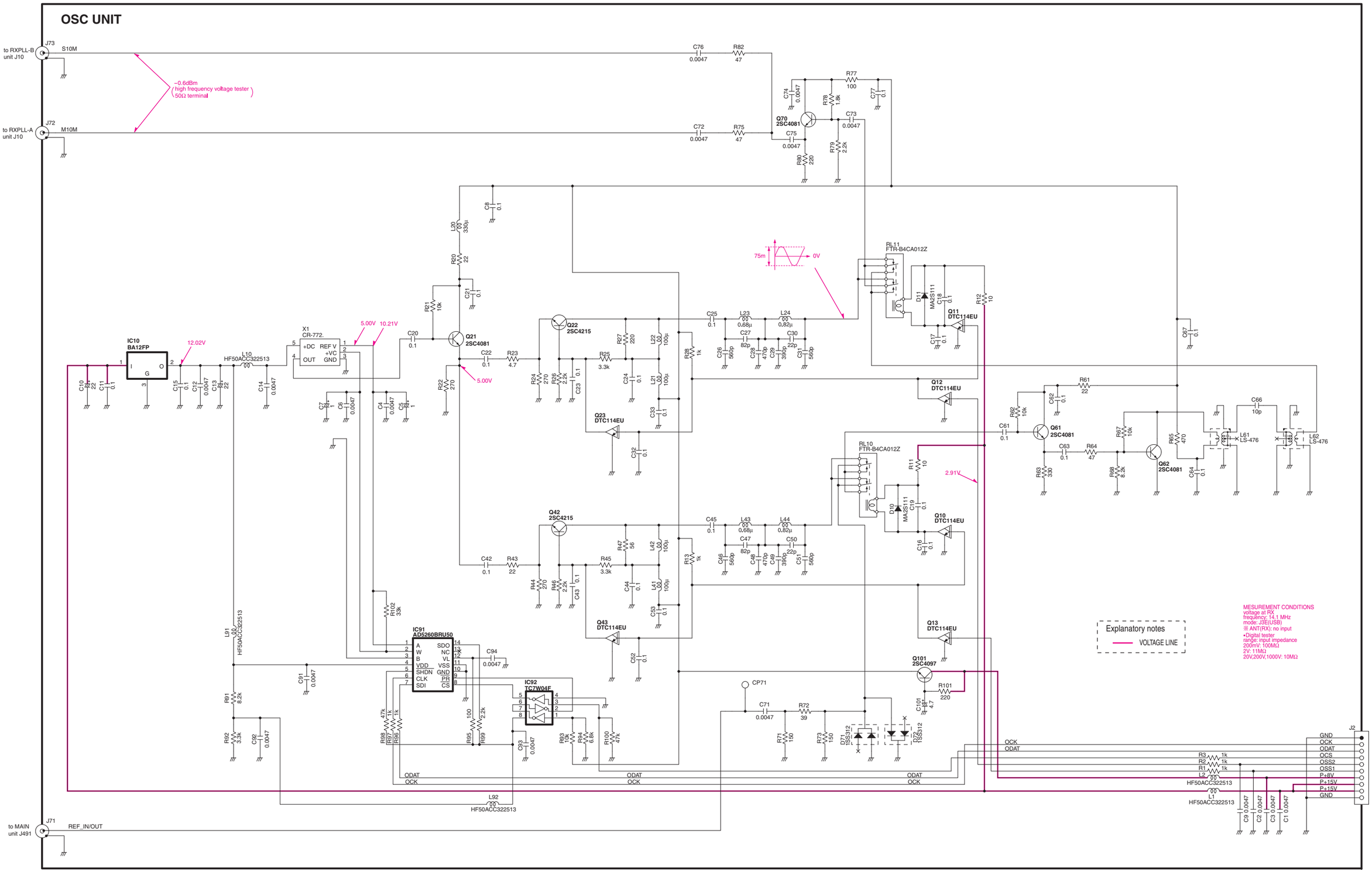
OSC UNIT
to RXPLL-B unit J10
J73
S10M
~0.6dBm
(high frequency voltage tester
50Ω terminal)
to RXPLL-A unit J10
J72
M10M
C76 0.0047
R82 47
C72 0.0047
R75 47
Q70 2SC4081
C74 0.0047
R78 1.8k
R77 100
C77 0.1
C73 0.0047
C75 0.0047
R79 2.2k
R80 220
C8 0.1
L20 330µ
R20 22
C21 0.1
R21 10k
75m
0V
RL11 FTR-B4CA012Z
D11 MA2S111
C18 0.1
R12 10
Q11 DTC114EU
C17 0.1
C67 0.1
IC10 BA12FP
12.02V
L10 HF50ACC322513
X1 CR-772.
5.00V
10.21V
C20 0.1
Q21 2SC4081
C22 0.1
R23 4.7
5.00V
R22 270
Q22 2SC4215
R25 3.3k
R27 220
L22 100µ
R28 1k
C25 0.1
L23 0.68µ
L24 0.82µ
C27 82p
C30 22p
C26 560p
C28 470p
C29 390p
C31 560p
Q12 DTC114EU
R61 22
C62 0.1
R62 10k
C61 0.1
Q61 2SC4081
C63 0.1
R64 47
R63 330
R67 10k
R65 470
Q62 2SC4081
R68 8.2k
C64 0.1
C66 10p
L61 LS-476
L62 LS-476
Q23 DTC114EU
C24 0.1
L21 100µ
C33 0.1
C32 0.1
RL10 FTR-B4CA012Z
2.91V
R11 10
D10 MA2S111
C19 0.1
Q10 DTC114EU
C16 0.1
Q42 2SC4215
C42 0.1
R43 22
R45 3.3k
R47 56
L42 100µ
R13 1k
C45 0.1
L43 0.68µ
L44 0.82µ
C47 82p
C50 22p
C46 560p
C48 470p
C49 390p
C51 560p
Q43 DTC114EU
C44 0.1
L41 100µ
C53 0.1
C52 0.1
Q13 DTC114EU
R102 33k
L91 HF50ACC322513
IC91 AD5260BRU50
C94 0.0047
C91 0.0047
R91 8.2k
R92 3.3k
C92 0.0047
IC92 TC7W04F
R98 47k
R97 1k
R96 1k
R95 100
R99 2.2k
C93 0.0047
R93 10k
R94 6.8k
R100 47k
CP71
C71 0.0047
R72 39
R71 150
R73 150
D71 1SS312
D72 1SS312
Q101 2SC4097
R101 220
C101 4.7
ODAT
OCK
L92 HF50ACC322513
to MAIN unit J491
J71
REF_IN/OUT
OCK
ODAT
R3 1k
R2 1k
R1 1k
L2 HF50ACC322513
L1 HF50ACC322513
J2
GND
OCK
ODAT
OCS
OSS2
OSS1
P+8V
P+15V
P-15V
GND
to LOGIC unit J814
C9 0.0047
C2 0.0047
C3 0.0047
C1 0.0047
Explanatory notes
VOLTAGE LINE
MESUREMENT CONDITIONS
voltage at RX
frequency: 14.1 MHz
mode: J3E(USB)
※ ANT(RX): no input
•Digital tester
range: input impedance
200mV: 100MΩ
2V: 11MΩ
20V,200V,1000V: 10MΩ

# ANT-SW UNIT

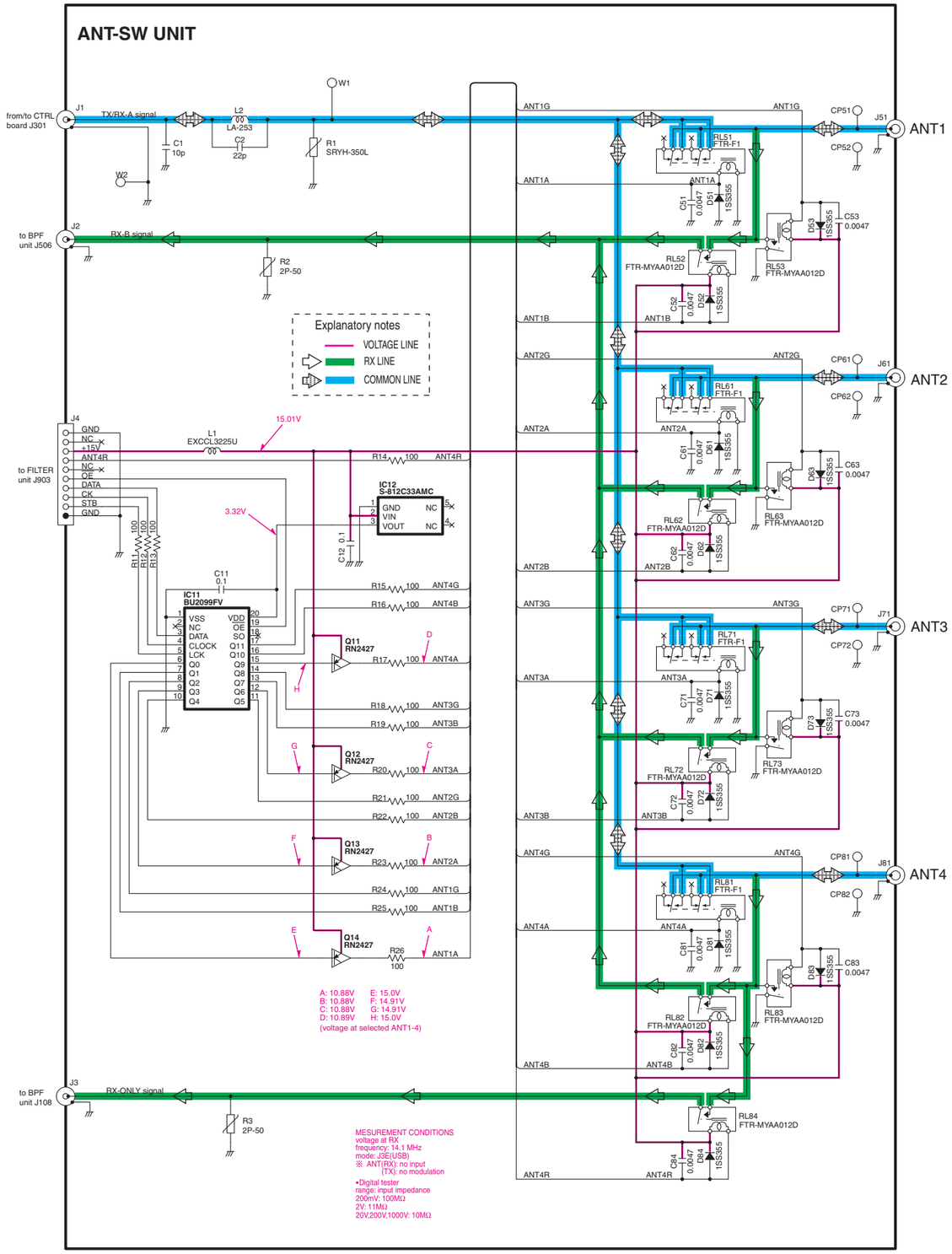


# FILTER UNIT

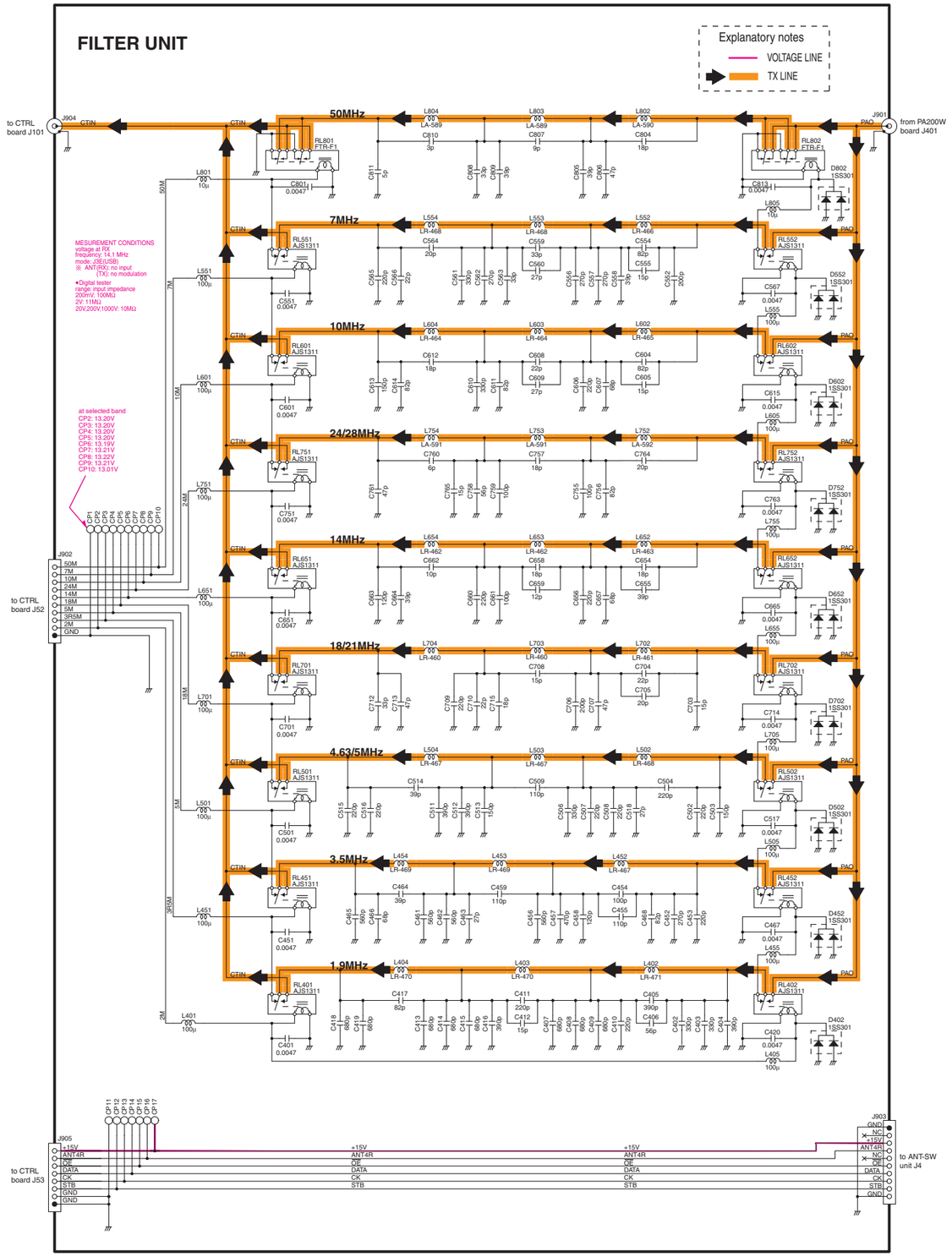

# BPF UNIT

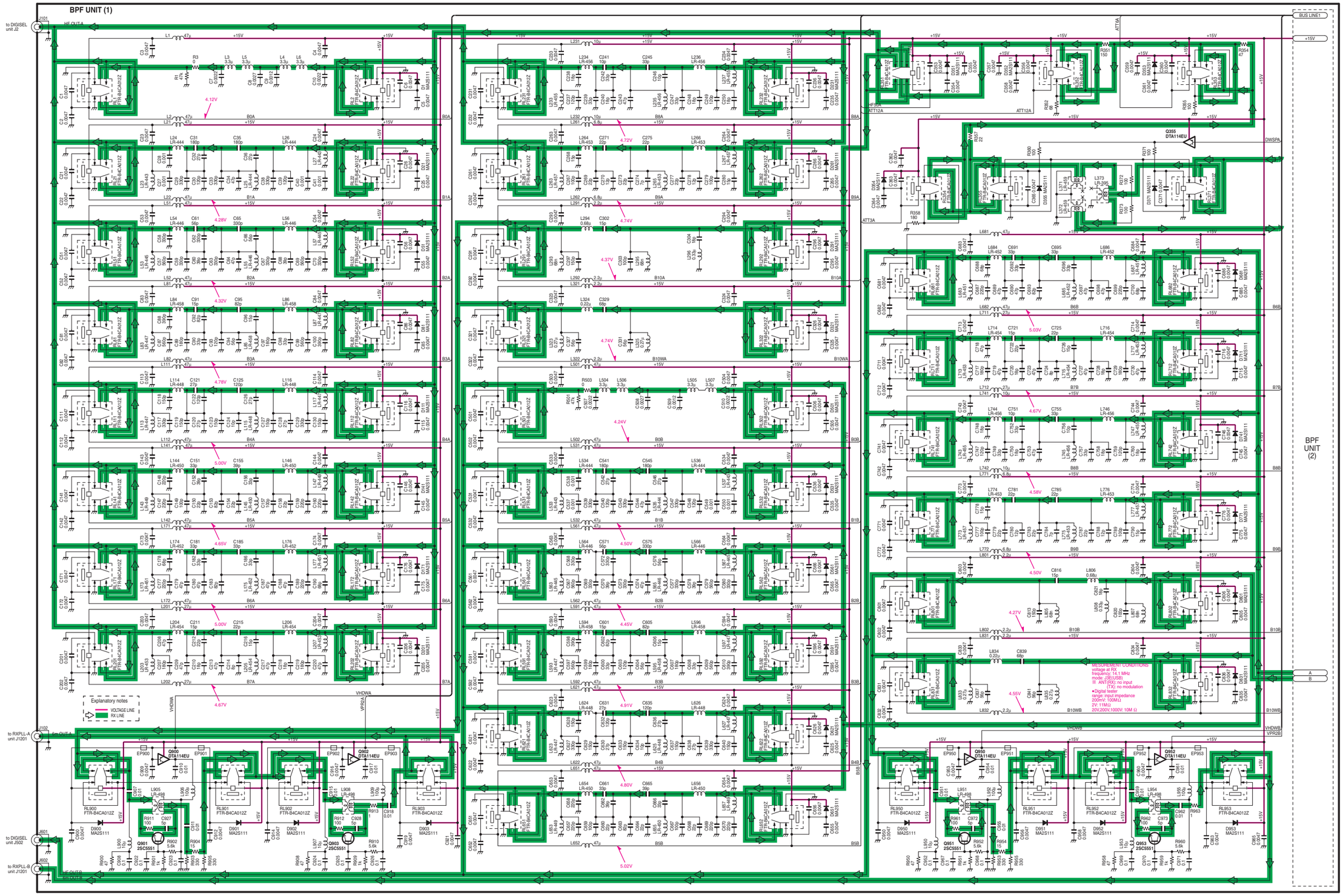
BPF UNIT (1)
BPF UNIT (2)
Explanatory notes
VOLTAGE LINE
RX LINE
MESUREMENT CONDITIONS
voltage at RX
frequency: 14.1 MHz
mode: J3E(USB)
※ ANT(RX): no input
(TX): no modulation
• Digital tester
range: input impedance
200mV: 100MΩ
2V: 11MΩ
20V,200V,1000V: 10M Ω

# NETWORK BOARD

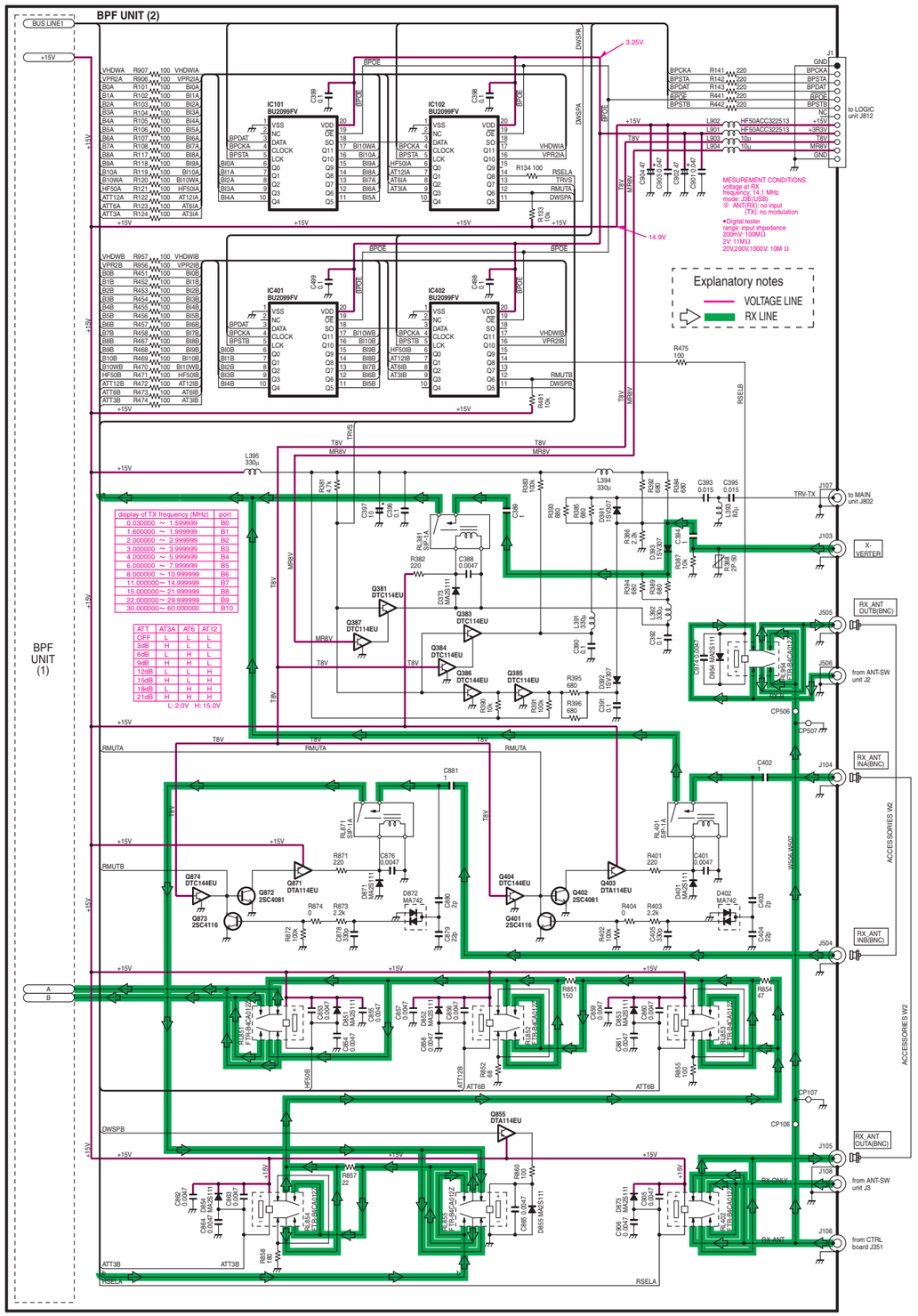


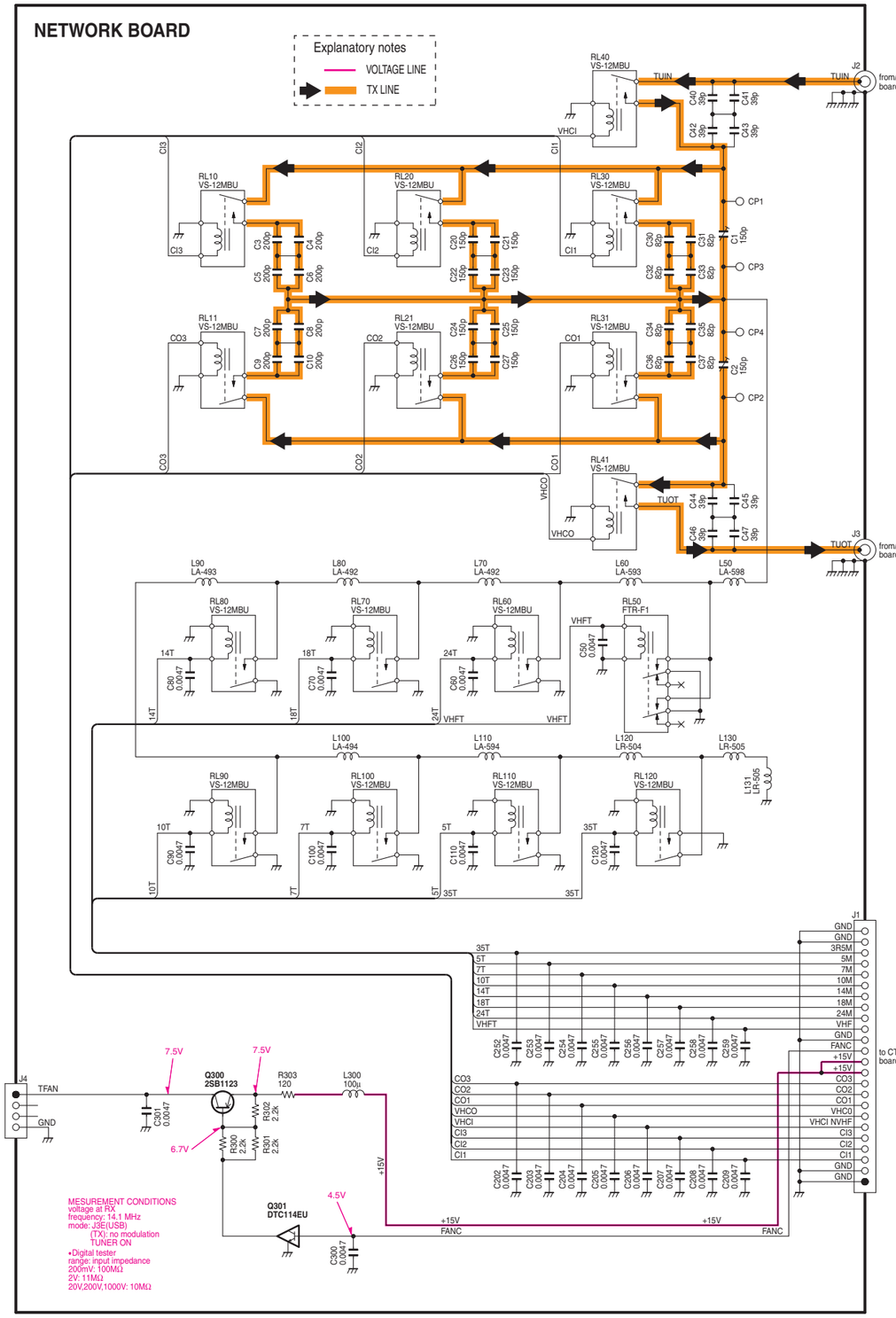

# CTRL BOARD

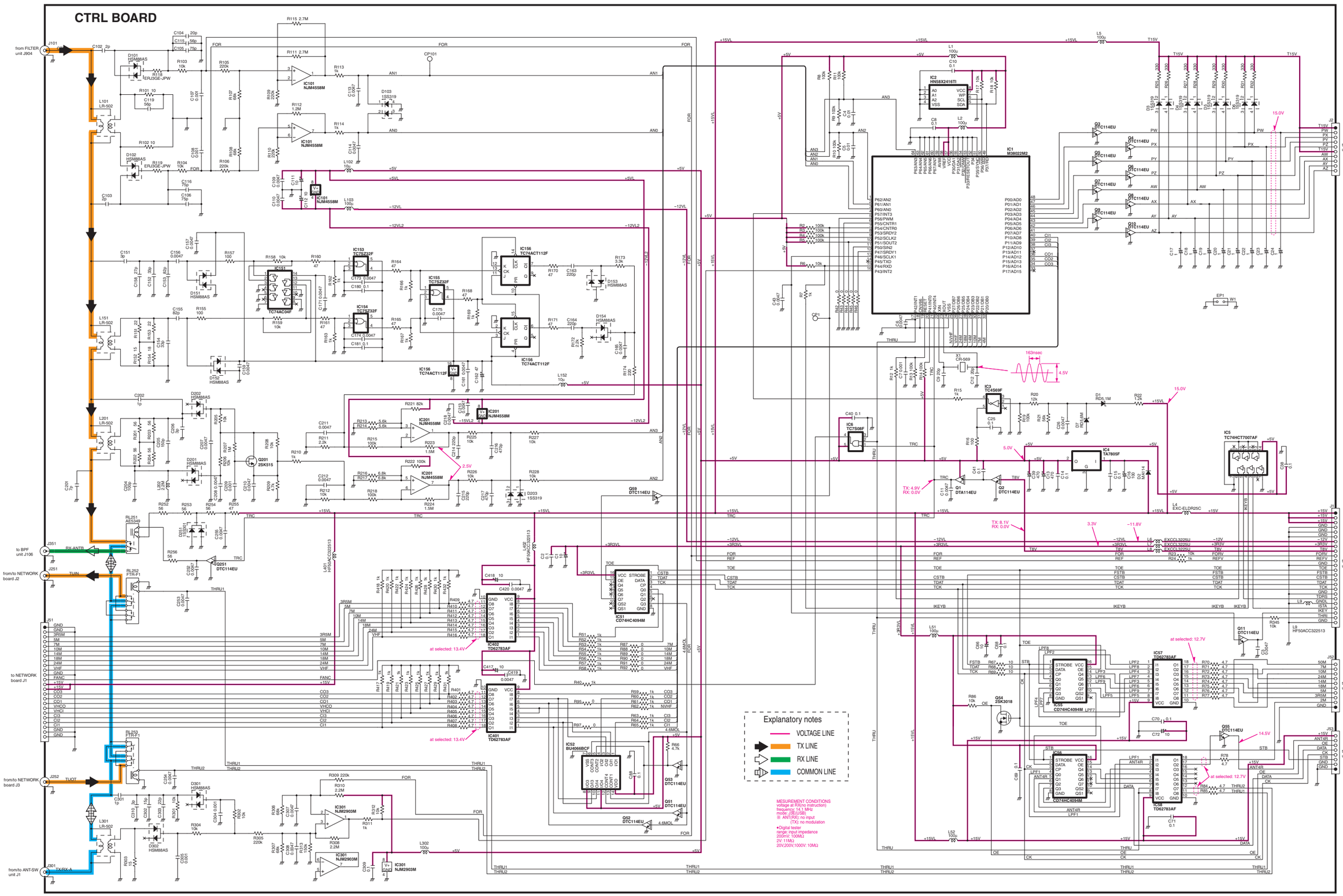
CTRL BOARD
Explanatory notes
VOLTAGE LINE
TX LINE
RX LINE
COMMON LINE
MESUREMENT CONDITIONS
voltage at RX(no instruction)
frequency: 14.1 MHz
mode: J3E(USB)
※ ANT(RX): no input
(TX): no modulation
•Digital tester
range: input impedance
200mV: 100MΩ
2V: 11MΩ
20V,200V,1000V: 10MΩ

# PA200W BOARD

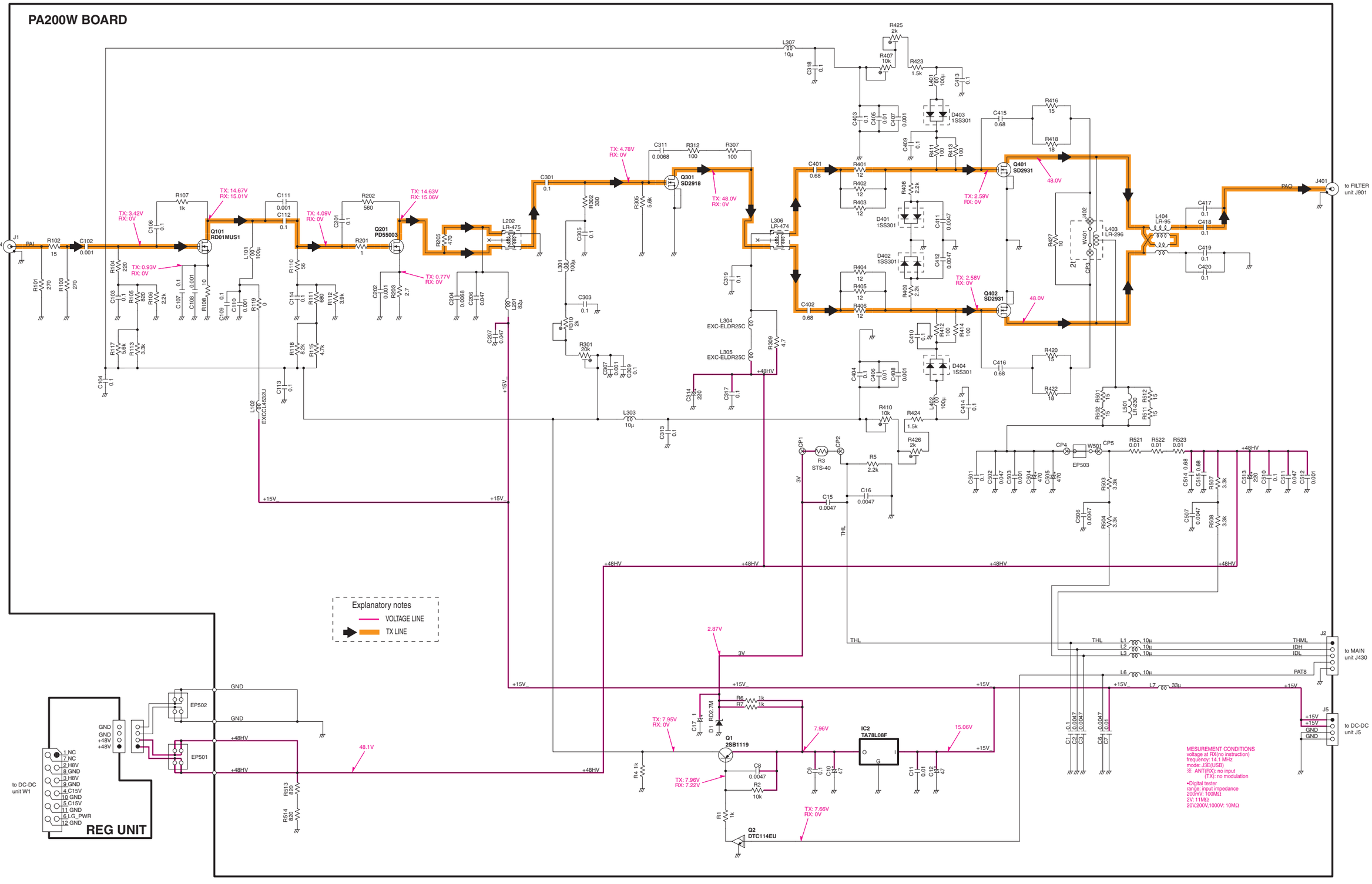

# DC-DC UNIT

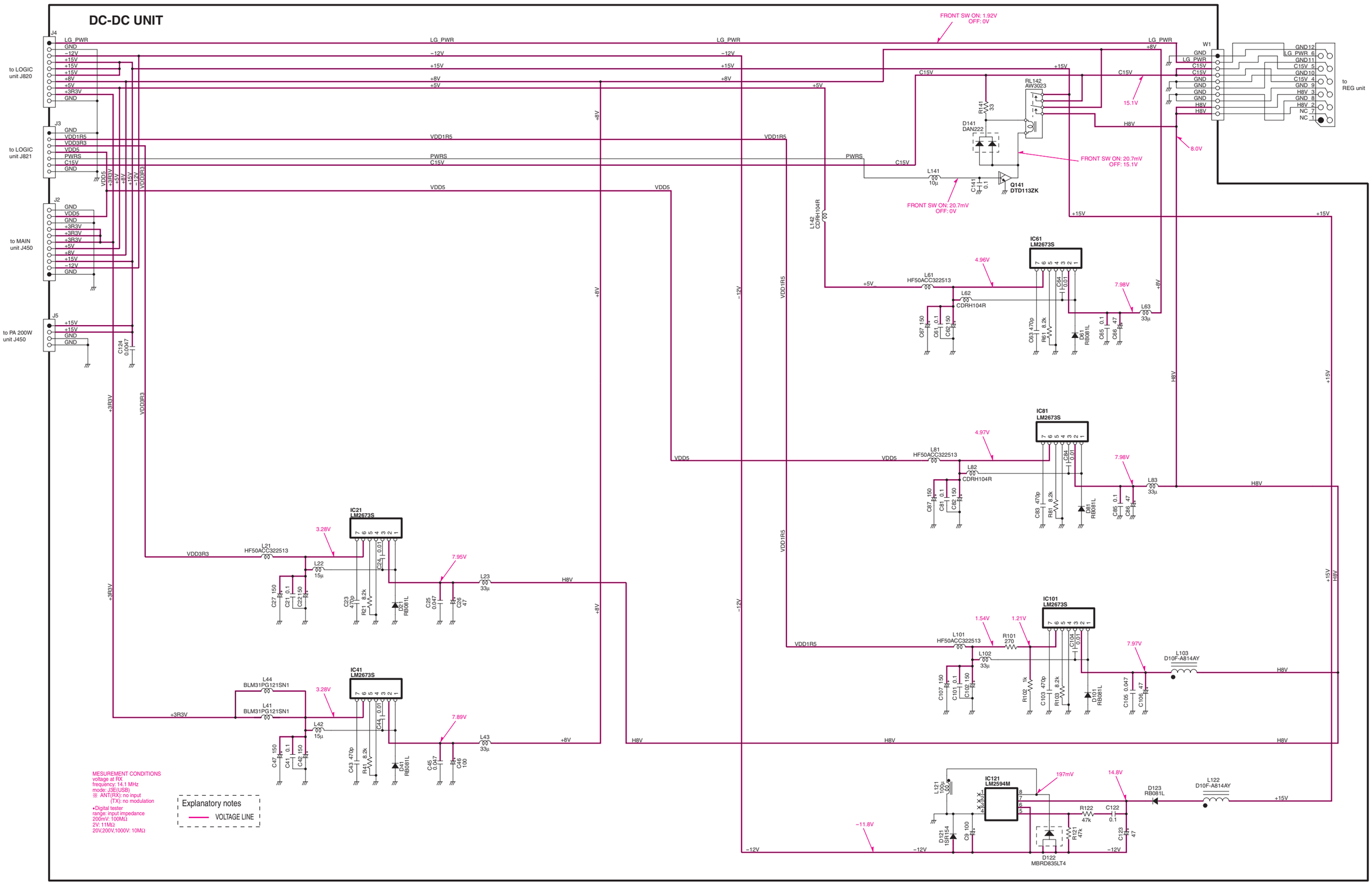
DC-DC UNIT
J4
LG_PWR
GND
−12V
+15V
+15V
+8V
+5V
+3R3V
GND
to LOGIC unit J820
J3
GND
VDD1R5
VDD3R3
VDD5
PWRS
C15V
GND
to LOGIC unit J821
J2
GND
VDD5
GND
+3R3V
+3R3V
+5V
+8V
+15V
−12V
GND
to MAIN unit J450
J5
+15V
+15V
GND
GND
to PA 200W unit J450
C124 0.047
+3R3V
VDD3R3
LG_PWR
−12V
+15V
+8V
+5V
VDD1R5
PWRS
C15V
VDD5
+8V
−12V
VDD1R5
FRONT SW ON: 1.92V
OFF: 0V
+8V
C15V
+15V
C15V
15.1V
RL142
AW3023
R141
33
D141
DAN222
H8V
8.0V
FRONT SW ON: 20.7mV
OFF: 15.1V
L141
10µ
C141
0.1
Q141
DTD113ZK
FRONT SW ON: 20.7mV
OFF: 0V
L142
CDRH104R
+15V
+15V
W1
GND 12
LG_PWR 6
GND 11
C15V 5
GND 10
C15V 4
GND 9
H8V 3
GND 8
H8V 2
NC 7
NC 1
to REG unit
IC61
LM2673S
4.96V
7.98V
L61
HF50ACC322513
L62
CDRH104R
L63
33µ
+5V
+8V
C64 0.01
C67 150
C61 0.1
C62 150
C63 470p
R61 8.2k
D61 RB081L
C65 0.1
C66 47
H8V
+15V
IC81
LM2673S
4.97V
7.98V
L81
HF50ACC322513
L82
CDRH104R
L83
33µ
VDD5
VDD5
VDD1R5
H8V
C84 0.01
C87 150
C81 0.1
C82 150
C83 470p
R81 8.2k
D81 RB081L
C85 0.1
C86 47
+15V
H8V
IC21
LM2673S
3.28V
7.95V
L21
HF50ACC322513
L22
15µ
L23
33µ
VDD3R3
H8V
C24 0.01
C27 150
C21 0.1
C22 150
C23 470p
R21 8.2k
D21 RB081L
C25 0.047
C26 47
+3R3V
+8V
IC101
LM2673S
1.54V
1.21V
7.97V
L101
HF50ACC322513
R101
270
L102
33µ
L103
D10F-A814AY
VDD1R5
H8V
C104 0.01
C107 150
C101 0.1
C102 150
R102 1k
C103 470p
R103 8.2k
D101 RB081L
C105 0.047
C106 47
IC41
LM2673S
3.28V
7.89V
L44
BLM31PG121SN1
L41
BLM31PG121SN1
L42
15µ
L43
33µ
+3R3V
+8V
H8V
C44 0.01
C47 150
C41 0.1
C42 150
C43 470p
R41 8.2k
D41 RB081L
C45 0.047
C46 100
H8V
−12V
IC121
LM2594M
197mV
14.8V
L121
100µ
D123
RB081L
L122
D10F-A814AY
+15V
R122
47k
C122
0.1
R121
47k
C123
47
D121
1SR154
C9 100
−11.8V
−12V
−12V
−12V
D122
MBRD835LT4
MESUREMENT CONDITIONS
voltage at RX
frequency: 14.1 MHz
mode: J3E(USB)
※ ANT(RX): no input
(TX): no modulation
•Digital tester
range: input impedance
200mV: 100MΩ
2V: 11MΩ
20V,200V,1000V: 10MΩ
Explanatory notes
VOLTAGE LINE

Jul. 2008

# SERVICE MANUAL ADDENDUM

## IC-7800

**CONTENTS**

PARTS LIST . . . . . 1
BOARD LAYOUTS . . . . . 57
VOLTAGE DIAGRAM . . . . . 59

# PARTS LIST

## [REPLACEMENT UNITS]

| ORDER NO. | UNIT NAME |
|---|---|
| 0325900101 | U 7800 BPF |
| 0325900102 | U 7800 RXPLL-A |
| 0325900103 | U 7800 RXPLL-B |
| 0325900104 | U 7800 FILTER |
| 0325900105 | U 7800 DIDSEL |
| 0325900106 | U 7800 DC-DC |
| 0325900107 | U 7800 OSC |
| 0325900108 | U 7800 PA |
| 0325900109 | U 7800 TUNER |
| 0325900110 | U 7800 FRONT |

## [VR-A BOARD]

| REF NO. | ORDER NO. | DESCRIPTION | | M. | H/V LOCATION |
|---|---|---|---|---|---|
| R1 | 7210002890 | VAR | RK161221005J/RV-308 | | |
| R2 | 7210002890 | VAR | RK161221005J/RV-308 | | |
| R3 | 7210002890 | VAR | RK161221005J/RV-308 | | |
| R4 | 7210002890 | VAR | RK161221005J/RV-308 | | |
| R11 | 7030003520 | S.RES | ERJ3GEYJ 472 V (4.7 k) | B | 44.6/27 |
| R12 | 7030003520 | S.RES | ERJ3GEYJ 472 V (4.7 k) | B | 44.6/25.7 |
| R13 | 7030003520 | S.RES | ERJ3GEYJ 472 V (4.7 k) | B | 59.4/29.9 |
| R14 | 7030003520 | S.RES | ERJ3GEYJ 472 V (4.7 k) | B | 44.6/24.4 |
| R15 | 7030003520 | S.RES | ERJ3GEYJ 472 V (4.7 k) | B | 44.6/21.8 |
| R16 | 7030003520 | S.RES | ERJ3GEYJ 472 V (4.7 k) | B | 44.6/23.1 |
| R17 | 7030003520 | S.RES | ERJ3GEYJ 472 V (4.7 k) | B | 63.2/9.5 |
| R18 | 7030003520 | S.RES | ERJ3GEYJ 472 V (4.7 k) | B | 44.6/20.5 |
| R21 | 7030003860 | S.RES | ERJ3GE JPW V | B | 49.7/41.4 |
| R22 | 7030003860 | S.RES | ERJ3GE JPW V | B | 52.3/42.4 |
| R23 | 7030003860 | S.RES | ERJ3GE JPW V | B | 62.8/42.9 |
| R24 | 7030003860 | S.RES | ERJ3GE JPW V | B | 56.4/31.1 |
| R25 | 7030003860 | S.RES | ERJ3GE JPW V | B | 52.3/44.4 |
| R26 | 7030003860 | S.RES | ERJ3GE JPW V | B | 27.7/10.6 |
| C11 | 4030006880 | S.CER | C1608 JB 1H 472K-T | B | 49.7/36.4 |
| C12 | 4030006880 | S.CER | C1608 JB 1H 472K-T | B | 65.4/36.9 |
| C13 | 4030006880 | S.CER | C1608 JB 1H 472K-T | B | 52.3/37.4 |
| C14 | 4030006880 | S.CER | C1608 JB 1H 472K-T | B | 62.8/37.9 |
| C15 | 4030006880 | S.CER | C1608 JB 1H 472K-T | B | 49.7/38.4 |
| C16 | 4030006880 | S.CER | C1608 JB 1H 472K-T | B | 65.4/38.9 |
| C17 | 4030006880 | S.CER | C1608 JB 1H 472K-T | B | 52.3/39.4 |
| C18 | 4030006880 | S.CER | C1608 JB 1H 472K-T | B | 62.8/39.9 |
| J1 | 6510021721 | S.CNR | 30FLT-SM2-TB (LF) (SN) | B | 57.6/41.1 |
| J2 | 6510018921 | S.CNR | B8B-PH-SM4-TB (LF) (SN) | B | 20/4.5 |
| J3 | 6510019971 | S.CNR | 52808-1071 | B | 9.5/33.1 |
| J4 | 6510019971 | S.CNR | 52808-1071 | B | 9.5/17.9 |
| EP2 | 6910012350 | S.BEA | MMZ1608Y 102BT | B | 13.6/29.6 |
| EP3 | 6910012350 | S.BEA | MMZ1608Y 102BT | B | 16.5/30.6 |
| EP5 | 6910012350 | S.BEA | MMZ1608Y 102BT | B | 16.5/32.6 |
| EP6 | 6910012350 | S.BEA | MMZ1608Y 102BT | B | 13.7/34.7 |
| EP7 | 6910012350 | S.BEA | MMZ1608Y 102BT | B | 13.7/36.6 |
| EP8 | 6910012350 | S.BEA | MMZ1608Y 102BT | B | 16.5/35.7 |
| EP9 | 6910012350 | S.BEA | MMZ1608Y 102BT | B | 13.7/33.4 |
| EP10 | 6910012350 | S.BEA | MMZ1608Y 102BT | B | 13.6/23.7 |
| EP11 | 6910012350 | S.BEA | MMZ1608Y 102BT | B | 13.6/22.4 |
| EP12 | 6910012350 | S.BEA | MMZ1608Y 102BT | B | 5.3/21.5 |
| EP13 | 6910012350 | S.BEA | MMZ1608Y 102BT | B | 13.6/20.4 |
| EP14 | 6910012350 | S.BEA | MMZ1608Y 102BT | B | 5.3/19.3 |
| EP15 | 6910012350 | S.BEA | MMZ1608Y 102BT | B | 13.6/18.4 |
| EP16 | 6910012350 | S.BEA | MMZ1608Y 102BT | B | 16.1/17.4 |
| EP17 | 6910012350 | S.BEA | MMZ1608Y 102BT | B | 13.6/16.4 |
| EP18 | 6910012350 | S.BEA | MMZ1608Y 102BT | B | 16.1/15.5 |
| EP19 | 6910012350 | S.BEA | MMZ1608Y 102BT | B | 13.6/14.6 |
| EP20 | 6910012350 | S.BEA | MMZ1608Y 102BT | B | 12.5/13.2 |
| EP21 | 6910012350 | S.BEA | MMZ1608Y 102BT | B | 13.6/25 |

## [VR-B BOARD]

| REF NO. | ORDER NO. | DESCRIPTION | | M. | H/V LOCATION |
|---|---|---|---|---|---|
| R1 | 7210003160 | VAR | RV-317 (RK0972210) | | |
| R2 | 7210003160 | VAR | RV-317 (RK0972210) | | |
| R3 | 7030003520 | S.RES | ERJ3GEYJ 472 V (4.7 k) | T | 28.6/2.7 |
| R4 | 7030003520 | S.RES | ERJ3GEYJ 472 V (4.7 k) | T | 27.8/8.4 |
| R5 | 7030003520 | S.RES | ERJ3GEYJ 472 V (4.7 k) | T | 10.5/2.7 |
| R6 | 7030003520 | S.RES | ERJ3GEYJ 472 V (4.7 k) | T | 11.1/8.4 |
| C1 | 4030006880 | S.CER | C1608 JB 1H 472K-T | T | 12.4/8.4 |
| C2 | 4030006880 | S.CER | C1608 JB 1H 472K-T | T | 11.8/2.7 |
| C3 | 4030006880 | S.CER | C1608 JB 1H 472K-T | T | 26.5/8.4 |
| C4 | 4030006880 | S.CER | C1608 JB 1H 472K-T | T | 27.3/2.7 |
| J1 | 6510019971 | S.CNR | 52808-1071 | T | 19.5/5 |

## [VR-C BOARD]

| REF NO. | ORDER NO. | DESCRIPTION | | M. | H/V LOCATION |
|---|---|---|---|---|---|
| R1 | 7210003160 | VAR | RV-317 (RK0972210) | | |
| R2 | 7210003160 | VAR | RV-317 (RK0972210) | | |
| R3 | 7030003520 | S.RES | ERJ3GEYJ 472 V (4.7 k) | T | 28.6/2.7 |
| R4 | 7030003520 | S.RES | ERJ3GEYJ 472 V (4.7 k) | T | 27.8/8.4 |
| R5 | 7030003520 | S.RES | ERJ3GEYJ 472 V (4.7 k) | T | 10.5/2.7 |
| R6 | 7030003520 | S.RES | ERJ3GEYJ 472 V (4.7 k) | T | 11.1/8.4 |
| C1 | 4030006880 | S.CER | C1608 JB 1H 472K-T | T | 12.4/8.4 |
| C2 | 4030006880 | S.CER | C1608 JB 1H 472K-T | T | 11.8/2.7 |
| C3 | 4030006880 | S.CER | C1608 JB 1H 472K-T | T | 26.5/8.4 |
| C4 | 4030006880 | S.CER | C1608 JB 1H 472K-T | T | 27.3/2.7 |
| J1 | 6510019971 | S.CNR | 52808-1071 | T | 19.5/5 |

## [VR-D BOARD]

| REF NO. | ORDER NO. | DESCRIPTION | | M. | H/V LOCATION |
|---|---|---|---|---|---|
| R1 | 7210001130 | VAR | RK097111T005A (10KB) | | |
| R2 | 7210001130 | VAR | RK097111T005A (10KB) | | |
| R3 | 7210001130 | VAR | RK097111T005A (10KB) | | |
| R4 | 7210001130 | VAR | RK097111T005A (10KB) | | |
| R5 | 7210001130 | VAR | RK097111T005A (10KB) | | |
| R6 | 7210001130 | VAR | RK097111T005A (10KB) | | |
| R7 | 7210001130 | VAR | RK097111T005A (10KB) | | |
| R11 | 7030003520 | S.RES | ERJ3GEYJ 472 V (4.7 k) | B | 11.3/3.6 |
| R12 | 7030003520 | S.RES | ERJ3GEYJ 472 V (4.7 k) | B | 28.4/3.6 |
| R13 | 7030003520 | S.RES | ERJ3GEYJ 472 V (4.7 k) | B | 45.2/3.6 |
| R14 | 7030003520 | S.RES | ERJ3GEYJ 472 V (4.7 k) | B | 62.3/3.6 |
| R15 | 7030003520 | S.RES | ERJ3GEYJ 472 V (4.7 k) | B | 79.2/3.6 |
| R16 | 7030003520 | S.RES | ERJ3GEYJ 472 V (4.7 k) | B | 96.3/3.6 |
| R17 | 7030003520 | S.RES | ERJ3GEYJ 472 V (4.7 k) | B | 100.5/6.5 |
| C11 | 4030006880 | S.CER | C1608 JB 1H 472K-T | B | 11.3/2 |
| C12 | 4030006880 | S.CER | C1608 JB 1H 472K-T | B | 28.4/2 |
| C13 | 4030006880 | S.CER | C1608 JB 1H 472K-T | B | 45.2/2 |
| C14 | 4030006880 | S.CER | C1608 JB 1H 472K-T | B | 62.3/2 |
| C15 | 4030006880 | S.CER | C1608 JB 1H 472K-T | B | 79.2/2 |
| C16 | 4030006880 | S.CER | C1608 JB 1H 472K-T | B | 96.3/2 |
| C17 | 4030006880 | S.CER | C1608 JB 1H 472K-T | B | 100.5/4.9 |
| J1 | 6510019971 | S.CNR | 52808-1071 | B | 43/16 |

## [FRONT UNIT]

| REF NO. | ORDER NO. | DESCRIPTION | | M. | H/V LOCATION |
|---|---|---|---|---|---|
| W1 | 8900015930 | CBL | OPC-886A (P1,N10,L75) | | |
| W2 | 8900015930 | CBL | OPC-886A (P1,N10,L75) | | |
| W3 | 8900012870 | CBL | OPC-1331 (N=40,L=70) | | |
| W4 | 8900008670 | CBL | OPC-849 (N:30 L:70) | | |
| W5 | 8900015930 | CBL | OPC-886A (P1,N10,L75) | | |
| W6 | 8900015930 | CBL | OPC-886A (P1,N10,L75) | | |
| W7 | 8900012880 | CBL | OPC-1336 (N=18,L=70) | | |
| W8 | 8900015930 | CBL | OPC-886A (P1,N10,L75) | | |
| W9 | 8900014871 | CBL | OPC-1332A-1 (P0.5,N40,L100) | | |
| W10 | 8900014730 | CBL | OPC-683A (P1,N10,L110) | | |
| W11 | 8900008670 | CBL | OPC-849 (N:30 L:70) | | |
| W12 | 8900008670 | CBL | OPC-849 (N:30 L:70) | | |
| W13 | 8900015930 | CBL | OPC-886A (P1,N10,L75) | | |
| W14 | 8900008670 | CBL | OPC-849 (N:30 L:70) | | |
| W15 | 8900015930 | CBL | OPC-886A (P1,N10,L75) | | |
| W51 | 9025900020 | | | | |
| EP1 | 6910015291 | UBD | LTA070B790F | | |
| EP11 | 6910011090 | SUT | RMS20-250-201-P | | |
| EP12 | 6910011090 | SUT | RMS20-250-201-P | | |
| EP13 | 0880001460 | UBD | EX-2500 #03 | | |
| EP101 | 6910015650 | E.OTH | S-G2218-3#01 (MOUNT PLATE) | | |
| EP102 | 6910015650 | E.OTH | S-G2218-3#01 (MOUNT PLATE) | | |

M.=Mounted side (T: Mounted on the Top side, B: Mounted on the Bottom side)
S.=Surface mount

## [SW-A BOARD]

| REF NO. | ORDER NO. | DESCRIPTION | | M. | H/V LOCATION |
|---|---|---|---|---|---|
| R2 | 7030003400 | S.RES | ERJ3GEYJ 471 V (470) | B | 8.3/85.5 |
| R3 | 7030003420 | S.RES | ERJ3GEYJ 681 V (680) | B | 8.3/53.1 |
| R4 | 7030003400 | S.RES | ERJ3GEYJ 471 V (470) | B | 8.3/56.1 |
| R6 | 7030003400 | S.RES | ERJ3GEYJ 471 V (470) | B | 26.8/42.4 |
| R7 | 7030003400 | S.RES | ERJ3GEYJ 471 V (470) | B | 33/41.6 |
| R8 | 7030003400 | S.RES | ERJ3GEYJ 471 V (470) | B | 51.6/40.4 |
| R9 | 7030003400 | S.RES | ERJ3GEYJ 471 V (470) | B | 62.5/36 |
| R10 | 7030003400 | S.RES | ERJ3GEYJ 471 V (470) | B | 75.6/36 |
| R11 | 7030003400 | S.RES | ERJ3GEYJ 471 V (470) | B | 90/37.5 |
| R12 | 7030003400 | S.RES | ERJ3GEYJ 471 V (470) | B | 57.8/82.8 |
| R13 | 7030003480 | S.RES | ERJ3GEYJ 222 V (2.2 k) | B | 3.6/40.8 |
| R14 | 7030003520 | S.RES | ERJ3GEYJ 472 V (4.7 k) | B | 48.4/80.4 |
| R15 | 7030003480 | S.RES | ERJ3GEYJ 222 V (2.2 k) | B | 29.6/39.4 |
| R16 | 7030003520 | S.RES | ERJ3GEYJ 472 V (4.7 k) | B | 41.1/39.4 |
| R17 | 7030003480 | S.RES | ERJ3GEYJ 222 V (2.2 k) | B | 66.3/36 |
| R18 | 7030003520 | S.RES | ERJ3GEYJ 472 V (4.7 k) | B | 79.5/38.1 |
| R19 | 7030003540 | S.RES | ERJ3GEYJ 682 V (6.8 k) | B | 57.3/40.5 |
| R20 | 7030003540 | S.RES | ERJ3GEYJ 682 V (6.8 k) | B | 29.6/40.7 |
| R21 | 7030003540 | S.RES | ERJ3GEYJ 682 V (6.8 k) | B | 2.4/38.1 |
| R22 | 7030003480 | S.RES | ERJ3GEYJ 222 V (2.2 k) | B | 100.2/66.5 |
| R23 | 7030003520 | S.RES | ERJ3GEYJ 472 V (4.7 k) | B | 101.5/63.3 |
| R24 | 7030003580 | S.RES | ERJ3GEYJ 153 V (15 k) | B | 98.6/41.5 |
| R25 | 7030003480 | S.RES | ERJ3GEYJ 222 V (2.2 k) | B | 100.3/19.2 |
| R26 | 7030003520 | S.RES | ERJ3GEYJ 472 V (4.7 k) | B | 100.3/7.2 |
| R27 | 7030003540 | S.RES | ERJ3GEYJ 682 V (6.8 k) | B | 98.6/77.5 |
| R28 | 7030003540 | S.RES | ERJ3GEYJ 682 V (6.8 k) | B | 96.2/35.2 |
| R29 | 7030003580 | S.RES | ERJ3GEYJ 153 V (15 k) | B | 51.2/53.1 |
| R30 | 7030003400 | S.RES | ERJ3GEYJ 471 V (470) | B | 47/58 |
| | | | | | |
| C1 | 4030011600 | S.CER | C1608 JB 1E 104K-T | B | 99.2/63 |
| C2 | 4030011600 | S.CER | C1608 JB 1E 104K-T | B | 88.8/59.1 |
| C3 | 4030011600 | S.CER | C1608 JB 1E 104K-T | B | 99.4/60.4 |
| C4 | 4030011600 | S.CER | C1608 JB 1E 104K-T | B | 90.1/59.1 |
| C5 | 4030011600 | S.CER | C1608 JB 1E 104K-T | B | 98.9/59 |
| C6 | 4030011600 | S.CER | C1608 JB 1E 104K-T | B | 53.3/77.2 |
| C7 | 4030011600 | S.CER | C1608 JB 1E 104K-T | B | 84.8/80.1 |
| C8 | 4030011600 | S.CER | C1608 JB 1E 104K-T | B | 83.5/65.3 |
| C9 | 4030011600 | S.CER | C1608 JB 1E 104K-T | B | 88/52.2 |
| | | | | | |
| J1 | 6510019971 | S.CNR | 52808-1071 | B | 46.7/72.7 |
| J2 | 6510019971 | S.CNR | 52808-1071 | B | 83.7/72.7 |
| J3 | 6510022471 | S.CNR | 40FLT-SM2-TB (LF) (SN) | B | 94.3/58.7 |
| | | | | | |
| DS5 | 5040002980 | S.LED | SML-512DW-T86 | T | 8.5/87.6 |
| DS6 | 5040002930 | S.LED | SML-512MW T86 | T | 8.5/86.3 |
| DS7 | 5040002930 | S.LED | SML-512MW T86 | T | 8.5/41.4 |
| DS8 | 5040002930 | S.LED | SML-512MW T86 | T | 26.2/43 |
| DS9 | 5040002930 | S.LED | SML-512MW T86 | T | 37.7/43 |
| DS10 | 5040002930 | S.LED | SML-512MW T86 | T | 49.2/43 |
| DS11 | 5040002930 | S.LED | SML-512MW T86 | T | 63.2/43 |
| DS12 | 5040002930 | S.LED | SML-512MW T86 | T | 56.2/84.4 |
| DS13 | 5040002930 | S.LED | SML-512MW T86 | T | 74.7/43 |
| DS14 | 5040002930 | S.LED | SML-512MW T86 | T | 86.2/43 |
| DS15 | 5040002990 | S.LED | SML-512UWT86 | T | 8.5/56.4 |
| DS16 | 5040002930 | S.LED | SML-512MW T86 | T | 8.5/55.1 |
| DS17 | 5040002930 | S.LED | SML-512MW T86 | T | 56.2/56.4 |
| | | | | | |
| S1 | 2260002740 | S.SW | LS8J2M-T | T | 9.7/77.2 |
| S2 | 2260002740 | S.SW | LS8J2M-T | T | 8.2/62.5 |
| S3 | 2260002740 | S.SW | LS8J2M-T | T | 8.2/48.8 |
| S4 | 2260002740 | S.SW | LS8J2M-T | T | 8.2/35.1 |
| S5 | 2260002740 | S.SW | LS8J2M-T | T | 37.5/38.9 |
| S6 | 2260002740 | S.SW | LS8J2M-T | T | 26/38.9 |
| S7 | 2260002740 | S.SW | LS8J2M-T | T | 49/38.9 |
| S8 | 2260002740 | S.SW | LS8J2M-T | T | 63/38.9 |
| S11 | 2260002740 | S.SW | LS8J2M-T | T | 56/79 |
| S12 | 2260002740 | S.SW | LS8J2M-T | T | 74.5/38.9 |
| S13 | 2260002740 | S.SW | LS8J2M-T | T | 86/38.9 |
| S14 | 2260002740 | S.SW | LS8J2M-T | T | 100.3/82.7 |
| S15 | 2260002740 | S.SW | LS8J2M-T | T | 100.3/70.7 |
| S16 | 2260002740 | S.SW | LS8J2M-T | T | 100.3/58.7 |
| S17 | 2260002740 | S.SW | LS8J2M-T | T | 100.3/46.7 |
| S18 | 2260002740 | S.SW | LS8J2M-T | T | 100.3/34.7 |
| S19 | 2260002740 | S.SW | LS8J2M-T | T | 100.3/22.7 |
| S20 | 2260002740 | S.SW | LS8J2M-T | T | 100.3/10.7 |
| S21 | 2260002740 | S.SW | LS8J2M-T | T | 56/51 |

## [SW-B BOARD]

| REF NO. | ORDER NO. | DESCRIPTION | | M. | H/V LOCATION |
|---|---|---|---|---|---|
| J1 | 6510020531 | S.CNR | 52808-1871 | B | 112/20.3 |
| | | | | | |
| S1 | 2260002740 | S.SW | LS8J2M-T | T | 16.8/24.6 |
| S2 | 2260002740 | S.SW | LS8J2M-T | T | 38.8/24.6 |
| S3 | 2260002740 | S.SW | LS8J2M-T | T | 60.8/24.6 |
| S4 | 2260002740 | S.SW | LS8J2M-T | T | 82.8/24.6 |
| S5 | 2260002740 | S.SW | LS8J2M-T | T | 104.8/24.6 |
| S6 | 2260002740 | S.SW | LS8J2M-T | T | 126.8/24.6 |
| S7 | 2260002740 | S.SW | LS8J2M-T | T | 148.8/24.6 |
| S8 | 2260002740 | S.SW | LS8J2M-T | T | 16.8/15.2 |
| S9 | 2260002740 | S.SW | LS8J2M-T | T | 38.8/15.2 |
| S10 | 2260002740 | S.SW | LS8J2M-T | T | 60.8/15.2 |
| S11 | 2260002740 | S.SW | LS8J2M-T | T | 82.8/15.2 |
| S12 | 2260002740 | S.SW | LS8J2M-T | T | 104.8/15.2 |
| S13 | 2260002740 | S.SW | LS8J2M-T | T | 126.8/15.2 |
| S14 | 2260002740 | S.SW | LS8J2M-T | T | 148.8/15.2 |
| S15 | 2260002740 | S.SW | LS8J2M-T | T | 125.5/3.1 |
| S16 | 2260002740 | S.SW | LS8J2M-T | T | 145.2/3.1 |
| S17 | 2260002740 | S.SW | LS8J2M-T | T | 167.3/3.1 |

## [SW-C BOARD]

| REF NO. | ORDER NO. | DESCRIPTION | | M. | H/V LOCATION |
|---|---|---|---|---|---|
| R1 | 7030003480 | S.RES | ERJ3GEYJ 222 V (2.2 k) | B | 32.7/126.7 |
| R2 | 7030003520 | S.RES | ERJ3GEYJ 472 V (4.7 k) | B | 30.7/122.6 |
| R3 | 7030003580 | S.RES | ERJ3GEYJ 153 V (15 k) | B | 30.7/118.1 |
| R4 | 7030003540 | S.RES | ERJ3GEYJ 682 V (6.8 k) | B | 30.6/125.7 |
| R5 | 7030003480 | S.RES | ERJ3GEYJ 222 V (2.2 k) | B | 30.6/100.1 |
| R6 | 7030003520 | S.RES | ERJ3GEYJ 472 V (4.7 k) | B | 30.6/97.4 |
| R7 | 7030003580 | S.RES | ERJ3GEYJ 153 V (15 k) | B | 31.9/94.7 |
| R8 | 7030003540 | S.RES | ERJ3GEYJ 682 V (6.8 k) | B | 31.9/101.7 |
| R9 | 7030003480 | S.RES | ERJ3GEYJ 222 V (2.2 k) | B | 34.8/71.3 |
| R10 | 7030003520 | S.RES | ERJ3GEYJ 472 V (4.7 k) | B | 35.5/69.3 |
| R11 | 7030003580 | S.RES | ERJ3GEYJ 153 V (15 k) | B | 35.5/66.6 |
| R12 | 7030003540 | S.RES | ERJ3GEYJ 682 V (6.8 k) | B | 32.7/84.5 |
| R13 | 7030003480 | S.RES | ERJ3GEYJ 222 V (2.2 k) | B | 43.1/46.9 |
| R14 | 7030003520 | S.RES | ERJ3GEYJ 472 V (4.7 k) | B | 49.2/44.4 |
| R15 | 7030003540 | S.RES | ERJ3GEYJ 682 V (6.8 k) | B | 43.1/50.6 |
| R51 | 7030003400 | S.RES | ERJ3GEYJ 471 V (470) | B | 38.3/124.2 |
| R52 | 7030003400 | S.RES | ERJ3GEYJ 471 V (470) | B | 41.2/124.2 |
| R53 | 7030003400 | S.RES | ERJ3GEYJ 471 V (470) | B | 37.9/107.7 |
| R54 | 7030003400 | S.RES | ERJ3GEYJ 471 V (470) | B | 46.6/102.1 |
| R55 | 7030003400 | S.RES | ERJ3GEYJ 471 V (470) | B | 43.2/98.8 |
| R56 | 7030003400 | S.RES | ERJ3GEYJ 471 V (470) | B | 46.6/99.4 |
| R57 | 7030003400 | S.RES | ERJ3GEYJ 471 V (470) | B | 48.7/89.9 |
| R58 | 7030003400 | S.RES | ERJ3GEYJ 471 V (470) | B | 48.7/93.3 |
| | | | | | |
| C1 | 4030011600 | S.CER | C1608 JB 1E 104K-T | B | 28.9/94.5 |
| C2 | 4030011600 | S.CER | C1608 JB 1E 104K-T | B | 41.2/82 |
| C3 | 4030011600 | S.CER | C1608 JB 1E 104K-T | B | 32.1/71.3 |
| C4 | 4030011600 | S.CER | C1608 JB 1E 104K-T | B | 43.5/82.4 |
| | | | | | |
| J1 | 6510021721 | S.CNR | 30FLT-SM2-TB (LF) (SN) | B | 37.9/89 |
| J2 | 6510019971 | S.CNR | 52808-1071 | B | 44.2/113.1 |
| | | | | | |
| DS51 | 5040002930 | S.LED | SML-512MW T86 | T | 36.5/123.3 |
| DS52 | 5040002930 | S.LED | SML-512MW T86 | T | 48/123.3 |
| DS53 | 5040002930 | S.LED | SML-512MW T86 | T | 36.5/104.8 |
| DS54 | 5040002930 | S.LED | SML-512MW T86 | T | 48/104.8 |
| DS55 | 5040002930 | S.LED | SML-512MW T86 | T | 36.5/94.8 |
| DS56 | 5040002930 | S.LED | SML-512MW T86 | T | 48/94.8 |
| DS57 | 5040002930 | S.LED | SML-512MW T86 | T | 36.5/84.8 |
| DS58 | 5040002930 | S.LED | SML-512MW T86 | T | 48/84.8 |
| | | | | | |
| S1 | 2260002740 | S.SW | LS8J2M-T | T | 36.7/129.1 |
| S2 | 2260002740 | S.SW | LS8J2M-T | T | 48.2/129.1 |
| S3 | 2260002740 | S.SW | LS8J2M-T | T | 36.7/118.9 |
| S4 | 2260002740 | S.SW | LS8J2M-T | T | 48.2/118.9 |
| S5 | 2260002740 | S.SW | LS8J2M-T | T | 36.7/100.4 |
| S6 | 2260002740 | S.SW | LS8J2M-T | T | 48.2/100.4 |
| S7 | 2260002740 | S.SW | LS8J2M-T | T | 36.7/90.4 |
| S8 | 2260002740 | S.SW | LS8J2M-T | T | 48.2/90.4 |
| S9 | 2260002740 | S.SW | LS8J2M-T | T | 36.7/80.4 |
| S10 | 2260002740 | S.SW | LS8J2M-T | T | 48.2/80.4 |
| S11 | 2260002740 | S.SW | LS8J2M-T | T | 36.7/70 |
| S12 | 2260002740 | S.SW | LS8J2M-T | T | 36.7/61.2 |
| S13 | 2260002740 | S.SW | LS8J2M-T | T | 36.7/52.4 |
| S14 | 2260002740 | S.SW | LS8J2M-T | T | 36.5/42.7 |
| S15 | 2260002740 | S.SW | LS8J2M-T | T | 61.5/42.7 |
| S16 | 2260002740 | S.SW | LS8J2M-T | T | 12.2/32.4 |
| S17 | 2260002740 | S.SW | LS8J2M-T | T | 74.3/27.4 |
| S18 | 2260002740 | S.SW | LS8J2M-T | T | 12.2/14.7 |
| S19 | 2260002740 | S.SW | LS8J2M-T | T | 75.2/14.2 |
| S20 | 2260002740 | S.SW | LS8J2M-T | T | 12.2/2.3 |
| S21 | 2260002740 | S.SW | LS8J2M-T | T | 75.2/2.3 |
| S22 | 2260002740 | S.SW | LS8J2M-T | T | 25.7/2.3 |

M.=Mounted side (T: Mounted on the Top side, B: Mounted on the Bottom side)
S.=Surface mount

## [JACK BOARD]

| REF NO. | ORDER NO. | DESCRIPTION | | M. | H/V LOCATION |
|---|---|---|---|---|---|
| L1 | 6200003950 | S.COL | HF50ACC 322513-T | T | 33/7.8 |
| L2 | 6200003950 | S.COL | HF50ACC 322513-T | T | 23.5/2.7 |
| L3 | 6200003950 | S.COL | HF50ACC 322513-T | T | 16.2/2 |
| L4 | 6180000900 | COL | LAL 03NA 101K | | |
| L5 | 6180000900 | COL | LAL 03NA 101K | | |
| L6 | 6180000900 | COL | LAL 03NA 101K | | |
| L101 | 6180000900 | COL | LAL 03NA 101K | | |
| L102 | 6180000900 | COL | LAL 03NA 101K | | |
| L103 | 6180000900 | COL | LAL 03NA 101K | | |
| R1 | 7030006060 | S.RES | ERJ12YJ100U (10) | T | 24.1/6.1 |
| R2 | 7030006060 | S.RES | ERJ12YJ100U (10) | T | 16.8/5.4 |
| C1 | 4030006880 | S.CER | C1608 JB 1H 472K-T | B | 26.4/2.1 |
| C2 | 4030006880 | S.CER | C1608 JB 1H 472K-T | B | 26.4/4.8 |
| C3 | 4030006880 | S.CER | C1608 JB 1H 472K-T | B | 20.7/6.9 |
| C101 | 4030006880 | S.CER | C1608 JB 1H 472K-T | B | 15.3/6.9 |
| C102 | 4030006880 | S.CER | C1608 JB 1H 472K-T | B | 11.6/2.1 |
| J1 | 6510019971 | S.CNR | 52808-1071 | B | 19/3.2 |
| J2 | 6510023891 | CNR | S-G4617#01F | | |
| J102 | 6510023900 | CNR | LGR4619-7000 | | |
| EP101 | 6910012350 | S.BEA | MMZ1608Y 102BT | B | 15.3/8.2 |
| EP102 | 6910012350 | S.BEA | MMZ1608Y 102BT | B | 10.3/2.1 |

## [MIC BOARD]

| REF NO. | ORDER NO. | DESCRIPTION | | M. | H/V LOCATION |
|---|---|---|---|---|---|
| L1 | 6200003261 | S.COL | NLV32T-101J | B | 4.5/17.8 |
| L2 | 6200003261 | S.COL | NLV32T-101J | B | 2.4/12.5 |
| L3 | 6200003261 | S.COL | NLV32T-101J | B | 4.5/2 |
| L4 | 6200003950 | S.COL | HF50ACC 322513-T | B | 15.2/15.1 |
| C1 | 4030006880 | S.CER | C1608 JB 1H 472K-T | B | 8.6/16.1 |
| C2 | 4030006880 | S.CER | C1608 JB 1H 472K-T | B | 2.8/5.5 |
| C3 | 4030006880 | S.CER | C1608 JB 1H 472K-T | B | 14.2/12.3 |
| C4 | 4030007130 | S.CER | C1608 CH 1H 101J-T | B | 10.1/11.2 |
| C5 | 4030006880 | S.CER | C1608 JB 1H 472K-T | B | 1.5/5.5 |
| C6 | 4030006880 | S.CER | C1608 JB 1H 472K-T | B | 9.6/.9 |
| C7 | 4030006880 | S.CER | C1608 JB 1H 472K-T | B | 7.7/10.1 |
| C8 | 4030007090 | S.CER | C1608 CH 1H 470J-T | B | 9.4/13.9 |
| J1 | 6510000191 | CNR | FM214-8SS (P) -1 | | |
| J2 | 6510019971 | S.CNR | 52808-1071 | B | 12.7/20.2 |
| EP2 | 6910012350 | S.BEA | MMZ1608Y 102BT | B | 4.1/6.3 |
| EP3 | 6910012350 | S.BEA | MMZ1608Y 102BT | B | 7.6/2 |
| EP4 | 6910012350 | S.BEA | MMZ1608Y 102BT | B | 10.4/16 |
| EP5 | 6910012350 | S.BEA | MMZ1608Y 102BT | B | 2.7/8.1 |
| EP6 | 6910012350 | S.BEA | MMZ1608Y 102BT | B | 7.7/7.7 |
| EP7 | 6910015130 | S.BEA | MMZ1608D 301BT | B | 17.2/10.8 |
| EP8 | 6910015130 | S.BEA | MMZ1608D 301BT | B | 15.9/10.8 |
| EP9 | 6910015130 | S.BEA | MMZ1608D 301BT | B | 10.2/6.9 |
| EP10 | 6910015130 | S.BEA | MMZ1608D 301BT | B | 11.5/9.1 |
| EP11 | 6910012350 | S.BEA | MMZ1608Y 102BT | B | 5.4/14.1 |

## [TENKEY BOARD]

| REF NO. | ORDER NO. | DESCRIPTION | | M. | H/V LOCATION |
|---|---|---|---|---|---|
| IC1 | 1130011510 | S.IC | BU2099FV-E2 | B | 37.5/67.3 |
| IC2 | 1130011510 | S.IC | BU2099FV-E2 | B | 33.5/31.8 |
| R1 | 7030003480 | S.RES | ERJ3GEYJ 222 V (2.2 k) | B | 16.3/75.9 |
| R2 | 7030003520 | S.RES | ERJ3GEYJ 472 V (4.7 k) | B | 16.6/67.7 |
| R3 | 7030003580 | S.RES | ERJ3GEYJ 153 V (15 k) | B | 13.8/47.4 |
| R4 | 7030003540 | S.RES | ERJ3GEYJ 682 V (6.8 k) | B | 16.3/79.3 |
| R5 | 7030003480 | S.RES | ERJ3GEYJ 222 V (2.2 k) | B | 31.5/67.4 |
| R6 | 7030003520 | S.RES | ERJ3GEYJ 472 V (4.7 k) | B | 30.7/65.6 |
| R7 | 7030003580 | S.RES | ERJ3GEYJ 153 V (15 k) | B | 32.3/49.9 |
| R8 | 7030003540 | S.RES | ERJ3GEYJ 682 V (6.8 k) | B | 30.3/78.3 |
| R9 | 7030003480 | S.RES | ERJ3GEYJ 222 V (2.2 k) | B | 49.8/70.1 |
| R10 | 7030003520 | S.RES | ERJ3GEYJ 472 V (4.7 k) | B | 49.8/62.2 |
| R11 | 7030003580 | S.RES | ERJ3GEYJ 153 V (15 k) | B | 47.6/52.6 |
| R12 | 7030003540 | S.RES | ERJ3GEYJ 682 V (6.8 k) | B | 49.8/78.4 |
| R51 | 7030003390 | S.RES | ERJ3GEYJ 391 V (390) | B | 8/78 |
| R52 | 7030003390 | S.RES | ERJ3GEYJ 391 V (390) | B | 8/75.3 |
| R53 | 7030003390 | S.RES | ERJ3GEYJ 391 V (390) | B | 8/70.9 |
| R54 | 7030003390 | S.RES | ERJ3GEYJ 391 V (390) | B | 8/72.9 |
| R55 | 7030003390 | S.RES | ERJ3GEYJ 391 V (390) | B | 10.7/58.2 |
| R56 | 7030003390 | S.RES | ERJ3GEYJ 391 V (390) | B | 12/58.2 |
| R57 | 7030003390 | S.RES | ERJ3GEYJ 391 V (390) | B | 8/49.5 |
| R58 | 7030003390 | S.RES | ERJ3GEYJ 391 V (390) | B | 8/46.8 |
| R59 | 7030003390 | S.RES | ERJ3GEYJ 391 V (390) | B | 19.1/78 |
| R60 | 7030003390 | S.RES | ERJ3GEYJ 391 V (390) | B | 19.1/75.3 |
| R61 | 7030003390 | S.RES | ERJ3GEYJ 391 V (390) | B | 25.5/64.5 |
| R62 | 7030003390 | S.RES | ERJ3GEYJ 391 V (390) | B | 25.5/65.8 |
| R63 | 7030003390 | S.RES | ERJ3GEYJ 391 V (390) | B | 25.5/51.7 |
| R64 | 7030003390 | S.RES | ERJ3GEYJ 391 V (390) | B | 25.5/53 |
| R65 | 7030003390 | S.RES | ERJ3GEYJ 391 V (390) | B | 25.5/49.5 |
| R66 | 7030003390 | S.RES | ERJ3GEYJ 391 V (390) | B | 25.5/47 |
| R67 | 7030003390 | S.RES | ERJ3GEYJ 391 V (390) | B | 43/78 |
| R68 | 7030003390 | S.RES | ERJ3GEYJ 391 V (390) | B | 43/75.3 |
| R69 | 7030003390 | S.RES | ERJ3GEYJ 391 V (390) | B | 43.8/68.5 |
| R70 | 7030003390 | S.RES | ERJ3GEYJ 391 V (390) | B | 43.8/67.2 |
| R71 | 7030003390 | S.RES | ERJ3GEYJ 391 V (390) | B | 43/59 |
| R72 | 7030003390 | S.RES | ERJ3GEYJ 391 V (390) | B | 43/56.3 |
| R73 | 7030003390 | S.RES | ERJ3GEYJ 391 V (390) | B | 44.4/51.3 |
| R74 | 7030003390 | S.RES | ERJ3GEYJ 391 V (390) | B | 44.4/52.6 |
| R75 | 7030003460 | S.RES | ERJ3GEYJ 152 V (1.5 k) | B | 29.7/21 |
| R76 | 7030003460 | S.RES | ERJ3GEYJ 152 V (1.5 k) | B | 44.3/18.1 |
| C1 | 4030011600 | S.CER | C1608 JB 1E 104K-T | B | 8.5/66.9 |
| C2 | 4030011600 | S.CER | C1608 JB 1E 104K-T | B | 5.4/69.3 |
| C3 | 4030011600 | S.CER | C1608 JB 1E 104K-T | B | 11/67.4 |
| C4 | 4030011600 | S.CER | C1608 JB 1E 104K-T | B | 35.9/71.5 |
| C5 | 4030011600 | S.CER | C1608 JB 1E 104K-T | B | 31.7/35.9 |
| J1 | 6510021721 | S.CNR | 30FLT-SM2-TB (LF) (SN) | B | 5.2/60 |
| J2 | 6510021721 | S.CNR | 30FLT-SM2-TB (LF) (SN) | B | 5.2/31.6 |
| J3 | 6510021721 | S.CNR | 30FLT-SM2-TB (LF) (SN) | B | 49.9/33 |
| J4 | 6510019971 | S.CNR | 52808-1071 | B | 53.9/57 |
| J5 | 6510019971 | S.CNR | 52808-1071 | B | 24.5/74.7 |
| J6 | 6510003401 | CNR | B04B-EH-S (LF) (SN) | | |
| J7 | 6510018971 | S.CNR | B4B-PH-SM4-TB (LF) (SN) | B | 36.5/3 |
| DS1 | 5040002980 | S.LED | SML-512DW-T86 | T | 29.5/19 |
| DS2 | 5040002980 | S.LED | SML-512DW-T86 | T | 45.5/19 |
| S1 | 2260002740 | S.SW | LS8J2M-T | T | 9.5/34 |
| S2 | 2260002740 | S.SW | LS8J2M-T | T | 9.5/26 |
| S3 | 2260002740 | S.SW | LS8J2M-T | T | 29.5/34 |
| S4 | 2260002740 | S.SW | LS8J2M-T | T | 29.5/26 |
| S5 | 2260002740 | S.SW | LS8J2M-T | T | 45.5/34 |
| S6 | 2260002740 | S.SW | LS8J2M-T | T | 45.5/26 |
| S7 | 2260002740 | S.SW | LS8J2M-T | T | 9.5/12.7 |
| S8 | 2260002740 | S.SW | LS8J2M-T | T | 29.5/16 |
| S9 | 2260002740 | S.SW | LS8J2M-T | T | 29.5/7.5 |
| S11 | 2260002820 | S.SW | LS9J2M-2D/D-T | T | 10.5/76.2 |
| S12 | 2260002820 | S.SW | LS9J2M-2D/D-T | T | 10.5/66.7 |
| S13 | 2260002820 | S.SW | LS9J2M-2D/D-T | T | 10.5/57.2 |
| S14 | 2260002820 | S.SW | LS9J2M-2D/D-T | T | 10.5/47.7 |
| S15 | 2260002820 | S.SW | LS9J2M-2D/D-T | T | 28/76.2 |
| S16 | 2260002820 | S.SW | LS9J2M-2D/D-T | T | 28/66.7 |
| S17 | 2260002820 | S.SW | LS9J2M-2D/D-T | T | 28/57.2 |
| S18 | 2260002820 | S.SW | LS9J2M-2D/D-T | T | 28/47.7 |
| S19 | 2260002820 | S.SW | LS9J2M-2D/D-T | T | 45.5/76.2 |
| S20 | 2260002820 | S.SW | LS9J2M-2D/D-T | T | 45.5/66.7 |
| S21 | 2260002820 | S.SW | LS9J2M-2D/D-T | T | 45.5/57.2 |
| S22 | 2260002820 | S.SW | LS9J2M-2D/D-T | T | 45.5/47.7 |
| S23 | 2260002740 | S.SW | LS8J2M-T | T | 45.5/16 |
| S24 | 2260002740 | S.SW | LS8J2M-T | T | 45.5/7.5 |

M.=Mounted side (T: Mounted on the Top side, B: Mounted on the Bottom side)
S.=Surface mount

## [PBT1 BOARD]

| REF NO. | ORDER NO. | DESCRIPTION | | M. | H/V LOCATION |
|---|---|---|---|---|---|
| R1 | 7210003180 | VAR | RV-319 (RK0972210) | | |
| R2 | 7030003520 | S.RES | ERJ3GEYJ 472 V (4.7 k) | T | 13.5/6.5 |
| R3 | 7030003520 | S.RES | ERJ3GEYJ 472 V (4.7 k) | T | 13.5/10 |
| C1 | 4030006880 | S.CER | C1608 JB 1H 472K-T | T | 15.6/10 |
| C2 | 4030006880 | S.CER | C1608 JB 1H 472K-T | T | 15.6/6.5 |
| J1 | 6510019971 | S.CNR | 52808-1071 | T | 24.5/7 |
| S1 | 2250000410 | ECR | TP90D96E20-30F-2178-1 | | |

## [PBT2 BOARD]

| REF NO. | ORDER NO. | DESCRIPTION | | M. | H/V LOCATION |
|---|---|---|---|---|---|
| R1 | 7210003180 | VAR | RV-319 (RK0972210) | | |
| R2 | 7210003170 | VAR | RV-318 (RK09L1120CON) | | |
| R3 | 7030003520 | S.RES | ERJ3GEYJ 472 V (4.7 k) | T | 47.4/8.5 |
| R4 | 7030003520 | S.RES | ERJ3GEYJ 472 V (4.7 k) | T | 47.4/9.8 |
| R5 | 7030003520 | S.RES | ERJ3GEYJ 472 V (4.7 k) | T | 16.2/12.3 |
| C1 | 4030006880 | S.CER | C1608 JB 1H 472K-T | T | 52.5/10.2 |
| C2 | 4030006880 | S.CER | C1608 JB 1H 472K-T | T | 50.6/10.2 |
| C3 | 4030006880 | S.CER | C1608 JB 1H 472K-T | T | 16.2/11 |
| J1 | 6510019971 | S.CNR | 52808-1071 | T | 59.1/5.1 |
| S1 | 2250000410 | ECR | TP90D96E20-30F-2178-1 | | |

## [LED BOARD]

| REF NO. | ORDER NO. | DESCRIPTION | | M. | H/V LOCATION |
|---|---|---|---|---|---|
| R1 | 7030003470 | S.RES | ERJ3GEYJ 182 V (1.8 k) | T | 9.1/14.9 |
| R2 | 7030003420 | S.RES | ERJ3GEYJ 681 V (680) | T | 21/14.9 |
| R3 | 7030003440 | S.RES | ERJ3GEYJ 102 V (1 k) | T | 32.1/14.9 |
| R4 | 7030003400 | S.RES | ERJ3GEYJ 471 V (470) | T | 80.2/14.9 |
| R5 | 7030003470 | S.RES | ERJ3GEYJ 182 V (1.8 k) | T | 126/14.9 |
| R6 | 7030003420 | S.RES | ERJ3GEYJ 681 V (680) | T | 139/14.9 |
| R7 | 7030003440 | S.RES | ERJ3GEYJ 102 V (1 k) | T | 149.8/14.9 |
| J1 | 6510020711 | S.CNR | 52793-1070 (1090) | T | 111.3/2.6 |
| DS1 | 5040003000 | S.LED | SML-A12UT-T86 | T | 5.6/15.9 |
| DS2 | 5040002961 | S.LED | SML-A12MT T86J | T | 17.6/15.9 |
| DS3 | 5040003010 | S.LED | SML-A12WT | T | 29.6/15.9 |
| DS4 | 5040002970 | S.LED | CL-270WB-D-TS | T | 76.6/15.9 |
| DS5 | 5040003000 | S.LED | SML-A12UT-T86 | T | 123.6/15.9 |
| DS6 | 5040002961 | S.LED | SML-A12MT T86J | T | 135.6/15.9 |
| DS7 | 5040003010 | S.LED | SML-A12WT | T | 147.6/15.9 |

## [CF BOARD]

| REF NO. | ORDER NO. | DESCRIPTION | | M. | H/V LOCATION |
|---|---|---|---|---|---|
| R1 | 7030003470 | S.RES | ERJ3GEYJ 182 V (1.8 k) | T | 8.8/8.7 |
| J1 | 6510024151 | S.CNR | 50FY-BMT-TB (LF) (SN) | T | 34.5/4.4 |
| J2 | 6510025670 | S.CNR | 31-5620-050-719-871 | T | 34.5/13.6 |
| J3 | 6510021601 | S.CNR | S2B-PH-SM4-TB (LF) (SN) | T | 13.7/3.7 |
| DS1 | 5040002990 | S.LED | SML-512UWT86 | T | 61.2/40.5 |
| EP2 | 6910015640 | E.OTH | 30-5610-000-002-000 | | |

## [DISPLAY BOARD]

| REF NO. | ORDER NO. | DESCRIPTION | | M. | H/V LOCATION |
|---|---|---|---|---|---|
| IC1 | 1130009640 | S.IC | BU4051BCFV-E2 | T | 121.9/76.4 |
| IC2 | 1130009640 | S.IC | BU4051BCFV-E2 | T | 110.5/10.9 |
| IC3 | 1130009640 | S.IC | BU4051BCFV-E2 | T | 76.7/20 |
| IC4 | 1130009640 | S.IC | BU4051BCFV-E2 | T | 24/61.2 |
| IC5 | 1130009640 | S.IC | BU4051BCFV-E2 | T | 106.8/77.4 |
| IC6 | 1140011820 | S.IC | M30620FCMGP D5 | T | 48.1/27.7 |
| IC7 | 1130011510 | S.IC | BU2099FV-E2 | T | 124/59.8 |
| IC201 | 1130009301 | S.IC | TC7SET08FU (T5L,JF) | T | 71.1/51.8 |
| IC202 | 1130009301 | S.IC | TC7SET08FU (T5L,JF) | T | 107.2/58.5 |
| IC601 | 1130011551 | S.IC | RX-4581NB-F | T | 39/45.9 |
| IC651 | 1110005821 | S.IC | R3112N281A-TR-F | T | 47.9/91.1 |
| Q200 | 1590000430 | S.TR | DTC144EUA T106 | T | 40.8/89.7 |
| Q201 | 1530003301 | S.TR | 2SC3647S-TD-E | T | 91.1/47.1 |
| Q202 | 1530003301 | S.TR | 2SC3647S-TD-E | T | 91.1/26.5 |
| Q203 | 1530002060 | S.TR | 2SC4081 T106 R | T | 73.9/61.5 |
| Q204 | 1520000651 | S.TR | 2SB1201S-TL-E | T | 79.5/65.1 |
| Q205 | 1590000680 | S.TR | DTC114EUA T106 | T | 70.8/57.1 |
| Q206 | 1590000680 | S.TR | DTC114EUA T106 | T | 113/19.4 |
| Q208 | 1590001330 | S.TR | DTA114EUA T106 | T | 120/68.5 |
| Q209 | 1520000651 | S.TR | 2SB1201S-TL-E | T | 113.9/59.9 |
| Q210 | 1530002060 | S.TR | 2SC4081 T106 R | T | 107.3/55.3 |
| Q211 | 1590001330 | S.TR | DTA114EUA T106 | T | 122.5/65.4 |
| Q212 | 1590000680 | S.TR | DTC114EUA T106 | T | 72.5/54.3 |
| Q501 | 1590000680 | S.TR | DTC114EUA T106 | T | 86/88.8 |
| Q502 | 1590000680 | S.TR | DTC114EUA T106 | T | 86/92.5 |
| Q503 | 1590000680 | S.TR | DTC114EUA T106 | T | 82.8/90.8 |
| Q504 | 1590001330 | S.TR | DTA114EUA T106 | T | 89.2/88.8 |
| Q505 | 1590000680 | S.TR | DTC114EUA T106 | T | 125/66.6 |
| Q601 | 1510000501 | S.TR | 2SA1162-GR (TE85R,F) | T | 41.4/85.2 |
| D7 | 1750000520 | S.DIO | DAN222TL | T | 122.4/18.7 |
| D8 | 1160000140 | S.DIO | DAP222 TL | T | 122.4/15.3 |
| D9 | 1730002340 | S.ZEN | MA8047-M (TX) | T | 74.3/59.3 |
| D10 | 1730002590 | S.ZEN | MA8033-H (TX) | T | 109.5/56.9 |
| D11 | 1790001670 | S.DIO | RB706F-40T106 | T | 121.3/10.6 |
| D12 | 1790001670 | S.DIO | RB706F-40T106 | T | 60/31 |
| D601 | 1790001250 | S.DIO | MA2S111-(TX) | T | 42.2/82.8 |
| D602 | 1790001250 | S.DIO | MA2S111-(TX) | T | 39/85.9 |
| D603 | 1790001250 | S.DIO | MA2S111-(TX) | T | 39/83.4 |
| X1 | 6050009870 | S.XTL | CR-567 (9.8304 MHz) | T | 49.7/44.5 |
| L201 | 6200001831 | S.COL | NLV32T-100J | T | 112/85.8 |
| L203 | 6200003950 | S.COL | HF50ACC 322513-T | T | 115.2/85.6 |
| L204 | 6200001831 | S.COL | NLV32T-100J | T | 126.9/91.6 |
| L205 | 6200003950 | S.COL | HF50ACC 322513-T | T | 61.2/36.6 |
| L207 | 6200003950 | S.COL | HF50ACC 322513-T | T | 117.4/17.1 |
| L208 | 6200003950 | S.COL | HF50ACC 322513-T | T | 118.4/85.6 |
| L209 | 6200003950 | S.COL | HF50ACC 322513-T | T | 9.9/64 |
| L210 | 6190001191 | S.COL | D10F-#A814AY-101K | T | 86.6/79.7 |
| L211 | 6190001191 | S.COL | D10F-#A814AY-101K | T | 81.2/38.2 |
| L601 | 6200001831 | S.COL | NLV32T-100J | T | 34.7/83.8 |
| R200 | 7030003440 | S.RES | ERJ3GEYJ 102 V (1 k) | T | 73.1/51.7 |
| R201 | 7030003470 | S.RES | ERJ3GEYJ 182 V (1.8 k) | T | 96.6/43.6 |
| R202 | 7030003470 | S.RES | ERJ3GEYJ 182 V (1.8 k) | T | 96.6/32.9 |
| R203 | 7030003800 | S.RES | ERJ3GEYJ 105 V (1 M) | T | 49.7/41.2 |
| R208 | 7030003360 | S.RES | ERJ3GEYJ 221 V (220) | T | 75/57 |
| R209 | 7030003860 | S.RES | ERJ3GE JPW V | T | 14.6/25 |
| R210 | 7030003860 | S.RES | ERJ3GE JPW V | T | 22/24.4 |
| R212 | 7030003660 | S.RES | ERJ3GEYJ 683 V (68 k) | T | 67.8/57.6 |
| R213 | 7030003580 | S.RES | ERJ3GEYJ 153 V (15 k) | T | 70.3/54.7 |
| R214 | 7030003440 | S.RES | ERJ3GEYJ 102 V (1 k) | T | 40.7/13.4 |
| R215 | 7030003440 | S.RES | ERJ3GEYJ 102 V (1 k) | T | 39.4/13.4 |
| R216 | 7030003440 | S.RES | ERJ3GEYJ 102 V (1 k) | T | 38.1/13.4 |
| R217 | 7030003440 | S.RES | ERJ3GEYJ 102 V (1 k) | T | 36.8/13.4 |
| R218 | 7030003440 | S.RES | ERJ3GEYJ 102 V (1 k) | T | 35.5/13.4 |
| R219 | 7030003440 | S.RES | ERJ3GEYJ 102 V (1 k) | T | 34.2/13.4 |
| R220 | 7030003440 | S.RES | ERJ3GEYJ 102 V (1 k) | T | 31.6/13.6 |
| R221 | 7030003440 | S.RES | ERJ3GEYJ 102 V (1 k) | T | 32.9/13.4 |
| R222 | 7030003440 | S.RES | ERJ3GEYJ 102 V (1 k) | T | 30.6/16.1 |
| R223 | 7030003440 | S.RES | ERJ3GEYJ 102 V (1 k) | T | 29.8/13.5 |
| R224 | 7030003440 | S.RES | ERJ3GEYJ 102 V (1 k) | T | 29.1/16.1 |
| R225 | 7030003440 | S.RES | ERJ3GEYJ 102 V (1 k) | T | 28.3/13.4 |
| R226 | 7030003440 | S.RES | ERJ3GEYJ 102 V (1 k) | T | 27.6/16.1 |
| R227 | 7030003440 | S.RES | ERJ3GEYJ 102 V (1 k) | T | 26.8/13.4 |
| R228 | 7030003440 | S.RES | ERJ3GEYJ 102 V (1 k) | T | 25.5/13.4 |
| R229 | 7030003440 | S.RES | ERJ3GEYJ 102 V (1 k) | T | 22.9/13.4 |
| R230 | 7030003440 | S.RES | ERJ3GEYJ 102 V (1 k) | T | 24.2/13.4 |
| R232 | 7030003440 | S.RES | ERJ3GEYJ 102 V (1 k) | T | 74.1/13.4 |
| R233 | 7030003440 | S.RES | ERJ3GEYJ 102 V (1 k) | T | 76.9/13.4 |
| R234 | 7030003440 | S.RES | ERJ3GEYJ 102 V (1 k) | T | 75.4/13.4 |
| R235 | 7030003440 | S.RES | ERJ3GEYJ 102 V (1 k) | T | 78.2/13.4 |
| R236 | 7030003440 | S.RES | ERJ3GEYJ 102 V (1 k) | T | 79.5/13.4 |
| R237 | 7030003440 | S.RES | ERJ3GEYJ 102 V (1 k) | T | 80.8/13.4 |
| R238 | 7030003440 | S.RES | ERJ3GEYJ 102 V (1 k) | T | 82.1/13.4 |
| R239 | 7030003440 | S.RES | ERJ3GEYJ 102 V (1 k) | T | 107.3/86.7 |
| R240 | 7030003440 | S.RES | ERJ3GEYJ 102 V (1 k) | T | 105.9/86.7 |
| R241 | 7030003680 | S.RES | ERJ3GEYJ 104 V (100 k) | T | 108.6/86.6 |
| R242 | 7030003680 | S.RES | ERJ3GEYJ 104 V (100 k) | T | 104.5/86.7 |
| R246 | 7030003440 | S.RES | ERJ3GEYJ 102 V (1 k) | T | 59.5/13.3 |
| R247 | 7030003440 | S.RES | ERJ3GEYJ 102 V (1 k) | T | 58.2/13.3 |
| R248 | 7030003440 | S.RES | ERJ3GEYJ 102 V (1 k) | T | 56.9/13.3 |
| R249 | 7030003440 | S.RES | ERJ3GEYJ 102 V (1 k) | T | 55.6/13.3 |
| R250 | 7030003440 | S.RES | ERJ3GEYJ 102 V (1 k) | T | 54.3/13.3 |
| R251 | 7030003320 | S.RES | ERJ3GEYJ 101 V (100) | T | 52.8/13.3 |
| R252 | 7030003440 | S.RES | ERJ3GEYJ 102 V (1 k) | T | 51.5/13.3 |
| R253 | 7030003440 | S.RES | ERJ3GEYJ 102 V (1 k) | T | 50.2/13.3 |

M.=Mounted side (T: Mounted on the Top side, B: Mounted on the Bottom side)
S.=Surface mount

## [DISPLAY BOARD]

| REF NO. | ORDER NO. | DESCRIPTION | | M. | H/V LOCATION |
|---|---|---|---|---|---|
| R254 | 7030003680 | S.RES | ERJ3GEYJ 104 V (100 k) | T | 48.4/13.3 |
| R255 | 7030003640 | S.RES | ERJ3GEYJ 473 V (47 k) | T | 12.6/14.1 |
| R256 | 7030003640 | S.RES | ERJ3GEYJ 473 V (47 k) | T | 16.5/14.1 |
| R257 | 7030003670 | S.RES | ERJ3GEYJ 823 V (82 k) | T | 13.9/14.1 |
| R258 | 7030003670 | S.RES | ERJ3GEYJ 823 V (82 k) | T | 15.2/14.1 |
| R259 | 7030003440 | S.RES | ERJ3GEYJ 102 V (1 k) | T | 12.8/90.1 |
| R260 | 7030003440 | S.RES | ERJ3GEYJ 102 V (1 k) | T | 19.4/87.2 |
| R261 | 7030003440 | S.RES | ERJ3GEYJ 102 V (1 k) | T | 10.1/88.5 |
| R262 | 7030003440 | S.RES | ERJ3GEYJ 102 V (1 k) | T | 7.1/79.8 |
| R263 | 7030003440 | S.RES | ERJ3GEYJ 102 V (1 k) | T | 18/81.9 |
| R264 | 7030003440 | S.RES | ERJ3GEYJ 102 V (1 k) | T | 7.1/78.5 |
| R265 | 7030003440 | S.RES | ERJ3GEYJ 102 V (1 k) | T | 18/80.6 |
| R266 | 7030003440 | S.RES | ERJ3GEYJ 102 V (1 k) | T | 7.1/77.2 |
| R267 | 7030003440 | S.RES | ERJ3GEYJ 102 V (1 k) | T | 18/79.3 |
| R268 | 7030003440 | S.RES | ERJ3GEYJ 102 V (1 k) | T | 7.1/75.9 |
| R269 | 7030003440 | S.RES | ERJ3GEYJ 102 V (1 k) | T | 18/78 |
| R270 | 7030003440 | S.RES | ERJ3GEYJ 102 V (1 k) | T | 7.1/74.6 |
| R271 | 7030003440 | S.RES | ERJ3GEYJ 102 V (1 k) | T | 18/76.7 |
| R272 | 7030003440 | S.RES | ERJ3GEYJ 102 V (1 k) | T | 7.1/73.3 |
| R273 | 7030003440 | S.RES | ERJ3GEYJ 102 V (1 k) | T | 7.1/72 |
| R274 | 7030003440 | S.RES | ERJ3GEYJ 102 V (1 k) | T | 18/75.4 |
| R275 | 7030003440 | S.RES | ERJ3GEYJ 102 V (1 k) | T | 7.1/70.7 |
| R276 | 7030003440 | S.RES | ERJ3GEYJ 102 V (1 k) | T | 18/74.1 |
| R278 | 7030003440 | S.RES | ERJ3GEYJ 102 V (1 k) | T | 13.4/42.7 |
| R279 | 7030003440 | S.RES | ERJ3GEYJ 102 V (1 k) | T | 4/43.9 |
| R280 | 7030003440 | S.RES | ERJ3GEYJ 102 V (1 k) | T | 13.4/44 |
| R281 | 7030003440 | S.RES | ERJ3GEYJ 102 V (1 k) | T | 4/45.2 |
| R282 | 7030003440 | S.RES | ERJ3GEYJ 102 V (1 k) | T | 13.4/45.3 |
| R283 | 7030003440 | S.RES | ERJ3GEYJ 102 V (1 k) | T | 4/46.5 |
| R284 | 7030003520 | S.RES | ERJ3GEYJ 472 V (4.7 k) | T | 13.4/46.6 |
| R285 | 7030003440 | S.RES | ERJ3GEYJ 102 V (1 k) | T | 4/47.8 |
| R286 | 7030003440 | S.RES | ERJ3GEYJ 102 V (1 k) | T | 13.4/47.9 |
| R287 | 7030003440 | S.RES | ERJ3GEYJ 102 V (1 k) | T | 4/49.1 |
| R288 | 7030003440 | S.RES | ERJ3GEYJ 102 V (1 k) | T | 13.4/49.2 |
| R289 | 7030003440 | S.RES | ERJ3GEYJ 102 V (1 k) | T | 13.4/50.5 |
| R290 | 7030003440 | S.RES | ERJ3GEYJ 102 V (1 k) | T | 4/51.7 |
| R291 | 7030003440 | S.RES | ERJ3GEYJ 102 V (1 k) | T | 13.4/51.8 |
| R292 | 7030003440 | S.RES | ERJ3GEYJ 102 V (1 k) | T | 4/53 |
| R293 | 7030003440 | S.RES | ERJ3GEYJ 102 V (1 k) | T | 13.4/54.4 |
| R294 | 7030003440 | S.RES | ERJ3GEYJ 102 V (1 k) | T | 4/55.6 |
| R295 | 7030003440 | S.RES | ERJ3GEYJ 102 V (1 k) | T | 4/58.2 |
| R296 | 7030003440 | S.RES | ERJ3GEYJ 102 V (1 k) | T | 13.4/58.3 |
| R297 | 7030003440 | S.RES | ERJ3GEYJ 102 V (1 k) | T | 4/60.8 |
| R298 | 7030003440 | S.RES | ERJ3GEYJ 102 V (1 k) | T | 13.4/59.6 |
| R299 | 7030003440 | S.RES | ERJ3GEYJ 102 V (1 k) | T | 4/50.4 |
| R300 | 7030003440 | S.RES | ERJ3GEYJ 102 V (1 k) | T | 4/63.4 |
| R301 | 7030003440 | S.RES | ERJ3GEYJ 102 V (1 k) | T | 13.4/62.2 |
| R302 | 7030003560 | S.RES | ERJ3GEYJ 103 V (10 k) | T | 13.4/60.9 |
| R303 | 7030003560 | S.RES | ERJ3GEYJ 103 V (10 k) | T | 4/62.1 |
| R304 | 7030003560 | S.RES | ERJ3GEYJ 103 V (10 k) | T | 13.4/57 |
| R305 | 7030003560 | S.RES | ERJ3GEYJ 103 V (10 k) | T | 4/59.5 |
| R306 | 7030003560 | S.RES | ERJ3GEYJ 103 V (10 k) | T | 4/56.9 |
| R307 | 7030003560 | S.RES | ERJ3GEYJ 103 V (10 k) | T | 13.4/55.7 |
| R308 | 7030003560 | S.RES | ERJ3GEYJ 103 V (10 k) | T | 4/54.3 |
| R309 | 7030003560 | S.RES | ERJ3GEYJ 103 V (10 k) | T | 13.4/53.1 |
| R310 | 7030003440 | S.RES | ERJ3GEYJ 102 V (1 k) | T | 24.2/32 |
| R311 | 7030003440 | S.RES | ERJ3GEYJ 102 V (1 k) | T | 22.9/32 |
| R312 | 7030003440 | S.RES | ERJ3GEYJ 102 V (1 k) | T | 104.9/9.4 |
| R313 | 7030003440 | S.RES | ERJ3GEYJ 102 V (1 k) | T | 104.9/10.7 |
| R314 | 7030003440 | S.RES | ERJ3GEYJ 102 V (1 k) | T | 104.1/12.2 |
| R315 | 7030003440 | S.RES | ERJ3GEYJ 102 V (1 k) | T | 104.9/6.8 |
| R316 | 7030003440 | S.RES | ERJ3GEYJ 102 V (1 k) | T | 116.1/13.7 |
| R317 | 7030003440 | S.RES | ERJ3GEYJ 102 V (1 k) | T | 116.7/8.3 |
| R318 | 7030003440 | S.RES | ERJ3GEYJ 102 V (1 k) | T | 116.1/11.7 |
| R319 | 7030003440 | S.RES | ERJ3GEYJ 102 V (1 k) | T | 116.6/9.6 |
| R320 | 7030003440 | S.RES | ERJ3GEYJ 102 V (1 k) | T | 135.2/23.4 |
| R321 | 7030003440 | S.RES | ERJ3GEYJ 102 V (1 k) | T | 127.7/20.8 |
| R322 | 7030003440 | S.RES | ERJ3GEYJ 102 V (1 k) | T | 126.4/20.8 |
| R323 | 7030003560 | S.RES | ERJ3GEYJ 103 V (10 k) | T | 114.9/18.7 |
| R325 | 7030003380 | S.RES | ERJ3GEYJ 331 V (330) | T | 106.9/69.6 |
| R326 | 7030003360 | S.RES | ERJ3GEYJ 221 V (220) | T | 109.8/54.4 |
| R327 | 7030003580 | S.RES | ERJ3GEYJ 153 V (15 k) | T | 105.4/55.1 |
| R328 | 7030003660 | S.RES | ERJ3GEYJ 683 V (68 k) | T | 105.1/61.2 |
| R329 | 7030003560 | S.RES | ERJ3GEYJ 103 V (10 k) | T | 38/33.3 |
| R330 | 7030003480 | S.RES | ERJ3GEYJ 222 V (2.2 k) | T | 128.8/54.1 |
| R331 | 7030003640 | S.RES | ERJ3GEYJ 473 V (47 k) | T | 18/84.5 |
| R332 | 7030003640 | S.RES | ERJ3GEYJ 473 V (47 k) | T | 9.1/84.8 |
| R333 | 7030003640 | S.RES | ERJ3GEYJ 473 V (47 k) | T | 18/83.2 |
| R334 | 7030003640 | S.RES | ERJ3GEYJ 473 V (47 k) | T | 9.1/83.5 |
| R335 | 7030003670 | S.RES | ERJ3GEYJ 823 V (82 k) | T | 21.4/84.5 |
| R336 | 7030003670 | S.RES | ERJ3GEYJ 823 V (82 k) | T | 8.4/86.9 |
| R337 | 7030003670 | S.RES | ERJ3GEYJ 823 V (82 k) | T | 20.7/83.2 |
| R338 | 7030003670 | S.RES | ERJ3GEYJ 823 V (82 k) | T | 8.1/81.1 |
| R339 | 7070000261 | RES | ERG2SJ 220 (22) | | |
| R340 | 7070000261 | RES | ERG2SJ 220 (22) | | |
| R342 | 7030003640 | S.RES | ERJ3GEYJ 473 V (47 k) | T | 35.4/38.4 |
| R343 | 7030003640 | S.RES | ERJ3GEYJ 473 V (47 k) | T | 105.1/57.7 |
| R351 | 7030003440 | S.RES | ERJ3GEYJ 102 V (1 k) | T | 123.2/70.3 |
| R352 | 7030003440 | S.RES | ERJ3GEYJ 102 V (1 k) | T | 101.2/80.6 |
| R353 | 7030003440 | S.RES | ERJ3GEYJ 102 V (1 k) | T | 102.3/75 |
| R354 | 7030003440 | S.RES | ERJ3GEYJ 102 V (1 k) | T | 100.2/78 |
| R355 | 7030003440 | S.RES | ERJ3GEYJ 102 V (1 k) | T | 101/75.2 |
| R356 | 7030003440 | S.RES | ERJ3GEYJ 102 V (1 k) | T | 128.4/78.7 |
| R357 | 7030003440 | S.RES | ERJ3GEYJ 102 V (1 k) | T | 126.7/72.1 |
| R358 | 7030003440 | S.RES | ERJ3GEYJ 102 V (1 k) | T | 114.8/75.7 |
| R359 | 7030003440 | S.RES | ERJ3GEYJ 102 V (1 k) | T | 116.1/75.4 |
| R360 | 7030003440 | S.RES | ERJ3GEYJ 102 V (1 k) | T | 130.1/77.2 |
| R361 | 7030003440 | S.RES | ERJ3GEYJ 102 V (1 k) | T | 129.4/74 |
| R362 | 7030003440 | S.RES | ERJ3GEYJ 102 V (1 k) | T | 116.4/79.3 |
| R363 | 7030003440 | S.RES | ERJ3GEYJ 102 V (1 k) | T | 117.4/75.5 |
| R364 | 7030003640 | S.RES | ERJ3GEYJ 473 V (47 k) | T | 61.2/29 |
| R365 | 7030004730 | S.RES | ERJ3GEYF 222 V (2.2 k) | T | 61.9/33 |
| R366 | 7030003440 | S.RES | ERJ3GEYJ 102 V (1 k) | T | 128.4/64.2 |
| R369 | 7030003860 | S.RES | ERJ3GE JPW V | T | 55.7/37.4 |

## [DISPLAY BOARD]

| REF NO. | ORDER NO. | DESCRIPTION | | M. | H/V LOCATION |
|---|---|---|---|---|---|
| R501 | 7030003640 | S.RES | ERJ3GEYJ 473 V (47 k) | T | 68.5/16.9 |
| R502 | 7030003640 | S.RES | ERJ3GEYJ 473 V (47 k) | T | 67.2/16.9 |
| R503 | 7030003640 | S.RES | ERJ3GEYJ 473 V (47 k) | T | 36.1/32.5 |
| R504 | 7030003440 | S.RES | ERJ3GEYJ 102 V (1 k) | T | 135.3/62.2 |
| R505 | 7030003360 | S.RES | ERJ3GEYJ 221 V (220) | T | 89.2/86.9 |
| R601 | 7030003860 | S.RES | ERJ3GE JPW V | T | 44.1/89.8 |
| R602 | 7030003520 | S.RES | ERJ3GEYJ 472 V (4.7 k) | T | 41.6/87.6 |
| R603 | 7030003640 | S.RES | ERJ3GEYJ 473 V (47 k) | T | 32.4/45.4 |
| R604 | 7030003560 | S.RES | ERJ3GEYJ 103 V (10 k) | T | 32.4/46.9 |
| R651 | 7030003650 | S.RES | ERJ3GEYJ 563 V (56 k) | T | 114.8/95 |
| R652 | 7030003620 | S.RES | ERJ3GEYJ 333 V (33 k) | T | 118.6/95 |
| R653 | 7030003520 | S.RES | ERJ3GEYJ 472 V (4.7 k) | T | 44.1/86.1 |
| | | | | | |
| C8 | 4030011600 | S.CER | C1608 JB 1E 104K-T | T | 134.5/74.9 |
| C201 | 4310001170 | MLR | ECQE1A 124JBB | | |
| C202 | 4030016880 | S.CER | C4520 CH 3F 150KT-A | T | 125.1/37.2 |
| C203 | 4030007020 | S.CER | C1608 CH 1H 120J-T | T | 50.5/39.9 |
| C204 | 4030007020 | S.CER | C1608 CH 1H 120J-T | T | 47.9/40 |
| C205 | 4030011600 | S.CER | C1608 JB 1E 104K-T | T | 27.7/64.4 |
| C206 | 4030011600 | S.CER | C1608 JB 1E 104K-T | T | 109/80.8 |
| C207 | 4030011600 | S.CER | C1608 JB 1E 104K-T | T | 73.2/22.2 |
| C208 | 4030011600 | S.CER | C1608 JB 1E 104K-T | T | 109.5/6.1 |
| C209 | 4030011600 | S.CER | C1608 JB 1E 104K-T | T | 124.1/79.9 |
| C210 | 4030011600 | S.CER | C1608 JB 1E 104K-T | T | 67.8/56.3 |
| C211 | 4030011600 | S.CER | C1608 JB 1E 104K-T | T | 107.7/61.2 |
| C212 | 4510008800 | S.ELE | EEE1EA100SR | T | 68.8/61.3 |
| C213 | 4510009150 | S.ELE | EEE1EA470WP | T | 77.8/52 |
| C214 | 4510008800 | S.ELE | EEE1EA100SR | T | 72.2/67.1 |
| C215 | 4030011600 | S.CER | C1608 JB 1E 104K-T | T | 120.9/85.8 |
| C216 | 4030011600 | S.CER | C1608 JB 1E 104K-T | T | 58.7/5.2 |
| C217 | 4030011600 | S.CER | C1608 JB 1E 104K-T | T | 108.3/83.3 |
| C218 | 4510009150 | S.ELE | EEE1EA470WP | T | 99.6/84.8 |
| C219 | 4030006860 | S.CER | C1608 JB 1H 102K-T | T | 109.8/83.3 |
| C220 | 4030011600 | S.CER | C1608 JB 1E 104K-T | T | 126.2/88.8 |
| C221 | 4030011600 | S.CER | C1608 JB 1E 104K-T | T | 103.2/55.1 |
| C222 | 4030011600 | S.CER | C1608 JB 1E 104K-T | T | 127.7/15.4 |
| C223 | 4030011600 | S.CER | C1608 JB 1E 104K-T | T | 134.7/27.7 |
| C224 | 4030011600 | S.CER | C1608 JB 1E 104K-T | T | 48.1/38.2 |
| C225 | 4030011600 | S.CER | C1608 JB 1E 104K-T | T | 119.8/61.5 |
| C226 | 4030011600 | S.CER | C1608 JB 1E 104K-T | T | 17.2/87.2 |
| C227 | 4030011600 | S.CER | C1608 JB 1E 104K-T | T | 120.9/82.9 |
| C228 | 4510008800 | S.ELE | EEE1EA100SR | T | 125.5/83.6 |
| C229 | 4030011600 | S.CER | C1608 JB 1E 104K-T | T | 7.3/65.1 |
| C230 | 4030006880 | S.CER | C1608 JB 1H 472K-T | T | 58.6/29 |
| C231 | 4030011600 | S.CER | C1608 JB 1E 104K-T | T | 47.6/17.4 |
| C232 | 4030011600 | S.CER | C1608 JB 1E 104K-T | T | 58/31.2 |
| C241 | 4030011600 | S.CER | C1608 JB 1E 104K-T | T | 118.9/80.3 |
| C242 | 4030011600 | S.CER | C1608 JB 1E 104K-T | T | 116.4/81.2 |
| C243 | 4030011600 | S.CER | C1608 JB 1E 104K-T | T | 120.2/80.3 |
| C244 | 4030011600 | S.CER | C1608 JB 1E 104K-T | T | 121.1/73 |
| C245 | 4030011600 | S.CER | C1608 JB 1E 104K-T | T | 128.4/80 |
| C246 | 4030011600 | S.CER | C1608 JB 1E 104K-T | T | 131.3/74.6 |
| C247 | 4030011600 | S.CER | C1608 JB 1E 104K-T | T | 130.1/75.9 |
| C248 | 4030011600 | S.CER | C1608 JB 1E 104K-T | T | 124.8/73 |
| C249 | 4030011600 | S.CER | C1608 JB 1E 104K-T | T | 112.1/6.1 |
| C250 | 4030011600 | S.CER | C1608 JB 1E 104K-T | T | 113.5/14.3 |
| C251 | 4030011600 | S.CER | C1608 JB 1E 104K-T | T | 112.1/7.4 |
| C252 | 4030011600 | S.CER | C1608 JB 1E 104K-T | T | 115.9/6.9 |
| C253 | 4030011600 | S.CER | C1608 JB 1E 104K-T | T | 104.1/13.5 |
| C254 | 4030011600 | S.CER | C1608 JB 1E 104K-T | T | 109.5/7.4 |
| C255 | 4030011600 | S.CER | C1608 JB 1E 104K-T | T | 104.9/8.1 |
| C256 | 4030011600 | S.CER | C1608 JB 1E 104K-T | T | 104.9/5.5 |
| C257 | 4030011600 | S.CER | C1608 JB 1E 104K-T | T | 72.8/13.4 |
| C258 | 4030011600 | S.CER | C1608 JB 1E 104K-T | T | 72.7/16.2 |
| C259 | 4030011600 | S.CER | C1608 JB 1E 104K-T | T | 80.2/19 |
| C260 | 4030011600 | S.CER | C1608 JB 1E 104K-T | T | 72.4/19.4 |
| C261 | 4030011600 | S.CER | C1608 JB 1E 104K-T | T | 76.4/28.1 |
| C262 | 4030011600 | S.CER | C1608 JB 1E 104K-T | T | 75.1/28.1 |
| C263 | 4030011600 | S.CER | C1608 JB 1E 104K-T | T | 73.3/27.3 |
| C264 | 4030011600 | S.CER | C1608 JB 1E 104K-T | T | 72.5/25.5 |
| C265 | 4030011600 | S.CER | C1608 JB 1E 104K-T | T | 20.9/52.3 |
| C266 | 4030011600 | S.CER | C1608 JB 1E 104K-T | T | 28.4/62.5 |
| C267 | 4030011600 | S.CER | C1608 JB 1E 104K-T | T | 21.6/55.8 |
| C268 | 4030011600 | S.CER | C1608 JB 1E 104K-T | T | 21.6/57.1 |
| C601 | 4510008800 | S.ELE | EEE1EA100SR | T | 29.4/86.2 |
| C602 | 4030011600 | S.CER | C1608 JB 1E 104K-T | T | 39.2/41.8 |
| C651 | 4030008890 | S.CER | C1608 JB 1H 273K-T | T | 47.9/93.5 |
| C652 | 4030011600 | S.CER | C1608 JB 1E 104K-T | T | 50.3/91.9 |
| | | | | | |
| J1 | 6510021721 | S.CNR | 30FLT-SM2-TB (LF) (SN) | T | 13.2/80.7 |
| J2 | 6510021721 | S.CNR | 30FLT-SM2-TB (LF) (SN) | T | 8.7/52.4 |
| J3 | 6510022471 | S.CNR | 40FLT-SM2-TB (LF) (SN) | T | 131.5/62.7 |
| J4 | 6510020531 | S.CNR | 52808-1871 | T | 30.8/8.8 |
| J5 | 6510019971 | S.CNR | 52808-1071 | T | 77.7/8.8 |
| J6 | 6510021721 | S.CNR | 30FLT-SM2-TB (LF) (SN) | T | 130.9/21.4 |
| J7 | 6510019971 | S.CNR | 52808-1071 | T | 55.4/8.8 |
| J201 | 6510022471 | S.CNR | 40FLT-SM2-TB (LF) (SN) | T | 6.2/28.7 |
| J202 | 6510022471 | S.CNR | 40FLT-SM2-TB (LF) (SN) | T | 18.1/28.7 |
| J203 | 6510020081 | S.CNR | 52808-2071 (2090) | T | 113.5/91.2 |
| J205 | 6510003401 | CNR | B04B-EH-S (LF) (SN) | | |
| J301 | 6510021181 | S.CNR | SM2 (8.0) B-BHS1TB(LF)(SN) | T | 131.7/38.9 |
| J302 | 6510022191 | S.CNR | B3B-PH-SM4-TB (LF) (SN) | T | 94.2/7.5 |
| J601 | 6510021861 | CNR | BH-800.4GG <LTC> | | |
| | | | | | |
| T201 | 5910000981 | TSM | 3319-T088-LF | | |
| | | | | | |
| BT601 | 3020000110 | LTM | CR2032 | | |

M.=Mounted side (T: Mounted on the Top side, B: Mounted on the Bottom side)
S.=Surface mount

## [RXPLL-A UNIT]

| REF NO. | ORDER NO. | DESCRIPTION | M. | H/V LOCATION |
|---|---|---|---|---|
| IC1 | 1130011530 | S.IC CD74HC4094M96 | T | 11.9/24.1 |
| IC2 | 1130009691 | S.IC TC74HCT7007AF (F) | T | 22.8/23.3 |
| IC51 | 1180001251 | S.IC TA7808F (TE16L,Q) | T | 77/16.7 |
| IC61 | 1180000421 | S.IC TA78L05F (TE12R,F) | B | 56.5/16 |
| IC101 | 1140007881 | S.IC TC190G08EFG0046JDZ/SC1246A | T | 31.3/89.7 |
| IC102 | 1130003831 | S.IC TC7S04F (TE85R,F) | T | 33.1/74.7 |
| IC104 | 1130003831 | S.IC TC7S04F (TE85R,F) | T | 31.7/101.1 |
| IC201 | 1130009230 | S.IC LMX2306TMX/NOPB | T | 27.9/38.8 |
| IC501 | 1140007881 | S.IC TC190G08EFG0046JDZ/SC1246A | T | 31.3/142.5 |
| IC502 | 1130003831 | S.IC TC7S04F (TE85R,F) | T | 24.8/127.4 |
| IC503 | 1130003831 | S.IC TC7S04F (TE85R,F) | T | 31.7/154.1 |
| IC651 | 1140004550 | S.IC M65343FP/SC1287 | T | 22.6/169.2 |
| IC652 | 1130003831 | S.IC TC7S04F (TE85R,F) | T | 13.7/163.1 |
| IC1051 | 1190002010 | S.IC SD5400CY <TOMO> | T | 176.9/99.9 |
| IC1081 | 1110006180 | S.IC UPG2009TB-E3 | B | 151.6/85.1 |
| IC1402 | 1190002110 | S.IC NJG1519KC1-TE3 | T | 117.3/69.5 |
| IC1403 | 1190002110 | S.IC NJG1519KC1-TE3 | T | 113.4/106.3 |
| IC1501 | 1110006121 | S.IC DBM9A41-G-TR | T | 121.2/124.5 |
| IC1502 | 1110006121 | S.IC DBM9A41-G-TR | T | 121.2/133 |
| IC1503 | 1110006100 | S.IC NJM5534MD-TE1 | T | 138.4/151.7 |
| IC1504 | 1110006100 | S.IC NJM5534MD-TE1 | T | 119.2/151.7 |
| IC1505 | 1110006190 | S.IC NJM074M-TE1 | T | 128.8/166.9 |
| IC1506 | 1110006100 | S.IC NJM5534MD-TE1 | T | 128.8/175.6 |
| IC1651 | 1130011921 | S.IC TC74LCX00F (EL,F) | T | 110/126.2 |
| IC1652 | 1110005420 | S.IC BA15532F-E2 | T | 139.8/175.6 |
| IC1653 | 1110005100 | S.IC NJM072BM-TE1 | B | 140/172 |
| IC1701 | 1130011530 | S.IC CD74HC4094M96 | T | 158/166.7 |
| IC1702 | 1130011530 | S.IC CD74HC4094M96 | T | 148.9/166.7 |
| IC1703 | 1160000131 | S.IC TD62783AFG (S,EL) | T | 157.3/154.8 |
| IC1704 | 1180000790 | S.IC AN78L10M (E1) | B | 183.2/159.8 |
| | | | | |
| Q1 | 1590001050 | S.TR DTC114TUA T106 | B | 30.3/22.6 |
| Q30 | 1530002060 | S.TR 2SC4081 T106 R | T | 22.3/110.9 |
| Q41 | 1590000680 | S.TR DTC114EUA T106 | T | 12.8/34.2 |
| Q150 | 1560000331 | S.FET 2SK210-GR (TE85R,F) | T | 26.9/53 |
| Q151 | 1530002280 | S.TR 2SC4081 T106 S | B | 33.6/57.2 |
| Q152 | 1530002280 | S.TR 2SC4081 T106 S | B | 30.8/78.2 |
| Q201 | 1590001330 | S.TR DTA114EUA T106 | T | 29.6/34.1 |
| Q220 | 1560000331 | S.FET 2SK210-GR (TE85R,F) | T | 72.5/33.9 |
| Q230 | 1560000331 | S.FET 2SK210-GR (TE85R,F) | T | 72.5/46.4 |
| Q240 | 1560000331 | S.FET 2SK210-GR (TE85R,F) | T | 72.5/58.9 |
| Q250 | 1560000331 | S.FET 2SK210-GR (TE85R,F) | T | 72.5/71.4 |
| Q260 | 1560000331 | S.FET 2SK210-GR (TE85R,F) | T | 72.5/83.9 |
| Q270 | 1560000331 | S.FET 2SK210-GR (TE85R,F) | T | 72.5/95.8 |
| Q280 | 1590000680 | S.TR DTC114EUA T106 | T | 82.3/34.4 |
| Q281 | 1590000680 | S.TR DTC114EUA T106 | T | 82.3/46.9 |
| Q282 | 1590000680 | S.TR DTC114EUA T106 | T | 82.3/59.4 |
| Q283 | 1590000680 | S.TR DTC114EUA T106 | T | 82.3/71.9 |
| Q284 | 1590000680 | S.TR DTC114EUA T106 | T | 82.3/84.4 |
| Q285 | 1590000680 | S.TR DTC114EUA T106 | T | 82.3/96.4 |
| Q301 | 1530003431 | S.TR 2SC5226-4-TL-E | T | 92.1/30.1 |
| Q302 | 1530003431 | S.TR 2SC5226-4-TL-E | B | 89.1/42.5 |
| Q303 | 1530003431 | S.TR 2SC5226-4-TL-E | B | 91.3/25.1 |
| Q341 | 1590000680 | S.TR DTC114EUA T106 | T | 86.3/36.7 |
| Q351 | 1580000751 | S.FET 3SK294 (TE85L,F) | T | 92.1/56.9 |
| Q352 | 1530003431 | S.TR 2SC5226-4-TL-E | B | 89.2/64.5 |
| Q363 | 1590000680 | S.TR DTC114EUA T106 | T | 86.8/54.3 |
| Q364 | 1590001330 | S.TR DTA114EUA T106 | T | 86.8/57.4 |
| Q441 | 1590000680 | S.TR DTC114EUA T106 | T | 86.5/73.7 |
| Q502 | 1590000680 | S.TR DTC114EUA T106 | T | 41.9/128.8 |
| Q540 | 1530002060 | S.TR 2SC4081 T106 R | B | 58.7/141.2 |
| Q541 | 1560000331 | S.FET 2SK210-GR (TE85R,F) | T | 68.9/142.8 |
| Q561 | 1530003431 | S.TR 2SC5226-4-TL-E | T | 70.6/153.8 |
| Q580 | 1530003431 | S.TR 2SC5226-4-TL-E | T | 41.7/147.4 |
| Q591 | 1530003151 | S.TR 2SC4673D-TD-E | T | 61.7/166.5 |
| Q592 | 1520000561 | S.TR 2SB1123 T-TD-E | B | 52/165.3 |
| Q593 | 1590000680 | S.TR DTC114EUA T106 | B | 54.8/171.2 |
| Q680 | 1530002060 | S.TR 2SC4081 T106 R | T | 37.5/163.2 |
| Q702 | 1530002601 | S.TR 2SC4215-O (TE85R,F) | T | 31.4/110.9 |
| Q1001 | 1530003851 | S.TR 2SC5551F-TD-E | B | 174/9 |
| Q1004 | 1590001960 | S.TR XP4311 (TX) | T | 150/18.8 |
| Q1005 | 1590001960 | S.TR XP4311 (TX) | T | 145.9/18.8 |
| Q1006 | 1530003851 | S.TR 2SC5551F-TD-E | B | 150/37.6 |
| Q1007 | 1530003851 | S.TR 2SC5551F-TD-E | B | 176.5/42.5 |
| Q1008 | 1530003851 | S.TR 2SC5551F-TD-E | B | 160.5/42.5 |
| Q1101 | 1530003860 | TR 2SC3950D | | |
| Q1102 | 1590000680 | S.TR DTC114EUA T106 | T | 165.5/133.8 |
| Q1103 | 1520000561 | S.TR 2SB1123 T-TD-E | B | 168.6/127.8 |
| Q1104 | 1530003860 | TR 2SC3950D | | |
| Q1105 | 1530003841 | S.TR 2SC5501-4-TR-E | T | 166.5/142.1 |
| Q1205 | 1590001960 | S.TR XP4311 (TX) | T | 158.8/55.6 |
| Q1209 | 1530003851 | S.TR 2SC5551F-TD-E | B | 121/34.9 |
| Q1210 | 1530003851 | S.TR 2SC5551F-TD-E | B | 111.5/34.9 |
| Q1211 | 1560001311 | S.FET MMBFU310LT1G | T | 159.5/96.4 |
| Q1212 | 1560001311 | S.FET MMBFU310LT1G | T | 153.5/96.4 |
| Q1213 | 1590000680 | S.TR DTC114EUA T106 | B | 156.9/123.7 |
| Q1214 | 1520000561 | S.TR 2SB1123 T-TD-E | B | 155.4/113.5 |
| Q1301 | 1530003151 | S.TR 2SC4673D-TD-E | T | 157.8/120 |
| Q1352 | 1530003851 | S.TR 2SC5551F-TD-E | B | 140/66.7 |
| Q1401 | 1530003841 | S.TR 2SC5501-4-TR-E | T | 131.9/105.8 |
| Q1402 | 1530003021 | S.TR 2SC4402-3-TL-E | T | 123.4/111.8 |
| Q1403 | 1530003021 | S.TR 2SC4402-3-TL-E | T | 123.4/114.3 |
| Q1501 | 1530003450 | S.TR 2SC4835-R (TX) | T | 133.5/143.5 |
| Q1502 | 1530003450 | S.TR 2SC4835-R (TX) | T | 120.4/143.5 |
| Q1651 | 1530002601 | S.TR 2SC4215-O (TE85R,F) | B | 105.6/140.3 |
| Q1701 | 1590001960 | S.TR XP4311 (TX) | T | 106.6/43.9 |
| Q1702 | 1590001960 | S.TR XP4311 (TX) | T | 148.9/147.2 |
| Q1703 | 1590001960 | S.TR XP4311 (TX) | T | 146.4/147.2 |
| | | | | |
| D101 | 1750000520 | S.DIO DAN222TL | T | 41.8/86.2 |
| D152 | 1720000590 | S.VCP MA357 (TX) | T | 17.6/59.9 |
| D153 | 1790000491 | S.DIO HSM88ASTR-E | T | 27.2/60.4 |

## [RXPLL-A UNIT]

| REF NO. | ORDER NO. | DESCRIPTION | M. | H/V LOCATION |
|---|---|---|---|---|
| D154 | 1790000491 | S.DIO HSM88ASTR-E | T | 27.2/63.8 |
| D201 | 1750000520 | S.DIO DAN222TL | T | 32.4/34.1 |
| D220 | 1720000590 | S.VCP MA357 (TX) | T | 50.8/31.8 |
| D221 | 1720000590 | S.VCP MA357 (TX) | T | 52.9/31.8 |
| D222 | 1790000620 | S.DIO MA77 (TX) | T | 82.6/29.8 |
| D230 | 1720000590 | S.VCP MA357 (TX) | T | 50.8/44.2 |
| D231 | 1720000590 | S.VCP MA357 (TX) | T | 52.9/44.2 |
| D232 | 1790000620 | S.DIO MA77 (TX) | T | 82.6/42.3 |
| D240 | 1720000590 | S.VCP MA357 (TX) | T | 50.8/56.7 |
| D241 | 1720000590 | S.VCP MA357 (TX) | T | 52.9/56.7 |
| D242 | 1790000620 | S.DIO MA77 (TX) | T | 82.6/54.8 |
| D250 | 1720000590 | S.VCP MA357 (TX) | T | 50.8/69.2 |
| D252 | 1790000620 | S.DIO MA77 (TX) | T | 82.6/67.3 |
| D261 | 1720000590 | S.VCP MA357 (TX) | T | 52.9/81.7 |
| D262 | 1790000620 | S.DIO MA77 (TX) | T | 82.6/79.8 |
| D270 | 1720000590 | S.VCP MA357 (TX) | T | 50.8/94.2 |
| D271 | 1720000590 | S.VCP MA357 (TX) | T | 52.4/96.7 |
| D272 | 1790000620 | S.DIO MA77 (TX) | T | 82.5/92 |
| D341 | 1790000620 | S.DIO MA77 (TX) | T | 90/37.2 |
| D342 | 1160000070 | S.DIO DAN202K T146 | B | 81.1/47.7 |
| D362 | 1790000620 | S.DIO MA77 (TX) | T | 88.3/65.5 |
| D363 | 1790000620 | S.DIO MA77 (TX) | T | 88.3/62 |
| D421 | 1790000620 | S.DIO MA77 (TX) | T | 91.9/85 |
| D441 | 1790000620 | S.DIO MA77 (TX) | T | 89.6/74.4 |
| D501 | 1750000520 | S.DIO DAN222TL | T | 42/132 |
| D542 | 1720000590 | S.VCP MA357 (TX) | T | 62.5/139.6 |
| D1101 | 1790000620 | S.DIO MA77 (TX) | T | 177.6/146.6 |
| D1102 | 1790000620 | S.DIO MA77 (TX) | T | 177.6/148.4 |
| D1351 | 1750000581 | S.DIO 1SV307 (TPH3,F) | T | 140.8/71.1 |
| D1653 | 1750000550 | S.DIO 1SS355 TE-17 | T | 138.9/167.2 |
| D1654 | 1750000550 | S.DIO 1SS355 TE-17 | T | 142.5/167.2 |
| D1701 | 1790001670 | S.DIO RB706F-40T106 | T | 170.5/160.8 |
| | | | | |
| L1 | 6200003261 | S.COL NLV32T-101J | T | 10.8/15.4 |
| L2 | 6200003261 | S.COL NLV32T-101J | T | 29/19.9 |
| L10 | 6200003950 | S.COL HF50ACC 322513-T | T | 38.6/14.7 |
| L11 | 6200003950 | S.COL HF50ACC 322513-T | T | 13.8/15.4 |
| L12 | 6200003950 | S.COL HF50ACC 322513-T | T | 16.8/15.4 |
| L13 | 6200003950 | S.COL HF50ACC 322513-T | T | 29/15.4 |
| L20 | 6200003321 | S.COL NLV32T-3R3J | T | 85.9/123.8 |
| L30 | 6200005491 | S.COL NLV32T-331J | T | 20.6/120 |
| L101 | 6200001831 | S.COL NLV32T-100J | T | 38.3/72.8 |
| L151 | 6130002970 | COL LB-343 | | |
| L152 | 6200001831 | S.COL NLV32T-100J | T | 30/54.5 |
| L201 | 6200005011 | S.COL NLV25T-100J | T | 22.2/45 |
| L211 | 6200003661 | S.COL NLV25T-R68J | B | 45.4/35.3 |
| L220 | 6200010790 | S.COL C2520C-3R9G-A | T | 51.9/37.5 |
| L221 | 6190001421 | COL #E526GN-110502 | | |
| L222 | 6200010790 | S.COL C2520C-3R9G-A | T | 76.2/37.7 |
| L230 | 6200010830 | S.COL C2520C-3R3G-A | T | 51.9/50 |
| L231 | 6190001421 | COL #E526GN-110502 | | |
| L232 | 6200010830 | S.COL C2520C-3R3G-A | T | 76.2/50.2 |
| L240 | 6200010830 | S.COL C2520C-3R3G-A | T | 51.9/62.4 |
| L241 | 6190001421 | COL #E526GN-110502 | | |
| L242 | 6200010830 | S.COL C2520C-3R3G-A | T | 76.2/62.7 |
| L250 | 6200010820 | S.COL C2520C-2R7G-A | T | 51.9/74.9 |
| L251 | 6190001421 | COL #E526GN-110502 | | |
| L252 | 6200010820 | S.COL C2520C-2R7G-A | T | 76.2/75.2 |
| L260 | 6200010820 | S.COL C2520C-2R7G-A | T | 51.9/87.4 |
| L261 | 6190001411 | COL #E526GN-110501 | | |
| L262 | 6200010820 | S.COL C2520C-2R7G-A | T | 76.2/87.7 |
| L270 | 6200010810 | S.COL C2520C-2R2G-A | T | 51.9/99.8 |
| L271 | 6190001411 | COL #E526GN-110501 | | |
| L272 | 6200010810 | S.COL C2520C-2R2G-A | T | 76/100.2 |
| L280 | 6200005011 | S.COL NLV25T-100J | T | 67.4/25.5 |
| L302 | 6200001831 | S.COL NLV32T-100J | T | 89.3/42.6 |
| L331 | 6200002641 | S.COL NLV25T-R15J | T | 95.1/34.1 |
| L332 | 6200002411 | S.COL NLV25T-056J | B | 93.2/36 |
| L341 | 6200003261 | S.COL NLV32T-101J | T | 87/39.6 |
| L351 | 6200001831 | S.COL NLV32T-100J | T | 91.3/62 |
| L421 | 6200008641 | S.COL NLV32T-391J | T | 87/81 |
| L441 | 6200002601 | S.COL NLV25T-047J | T | 91.9/72.3 |
| L442 | 6200010730 | S.COL C2520C-68NG-A | T | 90.5/78.2 |
| L451 | 6200002641 | S.COL NLV25T-R15J | T | 95/81 |
| L452 | 6200003261 | S.COL NLV32T-101J | T | 87/78 |
| L501 | 6200001831 | S.COL NLV32T-100J | T | 31/125.8 |
| L530 | 6200003171 | S.COL NLV32T-330J | T | 14.6/134.9 |
| L531 | 6200003171 | S.COL NLV32T-330J | T | 14.6/130.8 |
| L532 | 6200003171 | S.COL NLV32T-330J | T | 15.5/127.1 |
| L541 | 6200010790 | S.COL C2520C-3R9G-A | T | 56.3/139.6 |
| L542 | 6190001421 | COL #E526GN-110502 | | |
| L543 | 6200010790 | S.COL C2520C-3R9G-A | T | 68.4/147.9 |
| L544 | 6200003261 | S.COL NLV32T-101J | B | 65.9/142.1 |
| L545 | 6200003261 | S.COL NLV32T-101J | B | 51.3/139.6 |
| L561 | 6200003261 | S.COL NLV32T-101J | B | 64/156 |
| L562 | 6200001831 | S.COL NLV32T-100J | B | 74.6/151.8 |
| L565 | 6150004250 | COL LS-471A (C-14922) | | |
| L566 | 6150004250 | COL LS-471A (C-14922) | | |
| L591 | 6200007790 | S.COL LQW2BHNR15J03L | T | 60.5/171.5 |
| L651 | 6200001831 | S.COL NLV32T-100J | T | 15.5/176.2 |
| L681 | 6200002981 | T 37.4/176.2 | | |
| L682 | 6200003041 | T 37.8/172.6 | | |
| L683 | 6200003051 | T 40.2/166.2 | | |
| L701 | 6200003261 | S.COL NLV32T-101J | T | 23.6/120 |
| L702 | 6150004971 | S.COL LS-522-LF | T | 37.6/108.6 |
| L703 | 6150004971 | S.COL LS-522-LF | T | 37.5/118.5 |
| L1001 | 6190001650 | COL ELC06D102E | | |
| L1002 | 6140004400 | COL LR-499 | | |
| L1004 | 6140003890 | COL LR-488 | | |
| L1005 | 6180001000 | COL LAL 04NA 102K | | |
| L1006 | 6140003900 | COL LR-489 | | |
| L1007 | 6140003800 | COL LR-439 | | |
| L1008 | 6190001650 | COL ELC06D102E | | |

M.=Mounted side (T: Mounted on the Top side, B: Mounted on the Bottom side)
S.=Surface mount

## [RXPLL-A UNIT]

| REF NO. | ORDER NO. | DESCRIPTION | | M. | H/V LOCATION |
|---|---|---|---|---|---|
| L1009 | 6190001650 | COL | ELC06D102E | | |
| L1010 | 6140003880 | COL | LR-486 | | |
| L1011 | 6140003880 | COL | LR-486 | | |
| L1012 | 6140003800 | COL | LR-439 | | |
| L1013 | 6200010680 | S.COL | C2520C-R22G-A (0.22U) | T | 155/55.2 |
| L1014 | 6200010680 | S.COL | C2520C-R22G-A (0.22U) | T | 157.9/12.4 |
| L1015 | 6200007790 | S.COL | LQW2BHNR15J03L | B | 163.5/27.5 |
| L1052 | 6200010740 | S.COL | C2520C-R27G-A | T | 177.8/74.6 |
| L1053 | 6200010740 | S.COL | C2520C-R27G-A | T | 173.8/73.5 |
| L1054 | 6200010740 | S.COL | C2520C-R27G-A | T | 169.4/72.6 |
| L1055 | 6140003960 | COL | LR-495 | | |
| L1056 | 6200010730 | S.COL | C2520C-68NG-A | T | 171/83.8 |
| L1058 | 6190001631 | COL | #E544EN-100021 | | |
| L1060 | 6200010730 | S.COL | C2520C-68NG-A | T | 149.1/76.4 |
| L1062 | 6200011450 | S.COL | C2520C-R39G-A | T | 145.1/81.4 |
| L1063 | 6200010650 | S.COL | C2520C-R12G-A (0.12U) | T | 140.9/82.5 |
| L1071 | 6200007780 | S.COL | LQW2BHNR12J03L | B | 164.9/79.2 |
| L1072 | 6200007780 | S.COL | LQW2BHNR12J03L | B | 168/76.1 |
| L1091 | 6200003950 | S.COL | HF50ACC 322513-T | B | 171/149 |
| L1092 | 6200003950 | S.COL | HF50ACC 322513-T | T | 149.7/136.5 |
| L1093 | 6200003950 | S.COL | HF50ACC 322513-T | T | 157/135.2 |
| L1101 | 6140003920 | COL | LR-491 | | |
| L1102 | 6200010650 | S.COL | C2520C-R12G-A (0.12U) | T | 176.9/117.9 |
| L1103 | 6180001250 | COL | LAL 04NA 3R3K | | |
| L1104 | 6200010870 | S.COL | C2520C-R33G-A (0.33U) | T | 178.3/135.9 |
| L1105 | 6140003910 | COL | LR-490 | | |
| L1151 | 6140004640 | COL | LR-519 | | |
| L1201 | 6200007780 | S.COL | LQW2BHNR12J03L | B | 119.3/17.4 |
| L1208 | 6140003800 | COL | LR-439 | | |
| L1209 | 6200001831 | S.COL | NLV32T-100J | T | 121.1/20.8 |
| L1210 | 6140004440 | COL | LR-503 | | |
| L1211 | 6200009690 | S.COL | LQH43CN101K03L | T | 115.7/34.6 |
| L1212 | 6200001831 | S.COL | NLV32T-100J | T | 106.8/20.8 |
| L1213 | 6140004440 | COL | LR-503 | | |
| L1214 | 6200009690 | S.COL | LQH43CN101K03L | T | 105.9/34.8 |
| L1216 | 6140003800 | COL | LR-439 | | |
| L1217 | 6200007750 | S.COL | LQW2BHN56NJ03L | T | 147.9/63.7 |
| L1218 | 6200007770 | S.COL | LQW2BHNR10J03L | T | 153.3/65.1 |
| L1219 | 6200007790 | S.COL | LQW2BHNR15J03L | T | 153.2/68.4 |
| L1220 | 6140000930 | COL | LR-116 | | |
| L1221 | 6200003261 | S.COL | NLV32T-101J | B | 149.5/110.9 |
| L1222 | 6150001770 | COL | LS-198 | | |
| L1223 | 6200007750 | S.COL | LQW2BHN56NJ03L | B | 151.3/100.7 |
| L1228 | 6200010870 | S.COL | C2520C-R33G-A (0.33U) | T | 158.7/71.3 |
| L1229 | 6200003950 | S.COL | HF50ACC 322513-T | B | 164.7/115 |
| L1301 | 6200008090 | S.COL | LQW2BHN68NJ03L | T | 157.1/111.9 |
| L1302 | 6200008090 | S.COL | LQW2BHN68NJ03L | T | 156.4/115.5 |
| L1303 | 6200008090 | S.COL | LQW2BHN68NJ03L | T | 153.4/117.5 |
| L1304 | 6200010870 | S.COL | C2520C-R33G-A (0.33U) | T | 153.8/123 |
| L1305 | 6200003001 | S.COL | NLV32T-R22J | T | 159.2/124.5 |
| L1306 | 6200001831 | S.COL | NLV32T-100J | B | 152.7/118.6 |
| L1307 | 6200003001 | S.COL | NLV32T-R22J | T | 153.3/112 |
| L1351 | 6200001831 | S.COL | NLV32T-100J | T | 143/76.4 |
| L1353 | 6200010740 | S.COL | C2520C-R27G-A | T | 141.6/67.5 |
| L1354 | 6200001831 | S.COL | NLV32T-100J | T | 136.4/68 |
| L1401 | 6150004280 | COL | LS-484B (C-14927) | | |
| L1402 | 6150004280 | COL | LS-484B (C-14927) | | |
| L1403 | 6150004280 | COL | LS-484B (C-14927) | | |
| L1404 | 6150004280 | COL | LS-484B (C-14927) | | |
| L1405 | 6200007770 | S.COL | LQW2BHNR10J03L | B | 112.5/111.4 |
| L1406 | 6200007750 | S.COL | LQW2BHN56NJ03L | B | 116.6/111.4 |
| L1407 | 6140003930 | COL | LR-492 | | |
| L1408 | 6190001621 | COL | #E544EN-100028 | | |
| L1409 | 6200003191 | S.COL | NLV32T-470J | B | 135.8/125.4 |
| L1410 | 6150004280 | COL | LS-484B (C-14927) | | |
| L1411 | 6150004280 | COL | LS-484B (C-14927) | | |
| L1501 | 6200003520 | S.COL | ELJFB 102K-F | T | 142.1/145.1 |
| L1652 | 6200002520 | S.COL | ELJNC R18K-F | T | 112.9/133.1 |
| L1653 | 6200001831 | S.COL | NLV32T-100J | B | 105.4/124.6 |
| L1654 | 6200001831 | S.COL | NLV32T-100J | B | 112.4/141.9 |
| L1655 | 6200001831 | S.COL | NLV32T-100J | B | 124.7/139.8 |
| L1701 | 6200001831 | S.COL | NLV32T-100J | T | 167/160 |
| L1702 | 6200003950 | S.COL | HF50ACC 322513-T | T | 175.6/169.8 |
| L1703 | 6200003950 | S.COL | HF50ACC 322513-T | T | 172.6/169.8 |
| L1704 | 6200003950 | S.COL | HF50ACC 322513-T | T | 169.6/169.8 |
| L1705 | 6200003950 | S.COL | HF50ACC 322513-T | T | 165.5/169.8 |
| L1803 | 6200003950 | S.COL | HF50ACC 322513-T | B | 132/54.8 |
| L1804 | 6200003950 | S.COL | HF50ACC 322513-T | B | 118/154.8 |
| L1805 | 6200003950 | S.COL | HF50ACC 322513-T | B | 155.2/132 |
| L1807 | 6200003950 | S.COL | HF50ACC 322513-T | B | 118/151.3 |
| L1808 | 6200003950 | S.COL | HF50ACC 322513-T | B | 141.3/162 |
| L1809 | 6200003950 | S.COL | HF50ACC 322513-T | B | 149.5/115.6 |
| | | | | | |
| R1 | 7030005871 | S.RES | ERA3YKD 104V (100 k) | T | 32.5/19.2 |
| R2 | 7030005321 | S.RES | ERA3YED 103V (10 k) | T | 31.2/19.2 |
| R3 | 7030003550 | S.RES | ERJ3GEYJ 822 V (8.2 k) | T | 16.9/23.5 |
| R4 | 7030003550 | S.RES | ERJ3GEYJ 822 V (8.2 k) | T | 16.9/24.8 |
| R5 | 7030003550 | S.RES | ERJ3GEYJ 822 V (8.2 k) | T | 13.3/31.3 |
| R6 | 7030003550 | S.RES | ERJ3GEYJ 822 V (8.2 k) | T | 13.3/30 |
| R7 | 7030003500 | S.RES | ERJ3GEYJ 332 V (3.3 k) | B | 26.7/12.9 |
| R8 | 7030003470 | S.RES | ERJ3GEYJ 182 V (1.8 k) | B | 28.2/14.6 |
| R9 | 7030003680 | S.RES | ERJ3GEYJ 104 V (100 k) | B | 27.5/10.6 |
| R10 | 7030003360 | S.RES | ERJ3GEYJ 221 V (220) | T | 19/16 |
| R11 | 7030003360 | S.RES | ERJ3GEYJ 221 V (220) | T | 20.3/16 |
| R12 | 7030003360 | S.RES | ERJ3GEYJ 221 V (220) | T | 22.4/16 |
| R13 | 7030003360 | S.RES | ERJ3GEYJ 221 V (220) | T | 23.7/16 |
| R14 | 7030003360 | S.RES | ERJ3GEYJ 221 V (220) | T | 25/16 |
| R15 | 7030003360 | S.RES | ERJ3GEYJ 221 V (220) | T | 26.4/16.2 |
| R16 | 7030003360 | S.RES | ERJ3GEYJ 221 V (220) | T | 32.5/15.4 |
| R17 | 7030003360 | S.RES | ERJ3GEYJ 221 V (220) | T | 33.8/15.4 |
| R30 | 7030003240 | S.RES | ERJ3GEYJ 220 V (22) | T | 21.7/113.7 |
| R31 | 7030003600 | S.RES | ERJ3GEYJ 223 V (22 k) | T | 20.4/111.1 |
| R32 | 7030003320 | S.RES | ERJ3GEYJ 101 V (100) | T | 23/113.7 |

## [RXPLL-A UNIT]

| REF NO. | ORDER NO. | DESCRIPTION | | M. | H/V LOCATION |
|---|---|---|---|---|---|
| R33 | 7030003340 | S.RES | ERJ3GEYJ 151 V (150) | T | 19.1/115 |
| R51 | 7030011030 | S.RES | ERJ1TYJ 270U (27) | T | 66.3/13.9 |
| R61 | 7030011030 | S.RES | ERJ1TYJ 270U (27) | T | 45.1/13.9 |
| R101 | 7030003740 | S.RES | 330K ERJ3GE | T | 34.1/101.5 |
| R103 | 7030007230 | S.RES | ERA3YED 102V (1 k) | T | 25.1/100.3 |
| R104 | 7030007230 | S.RES | ERA3YED 102V (1 k) | T | 26.4/100.3 |
| R105 | 7030007230 | S.RES | ERA3YED 102V (1 k) | T | 27.8/100.3 |
| R106 | 7030003360 | S.RES | ERJ3GEYJ 221 V (220) | T | 29.1/100.3 |
| R107 | 7030003320 | S.RES | ERJ3GEYJ 101 V (100) | T | 38/101.5 |
| R108 | 7030007230 | S.RES | ERA3YED 102V (1 k) | T | 28.9/79 |
| R109 | 7030007230 | S.RES | ERA3YED 102V (1 k) | T | 41.9/84.5 |
| R110 | 7030007220 | S.RES | ERA3YED 202V (2 k) | T | 14.6/100.5 |
| R111 | 7030007220 | S.RES | ERA3YED 202V (2 k) | T | 17.2/100.5 |
| R112 | 7030007220 | S.RES | ERA3YED 202V (2 k) | T | 17.2/99.2 |
| R113 | 7030007220 | S.RES | ERA3YED 202V (2 k) | T | 17.2/97.9 |
| R114 | 7030007220 | S.RES | ERA3YED 202V (2 k) | T | 17.2/96.6 |
| R115 | 7030007220 | S.RES | ERA3YED 202V (2 k) | T | 17.2/95.2 |
| R116 | 7030007220 | S.RES | ERA3YED 202V (2 k) | T | 17.2/93.9 |
| R117 | 7030007220 | S.RES | ERA3YED 202V (2 k) | T | 17.2/92.6 |
| R118 | 7030007200 | S.RES | ERA3YEB 202V (2 k) | T | 17.2/91.3 |
| R119 | 7030007200 | S.RES | ERA3YEB 202V (2 k) | T | 17.2/89.6 |
| R120 | 7030007200 | S.RES | ERA3YEB 202V (2 k) | T | 17.2/87 |
| R121 | 7030007200 | S.RES | ERA3YEB 202V (2 k) | T | 17.2/84.4 |
| R122 | 7030007200 | S.RES | ERA3YEB 202V (2 k) | T | 17.2/81.8 |
| R123 | 7030007230 | S.RES | ERA3YED 102V (1 k) | T | 14.6/99.2 |
| R124 | 7030007230 | S.RES | ERA3YED 102V (1 k) | T | 14.6/97.9 |
| R125 | 7030007230 | S.RES | ERA3YED 102V (1 k) | T | 14.6/96.6 |
| R126 | 7030007230 | S.RES | ERA3YED 102V (1 k) | T | 14.6/95.2 |
| R127 | 7030007230 | S.RES | ERA3YED 102V (1 k) | T | 14.6/93.9 |
| R128 | 7030007230 | S.RES | ERA3YED 102V (1 k) | T | 14.6/92.6 |
| R129 | 7030007210 | S.RES | ERA3YEB 102V (1 k) | T | 14.6/91.3 |
| R130 | 7030007210 | S.RES | ERA3YEB 102V (1 k) | T | 14.6/89.6 |
| R131 | 7030007210 | S.RES | ERA3YEB 102V (1 k) | T | 14.6/88.3 |
| R132 | 7030007210 | S.RES | ERA3YEB 102V (1 k) | T | 14.6/87 |
| R133 | 7030007210 | S.RES | ERA3YEB 102V (1 k) | T | 14.6/85.7 |
| R134 | 7030009861 | S.RES | ERA3YED 471V (470) | T | 14.6/84.4 |
| R135 | 7030003860 | S.RES | ERJ3GE JPW V | T | 30.4/75.8 |
| R136 | 7030003800 | S.RES | ERJ3GEYJ 105 V (1 M) | T | 33/77.1 |
| R137 | 7030003200 | S.RES | ERJ3GEYJ 100 V (10) | T | 35.5/75.8 |
| R138 | 7030003860 | S.RES | ERJ3GE JPW V | T | 16.8/78.6 |
| R139 | 7030003860 | S.RES | ERJ3GE JPW V | T | 17.6/75.8 |
| R150 | 7030003330 | S.RES | ERJ3GEYJ 121 V (120) | B | 37.8/86.2 |
| R151 | 7030003220 | S.RES | ERJ3GEYJ 150 V (15) | B | 38.6/88.1 |
| R152 | 7030005871 | S.RES | ERA3YKD 104V (100 k) | B | 36.2/82.5 |
| R153 | 7030005321 | S.RES | ERA3YED 103V (10 k) | T | 19.2/62.7 |
| R154 | 7030003320 | S.RES | ERJ3GEYJ 101 V (100) | B | 26.3/54.1 |
| R155 | 7030003350 | S.RES | ERJ3GEYJ 181 V (180) | B | 23/54.1 |
| R156 | 7030005871 | S.RES | ERA3YKD 104V (100 k) | T | 24.6/53.1 |
| R157 | 7030005871 | S.RES | ERA3YKD 104V (100 k) | T | 26.9/58 |
| R158 | 7030003340 | S.RES | ERJ3GEYJ 151 V (150) | T | 30/57.3 |
| R159 | 7030003320 | S.RES | ERJ3GEYJ 101 V (100) | B | 33.6/61.4 |
| R160 | 7030003360 | S.RES | ERJ3GEYJ 221 V (220) | B | 33.6/59.6 |
| R161 | 7030003640 | S.RES | ERJ3GEYJ 473 V (47 k) | B | 33.6/54.8 |
| R163 | 7030003220 | S.RES | ERJ3GEYJ 150 V (15) | B | 30.2/56.6 |
| R164 | 7030003310 | S.RES | ERJ3GEYJ 820 V (82) | B | 34.1/70.4 |
| R165 | 7030003320 | S.RES | ERJ3GEYJ 101 V (100) | B | 30.8/70.4 |
| R166 | 7030003320 | S.RES | ERJ3GEYJ 101 V (100) | B | 30.8/72.2 |
| R167 | 7030003240 | S.RES | ERJ3GEYJ 220 V (22) | B | 37.4/75.8 |
| R168 | 7030003360 | S.RES | ERJ3GEYJ 221 V (220) | B | 34.1/75.8 |
| R169 | 7030003640 | S.RES | ERJ3GEYJ 473 V (47 k) | B | 30.8/75.8 |
| R202 | 7030007230 | S.RES | ERA3YED 102V (1 k) | T | 22.2/39.7 |
| R203 | 7030007230 | S.RES | ERA3YED 102V (1 k) | T | 22.2/38.4 |
| R204 | 7030003360 | S.RES | ERJ3GEYJ 221 V (220) | T | 22.2/37.1 |
| R205 | 7030005321 | S.RES | ERA3YED 103V (10 k) | T | 27.4/34 |
| R206 | 7030003220 | S.RES | ERJ3GEYJ 150 V (15) | T | 31.1/45.7 |
| R210 | 7030005351 | S.RES | ERA3YED 182V (1.8 k) | T | 35.6/37.5 |
| R217 | 7030009651 | S.RES | ERA3YHD 820V (82) | B | 40.4/42.8 |
| R219 | 7030009691 | S.RES | ERA3YED 101V (100) | B | 40/35.7 |
| R220 | 7030005871 | S.RES | ERA3YKD 104V (100 k) | T | 73.2/37.6 |
| R221 | 7030005871 | S.RES | ERA3YKD 104V (100 k) | T | 72.3/30.9 |
| R222 | 7030003400 | S.RES | ERJ3GEYJ 471 V (470) | T | 81.4/38.3 |
| R223 | 7030007230 | S.RES | ERA3YED 102V (1 k) | T | 81.9/31.9 |
| R224 | 7030003320 | S.RES | ERJ3GEYJ 101 V (100) | T | 73.2/40.2 |
| R230 | 7030005871 | S.RES | ERA3YKD 104V (100 k) | T | 73.2/50.1 |
| R231 | 7030005871 | S.RES | ERA3YKD 104V (100 k) | T | 72.3/43.3 |
| R232 | 7030003360 | S.RES | ERJ3GEYJ 221 V (220) | T | 81.4/50.8 |
| R233 | 7030007230 | S.RES | ERA3YED 102V (1 k) | T | 81.9/44.4 |
| R234 | 7030003320 | S.RES | ERJ3GEYJ 101 V (100) | T | 73.2/52.7 |
| R240 | 7030005871 | S.RES | ERA3YKD 104V (100 k) | T | 73.2/62.6 |
| R241 | 7030005871 | S.RES | ERA3YKD 104V (100 k) | T | 72.3/55.8 |
| R242 | 7030003360 | S.RES | ERJ3GEYJ 221 V (220) | T | 81.4/63.3 |
| R243 | 7030007230 | S.RES | ERA3YED 102V (1 k) | T | 81.9/56.9 |
| R244 | 7030003320 | S.RES | ERJ3GEYJ 101 V (100) | T | 73.2/65.2 |
| R250 | 7030005871 | S.RES | ERA3YKD 104V (100 k) | T | 73.2/75.1 |
| R251 | 7030005871 | S.RES | ERA3YKD 104V (100 k) | T | 72.3/68.4 |
| R252 | 7030003360 | S.RES | ERJ3GEYJ 221 V (220) | T | 81.4/75.8 |
| R253 | 7030007230 | S.RES | ERA3YED 102V (1 k) | T | 81.9/69.4 |
| R254 | 7030003320 | S.RES | ERJ3GEYJ 101 V (100) | T | 73.2/77.7 |
| R260 | 7030005871 | S.RES | ERA3YKD 104V (100 k) | T | 73.2/87.6 |
| R261 | 7030005871 | S.RES | ERA3YKD 104V (100 k) | T | 72.3/80.9 |
| R262 | 7030003400 | S.RES | ERJ3GEYJ 471 V (470) | T | 81.4/88.3 |
| R263 | 7030007230 | S.RES | ERA3YED 102V (1 k) | T | 81.9/81.9 |
| R264 | 7030003320 | S.RES | ERJ3GEYJ 101 V (100) | T | 73.2/90.2 |
| R270 | 7030005871 | S.RES | ERA3YKD 104V (100 k) | T | 73.2/99.5 |
| R271 | 7030005871 | S.RES | ERA3YKD 104V (100 k) | T | 72.3/92.8 |
| R272 | 7030003360 | S.RES | ERJ3GEYJ 221 V (220) | T | 81.4/100.8 |
| R273 | 7030007230 | S.RES | ERA3YED 102V (1 k) | T | 81.9/93.9 |
| R274 | 7030003320 | S.RES | ERJ3GEYJ 101 V (100) | T | 73.2/102.1 |
| R301 | 7030003200 | S.RES | ERJ3GEYJ 100 V (10) | T | 86.5/30.6 |
| R302 | 7030007230 | S.RES | ERA3YED 102V (1 k) | T | 86.5/29.3 |
| R303 | 7030003360 | S.RES | ERJ3GEYJ 221 V (220) | T | 92.1/28 |
| R304 | 7030003490 | S.RES | ERJ3GEYJ 272 V (2.7 k) | T | 94/30.1 |
| R305 | 7030003510 | S.RES | ERJ3GEYJ 392 V (3.9 k) | T | 95.3/30.1 |
| R306 | 7030003360 | S.RES | ERJ3GEYJ 221 V (220) | T | 94.7/32.2 |

M.=Mounted side (T: Mounted on the Top side, B: Mounted on the Bottom side)
S.=Surface mount

## [RXPLL-A UNIT]

| REF NO. | ORDER NO. | DESCRIPTION | M. | H/V LOCATION |
|---|---|---|---|---|
| R307 | 7030009841 | S.RES ERA3YHD 330V (33) | T | 92.1/32.2 |
| R308 | 7030009851 | S.RES ERA3YED 271V (270) | B | 92.6/43.4 |
| R309 | 7030003540 | S.RES ERJ3GEYJ 682 V (6.8 k) | B | 89.1/47 |
| R310 | 7030003500 | S.RES ERJ3GEYJ 332 V (3.3 k) | B | 92.6/47 |
| R311 | 7030003350 | S.RES ERJ3GEYJ 181 V (180) | B | 89.1/45.2 |
| R312 | 7030003360 | S.RES ERJ3GEYJ 221 V (220) | B | 92.4/27.8 |
| R313 | 7030003490 | S.RES ERJ3GEYJ 272 V (2.7 k) | B | 91.1/23.1 |
| R314 | 7030003510 | S.RES ERJ3GEYJ 392 V (3.9 k) | B | 88.3/23.1 |
| R315 | 7030003360 | S.RES ERJ3GEYJ 221 V (220) | B | 87.5/25.1 |
| R316 | 7030003280 | S.RES ERJ3GEYJ 470 V (47) | B | 78.3/26.1 |
| R317 | 7030006220 | S.RES ERJ12YJ470U (47) | B | 90/31.4 |
| R318 | 7030009841 | S.RES ERA3YHD 330V (33) | B | 92.6/41.6 |
| R341 | 7030007230 | S.RES ERA3YED 102V (1 k) | T | 92.1/40.1 |
| R342 | 7030005321 | S.RES ERA3YED 103V (10 k) | T | 86.5/32.2 |
| R343 | 7030007230 | S.RES ERA3YED 102V (1 k) | T | 89.3/34.8 |
| R351 | 7030003200 | S.RES ERJ3GEYJ 100 V (10) | B | 89.1/52.4 |
| R352 | 7030010980 | S.RES ERA3YHD 470V (47) | T | 89.3/55.8 |
| R353 | 7030009591 | S.RES ERA3YED 472V (4.7 k) | T | 89.3/54.5 |
| R354 | 7030009591 | S.RES ERA3YED 472V (4.7 k) | T | 89.3/50.4 |
| R355 | 7030009591 | S.RES ERA3YED 472V (4.7 k) | T | 89.3/53.2 |
| R356 | 7030003320 | S.RES ERJ3GEYJ 101 V (100) | T | 89.3/57.1 |
| R357 | 7310005580 | S.TRI TMC3ADCS3X 4.7K | T | 93.6/52.7 |
| R358 | 7030010980 | S.RES ERA3YHD 470V (47) | T | 94.9/56.4 |
| R359 | 7030003320 | S.RES ERJ3GEYJ 101 V (100) | T | 94.9/59 |
| R360 | 7030003320 | S.RES ERJ3GEYJ 101 V (100) | B | 92.6/63.9 |
| R361 | 7030003490 | S.RES ERJ3GEYJ 272 V (2.7 k) | B | 89.2/62.1 |
| R362 | 7030003510 | S.RES ERJ3GEYJ 392 V (3.9 k) | B | 92.6/60.3 |
| R363 | 7030003320 | S.RES ERJ3GEYJ 101 V (100) | B | 92.6/65.7 |
| R364 | 7030003410 | S.RES ERJ3GEYJ 561 V (560) | T | 94.9/82.9 |
| R365 | 7030007860 | S.RES ERJ3GEYJ 8R2V (8.2) | T | 92/83.4 |
| R366 | 7030003410 | S.RES ERJ3GEYJ 561 V (560) | T | 94.9/84.2 |
| R368 | 7030005321 | S.RES ERA3YED 103V (10 k) | T | 86.1/59.6 |
| R369 | 7030008240 | S.RES ERJ12Y0R00U | B | 95.3/57.1 |
| R421 | 7030007230 | S.RES ERA3YED 102V (1 k) | T | 92.1/87.8 |
| R425 | 7030003410 | S.RES ERJ3GEYJ 561 V (560) | T | 90.1/81.6 |
| R427 | 7030003320 | S.RES ERJ3GEYJ 101 V (100) | B | 86.8/87.3 |
| R428 | 7030009861 | S.RES ERA3YED 471V (470) | B | 92.1/88 |
| R441 | 7030007230 | S.RES ERA3YED 102V (1 k) | T | 92.1/75.5 |
| R442 | 7030005321 | S.RES ERA3YED 103V (10 k) | T | 88.9/70.9 |
| R443 | 7030007230 | S.RES ERA3YED 102V (1 k) | T | 88.9/72.2 |
| R501 | 7030003360 | S.RES ERJ3GEYJ 221 V (220) | T | 29.2/153.1 |
| R502 | 7030007230 | S.RES ERA3YED 102V (1 k) | T | 27.9/153.1 |
| R503 | 7030007230 | S.RES ERA3YED 102V (1 k) | T | 26.5/153.1 |
| R504 | 7030007230 | S.RES ERA3YED 102V (1 k) | T | 25.2/153.1 |
| R506 | 7030003800 | S.RES ERJ3GEYJ 105 V (1 M) | T | 34/154.5 |
| R509 | 7030007230 | S.RES ERA3YED 102V (1 k) | T | 42.5/136 |
| R510 | 7030007220 | S.RES ERA3YED 202V (2 k) | T | 14.6/153.6 |
| R511 | 7030007220 | S.RES ERA3YED 202V (2 k) | T | 17.2/153.6 |
| R512 | 7030007220 | S.RES ERA3YED 202V (2 k) | T | 17.2/152.3 |
| R513 | 7030007220 | S.RES ERA3YED 202V (2 k) | T | 17.2/151 |
| R514 | 7030007220 | S.RES ERA3YED 202V (2 k) | T | 17.2/149.7 |
| R515 | 7030007220 | S.RES ERA3YED 202V (2 k) | T | 17.2/148.3 |
| R516 | 7030007220 | S.RES ERA3YED 202V (2 k) | T | 17.2/147 |
| R517 | 7030007220 | S.RES ERA3YED 202V (2 k) | T | 17.2/145.7 |
| R518 | 7030007200 | S.RES ERA3YEB 202V (2 k) | T | 17.2/144.4 |
| R519 | 7030007200 | S.RES ERA3YEB 202V (2 k) | T | 17.2/142.7 |
| R520 | 7030007200 | S.RES ERA3YEB 202V (2 k) | T | 17.2/141.4 |
| R521 | 7030007200 | S.RES ERA3YEB 202V (2 k) | T | 17.2/140.1 |
| R522 | 7030007200 | S.RES ERA3YEB 202V (2 k) | T | 17.2/138.8 |
| R523 | 7030007230 | S.RES ERA3YED 102V (1 k) | T | 14.6/152.3 |
| R524 | 7030007230 | S.RES ERA3YED 102V (1 k) | T | 14.6/151 |
| R525 | 7030007230 | S.RES ERA3YED 102V (1 k) | T | 14.6/149.7 |
| R526 | 7030007230 | S.RES ERA3YED 102V (1 k) | T | 14.6/148.3 |
| R527 | 7030007230 | S.RES ERA3YED 102V (1 k) | T | 14.6/147 |
| R528 | 7030007230 | S.RES ERA3YED 102V (1 k) | T | 14.6/145.7 |
| R529 | 7030007210 | S.RES ERA3YEB 102V (1 k) | T | 14.6/144.4 |
| R530 | 7030007210 | S.RES ERA3YEB 102V (1 k) | T | 14.6/142.7 |
| R531 | 7030007210 | S.RES ERA3YEB 102V (1 k) | T | 14.6/141.4 |
| R532 | 7030007210 | S.RES ERA3YEB 102V (1 k) | T | 14.6/140.1 |
| R533 | 7030007210 | S.RES ERA3YEB 102V (1 k) | T | 14.6/138.8 |
| R534 | 7030003860 | S.RES ERJ3GE JPW V | T | 22.2/127.6 |
| R535 | 7030003800 | S.RES ERJ3GEYJ 105 V (1 M) | T | 24.8/129.8 |
| R536 | 7030003200 | S.RES ERJ3GEYJ 100 V (10) | T | 28/128.3 |
| R537 | 7030007230 | S.RES ERA3YED 102V (1 k) | T | 30.3/131.9 |
| R538 | 7030003360 | S.RES ERJ3GEYJ 221 V (220) | B | 34.8/146.5 |
| R540 | 7030007230 | S.RES ERA3YED 102V (1 k) | B | 52.3/142.8 |
| R544 | 7030005871 | S.RES ERA3YKD 104V (100 k) | T | 69.4/140.4 |
| R545 | 7030005871 | S.RES ERA3YKD 104V (100 k) | T | 69.4/139.1 |
| R546 | 7030009861 | S.RES ERA3YED 471V (470) | T | 67.4/150.7 |
| R548 | 7030009591 | S.RES ERA3YED 472V (4.7 k) | B | 43.4/136.5 |
| R550 | 7030009691 | S.RES ERA3YED 101V (100) | B | 43.4/134.7 |
| R554 | 7030009891 | S.RES ERA3YED 151V (150) | B | 47.2/133.9 |
| R555 | 7030003380 | S.RES ERJ3GEYJ 331 V (330) | B | 61.9/142.1 |
| R556 | 7030005981 | S.RES ERA3YED 333V (33 k) | B | 44.2/128.2 |
| R561 | 7030003200 | S.RES ERJ3GEYJ 100 V (10) | T | 71.3/148.5 |
| R562 | 7030003360 | S.RES ERJ3GEYJ 221 V (220) | T | 65.7/155.5 |
| R563 | 7030003490 | S.RES ERJ3GEYJ 272 V (2.7 k) | T | 70.4/151.9 |
| R564 | 7030003510 | S.RES ERJ3GEYJ 392 V (3.9 k) | T | 70.4/150.6 |
| R565 | 7030003360 | S.RES ERJ3GEYJ 221 V (220) | T | 67/155.5 |
| R570 | 7030003230 | S.RES ERJ3GEYJ 180 V (18) | T | 63.1/155.5 |
| R571 | 7030003230 | S.RES ERJ3GEYJ 180 V (18) | T | 58.5/155 |
| R572 | 7030003290 | S.RES ERJ3GEYJ 560 V (56) | B | 57.2/156.3 |
| R580 | 7030009861 | S.RES ERA3YED 471V (470) | T | 41.9/153.7 |
| R581 | 7030003360 | S.RES ERJ3GEYJ 221 V (220) | T | 41.9/145.5 |
| R582 | 7030003600 | S.RES ERJ3GEYJ 223 V (22 k) | T | 41.9/149.5 |
| R591 | 7030003320 | S.RES ERJ3GEYJ 101 V (100) | T | 58.2/169.9 |
| R592 | 7030005321 | S.RES ERA3YED 103V (10 k) | T | 58.5/167.9 |
| R593 | 7030003480 | S.RES ERJ3GEYJ 222 V (2.2 k) | T | 58.5/165.1 |
| R594 | 7030003320 | S.RES ERJ3GEYJ 101 V (100) | B | 61.9/168.1 |
| R595 | 7030003640 | S.RES ERJ3GEYJ 473 V (47 k) | B | 55.9/165.3 |
| R596 | 7030003540 | S.RES ERJ3GEYJ 682 V (6.8 k) | B | 54.7/168.9 |
| R651 | 7030007230 | S.RES ERA3YED 102V (1 k) | B | 23.5/177.1 |
| R652 | 7030003360 | S.RES ERJ3GEYJ 221 V (220) | T | 13.5/170.8 |
| R653 | 7030007230 | S.RES ERA3YED 102V (1 k) | T | 13.5/169.5 |

## [RXPLL-A UNIT]

| REF NO. | ORDER NO. | DESCRIPTION | M. | H/V LOCATION |
|---|---|---|---|---|
| R654 | 7030007230 | S.RES ERA3YED 102V (1 k) | T | 13.5/168.2 |
| R656 | 7030003800 | S.RES ERJ3GEYJ 105 V (1 M) | T | 13.4/165.6 |
| R657 | 7030003320 | S.RES ERJ3GEYJ 101 V (100) | T | 20.2/161.4 |
| R661 | 7030007220 | S.RES ERA3YED 202V (2 k) | T | 31.7/162.8 |
| R662 | 7030007220 | S.RES ERA3YED 202V (2 k) | T | 31.7/164.1 |
| R663 | 7030007220 | S.RES ERA3YED 202V (2 k) | T | 31.7/165.4 |
| R664 | 7030007220 | S.RES ERA3YED 202V (2 k) | T | 31.7/166.7 |
| R665 | 7030007220 | S.RES ERA3YED 202V (2 k) | T | 31.7/168 |
| R666 | 7030007220 | S.RES ERA3YED 202V (2 k) | T | 31.7/169.3 |
| R667 | 7030007220 | S.RES ERA3YED 202V (2 k) | T | 31.7/170.6 |
| R668 | 7030007220 | S.RES ERA3YED 202V (2 k) | T | 31.7/171.9 |
| R669 | 7030007200 | S.RES ERA3YEB 202V (2 k) | T | 31.7/173.2 |
| R670 | 7030007200 | S.RES ERA3YEB 202V (2 k) | T | 31.7/174.5 |
| R671 | 7030007200 | S.RES ERA3YEB 202V (2 k) | T | 31.7/175.8 |
| R673 | 7030007230 | S.RES ERA3YED 102V (1 k) | T | 34.3/165.4 |
| R674 | 7030007230 | S.RES ERA3YED 102V (1 k) | T | 34.3/166.7 |
| R675 | 7030007230 | S.RES ERA3YED 102V (1 k) | T | 34.3/168 |
| R676 | 7030007230 | S.RES ERA3YED 102V (1 k) | T | 34.3/169.3 |
| R677 | 7030007230 | S.RES ERA3YED 102V (1 k) | T | 34.3/170.6 |
| R678 | 7030007230 | S.RES ERA3YED 102V (1 k) | T | 34.3/171.9 |
| R679 | 7030007210 | S.RES ERA3YEB 102V (1 k) | T | 34.3/173.2 |
| R680 | 7030007210 | S.RES ERA3YEB 102V (1 k) | T | 34.3/174.5 |
| R681 | 7030007210 | S.RES ERA3YEB 102V (1 k) | T | 34.3/175.8 |
| R685 | 7030003460 | S.RES ERJ3GEYJ 152 V (1.5 k) | T | 38.4/169.7 |
| R686 | 7030003320 | S.RES ERJ3GEYJ 101 V (100) | T | 40.3/163.4 |
| R687 | 7030003470 | S.RES ERJ3GEYJ 182 V (1.8 k) | T | 37.4/165.1 |
| R688 | 7030003480 | S.RES ERJ3GEYJ 222 V (2.2 k) | T | 34.3/162.8 |
| R689 | 7030003360 | S.RES ERJ3GEYJ 221 V (220) | T | 33.6/161.5 |
| R690 | 7030009851 | S.RES ERA3YED 271V (270) | T | 46.4/165.3 |
| R691 | 7030003230 | S.RES ERJ3GEYJ 180 V (18) | T | 48.4/164.8 |
| R692 | 7030009851 | S.RES ERA3YED 271V (270) | T | 46.4/166.6 |
| R704 | 7030009841 | S.RES ERA3YHD 330V (33) | T | 30.8/113.7 |
| R705 | 7030003600 | S.RES ERJ3GEYJ 223 V (22 k) | T | 29.5/113.7 |
| R706 | 7030005321 | S.RES ERA3YED 103V (10 k) | T | 28.2/113.7 |
| R707 | 7030009861 | S.RES ERA3YED 471V (470) | T | 30.8/108.1 |
| R708 | 7030003410 | S.RES ERJ3GEYJ 561 V (560) | T | 43.3/118.8 |
| R709 | 7030007860 | S.RES ERJ3GEYJ 8R2V (8.2) | T | 43.3/116 |
| R710 | 7030003410 | S.RES ERJ3GEYJ 561 V (560) | T | 43.8/121.1 |
| R711 | 7030003320 | S.RES ERJ3GEYJ 101 V (100) | T | 37.9/154.5 |
| R1000 | 7030003320 | S.RES ERJ3GEYJ 101 V (100) | B | 177.1/11.2 |
| R1003 | 7030010980 | S.RES ERA3YHD 470V (47) | T | 162/13.4 |
| R1004 | 7030007230 | S.RES ERA3YED 102V (1 k) | B | 166.4/12.9 |
| R1005 | 7030003550 | S.RES ERJ3GEYJ 822 V (8.2 k) | T | 144/26.1 |
| R1006 | 7030007230 | S.RES ERA3YED 102V (1 k) | T | 145.3/26.1 |
| R1007 | 7030004030 | S.RES ERJ3GEYJ 5R6 V (5.6) | B | 153.7/33.6 |
| R1008 | 7030003240 | S.RES ERJ3GEYJ 220 V (22) | T | 144/36.4 |
| R1009 | 7030010980 | S.RES ERA3YHD 470V (47) | T | 182.4/29.3 |
| R1010 | 7030010980 | S.RES ERA3YHD 470V (47) | T | 154.5/33.2 |
| R1013 | 7030007230 | S.RES ERA3YED 102V (1 k) | B | 172.7/40.8 |
| R1014 | 7030007230 | S.RES ERA3YED 102V (1 k) | B | 156.7/40.8 |
| R1015 | 7030003530 | S.RES ERJ3GEYJ 562 V (5.6 k) | B | 172.7/45.4 |
| R1016 | 7030003530 | S.RES ERJ3GEYJ 562 V (5.6 k) | B | 156.7/45.4 |
| R1017 | 7030003530 | S.RES ERJ3GEYJ 562 V (5.6 k) | B | 169.7/12.9 |
| R1020 | 7030003390 | S.RES ERJ3GEYJ 391 V (390) | T | 179.6/18.3 |
| R1021 | 7030003220 | S.RES ERJ3GEYJ 150 V (15) | T | 177/19.4 |
| R1022 | 7030003390 | S.RES ERJ3GEYJ 391 V (390) | T | 180.9/19.4 |
| R1023 | 7030010980 | S.RES ERA3YHD 470V (47) | B | 149.3/33.5 |
| R1024 | 7030003200 | S.RES ERJ3GEYJ 100 V (10) | B | 150.1/31.4 |
| R1025 | 7030003300 | S.RES ERJ3GEYJ 680 V (68) | T | 178.3/19.4 |
| R1026 | 7030003480 | S.RES ERJ3GEYJ 222 V (2.2 k) | B | 171.2/14.2 |
| R1027 | 7030003200 | S.RES ERJ3GEYJ 100 V (10) | B | 176.5/38.3 |
| R1028 | 7030003200 | S.RES ERJ3GEYJ 100 V (10) | B | 160.5/38.3 |
| R1029 | 7030010980 | S.RES ERA3YHD 470V (47) | B | 178.2/46.1 |
| R1030 | 7030010980 | S.RES ERA3YHD 470V (47) | B | 162.2/46.1 |
| R1051 | 7030003800 | S.RES ERJ3GEYJ 105 V (1 M) | T | 178.6/93.1 |
| R1054 | 7030011500 | S.RES ERA3YHD 270V (27) | T | 149.1/83.2 |
| R1055 | 7030000010 | S.RES MCR10EZHJ JPW (000) | T | 162.1/76.6 |
| R1056 | 7030000010 | S.RES MCR10EZHJ JPW (000) | T | 177.5/71.1 |
| R1071 | 7030010980 | S.RES ERA3YHD 470V (47) | B | 165.9/76.4 |
| R1072 | 7030000010 | S.RES MCR10EZHJ JPW (000) | T | 133.9/84.1 |
| R1073 | 7030000010 | S.RES MCR10EZHJ JPW (000) | T | 135.5/85.7 |
| R1101 | 7310004860 | S.TRI EVM-3YSX50 B53 (502) | T | 180.1/90.2 |
| R1102 | 7030005871 | S.RES ERA3YKD 104V (100 k) | B | 180.2/100.6 |
| R1103 | 7030007680 | S.RES ERJ8ENF 47R0V (47) | T | 181.7/104.7 |
| R1104 | 7030007680 | S.RES ERJ8ENF 47R0V (47) | T | 173.6/107.2 |
| R1105 | 7030003500 | S.RES ERJ3GEYJ 332 V (3.3 k) | T | 176.7/87.7 |
| R1106 | 7030009620 | S.RES ERJ12YJ120U (12) | B | 179.6/117.9 |
| R1107 | 7030010980 | S.RES ERA3YHD 470V (47) | T | 175.6/120.3 |
| R1109 | 7030007180 | S.RES ERJ12YJ150U (15) | B | 176.5/125.7 |
| R1110 | 7030003480 | S.RES ERJ3GEYJ 222 V (2.2 k) | B | 168.5/131.6 |
| R1111 | 7030003480 | S.RES ERJ3GEYJ 222 V (2.2 k) | T | 166.2/130.4 |
| R1113 | 7030003480 | S.RES ERJ3GEYJ 222 V (2.2 k) | T | 166.2/131.7 |
| R1114 | 7030004040 | S.RES ERJ3GEYJ 4R7 V (4.7) | T | 179.2/125.3 |
| R1115 | 7030006240 | S.RES ERJ12YJ181U (180) | B | 176.5/129.9 |
| R1116 | 7030007230 | S.RES ERA3YED 102V (1 k) | T | 175.7/135.3 |
| R1117 | 7030004040 | S.RES ERJ3GEYJ 4R7 V (4.7) | T | 175.7/134 |
| R1118 | 7030003480 | S.RES ERJ3GEYJ 222 V (2.2 k) | T | 175.4/132 |
| R1119 | 7030003470 | S.RES ERJ3GEYJ 182 V (1.8 k) | T | 178/132 |
| R1120 | 7030006070 | S.RES ERJ12YJ101U (100) | B | 177.3/141 |
| R1121 | 7030003240 | S.RES ERJ3GEYJ 220 V (22) | T | 178.6/139.6 |
| R1122 | 7030010980 | S.RES ERA3YHD 470V (47) | T | 171.9/131.1 |
| R1123 | 7030003480 | S.RES ERJ3GEYJ 222 V (2.2 k) | T | 165.7/137.4 |
| R1124 | 7030003460 | S.RES ERJ3GEYJ 152 V (1.5 k) | T | 165.7/140 |
| R1125 | 7030003420 | S.RES ERJ3GEYJ 681 V (680) | B | 171/142.2 |
| R1126 | 7030003200 | S.RES ERJ3GEYJ 100 V (10) | T | 168.4/142.2 |
| R1127 | 7030010980 | S.RES ERA3YHD 470V (47) | T | 174.6/142.9 |
| R1128 | 7030003470 | S.RES ERJ3GEYJ 182 V (1.8 k) | T | 174.6/146.6 |
| R1129 | 7030003470 | S.RES ERJ3GEYJ 182 V (1.8 k) | T | 174.6/148.4 |
| R1130 | 7030003480 | S.RES ERJ3GEYJ 222 V (2.2 k) | T | 180.6/146.4 |
| R1131 | 7030003640 | S.RES ERJ3GEYJ 473 V (47 k) | B | 177.4/90.7 |
| R1132 | 7310004860 | S.TRI EVM-3YSX50 B53 (502) | T | 179.4/84.3 |
| R1133 | 7030003500 | S.RES ERJ3GEYJ 332 V (3.3 k) | T | 175.5/82.5 |
| R1134 | 7030003640 | S.RES ERJ3GEYJ 473 V (47 k) | T | 175.5/83.8 |
| R1135 | 7030005871 | S.RES ERA3YKD 104V (100 k) | T | 182.2/97.8 |

M.=Mounted side (T: Mounted on the Top side, B: Mounted on the Bottom side)
S.=Surface mount

## [RXPLL-A UNIT]

| REF NO. | ORDER NO. | DESCRIPTION | M. | H/V LOCATION |
|---|---|---|---|---|
| R1151 | 7030003280 | S.RES ERJ3GEYJ 470 V (47) | T | 134.8/63.9 |
| R1152 | 7030003280 | S.RES ERJ3GEYJ 470 V (47) | B | 117.2/56.3 |
| R1203 | 7030000010 | S.RES MCR10EZHJ JPW (000) | T | 157.5/74.9 |
| R1211 | 7030003860 | S.RES ERJ3GE JPW V | T | 117.6/7.8 |
| R1212 | 7030003860 | S.RES ERJ3GE JPW V | T | 124.8/51.1 |
| R1213 | 7030003200 | S.RES ERJ3GEYJ 100 V (10) | B | 118.8/25 |
| R1214 | 7030003200 | S.RES ERJ3GEYJ 100 V (10) | B | 109/25 |
| R1216 | 7030010980 | S.RES ERA3YHD 470V (47) | B | 120.7/31.6 |
| R1217 | 7030010980 | S.RES ERA3YHD 470V (47) | B | 111.2/31.6 |
| R1220 | 7030010980 | S.RES ERA3YHD 470V (47) | T | 118.7/17.3 |
| R1221 | 7030007230 | S.RES ERA3YED 102V (1 k) | T | 116.4/39.9 |
| R1222 | 7030003530 | S.RES ERJ3GEYJ 562 V (5.6 k) | T | 116.4/38.6 |
| R1223 | 7030010980 | S.RES ERA3YHD 470V (47) | T | 109.3/17.1 |
| R1224 | 7030007230 | S.RES ERA3YED 102V (1 k) | T | 106.6/39.9 |
| R1225 | 7030003530 | S.RES ERJ3GEYJ 562 V (5.6 k) | T | 106.6/38.6 |
| R1226 | 7030003410 | S.RES ERJ3GEYJ 561 V (560) | T | 158.9/92.9 |
| R1227 | 7030003410 | S.RES ERJ3GEYJ 561 V (560) | T | 154/92.9 |
| R1228 | 7310004860 | S.TRI EVM-3YSX50 B53 (502) | T | 156.4/92.9 |
| R1229 | 7030003480 | S.RES ERJ3GEYJ 222 V (2.2 k) | B | 156.1/117.4 |
| R1230 | 7030003480 | S.RES ERJ3GEYJ 222 V (2.2 k) | B | 156.1/119.2 |
| R1231 | 7030003480 | S.RES ERJ3GEYJ 222 V (2.2 k) | B | 156.1/121 |
| R1232 | 7030003600 | S.RES ERJ3GEYJ 223 V (22 k) | T | 156.3/97.5 |
| R1233 | 7030010980 | S.RES ERA3YHD 470V (47) | B | 152.5/109.4 |
| R1301 | 7030010980 | S.RES ERA3YHD 470V (47) | B | 155.7/97.5 |
| R1302 | 7030003860 | S.RES ERJ3GE JPW V | T | 159.3/116.8 |
| R1304 | 7030003620 | S.RES ERJ3GEYJ 333 V (33 k) | T | 156.5/123.2 |
| R1306 | 7030006230 | S.RES ERJ12YJ151U (150) | B | 153.8/124.8 |
| R1307 | 7030003300 | S.RES ERJ3GEYJ 680 V (68) | T | 156.5/128.4 |
| R1311 | 7030000010 | S.RES MCR10EZHJ JPW (000) | T | 140.3/98.8 |
| R1312 | 7030000010 | S.RES MCR10EZHJ JPW (000) | T | 143.2/104.1 |
| R1313 | 7030000010 | S.RES MCR10EZHJ JPW (000) | T | 143.2/101.5 |
| R1357 | 7030007230 | S.RES ERA3YED 102V (1 k) | B | 140.7/70.4 |
| R1358 | 7030003530 | S.RES ERJ3GEYJ 562 V (5.6 k) | B | 142.8/70.4 |
| R1359 | 7030010980 | S.RES ERA3YHD 470V (47) | T | 139.4/64.7 |
| R1360 | 7030007230 | S.RES ERA3YED 102V (1 k) | B | 146.4/67.1 |
| R1361 | 7030003380 | S.RES ERJ3GEYJ 331 V (330) | T | 139.3/68.8 |
| R1362 | 7030005871 | S.RES ERA3YKD 104V (100 k) | B | 144.6/70.4 |
| R1401 | 7030003200 | S.RES ERJ3GEYJ 100 V (10) | T | 131.5/103.3 |
| R1402 | 7030003300 | S.RES ERJ3GEYJ 680 V (68) | T | 126.4/111 |
| R1403 | 7030007230 | S.RES ERA3YED 102V (1 k) | T | 132/107.7 |
| R1404 | 7030009861 | S.RES ERA3YED 471V (470) | T | 134.6/104.3 |
| R1405 | 7030003340 | S.RES ERJ3GEYJ 151 V (150) | T | 137.2/104.3 |
| R1406 | 7030009591 | S.RES ERA3YED 472V (4.7 k) | T | 135.2/106.2 |
| R1407 | 7030003550 | S.RES ERJ3GEYJ 822 V (8.2 k) | B | 135.4/104.3 |
| R1408 | 7030003200 | S.RES ERJ3GEYJ 100 V (10) | T | 120.9/109 |
| R1409 | 7030009591 | S.RES ERA3YED 472V (4.7 k) | T | 120.5/114.9 |
| R1410 | 7030006091 | S.RES ERA3YED 822V (8.2 k) | B | 124.2/114.4 |
| R1411 | 7030005871 | S.RES ERA3YKD 104V (100 k) | T | 123.2/116.2 |
| R1412 | 7030003200 | S.RES ERJ3GEYJ 100 V (10) | T | 126.4/112.3 |
| R1413 | 7030003200 | S.RES ERJ3GEYJ 100 V (10) | T | 126.4/113.6 |
| R1414 | 7030005871 | S.RES ERA3YKD 104V (100 k) | B | 120.9/114.4 |
| R1415 | 7030010980 | S.RES ERA3YHD 470V (47) | T | 127/114.9 |
| R1416 | 7030003320 | S.RES ERJ3GEYJ 101 V (100) | B | 139.7/122.9 |
| R1417 | 7030000010 | S.RES MCR10EZHJ JPW (000) | B | 130.1/124.5 |
| R1418 | 7030000010 | S.RES MCR10EZHJ JPW (000) | B | 130.1/122.5 |
| R1419 | 7030003860 | S.RES ERJ3GE JPW V | B | 129.4/114.9 |
| R1501 | 7030010980 | S.RES ERA3YHD 470V (47) | T | 126.5/125.2 |
| R1502 | 7030009841 | S.RES ERA3YHD 330V (33) | T | 133/131 |
| R1503 | 7030009851 | S.RES ERA3YED 271V (270) | T | 130/146.3 |
| R1504 | 7030011050 | S.RES ERA3YHD 100V (10) | T | 131.3/143.5 |
| R1505 | 7030006091 | S.RES ERA3YED 822V (8.2 k) | B | 137.7/140.3 |
| R1506 | 7030007230 | S.RES ERA3YED 102V (1 k) | B | 137.7/147 |
| R1507 | 7030007230 | S.RES ERA3YED 102V (1 k) | T | 132.6/146.3 |
| R1508 | 7030007230 | S.RES ERA3YED 102V (1 k) | T | 133.9/146.3 |
| R1509 | 7030007230 | S.RES ERA3YED 102V (1 k) | T | 139.1/158.9 |
| R1510 | 7030005321 | S.RES ERA3YED 103V (10 k) | T | 139.1/157.6 |
| R1511 | 7030009861 | S.RES ERA3YED 471V (470) | T | 136.5/157.6 |
| R1512 | 7030003380 | S.RES ERJ3GEYJ 331 V (330) | T | 129.6/151.6 |
| R1513 | 7030003380 | S.RES ERJ3GEYJ 331 V (330) | T | 129.6/155.5 |
| R1514 | 7030005321 | S.RES ERA3YED 103V (10 k) | T | 129.6/160.8 |
| R1515 | 7030005321 | S.RES ERA3YED 103V (10 k) | T | 133.5/160.8 |
| R1516 | 7310005610 | S.TRI TMC3ADC13X 1K | T | 119.2/157.7 |
| R1517 | 7030005321 | S.RES ERA3YED 103V (10 k) | T | 115.3/158 |
| R1518 | 7030005321 | S.RES ERA3YED 103V (10 k) | T | 134.8/160.8 |
| R1519 | 7030005321 | S.RES ERA3YED 103V (10 k) | T | 131.7/171.7 |
| R1520 | 7030005321 | S.RES ERA3YED 103V (10 k) | T | 136.1/160.8 |
| R1521 | 7030010980 | S.RES ERA3YHD 470V (47) | T | 126.5/133 |
| R1522 | 7030009841 | S.RES ERA3YHD 330V (33) | T | 126/141.1 |
| R1523 | 7030009851 | S.RES ERA3YED 271V (270) | T | 123.7/146.3 |
| R1524 | 7030011050 | S.RES ERA3YHD 100V (10) | T | 122.4/143.5 |
| R1525 | 7030007230 | S.RES ERA3YED 102V (1 k) | B | 128.8/147 |
| R1526 | 7030003460 | S.RES ERJ3GEYJ 152 V (1.5 k) | B | 137.7/142.1 |
| R1527 | 7030007230 | S.RES ERA3YED 102V (1 k) | T | 119.8/146.3 |
| R1528 | 7030007230 | S.RES ERA3YED 102V (1 k) | T | 121.1/146.3 |
| R1529 | 7030007230 | S.RES ERA3YED 102V (1 k) | T | 115.3/152.3 |
| R1530 | 7030003380 | S.RES ERJ3GEYJ 331 V (330) | T | 128/151.6 |
| R1531 | 7030003380 | S.RES ERJ3GEYJ 331 V (330) | T | 128/155.5 |
| R1532 | 7030005321 | S.RES ERA3YED 103V (10 k) | T | 124.1/160.8 |
| R1533 | 7030005321 | S.RES ERA3YED 103V (10 k) | T | 128/160.8 |
| R1534 | 7030005321 | S.RES ERA3YED 103V (10 k) | T | 122.8/160.8 |
| R1535 | 7030005321 | S.RES ERA3YED 103V (10 k) | T | 121.5/160.8 |
| R1536 | 7030005321 | S.RES ERA3YED 103V (10 k) | T | 129/171.7 |
| R1537 | 7030003320 | S.RES ERJ3GEYJ 101 V (100) | T | 115.5/164.5 |
| R1538 | 7030003320 | S.RES ERJ3GEYJ 101 V (100) | T | 107.1/170.1 |
| R1539 | 7030008061 | S.RES ERA3YED 222V (2.2 k) | B | 131.8/176.4 |
| R1540 | 7030010390 | S.RES ERA3YED 821V (820) | B | 128.7/177.1 |
| R1541 | 7030003320 | S.RES ERJ3GEYJ 101 V (100) | T | 107.1/178.8 |
| R1542 | 7030003320 | S.RES ERJ3GEYJ 101 V (100) | T | 115.5/173.2 |
| R1543 | 7030009691 | S.RES ERA3YED 101V (100) | B | 130.6/179 |
| R1651 | 7030003380 | S.RES ERJ3GEYJ 331 V (330) | B | 100.9/144.8 |
| R1652 | 7030003220 | S.RES ERJ3GEYJ 150 V (15) | B | 102.7/144.8 |
| R1653 | 7030003380 | S.RES ERJ3GEYJ 331 V (330) | B | 101.9/142.9 |
| R1654 | 7030010980 | S.RES ERA3YHD 470V (47) | B | 105.5/142.2 |
| R1655 | 7030009861 | S.RES ERA3YED 471V (470) | B | 108.8/140 |

## [RXPLL-A UNIT]

| REF NO. | ORDER NO. | DESCRIPTION | M. | H/V LOCATION |
|---|---|---|---|---|
| R1656 | 7030003630 | S.RES ERJ3GEYJ 393 V (39 k) | B | 108.3/142.2 |
| R1657 | 7030005871 | S.RES ERA3YKD 104V (100 k) | T | 108/133.1 |
| R1658 | 7030003320 | S.RES ERJ3GEYJ 101 V (100) | T | 110.6/133.1 |
| R1659 | 7030009691 | S.RES ERA3YED 101V (100) | T | 115.8/124.9 |
| R1660 | 7030009691 | S.RES ERA3YED 101V (100) | T | 115.8/128.7 |
| R1661 | 7030005321 | S.RES ERA3YED 103V (10 k) | T | 135.1/175.4 |
| R1662 | 7030005321 | S.RES ERA3YED 103V (10 k) | T | 135.2/172.8 |
| R1663 | 7030005321 | S.RES ERA3YED 103V (10 k) | T | 144.3/175.4 |
| R1664 | 7030005321 | S.RES ERA3YED 103V (10 k) | T | 139.9/172.1 |
| R1665 | 7030003320 | S.RES ERJ3GEYJ 101 V (100) | T | 109.3/133.1 |
| R1667 | 7030003360 | S.RES ERJ3GEYJ 221 V (220) | T | 139.2/170.2 |
| R1668 | 7030003360 | S.RES ERJ3GEYJ 221 V (220) | T | 141.8/170.2 |
| R1670 | 7030003800 | S.RES ERJ3GEYJ 105 V (1 M) | T | 140.2/164.1 |
| R1673 | 7030007230 | S.RES ERA3YED 102V (1 k) | B | 146/174.5 |
| R1674 | 7030009851 | S.RES ERA3YED 271V (270) | B | 145.1/177.1 |
| R1675 | 7030009591 | S.RES ERA3YED 472V (4.7 k) | T | 136.6/170.2 |
| R1677 | 7030009591 | S.RES ERA3YED 472V (4.7 k) | T | 143.1/170.2 |
| R1701 | 7030003360 | S.RES ERJ3GEYJ 221 V (220) | T | 162.4/147.4 |
| R1703 | 7030003360 | S.RES ERJ3GEYJ 221 V (220) | T | 159.8/147.4 |
| R1704 | 7030003360 | S.RES ERJ3GEYJ 221 V (220) | T | 158.5/147.4 |
| R1706 | 7030003360 | S.RES ERJ3GEYJ 221 V (220) | T | 155.9/147.4 |
| R1707 | 7030003360 | S.RES ERJ3GEYJ 221 V (220) | T | 154.6/147.4 |
| R1708 | 7030003360 | S.RES ERJ3GEYJ 221 V (220) | T | 153.3/147.4 |
| R1709 | 7030003480 | S.RES ERJ3GEYJ 222 V (2.2 k) | T | 149.7/159.3 |
| R1710 | 7030003480 | S.RES ERJ3GEYJ 222 V (2.2 k) | T | 148.4/159.3 |
| R1711 | 7030003540 | S.RES ERJ3GEYJ 682 V (6.8 k) | T | 147.1/159.3 |
| R1712 | 7030003540 | S.RES ERJ3GEYJ 682 V (6.8 k) | T | 145.8/159.3 |
| R1713 | 7030003660 | S.RES ERJ3GEYJ 683 V (68 k) | T | 145.8/157.2 |
| R1714 | 7030003660 | S.RES ERJ3GEYJ 683 V (68 k) | T | 145.8/155.9 |
| R1715 | 7030003540 | S.RES ERJ3GEYJ 682 V (6.8 k) | T | 143.9/164.8 |
| R1716 | 7030007230 | S.RES ERA3YED 102V (1 k) | T | 164.2/164.8 |
| R1717 | 7030007230 | S.RES ERA3YED 102V (1 k) | T | 164.2/163.5 |
| R1718 | 7030007230 | S.RES ERA3YED 102V (1 k) | T | 164.2/162.2 |
| R1719 | 7030003660 | S.RES ERJ3GEYJ 683 V (68 k) | T | 144.3/166.8 |
| C1 | 4030011600 | S.CER C1608 JB 1E 104K-T | T | 10.8/18.2 |
| C2 | 4030006880 | S.CER C1608 JB 1H 472K-T | T | 25.7/29.5 |
| C14 | 4030006880 | S.CER C1608 JB 1H 472K-T | T | 37.7/12.5 |
| C15 | 4030006880 | S.CER C1608 JB 1H 472K-T | T | 31.2/15.4 |
| C16 | 4030006880 | S.CER C1608 JB 1H 472K-T | T | 35.1/15.4 |
| C17 | 4030006880 | S.CER C1608 JB 1H 472K-T | T | 13.8/12.6 |
| C18 | 4030006880 | S.CER C1608 JB 1H 472K-T | T | 16.8/12.6 |
| C19 | 4030006880 | S.CER C1608 JB 1H 472K-T | T | 29.5/12.6 |
| C20 | 4030006880 | S.CER C1608 JB 1H 472K-T | T | 87.4/127.8 |
| C21 | 4030006880 | S.CER C1608 JB 1H 472K-T | T | 88.7/127.8 |
| C22 | 4030006880 | S.CER C1608 JB 1H 472K-T | T | 90/127.8 |
| C30 | 4030011600 | S.CER C1608 JB 1E 104K-T | T | 19.1/112.4 |
| C31 | 4030011600 | S.CER C1608 JB 1E 104K-T | T | 20.4/113.7 |
| C32 | 4030011600 | S.CER C1608 JB 1E 104K-T | T | 24.3/111.1 |
| C51 | 4510008520 | S.ELE EEE1CA470SP | T | 84/20.3 |
| C52 | 4030011600 | S.CER C1608 JB 1E 104K-T | T | 78.9/23.7 |
| C53 | 4030011600 | S.CER C1608 JB 1E 104K-T | T | 75.1/23.7 |
| C54 | 4510008500 | S.ELE EEE1CA101WP | T | 70/20.3 |
| C61 | 4510008520 | S.ELE EEE1CA470SP | T | 62.9/20.3 |
| C62 | 4030011600 | S.CER C1608 JB 1E 104K-T | B | 58.2/19.9 |
| C63 | 4030011600 | S.CER C1608 JB 1E 104K-T | B | 54.8/19.9 |
| C64 | 4510008500 | S.ELE EEE1CA101WP | T | 50.1/20.3 |
| C101 | 4030006880 | S.CER C1608 JB 1H 472K-T | T | 39.7/80.7 |
| C102 | 4030011600 | S.CER C1608 JB 1E 104K-T | T | 41.8/79.9 |
| C103 | 4510008540 | S.ELE EEE1CA100SR | T | 40.2/76.8 |
| C104 | 4030011600 | S.CER C1608 JB 1E 104K-T | T | 21.4/100.2 |
| C105 | 4030011600 | S.CER C1608 JB 1E 104K-T | T | 21.4/88.2 |
| C106 | 4030011600 | S.CER C1608 JB 1E 104K-T | T | 21.4/84.4 |
| C107 | 4030011600 | S.CER C1608 JB 1E 104K-T | T | 24.4/79.8 |
| C108 | 4030011600 | S.CER C1608 JB 1E 104K-T | T | 27/79.8 |
| C109 | 4030011600 | S.CER C1608 JB 1E 104K-T | T | 30.8/79.8 |
| C110 | 4030011600 | S.CER C1608 JB 1E 104K-T | T | 36.8/79.8 |
| C111 | 4030011600 | S.CER C1608 JB 1E 104K-T | T | 41.2/88.5 |
| C112 | 4030011600 | S.CER C1608 JB 1E 104K-T | T | 41.3/82.6 |
| C114 | 4030011600 | S.CER C1608 JB 1E 104K-T | T | 39.5/98.4 |
| C115 | 4030011600 | S.CER C1608 JB 1E 104K-T | T | 38.1/98.4 |
| C116 | 4030011600 | S.CER C1608 JB 1E 104K-T | T | 35.3/99.6 |
| C117 | 4030011600 | S.CER C1608 JB 1E 104K-T | T | 23.3/98.8 |
| C118 | 4030011600 | S.CER C1608 JB 1E 104K-T | T | 42.6/82.6 |
| C120 | 4030006880 | S.CER C1608 JB 1H 472K-T | T | 36.7/101.5 |
| C121 | 4030011600 | S.CER C1608 JB 1E 104K-T | T | 39.5/101.5 |
| C125 | 4030011600 | S.CER C1608 JB 1E 104K-T | T | 14.6/83.1 |
| C129 | 4030011600 | S.CER C1608 JB 1E 104K-T | T | 33.4/79.8 |
| C130 | 4030017810 | S.CER C1608 CH 1H 102J-T | B | 47.6/106.6 |
| C131 | 4030011600 | S.CER C1608 JB 1E 104K-T | T | 30.4/73.2 |
| C132 | 4030011600 | S.CER C1608 JB 1E 104K-T | T | 35.5/73.2 |
| C133 | 4030006880 | S.CER C1608 JB 1H 472K-T | B | 43.5/98.6 |
| C134 | 4030006880 | S.CER C1608 JB 1H 472K-T | B | 43.5/96.8 |
| C135 | 4030006880 | S.CER C1608 JB 1H 472K-T | T | 46/95.5 |
| C136 | 4030006880 | S.CER C1608 JB 1H 472K-T | T | 46/94.2 |
| C137 | 4030006880 | S.CER C1608 JB 1H 472K-T | T | 46/90.3 |
| C138 | 4030006880 | S.CER C1608 JB 1H 472K-T | T | 46.1/87.7 |
| C139 | 4030006880 | S.CER C1608 JB 1H 472K-T | B | 43.5/100.4 |
| C141 | 4030004740 | S.CER C2012 JB 1H 472K-T | B | 34.3/85.1 |
| C142 | 4550007470 | S.TAN F931A107MNMBMA | B | 19.4/87.4 |
| C150 | 4340000050 | S.MLR ECH-U 1C472JB5 | T | 16.3/64.6 |
| C151 | 4550007520 | S.TAN F931A106MAABMA | B | 38.6/92.1 |
| C152 | 4030007070 | S.CER C1608 CH 1H 330J-T | T | 19.2/59.9 |
| C153 | 4030009910 | S.CER C1608 CH 1H 040B-T | T | 21.3/55.4 |
| C154 | 4610001850 | S.TRI TZB4R200AB10R00 | T | 17.6/55.1 |
| C155 | 4030016550 | S.CER CM105 CH 151G 50AT | T | 24.1/55.4 |
| C156 | 4030016550 | S.CER CM105 CH 151G 50AT | T | 26.9/55.4 |
| C157 | 4030016550 | S.CER CM105 CH 151G 50AT | T | 26.9/56.7 |
| C158 | 4030006880 | S.CER C1608 JB 1H 472K-T | T | 23.3/53.1 |
| C159 | 4030006880 | S.CER C1608 JB 1H 472K-T | B | 23/51.9 |
| C161 | 4510008540 | S.ELE EEE1CA100SR | T | 31.3/61 |
| C162 | 4030009920 | S.CER C1608 CH 1H 050B-T | B | 33.6/53 |
| C163 | 4030011600 | S.CER C1608 JB 1E 104K-T | B | 36.9/59.6 |
| C164 | 4030006880 | S.CER C1608 JB 1H 472K-T | B | 30.3/54.8 |

M.=Mounted side (T: Mounted on the Top side, B: Mounted on the Bottom side)
S.=Surface mount

## [RXPLL-A UNIT]

| REF NO. | ORDER NO. | DESCRIPTION | M. | H/V LOCATION |
|---|---|---|---|---|
| C165 | 4030006880 | S.CER C1608 JB 1H 472K-T | B | 30.8/74 |
| C166 | 4030011600 | S.CER C1608 JB 1E 104K-T | B | 34.9/78.2 |
| C167 | 4030006880 | S.CER C1608 JB 1H 472K-T | B | 37.4/74 |
| C201 | 4030011340 | S.CER C1608 CH 1H 471J-T | T | 33.8/40.4 |
| C202 | 4510009280 | S.ELE EEE1EA4R7SR | T | 26.5/44 |
| C203 | 4030006900 | S.CER C1608 JB 1H 103K-T | T | 32.5/38.3 |
| C204 | 4030006880 | S.CER C1608 JB 1H 472K-T | T | 25.4/35.3 |
| C205 | 4030006880 | S.CER C1608 JB 1H 472K-T | T | 25.4/34 |
| C206 | 4030006880 | S.CER C1608 JB 1H 472K-T | T | 31.1/43 |
| C207 | 4030007030 | S.CER C1608 CH 1H 150J-T | B | 46.8/32.4 |
| C208 | 4030007030 | S.CER C1608 CH 1H 150J-T | T | 32.5/41 |
| C209 | 4030011340 | S.CER C1608 CH 1H 471J-T | T | 44.1/26.1 |
| C210 | 4550007620 | S.TAN F931V224MAABMA | T | 46.2/26.7 |
| C211 | 4550007300 | S.TAN F931A335MAABMA | B | 46.1/41.6 |
| C219 | 4030006880 | S.CER C1608 JB 1H 472K-T | T | 33.8/37.8 |
| C220 | 4030007130 | S.CER C1608 CH 1H 101J-T | T | 54.7/37.6 |
| C221 | 4030009520 | S.CER C1608 CH 1H 020B-T | T | 54.7/32 |
| C222 | 4610001860 | S.TRI TZB4Z060AB10R00 | T | 68.1/32.6 |
| C223 | 4030007080 | S.CER C1608 CH 1H 390J-T | T | 73.2/36.3 |
| C224 | 4030007010 | S.CER C1608 CH 1H 100D-T | T | 73.2/38.9 |
| C225 | 4030007050 | S.CER C1608 CH 1H 220J-T | T | 73.6/30.9 |
| C226 | 4030006880 | S.CER C1608 JB 1H 472K-T | T | 71/30.9 |
| C227 | 4030009920 | S.CER C1608 CH 1H 050B-T | T | 75.1/32.6 |
| C228 | 4510008540 | S.ELE EEE1CA100SR | T | 68.8/37.8 |
| C229 | 4030009530 | S.CER C1608 CH 1H 030B-T | T | 77.8/32.6 |
| C230 | 4030007100 | S.CER C1608 CH 1H 560J-T | T | 54.7/50 |
| C231 | 4030009510 | S.CER C1608 CH 1H 010B-T | T | 54.7/44.6 |
| C232 | 4610001860 | S.TRI TZB4Z060AB10R00 | T | 68.1/45.1 |
| C233 | 4030007070 | S.CER C1608 CH 1H 330J-T | T | 73.2/48.8 |
| C234 | 4030009920 | S.CER C1608 CH 1H 050B-T | T | 73.2/51.4 |
| C235 | 4030007020 | S.CER C1608 CH 1H 120J-T | T | 73.6/43.3 |
| C236 | 4030006880 | S.CER C1608 JB 1H 472K-T | T | 71/43.3 |
| C237 | 4030009910 | S.CER C1608 CH 1H 040B-T | T | 75.1/45 |
| C238 | 4510008540 | S.ELE EEE1CA100SR | T | 68.8/50.3 |
| C239 | 4030009910 | S.CER C1608 CH 1H 040B-T | T | 77.8/45 |
| C240 | 4030007080 | S.CER C1608 CH 1H 390J-T | T | 54.7/62.5 |
| C241 | 4030009510 | S.CER C1608 CH 1H 010B-T | T | 54.7/57.1 |
| C242 | 4610001860 | S.TRI TZB4Z060AB10R00 | T | 68.1/57.6 |
| C243 | 4030007060 | S.CER C1608 CH 1H 270J-T | T | 73.2/61.3 |
| C244 | 4030009910 | S.CER C1608 CH 1H 040B-T | T | 73.2/63.9 |
| C245 | 4030009920 | S.CER C1608 CH 1H 050B-T | T | 73.6/55.8 |
| C246 | 4030006880 | S.CER C1608 JB 1H 472K-T | T | 71/55.9 |
| C247 | 4030009530 | S.CER C1608 CH 1H 030B-T | T | 75.1/57.5 |
| C248 | 4510008540 | S.ELE EEE1CA100SR | T | 68.8/62.9 |
| C250 | 4030007100 | S.CER C1608 CH 1H 560J-T | T | 54.7/75 |
| C251 | 4030009540 | S.CER C1608 CH 1H 1R5B-T | T | 54.7/69.6 |
| C252 | 4610001810 | S.TRI TZB4Z030AB10R00 | T | 68.1/70.1 |
| C253 | 4030007080 | S.CER C1608 CH 1H 390J-T | T | 73.2/73.8 |
| C254 | 4030009530 | S.CER C1608 CH 1H 030B-T | T | 73.2/76.4 |
| C255 | 4030006990 | S.CER C1608 CH 1H 080D-T | T | 73.6/68.4 |
| C256 | 4030006880 | S.CER C1608 JB 1H 472K-T | T | 71/68.4 |
| C257 | 4030007010 | S.CER C1608 CH 1H 100D-T | T | 75.1/70 |
| C258 | 4510008540 | S.ELE EEE1CA100SR | T | 68.8/75.4 |
| C260 | 4030007110 | S.CER C1608 CH 1H 680J-T | T | 54.7/87.5 |
| C262 | 4610001810 | S.TRI TZB4Z030AB10R00 | T | 68.1/82.6 |
| C263 | 4030007080 | S.CER C1608 CH 1H 390J-T | T | 73.2/86.3 |
| C264 | 4030009530 | S.CER C1608 CH 1H 030B-T | T | 73.2/88.9 |
| C265 | 4030011770 | S.CER C1608 CH 1H 060B-T | T | 73.6/80.9 |
| C266 | 4030006880 | S.CER C1608 JB 1H 472K-T | T | 71/80.9 |
| C267 | 4030007010 | S.CER C1608 CH 1H 100D-T | T | 75.1/82.5 |
| C268 | 4510008540 | S.ELE EEE1CA100SR | T | 68.8/87.9 |
| C272 | 4610001860 | S.TRI TZB4Z060AB10R00 | T | 68.1/95.1 |
| C273 | 4030007050 | S.CER C1608 CH 1H 220J-T | T | 73.2/98.2 |
| C274 | 4030009530 | S.CER C1608 CH 1H 030B-T | T | 73.2/100.8 |
| C275 | 4030009920 | S.CER C1608 CH 1H 050B-T | T | 73.6/92.8 |
| C276 | 4030006880 | S.CER C1608 JB 1H 472K-T | T | 71/92.8 |
| C277 | 4030007010 | S.CER C1608 CH 1H 100D-T | T | 75.1/95 |
| C278 | 4510008540 | S.ELE EEE1CA100SR | T | 68.8/100.4 |
| C283 | 4030017810 | S.CER C1608 CH 1H 102J-T | T | 82.1/36.3 |
| C284 | 4030006880 | S.CER C1608 JB 1H 472K-T | T | 84.5/34.3 |
| C285 | 4030017810 | S.CER C1608 CH 1H 102J-T | T | 82.1/48.8 |
| C286 | 4030006880 | S.CER C1608 JB 1H 472K-T | T | 84.5/46.9 |
| C287 | 4030017810 | S.CER C1608 CH 1H 102J-T | T | 82.1/61.3 |
| C288 | 4030006880 | S.CER C1608 JB 1H 472K-T | T | 83.9/57.5 |
| C289 | 4030017810 | S.CER C1608 CH 1H 102J-T | T | 82.1/73.8 |
| C290 | 4030006880 | S.CER C1608 JB 1H 472K-T | T | 84.3/70.4 |
| C291 | 4030017810 | S.CER C1608 CH 1H 102J-T | T | 82.1/86.3 |
| C292 | 4030006880 | S.CER C1608 JB 1H 472K-T | T | 84.4/84.4 |
| C293 | 4030017810 | S.CER C1608 CH 1H 102J-T | T | 82.1/98.7 |
| C294 | 4030006880 | S.CER C1608 JB 1H 472K-T | T | 83.2/93.9 |
| C297 | 4030009920 | S.CER C1608 CH 1H 050B-T | T | 52.6/59.4 |
| C299 | 4030007050 | S.CER C1608 CH 1H 220J-T | T | 52.6/84.4 |
| C301 | 4030006880 | S.CER C1608 JB 1H 472K-T | T | 89.3/30.6 |
| C302 | 4030006880 | S.CER C1608 JB 1H 472K-T | T | 94.9/28 |
| C303 | 4030006880 | S.CER C1608 JB 1H 472K-T | B | 92.6/39.8 |
| C304 | 4030006880 | S.CER C1608 JB 1H 472K-T | B | 92.6/45.2 |
| C305 | 4030006880 | S.CER C1608 JB 1H 472K-T | B | 89.1/48.8 |
| C306 | 4030006880 | S.CER C1608 JB 1H 472K-T | B | 89.1/50.6 |
| C309 | 4030017810 | S.CER C1608 CH 1H 102J-T | T | 94.9/42.7 |
| C310 | 4030011600 | S.CER C1608 JB 1E 104K-T | T | 92.8/42.1 |
| C311 | 4510008520 | S.ELE EEE1CA470SP | T | 93.4/47.4 |
| C312 | 4030006880 | S.CER C1608 JB 1H 472K-T | B | 89/27.4 |
| C313 | 4030006880 | S.CER C1608 JB 1H 472K-T | B | 93.7/23.1 |
| C331 | 4030007110 | S.CER C1608 CH 1H 680J-T | T | 89.3/32.2 |
| C332 | 4030007160 | S.CER C1608 CH 1H 181J-T | T | 92.1/33.5 |
| C333 | 4030007110 | S.CER C1608 CH 1H 680J-T | T | 89.3/33.5 |
| C334 | 4030007050 | S.CER C1608 CH 1H 220J-T | T | 94.9/36 |
| C335 | 4030006980 | S.CER C1608 CH 1H 070D-T | T | 94.9/37.4 |
| C336 | 4030007030 | S.CER C1608 CH 1H 150J-T | T | 92.1/38.8 |
| C337 | 4030007050 | S.CER C1608 CH 1H 220J-T | T | 94.9/38.8 |
| C341 | 4030006880 | S.CER C1608 JB 1H 472K-T | T | 94.9/40.1 |
| C342 | 4030006880 | S.CER C1608 JB 1H 472K-T | T | 86.5/33.5 |
| C344 | 4030011600 | S.CER C1608 JB 1E 104K-T | T | 94.9/41.4 |
| C351 | 4030017810 | S.CER C1608 CH 1H 102J-T | T | 94.9/61.6 |

## [RXPLL-A UNIT]

| REF NO. | ORDER NO. | DESCRIPTION | M. | H/V LOCATION |
|---|---|---|---|---|
| C352 | 4030011600 | S.CER C1608 JB 1E 104K-T | T | 94.9/62.9 |
| C353 | 4510008520 | S.ELE EEE1CA470SP | T | 93.4/67.1 |
| C354 | 4030006880 | S.CER C1608 JB 1H 472K-T | T | 89.3/51.7 |
| C355 | 4030006880 | S.CER C1608 JB 1H 472K-T | T | 94.9/55.1 |
| C356 | 4030006880 | S.CER C1608 JB 1H 472K-T | T | 89.2/58.4 |
| C357 | 4030006880 | S.CER C1608 JB 1H 472K-T | T | 94.9/57.7 |
| C358 | 4030006880 | S.CER C1608 JB 1H 472K-T | B | 89.2/60.3 |
| C359 | 4030006880 | S.CER C1608 JB 1H 472K-T | B | 92.6/62.1 |
| C360 | 4030006880 | S.CER C1608 JB 1H 472K-T | B | 89.9/66.9 |
| C361 | 4030006880 | S.CER C1608 JB 1H 472K-T | T | 89.3/83.4 |
| C363 | 4030006880 | S.CER C1608 JB 1H 472K-T | T | 86.1/60.9 |
| C364 | 4030017810 | S.CER C1608 CH 1H 102J-T | T | 86.7/52.3 |
| C365 | 4030006880 | S.CER C1608 JB 1H 472K-T | T | 90.3/59.9 |
| C421 | 4030006880 | S.CER C1608 JB 1H 472K-T | T | 94.1/88.5 |
| C423 | 4030006880 | S.CER C1608 JB 1H 472K-T | T | 94.1/93.3 |
| C426 | 4030006880 | S.CER C1608 JB 1H 472K-T | B | 94.6/87.3 |
| C427 | 4030006880 | S.CER C1608 JB 1H 472K-T | T | 92.1/86.5 |
| C441 | 4030007040 | S.CER C1608 CH 1H 180J-T | T | 94.9/71.3 |
| C442 | 4030007040 | S.CER C1608 CH 1H 180J-T | T | 94.9/72.6 |
| C443 | 4030007020 | S.CER C1608 CH 1H 120J-T | T | 92.1/74.2 |
| C444 | 4030007080 | S.CER C1608 CH 1H 390J-T | T | 94.9/73.9 |
| C445 | 4030011770 | S.CER C1608 CH 1H 060B-T | T | 94.9/75.2 |
| C446 | 4030007060 | S.CER C1608 CH 1H 270J-T | T | 94.9/79.1 |
| C447 | 4030007110 | S.CER C1608 CH 1H 680J-T | T | 92.8/78.9 |
| C448 | 4030006880 | S.CER C1608 JB 1H 472K-T | T | 94.9/76.5 |
| C449 | 4030006880 | S.CER C1608 JB 1H 472K-T | T | 88.1/69.1 |
| C451 | 4030007110 | S.CER C1608 CH 1H 680J-T | T | 92/82.1 |
| C452 | 4030007160 | S.CER C1608 CH 1H 181J-T | T | 92/80.8 |
| C453 | 4030011600 | S.CER C1608 JB 1E 104K-T | T | 94.9/77.8 |
| C501 | 4030006880 | S.CER C1608 JB 1H 472K-T | T | 38.9/131.2 |
| C502 | 4030011600 | S.CER C1608 JB 1E 104K-T | T | 38.9/129.9 |
| C503 | 4510008540 | S.ELE EEE1CA100SR | T | 36.6/126.7 |
| C504 | 4030011600 | S.CER C1608 JB 1E 104K-T | T | 21.4/153.1 |
| C505 | 4550007470 | S.TAN F931A107MNMBMA | B | 19.2/140.3 |
| C506 | 4030011600 | S.CER C1608 JB 1E 104K-T | T | 21.4/141 |
| C507 | 4030011600 | S.CER C1608 JB 1E 104K-T | T | 21.4/137.1 |
| C509 | 4030011600 | S.CER C1608 JB 1E 104K-T | T | 25.8/132.6 |
| C510 | 4030011600 | S.CER C1608 JB 1E 104K-T | T | 28.4/132.6 |
| C511 | 4030011600 | S.CER C1608 JB 1E 104K-T | T | 32.2/132.6 |
| C512 | 4030011600 | S.CER C1608 JB 1E 104K-T | T | 34.8/132.6 |
| C513 | 4030011600 | S.CER C1608 JB 1E 104K-T | T | 37.4/132.6 |
| C514 | 4030011600 | S.CER C1608 JB 1E 104K-T | T | 41.2/136 |
| C515 | 4030011600 | S.CER C1608 JB 1E 104K-T | T | 41.3/139.7 |
| C516 | 4030011600 | S.CER C1608 JB 1E 104K-T | T | 41.3/142.3 |
| C517 | 4030011600 | S.CER C1608 JB 1E 104K-T | T | 37.6/151.8 |
| C518 | 4030011600 | S.CER C1608 JB 1E 104K-T | T | 34.8/151.8 |
| C519 | 4030011600 | S.CER C1608 JB 1E 104K-T | T | 31.2/151.8 |
| C520 | 4030011600 | S.CER C1608 JB 1E 104K-T | T | 23.3/151.9 |
| C521 | 4030011600 | S.CER C1608 JB 1E 104K-T | T | 41.6/134 |
| C522 | 4550007220 | S.TAN F931A476MCMBMA | B | 40.7/145 |
| C525 | 4030006880 | S.CER C1608 JB 1H 472K-T | T | 35.3/154.5 |
| C526 | 4030011600 | S.CER C1608 JB 1E 104K-T | T | 36.6/154.5 |
| C531 | 4030006880 | S.CER C1608 JB 1H 472K-T | T | 14.6/137.5 |
| C532 | 4030007070 | S.CER C1608 CH 1H 330J-T | T | 17.2/137.5 |
| C533 | 4030007110 | S.CER C1608 CH 1H 680J-T | T | 17.3/133.4 |
| C534 | 4030007110 | S.CER C1608 CH 1H 680J-T | T | 16.8/130.1 |
| C535 | 4030007070 | S.CER C1608 CH 1H 330J-T | T | 18.1/127 |
| C536 | 4030006880 | S.CER C1608 JB 1H 472K-T | T | 20.9/127.6 |
| C537 | 4030006880 | S.CER C1608 JB 1H 472K-T | T | 27.2/126.4 |
| C540 | 4030006880 | S.CER C1608 JB 1H 472K-T | B | 56.3/142.8 |
| C541 | 4510008540 | S.ELE EEE1CA100SR | T | 51/139.3 |
| C542 | 4340000260 | S.MLR ECPU1C104MA5 | B | 47.8/128.7 |
| C543 | 4030007060 | S.CER C1608 CH 1H 270J-T | T | 62.2/136.4 |
| C545 | 4030007060 | S.CER 27P C1608 CH | T | 70/137.1 |
| C546 | 4610001830 | S.TRI TZB4S100AB10R00 | T | 65.8/138.7 |
| C547 | 4030007130 | S.CER C1608 CH 1H 101J-T | T | 71.3/137.1 |
| C548 | 4030007010 | S.CER C1608 CH 1H 100D-T | T | 71.3/139.9 |
| C549 | 4030007050 | S.CER C1608 CH 1H 220J-T | T | 68.9/145.1 |
| C550 | 4030006880 | S.CER C1608 JB 1H 472K-T | T | 66.3/143 |
| C551 | 4030009520 | S.CER C1608 CH 1H 020B-T | T | 71.3/142.8 |
| C552 | 4030017810 | S.CER C1608 CH 1H 102J-T | B | 54.6/139.5 |
| C553 | 4030006880 | S.CER C1608 JB 1H 472K-T | B | 56.3/139.5 |
| C554 | 4510008500 | S.ELE EEE1CA101WP | T | 50.9/146.6 |
| C555 | 4030006880 | S.CER C1608 JB 1H 472K-T | B | 47.7/149.5 |
| C556 | 4550007220 | S.TAN F931A476MCMBMA | B | 76.4/136.1 |
| C558 | 4550007520 | S.TAN F931A106MAABMA | B | 43.4/132.5 |
| C559 | 4550007400 | S.TAN F931A225MAABMA | B | 43.4/129.9 |
| C561 | 4550007520 | S.TAN F931A106MAABMA | T | 70/157.5 |
| C562 | 4030006880 | S.CER C1608 JB 1H 472K-T | T | 68.3/155.5 |
| C563 | 4030017810 | S.CER C1608 CH 1H 102J-T | B | 60.1/158 |
| C564 | 4030006880 | S.CER C1608 JB 1H 472K-T | B | 58.8/158 |
| C565 | 4510008520 | S.ELE EEE1CA470SP | T | 50.9/155.6 |
| C566 | 4030006880 | S.CER C1608 JB 1H 472K-T | T | 64.4/155.5 |
| C571 | 4030006880 | S.CER C1608 JB 1H 472K-T | B | 58.5/161.3 |
| C573 | 4030007040 | S.CER C1608 CH 1H 180J-T | B | 72.5/166.8 |
| C574 | 4030009510 | S.CER C1608 CH 1H 010B-T | T | 72.6/169.1 |
| C575 | 4030007040 | S.CER C1608 CH 1H 180J-T | T | 72.6/171.9 |
| C580 | 4030006880 | S.CER C1608 JB 1H 472K-T | T | 41.9/152.4 |
| C581 | 4030006880 | S.CER C1608 JB 1H 472K-T | T | 41.9/144.2 |
| C591 | 4030006880 | S.CER C1608 JB 1H 472K-T | T | 63.5/171.2 |
| C592 | 4030007060 | S.CER C1608 CH 1H 270J-T | T | 62.8/163.1 |
| C593 | 4510008540 | S.ELE EEE1CA100SR | T | 54.4/170.7 |
| C594 | 4030006880 | S.CER C1608 JB 1H 472K-T | T | 57.4/171.9 |
| C596 | 4030006880 | S.CER C1608 JB 1H 472K-T | B | 63.7/168.1 |
| C597 | 4030007050 | S.CER C1608 CH 1H 220J-T | T | 62.2/171.2 |
| C651 | 4030006880 | S.CER C1608 JB 1H 472K-T | T | 13.5/174 |
| C652 | 4030011600 | S.CER C1608 JB 1E 104K-T | T | 12.9/176.3 |
| C653 | 4510008540 | S.ELE EEE1CA100SR | T | 6.8/172.6 |
| C654 | 4030011600 | S.CER C1608 JB 1E 104K-T | T | 22.8/161.4 |
| C655 | 4030011600 | S.CER C1608 JB 1E 104K-T | T | 25.9/161.4 |
| C656 | 4030011600 | S.CER C1608 JB 1E 104K-T | T | 25.8/177.1 |
| C657 | 4030011600 | S.CER C1608 JB 1E 104K-T | T | 22.7/177.1 |
| C658 | 4030011600 | S.CER C1608 JB 1E 104K-T | T | 13.5/172.7 |
| C659 | 4030011600 | S.CER C1608 JB 1E 104K-T | T | 16.5/163.4 |

M.=Mounted side (T: Mounted on the Top side, B: Mounted on the Bottom side)
S.=Surface mount

## [RXPLL-A UNIT]

| REF NO. | ORDER NO. | DESCRIPTION | M. | H/V LOCATION |
|---|---|---|---|---|
| C660 | 4030006880 | S.CER C1608 JB 1H 472K-T | T | 17.6/161.4 |
| C661 | 4030011600 | S.CER C1608 JB 1E 104K-T | T | 13.5/166.9 |
| C662 | 4550007220 | S.TAN F931A476MCMBMA | B | 30.5/169.4 |
| C680 | 4030006880 | S.CER C1608 JB 1H 472K-T | T | 34.3/177.1 |
| C689 | 4030011600 | S.CER C1608 JB 1E 104K-T | T | 37.4/166.4 |
| C690 | 4030011600 | S.CER C1608 JB 1E 104K-T | T | 37.4/161.3 |
| C691 | 4030011600 | S.CER C1608 JB 1E 104K-T | T | 46.4/164 |
| C692 | 4030006880 | S.CER C1608 JB 1H 472K-T | T | 40.3/162.1 |
| C693 | 4030006880 | S.CER C1608 JB 1H 472K-T | B | 58.4/169.6 |
| C694 | 4030006880 | S.CER C1608 JB 1H 472K-T | B | 58.4/164.2 |
| C703 | 4030017810 | S.CER C1608 CH 1H 102J-T | T | 24.3/116.6 |
| C704 | 4030006880 | S.CER C1608 JB 1H 472K-T | T | 23/116.6 |
| C705 | 4510008500 | S.ELE EEE1CA101WP | T | 29.4/118.7 |
| C707 | 4030011600 | S.CER C1608 JB 1E 104K-T | T | 32.1/113.7 |
| C708 | 4030011600 | S.CER C1608 JB 1E 104K-T | T | 32.1/108.1 |
| C709 | 4030007070 | S.CER C1608 CH 1H 330J-T | T | 38.8/112.9 |
| C710 | 4030006880 | S.CER C1608 JB 1H 472K-T | T | 36.2/112.9 |
| C711 | 4030009540 | S.CER C1608 CH 1H 1R5B-T | B | 39.3/113.6 |
| C712 | 4030007070 | S.CER C1608 CH 1H 330J-T | T | 36.2/114.2 |
| C713 | 4030006880 | S.CER C1608 JB 1H 472K-T | T | 42/118.8 |
| C1000 | 4030007050 | S.CER C1608 CH 1H 220J-T | B | 177.1/13.8 |
| C1002 | 4030006880 | S.CER C1608 JB 1H 472K-T | B | 153.1/16.2 |
| C1003 | 4030012600 | S.CER C2012 JB 1A 105M-T | T | 157.4/8.2 |
| C1004 | 4030011600 | S.CER C1608 JB 1E 104K-T | B | 169.6/8.7 |
| C1005 | 4030011600 | S.CER C1608 JB 1E 104K-T | T | 162.8/17.2 |
| C1006 | 4030010210 | S.CER C3216 JB 1C 105M-T | T | 173.8/18.6 |
| C1007 | 4030006880 | S.CER C1608 JB 1H 472K-T | T | 172.4/23.9 |
| C1008 | 4030006880 | S.CER C1608 JB 1H 472K-T | T | 160/24 |
| C1009 | 4030006880 | S.CER C1608 JB 1H 472K-T | T | 147.6/23.8 |
| C1010 | 4030012600 | S.CER C2012 JB 1A 105M-T | T | 154.5/28.9 |
| C1011 | 4030012600 | S.CER C2012 JB 1A 105M-T | T | 144.2/29.3 |
| C1012 | 4030010210 | S.CER C3216 JB 1C 105M-T | T | 144.8/40.2 |
| C1013 | 4030012600 | S.CER C2012 JB 1A 105M-T | T | 144.2/33.2 |
| C1014 | 4030018810 | S.CER C3216 CH 1H 333J-T | B | 151.6/48.3 |
| C1015 | 4030012600 | S.CER C2012 JB 1A 105M-T | T | 163.6/13.8 |
| C1016 | 4030012600 | S.CER C2012 JB 1A 105M-T | T | 173.6/33.2 |
| C1017 | 4030012600 | S.CER C2012 JB 1A 105M-T | T | 163.3/33.2 |
| C1020 | 4030012600 | S.CER C2012 JB 1A 105M-T | B | 170/38.6 |
| C1021 | 4030012600 | S.CER C2012 JB 1A 105M-T | B | 154/38.6 |
| C1024 | 4030010210 | S.CER C3216 JB 1C 105M-T | B | 170.5/45.5 |
| C1025 | 4030010210 | S.CER C3216 JB 1C 105M-T | B | 154.7/45.5 |
| C1026 | 4030010210 | S.CER C3216 JB 1C 105M-T | T | 171.4/52.7 |
| C1027 | 4030010210 | S.CER C3216 JB 1C 105M-T | T | 165.6/52.7 |
| C1028 | 4030006880 | S.CER C1608 JB 1H 472K-T | B | 156.4/65.4 |
| C1029 | 4030006880 | S.CER C1608 JB 1H 472K-T | T | 168.5/65.4 |
| C1030 | 4030010210 | S.CER C3216 JB 1C 105M-T | T | 164.5/18 |
| C1031 | 4030012600 | S.CER C2012 JB 1A 105M-T | B | 169.2/10.8 |
| C1033 | 4550006470 | S.TAN TEESVB2 1D 106M8R | B | 146.5/47.7 |
| C1034 | 4550006470 | S.TAN TEESVB2 1D 106M8R | B | 174/52.1 |
| C1035 | 4550006470 | S.TAN TEESVB2 1D 106M8R | B | 164.6/15.8 |
| C1036 | 4030007120 | S.CER C1608 CH 1H 820J-T | T | 160.2/12.7 |
| C1037 | 4030007090 | S.CER C1608 CH 1H 470J-T | B | 149.3/49.3 |
| C1038 | 4030017810 | S.CER C1608 CH 1H 102J-T | T | 146.6/26.2 |
| C1039 | 4030017810 | S.CER C1608 CH 1H 102J-T | T | 146.5/41 |
| C1040 | 4030017810 | S.CER C1608 CH 1H 102J-T | T | 145.3/36.4 |
| C1041 | 4030006990 | S.CER C1608 CH 1H 080D-T | B | 153.4/31 |
| C1046 | 4030007010 | S.CER C1608 CH 1H 100D-T | B | 168.4/53.7 |
| C1048 | 4030006880 | S.CER C1608 JB 1H 472K-T | B | 170.6/41.6 |
| C1049 | 4030006880 | S.CER C1608 JB 1H 472K-T | B | 154.6/41.6 |
| C1050 | 4030017810 | S.CER C1608 CH 1H 102J-T | B | 170.5/49.5 |
| C1051 | 4030017810 | S.CER C1608 CH 1H 102J-T | B | 154.7/49.4 |
| C1052 | 4030007060 | S.CER C1608 CH 1H 270J-T | B | 164.1/29.6 |
| C1053 | 4030007110 | S.CER C1608 CH 1H 680J-T | T | 175.2/77.3 |
| C1054 | 4030007010 | S.CER C1608 CH 1H 100D-T | B | 175.7/72.4 |
| C1055 | 4030007140 | S.CER C1608 CH 1H 121J-T | B | 175.7/74.2 |
| C1056 | 4030007050 | S.CER C1608 CH 1H 220J-T | T | 175.2/76 |
| C1057 | 4030007130 | S.CER C1608 CH 1H 101J-T | T | 172.1/77.1 |
| C1058 | 4030009920 | S.CER C1608 CH 1H 050B-T | B | 173.2/12.7 |
| C1060 | 4030017810 | S.CER C1608 CH 1H 102J-T | T | 178.6/94.4 |
| C1061 | 4030007090 | S.CER C1608 CH 1H 470J-T | B | 147.7/91.8 |
| C1062 | 4030007170 | S.CER C1608 CH 1H 221J-T | B | 149.5/91.8 |
| C1064 | 4030007090 | S.CER C1608 CH 1H 470J-T | T | 148.7/80.1 |
| C1066 | 4030007010 | S.CER C1608 CH 1H 100D-T | T | 138.6/81.9 |
| C1067 | 4030007010 | S.CER C1608 CH 1H 100D-T | T | 173.4/77.1 |
| C1070 | 4030006980 | S.CER C1608 CH 1H 070D-T | T | 137.2/81.9 |
| C1071 | 4030007100 | S.CER C1608 CH 1H 560J-T | B | 162.2/75.3 |
| C1072 | 4030007170 | S.CER C1608 CH 1H 221J-T | B | 162/78.7 |
| C1073 | 4030007080 | S.CER C1608 CH 1H 390J-T | B | 164.1/76.4 |
| C1074 | 4030007060 | S.CER C1608 CH 1H 270J-T | T | 148.7/78.6 |
| C1081 | 4030006900 | S.CER C1608 JB 1H 103K-T | B | 156.1/86 |
| C1082 | 4030006900 | S.CER C1608 JB 1H 103K-T | B | 151.3/91.8 |
| C1083 | 4030006900 | S.CER C1608 JB 1H 103K-T | B | 151.2/81.6 |
| C1084 | 4030006880 | S.CER C1608 JB 1H 472K-T | B | 149.4/81.6 |
| C1085 | 4030006880 | S.CER C1608 JB 1H 472K-T | B | 153/81.6 |
| C1091 | 4030006880 | S.CER C1608 JB 1H 472K-T | T | 149.3/149.4 |
| C1092 | 4030006880 | S.CER C1608 JB 1H 472K-T | T | 147/138.5 |
| C1093 | 4030006880 | S.CER C1608 JB 1H 472K-T | T | 161.3/135.8 |
| C1101 | 4030006900 | S.CER C1608 JB 1H 103K-T | T | 177/90.9 |
| C1102 | 4030006900 | S.CER C1608 JB 1H 103K-T | T | 175.4/115.5 |
| C1103 | 4030011600 | S.CER C1608 JB 1E 104K-T | T | 179.6/116.4 |
| C1104 | 4030011600 | S.CER C1608 JB 1E 104K-T | T | 175.4/87.7 |
| C1106 | 4030011600 | S.CER C1608 JB 1E 104K-T | T | 179.3/128.8 |
| C1107 | 4030011600 | S.CER C1608 JB 1E 104K-T | B | 172.3/124.2 |
| C1109 | 4030007090 | S.CER C1608 CH 1H 470J-T | T | 175.7/137.9 |
| C1110 | 4030006900 | S.CER C1608 JB 1H 103K-T | T | 175.7/136.6 |
| C1111 | 4030011600 | S.CER C1608 JB 1E 104K-T | T | 176.7/132 |
| C1112 | 4030006900 | S.CER C1608 JB 1H 103K-T | T | 179.3/132 |
| C1113 | 4030007090 | S.CER C1608 CH 1H 470J-T | T | 178.6/140.9 |
| C1114 | 4030006900 | S.CER C1608 JB 1H 103K-T | B | 178.4/138 |
| C1115 | 4030011600 | S.CER C1608 JB 1E 104K-T | T | 175.7/140 |
| C1116 | 4030006900 | S.CER C1608 JB 1H 103K-T | T | 165.7/138.7 |
| C1117 | 4030007010 | S.CER C1608 CH 1H 100D-T | T | 169.7/142.2 |
| C1118 | 4030011600 | S.CER C1608 JB 1E 104K-T | T | 171/142.2 |
| C1119 | 4030006880 | S.CER C1608 JB 1H 472K-T | T | 171.9/146.6 |

## [RXPLL-A UNIT]

| REF NO. | ORDER NO. | DESCRIPTION | M. | H/V LOCATION |
|---|---|---|---|---|
| C1120 | 4030006880 | S.CER C1608 JB 1H 472K-T | T | 171.9/148.4 |
| C1121 | 4030011600 | S.CER C1608 JB 1E 104K-T | T | 180.6/147.7 |
| C1122 | 4030009530 | S.CER C1608 CH 1H 030B-T | T | 178.2/120.3 |
| C1123 | 4030006900 | S.CER C1608 JB 1H 103K-T | T | 182.1/100.9 |
| C1124 | 4030006900 | S.CER C1608 JB 1H 103K-T | T | 175.3/105.9 |
| C1125 | 4030006900 | S.CER C1608 JB 1H 103K-T | T | 175.5/85.1 |
| C1126 | 4030011600 | S.CER C1608 JB 1E 104K-T | T | 173.4/131.1 |
| C1151 | 4030007110 | S.CER C1608 CH 1H 680J-T | B | 123.1/64 |
| C1152 | 4030007110 | S.CER C1608 CH 1H 680J-T | B | 123.1/57 |
| C1153 | 4030017810 | S.CER C1608 CH 1H 102J-T | T | 131.5/63.9 |
| C1201 | 4030007110 | S.CER C1608 CH 1H 680J-T | B | 120.2/21.8 |
| C1202 | 4030007110 | S.CER C1608 CH 1H 680J-T | B | 118.4/21.8 |
| C1207 | 4030006880 | S.CER C1608 JB 1H 472K-T | B | 123/11.8 |
| C1226 | 4030009500 | S.CER C1608 CH 1H 0R5B-T | B | 124.9/35.6 |
| C1227 | 4030009500 | S.CER C1608 CH 1H 0R5B-T | B | 115.4/35.6 |
| C1228 | 4030009920 | S.CER C1608 CH 1H 050B-T | B | 113.9/41.8 |
| C1231 | 4030006900 | S.CER C1608 JB 1H 103K-T | T | 118.9/21.5 |
| C1232 | 4030006900 | S.CER C1608 JB 1H 103K-T | T | 109/21.5 |
| C1234 | 4030006900 | S.CER C1608 JB 1H 103K-T | B | 123.5/38.3 |
| C1235 | 4030006880 | S.CER C1608 JB 1H 472K-T | B | 116.6/32.1 |
| C1236 | 4030006900 | S.CER C1608 JB 1H 103K-T | T | 119.8/40 |
| C1238 | 4030006900 | S.CER C1608 JB 1H 103K-T | B | 114/38.3 |
| C1239 | 4030006880 | S.CER C1608 JB 1H 472K-T | B | 106.8/32.3 |
| C1240 | 4030006900 | S.CER C1608 JB 1H 103K-T | T | 111.7/40.5 |
| C1241 | 4030006900 | S.CER C1608 JB 1H 103K-T | T | 113.6/38.6 |
| C1243 | 4030006880 | S.CER C1608 JB 1H 472K-T | B | 129.6/46.7 |
| C1244 | 4030007080 | S.CER C1608 CH 1H 390J-T | T | 149.6/67 |
| C1245 | 4030007130 | S.CER C1608 CH 1H 101J-T | T | 151/64.4 |
| C1246 | 4030007120 | S.CER C1608 CH 1H 820J-T | T | 150.9/67 |
| C1247 | 4030007090 | S.CER C1608 CH 1H 470J-T | T | 153.4/63.5 |
| C1248 | 4030007130 | S.CER C1608 CH 1H 101J-T | T | 153.4/66.8 |
| C1249 | 4030007020 | S.CER C1608 CH 1H 120J-T | T | 153.1/70.3 |
| C1250 | 4030007100 | S.CER C1608 CH 1H 560J-T | B | 152.4/74.3 |
| C1251 | 4030006900 | S.CER C1608 JB 1H 103K-T | T | 160.2/92.9 |
| C1252 | 4030006900 | S.CER C1608 JB 1H 103K-T | T | 152.7/92.9 |
| C1253 | 4030006900 | S.CER C1608 JB 1H 103K-T | B | 152.5/111.2 |
| C1255 | 4030017810 | S.CER C1608 CH 1H 102J-T | B | 155.7/99.3 |
| C1256 | 4030007010 | S.CER C1608 CH 1H 100D-T | T | 156.3/98.8 |
| C1257 | 4030011600 | S.CER C1608 JB 1E 104K-T | B | 155.7/103 |
| C1258 | 4030007080 | S.CER C1608 CH 1H 390J-T | B | 152/97.5 |
| C1264 | 4030007110 | S.CER C1608 CH 1H 680J-T | T | 122/51.1 |
| C1265 | 4610001830 | S.TRI TZB4S100AB10R00 | T | 163.8/70.8 |
| C1266 | 4030007020 | S.CER C1608 CH 1H 120J-T | T | 160.1/74.5 |
| C1267 | 4030006880 | S.CER C1608 JB 1H 472K-T | B | 157/126.4 |
| C1268 | 4030006980 | S.CER C1608 CH 1H 070D-T | T | 149.6/64.4 |
| C1302 | 4030007060 | S.CER C1608 CH 1H 270J-T | T | 159.3/111 |
| C1303 | 4030006980 | S.CER C1608 CH 1H 070D-T | T | 159.3/112.9 |
| C1304 | 4030007070 | S.CER C1608 CH 1H 330J-T | T | 159.3/114.2 |
| C1305 | 4030007010 | S.CER C1608 CH 1H 100D-T | T | 153.5/114.6 |
| C1306 | 4030009650 | S.CER C1608 CH 1H 240J-T | T | 159.3/115.5 |
| C1307 | 4030007030 | S.CER C1608 CH 1H 150J-T | T | 153.5/120.2 |
| C1308 | 4030006900 | S.CER C1608 JB 1H 103K-T | T | 155.1/127.1 |
| C1309 | 4030007080 | S.CER C1608 CH 1H 390J-T | T | 156.5/125.8 |
| C1310 | 4030007080 | S.CER C1608 CH 1H 390J-T | T | 159.1/128.4 |
| C1311 | 4030006900 | S.CER C1608 JB 1H 103K-T | B | 149/118.9 |
| C1312 | 4030007060 | S.CER C1608 CH 1H 270J-T | T | 155.5/111.7 |
| C1313 | 4030007060 | S.CER C1608 CH 1H 270J-T | T | 159.1/127.1 |
| C1355 | 4030006880 | S.CER C1608 JB 1H 472K-T | T | 144.7/70 |
| C1357 | 4030007000 | S.CER C1608 CH 1H 090D-T | B | 144.6/67.1 |
| C1358 | 4030011600 | S.CER C1608 JB 1E 104K-T | B | 139.1/70.4 |
| C1360 | 4030011600 | S.CER C1608 JB 1E 104K-T | B | 146.4/70.4 |
| C1361 | 4030007020 | S.CER C1608 CH 1H 120J-T | B | 137.7/69.5 |
| C1362 | 4030011600 | S.CER C1608 JB 1E 104K-T | T | 137.5/65.6 |
| C1403 | 4030017810 | S.CER C1608 CH 1H 102J-T | T | 114.7/70.3 |
| C1404 | 4030017810 | S.CER C1608 CH 1H 102J-T | T | 116.3/104.8 |
| C1405 | 4030006900 | S.CER C1608 JB 1H 103K-T | B | 115.9/63.9 |
| C1406 | 4030017810 | S.CER C1608 CH 1H 102J-T | T | 114.2/66.2 |
| C1407 | 4030017810 | S.CER C1608 CH 1H 102J-T | T | 119.9/70.3 |
| C1408 | 4030006900 | S.CER C1608 JB 1H 103K-T | T | 116.3/73 |
| C1409 | 4030006900 | S.CER C1608 JB 1H 103K-T | T | 114.4/68.1 |
| C1410 | 4030007030 | S.CER C1608 CH 1H 150J-T | T | 116.3/83.3 |
| C1411 | 4030006990 | S.CER C1608 CH 1H 080D-T | T | 112.2/87.8 |
| C1412 | 4030007030 | S.CER C1608 CH 1H 150J-T | T | 116.3/93.7 |
| C1413 | 4030007020 | S.CER C1608 CH 1H 120J-T | T | 107/83.3 |
| C1414 | 4030006990 | S.CER C1608 CH 1H 080D-T | T | 103.6/86.6 |
| C1415 | 4030007020 | S.CER C1608 CH 1H 120J-T | T | 107/93.7 |
| C1416 | 4030006900 | S.CER C1608 JB 1H 103K-T | T | 113.2/103.4 |
| C1417 | 4030006900 | S.CER C1608 JB 1H 103K-T | T | 110.5/107.6 |
| C1418 | 4030017810 | S.CER C1608 CH 1H 102J-T | T | 110.4/105.8 |
| C1419 | 4030017810 | S.CER C1608 CH 1H 102J-T | T | 111/108.9 |
| C1420 | 4030007120 | S.CER C1608 CH 1H 820J-T | B | 113.2/114.2 |
| C1421 | 4030007150 | S.CER C1608 CH 1H 151J-T | B | 115/114.2 |
| C1423 | 4030010750 | S.CER C1608 CH 1H 201J-T | B | 120.3/111.1 |
| C1424 | 4030007010 | S.CER C1608 CH 1H 100D-T | T | 132.8/103.3 |
| C1425 | 4030011600 | S.CER C1608 JB 1E 104K-T | T | 136.5/106.2 |
| C1426 | 4030011600 | S.CER C1608 JB 1E 104K-T | T | 137.8/106.2 |
| C1427 | 4030006900 | S.CER C1608 JB 1H 103K-T | T | 133.9/106.2 |
| C1428 | 4030006980 | S.CER C1608 CH 1H 070D-T | T | 119.5/109 |
| C1429 | 4030006900 | S.CER C1608 JB 1H 103K-T | T | 120.5/113.6 |
| C1430 | 4030007040 | S.CER C1608 CH 1H 180J-T | B | 131.9/115.3 |
| C1431 | 4030017810 | S.CER C1608 CH 1H 102J-T | T | 127/116.2 |
| C1432 | 4030009980 | S.CER C1608 JB 1H 152K-T | T | 129.1/114.1 |
| C1433 | 4030011600 | S.CER C1608 JB 1E 104K-T | T | 130.4/114.1 |
| C1434 | 4030009920 | S.CER C1608 CH 1H 050B-T | B | 124.7/134.4 |
| C1435 | 4030009920 | S.CER C1608 CH 1H 050B-T | B | 124.7/131.6 |
| C1436 | 4030011600 | S.CER C1608 JB 1E 104K-T | B | 137.2/122.2 |
| C1437 | 4030009920 | S.CER C1608 CH 1H 050B-T | T | 104/83.3 |
| C1438 | 4030009920 | S.CER C1608 CH 1H 050B-T | T | 102.3/86.6 |
| C1439 | 4030009920 | S.CER C1608 CH 1H 050B-T | T | 110/93.7 |
| C1441 | 4030006880 | S.CER C1608 JB 1H 472K-T | T | 120.5/116.2 |
| C1451 | 4030007020 | S.CER C1608 CH 1H 120J-T | T | 125.5/80.1 |
| C1453 | 4030007030 | S.CER C1608 CH 1H 150J-T | T | 122.1/85.1 |
| C1454 | 4030007030 | S.CER C1608 CH 1H 150J-T | T | 120.8/85.1 |
| C1456 | 4030007020 | S.CER C1608 CH 1H 120J-T | T | 125.5/90.9 |

M.=Mounted side (T: Mounted on the Top side, B: Mounted on the Bottom side)
S.=Surface mount

## [RXPLL-A UNIT]

| REF NO. | ORDER NO. | DESCRIPTION | | M. | H/V LOCATION |
|---|---|---|---|---|---|
| C1457 | 4030006900 | S.CER | C1608 JB 1H 103K-T | T | 118.3/72.9 |
| C1458 | 4030006900 | S.CER | C1608 JB 1H 103K-T | T | 116.6/103.5 |
| C1501 | 4030018530 | S.CER | C3216 CH 1H 103J-T | T | 131.2/124.5 |
| C1502 | 4550003220 | S.TAN | TEESVA 1E 105M8R | T | 132.1/139.2 |
| C1503 | 4030006900 | S.CER | C1608 JB 1H 103K-T | T | 137/142.1 |
| C1504 | 4030012610 | S.CER | C2012 JB 1C 474K-T | T | 136.7/140.5 |
| C1505 | 4030007010 | S.CER | C1608 CH 1H 100D-T | T | 130/143.5 |
| C1506 | 4030010760 | S.CER | C1608 CH 1H 331J-T | T | 131.3/146.3 |
| C1507 | 4510008540 | S.ELE | EEE1CA100SR | T | 142.6/140.8 |
| C1508 | 4030011600 | S.CER | C1608 JB 1E 104K-T | B | 128.8/148.8 |
| C1509 | 4030018800 | S.CER | C3216 CH 1H 223J-T | T | 135.8/145.1 |
| C1510 | 4030007110 | S.CER | C1608 CH 1H 680J-T | T | 136.5/158.9 |
| C1511 | 4510008540 | S.ELE | EEE1CA100SR | T | 132.7/150.6 |
| C1512 | 4030011600 | S.CER | C1608 JB 1E 104K-T | T | 129.6/149 |
| C1513 | 4030011600 | S.CER | C1608 JB 1E 104K-T | T | 129.6/158.1 |
| C1514 | 4510008540 | S.ELE | EEE1CA100SR | T | 132.7/156.5 |
| C1515 | 4030007160 | S.CER | C1608 CH 1H 181J-T | T | 132.2/160.8 |
| C1516 | 4030009350 | S.CER | C1608 CH 1H 3R5B-T | T | 130.9/160.8 |
| C1517 | 4030007110 | S.CER | C1608 CH 1H 680J-T | T | 115.3/155 |
| C1518 | 4030018530 | S.CER | C3216 CH 1H 103J-T | T | 131.2/132.8 |
| C1519 | 4550003220 | S.TAN | TEESVA 1E 105M8R | T | 122.9/140.9 |
| C1520 | 4030006900 | S.CER | C1608 JB 1H 103K-T | T | 119.8/140.7 |
| C1521 | 4030012610 | S.CER | C2012 JB 1C 474K-T | T | 116.2/142.1 |
| C1522 | 4030007010 | S.CER | C1608 CH 1H 100D-T | T | 123.7/143.5 |
| C1523 | 4030010760 | S.CER | C1608 CH 1H 331J-T | T | 122.4/146.3 |
| C1524 | 4030018800 | S.CER | C3216 CH 1H 223J-T | T | 117.9/145.2 |
| C1525 | 4510008540 | S.ELE | EEE1CA100SR | T | 124.9/150.6 |
| C1526 | 4030011600 | S.CER | C1608 JB 1E 104K-T | T | 128/149 |
| C1527 | 4030011600 | S.CER | C1608 JB 1E 104K-T | T | 128/158.1 |
| C1528 | 4510008540 | S.ELE | EEE1CA100SR | T | 124.9/156.5 |
| C1529 | 4030017870 | S.CER | C1608 CH 1H 681J-T | T | 125.4/160.8 |
| C1530 | 4030011330 | S.CER | C1608 CH 1H 391J-T | T | 126.7/160.8 |
| C1531 | 4510008500 | S.ELE | EEE1CA101WP | T | 111.3/167.3 |
| C1532 | 4030011600 | S.CER | C1608 JB 1E 104K-T | T | 107.1/167.3 |
| C1533 | 4030011600 | S.CER | C1608 JB 1E 104K-T | T | 115.5/167.3 |
| C1534 | 4510008500 | S.ELE | EEE1CA101WP | T | 119.7/167.3 |
| C1535 | 4030011600 | S.CER | C1608 JB 1E 104K-T | T | 133.7/172.6 |
| C1536 | 4030017870 | S.CER | C1608 CH 1H 681J-T | T | 126.2/179.5 |
| C1537 | 4510008500 | S.ELE | EEE1CA101WP | T | 111.3/176 |
| C1538 | 4030011600 | S.CER | C1608 JB 1E 104K-T | T | 107.1/176 |
| C1539 | 4030011600 | S.CER | C1608 JB 1E 104K-T | T | 115.5/176 |
| C1540 | 4510008500 | S.ELE | EEE1CA101WP | T | 119.7/176 |
| C1541 | 4030007050 | S.CER | C1608 CH 1H 220J-T | T | 124/175 |
| C1651 | 4030006880 | S.CER | C1608 JB 1H 472K-T | B | 105.5/144 |
| C1653 | 4030006880 | S.CER | C1608 JB 1H 472K-T | B | 109/137.2 |
| C1654 | 4030017810 | S.CER | C1608 CH 1H 102J-T | B | 106.9/137.2 |
| C1655 | 4030009530 | S.CER | C1608 CH 1H 030B-T | T | 107.6/136.8 |
| C1656 | 4610001970 | S.TRI | TZC3P200A110R00 | T | 110.9/136.2 |
| C1657 | 4030010220 | S.CER | C2012 CH 1H 102J-T | T | 116.4/122.7 |
| C1658 | 4030010220 | S.CER | C2012 CH 1H 102J-T | T | 116.4/130.9 |
| C1659 | 4030011600 | S.CER | C1608 JB 1E 104K-T | T | 107.8/120 |
| C1660 | 4030011600 | S.CER | C1608 JB 1E 104K-T | B | 134/174 |
| C1661 | 4030011600 | S.CER | C1608 JB 1E 104K-T | B | 145.2/171.3 |
| C1662 | 4030011600 | S.CER | C1608 JB 1E 104K-T | T | 144.3/178 |
| C1663 | 4030011600 | S.CER | C1608 JB 1E 104K-T | T | 135.1/170.2 |
| C1665 | 4030006900 | S.CER | C1608 JB 1H 103K-T | T | 138.9/164.1 |
| C1666 | 4030006880 | S.CER | C1608 JB 1H 472K-T | B | 113.3/144 |
| C1701 | 4030011600 | S.CER | C1608 JB 1E 104K-T | T | 153.4/163 |
| C1702 | 4030011600 | S.CER | C1608 JB 1E 104K-T | T | 144.4/163 |
| C1703 | 4510004601 | ELE | 16 ME 1000 HC | | |
| C1704 | 4030011600 | S.CER | C1608 JB 1E 104K-T | B | 180.1/160.2 |
| C1705 | 4030011600 | S.CER | C1608 JB 1E 104K-T | B | 186.4/160.2 |
| C1706 | 4510008520 | S.ELE | EEE1CA470SP | T | 172.7/154.8 |
| C1707 | 4030011600 | S.CER | C1608 JB 1E 104K-T | T | 149.7/154.8 |
| C1708 | 4030006880 | S.CER | C1608 JB 1H 472K-T | T | 175.7/166.8 |
| C1709 | 4030006880 | S.CER | C1608 JB 1H 472K-T | T | 172.6/166.8 |
| C1710 | 4030006880 | S.CER | C1608 JB 1H 472K-T | T | 169.6/166.8 |
| C1711 | 4030011340 | S.CER | C1608 CH 1H 471J-T | T | 171.4/163.5 |
| C1712 | 4030011340 | S.CER | C1608 CH 1H 471J-T | T | 167.5/163.5 |
| C1713 | 4030006880 | S.CER | C1608 JB 1H 472K-T | B | 165.5/168.8 |
| C1714 | 4030006880 | S.CER | C1608 JB 1H 472K-T | B | 153.8/141.8 |
| C1716 | 4030006880 | S.CER | C1608 JB 1H 472K-T | B | 154.7/145.1 |
| C1717 | 4030006880 | S.CER | C1608 JB 1H 472K-T | B | 152.9/145.1 |
| C1719 | 4030006880 | S.CER | C1608 JB 1H 472K-T | B | 151.1/145.1 |
| C1720 | 4030006880 | S.CER | C1608 JB 1H 472K-T | B | 155.6/141.8 |
| C1721 | 4030006880 | S.CER | C1608 JB 1H 472K-T | B | 157.4/141.8 |
| RL1001 | 6330001750 | RLY | FTR-B4CA012Z | | |
| RL1002 | 6330001750 | RLY | FTR-B4CA012Z | | |
| RL1003 | 6330001750 | RLY | FTR-B4CA012Z | | |
| RL1004 | 6330001750 | RLY | FTR-B4CA012Z | | |
| RL1005 | 6330001750 | RLY | FTR-B4CA012Z | | |
| RL1006 | 6330001750 | RLY | FTR-B4CA012Z | | |
| RL1203 | 6330001750 | RLY | FTR-B4CA012Z | | |
| RL1206 | 6330001750 | RLY | FTR-B4CA012Z | | |
| J2 | 6510019991 | S.CNR | 52808-2271 (2291) | T | 25/9 |
| J10 | 6510007020 | CNR | TMP-J01X-V6 | | |
| J351 | 6510007020 | CNR | TMP-J01X-V6 | | |
| J561 | 6510007020 | CNR | TMP-J01X-V6 | | |
| J601 | 6510007020 | CNR | TMP-J01X-V6 | | |
| J681 | 6510007020 | CNR | TMP-J01X-V6 | | |
| J831 | 6510007020 | CNR | TMP-J01X-V6 | | |
| J1002 | 6510007020 | CNR | TMP-J01X-V6 | | |
| J1101 | 6510007020 | CNR | TMP-J01X-V6 | | |
| J1201 | 6510007020 | CNR | TMP-J01X-V6 | | |
| J1301 | 6510007020 | CNR | TMP-J01X-V6 | | |
| J1501 | 6510018961 | S.CNR | B2B-PH-SM4-TB (LF) (SN) | T | 149.6/177.5 |
| J1701 | 6510019981 | S.CNR | 52808-1671 (1690) | T | 168/177.2 |
| W1052 | 9016201006 | WIR | 73/98/025/X98/X98 | | |
| W1401 | 9029495075 | JMP | 73/98/020/X98/X98 | | |
| W1411 | 7120000480 | S.JMP | MJP-0.4-T | T | 125.1/111.6 |

## [RXPLL-B UNIT]

| REF NO. | ORDER NO. | DESCRIPTION | | M. | H/V LOCATION |
|---|---|---|---|---|---|
| IC1 | 1130011530 | S.IC | CD74HC4094M96 | T | 11.9/24.1 |
| IC2 | 1130009691 | S.IC | TC74HCT7007AF (F) | T | 22.8/23.3 |
| IC51 | 1180001251 | S.IC | TA7808F (TE16L,Q) | T | 77/16.7 |
| IC61 | 1180000421 | S.IC | TA78L05F (TE12R,F) | B | 56.5/16 |
| IC101 | 1140007881 | S.IC | TC190G08EFG0046JDZ/SC1246A | T | 31.3/89.7 |
| IC102 | 1130003831 | S.IC | TC7S04F (TE85R,F) | T | 33.1/74.7 |
| IC104 | 1130003831 | S.IC | TC7S04F (TE85R,F) | T | 31.7/101.1 |
| IC201 | 1130009230 | S.IC | LMX2306TMX/NOPB | T | 27.9/38.8 |
| IC501 | 1140007881 | S.IC | TC190G08EFG0046JDZ/SC1246A | T | 31.3/142.5 |
| IC502 | 1130003831 | S.IC | TC7S04F (TE85R,F) | T | 24.8/127.4 |
| IC503 | 1130003831 | S.IC | TC7S04F (TE85R,F) | T | 31.7/154.1 |
| IC651 | 1140004550 | S.IC | M65343FP/SC1287 | T | 22.6/169.2 |
| IC652 | 1130003831 | S.IC | TC7S04F (TE85R,F) | T | 13.7/163.1 |
| IC1051 | 1190002010 | S.IC | SD5400CY <TOMO> | T | 176.9/99.9 |
| IC1081 | 1110006180 | S.IC | UPG2009TB-E3 | B | 151.6/85.1 |
| IC1402 | 1190002110 | S.IC | NJG1519KC1-TE3 | T | 117.3/69.5 |
| IC1403 | 1190002110 | S.IC | NJG1519KC1-TE3 | T | 113.4/106.3 |
| IC1501 | 1110006121 | S.IC | DBM9A41-G-TR | T | 121.2/124.5 |
| IC1502 | 1110006121 | S.IC | DBM9A41-G-TR | T | 121.2/133 |
| IC1503 | 1110006100 | S.IC | NJM5534MD-TE1 | T | 138.4/151.7 |
| IC1504 | 1110006100 | S.IC | NJM5534MD-TE1 | T | 119.2/151.7 |
| IC1505 | 1110006190 | S.IC | NJM074M-TE1 | T | 128.8/166.9 |
| IC1506 | 1110006100 | S.IC | NJM5534MD-TE1 | T | 128.8/175.6 |
| IC1651 | 1130011921 | S.IC | TC74LCX00F (EL,F) | T | 110/126.2 |
| IC1652 | 1110005420 | S.IC | BA15532F-E2 | T | 139.8/175.6 |
| IC1653 | 1110005100 | S.IC | NJM072BM-TE1 | B | 140/172 |
| IC1701 | 1130011530 | S.IC | CD74HC4094M96 | T | 158/166.7 |
| IC1702 | 1130011530 | S.IC | CD74HC4094M96 | T | 148.9/166.7 |
| IC1703 | 1160000131 | S.IC | TD62783AFG (S,EL) | T | 157.3/154.8 |
| IC1704 | 1180000790 | S.IC | AN78L10M (E1) | B | 183.2/159.8 |
| Q1 | 1590001050 | S.TR | DTC114TUA T106 | B | 30.3/22.6 |
| Q30 | 1530002060 | S.TR | 2SC4081 T106 R | T | 22.3/110.9 |
| Q41 | 1590000680 | S.TR | DTC114EUA T106 | T | 12.8/34.2 |
| Q150 | 1560000331 | S.FET | 2SK210-GR (TE85R,F) | T | 26.9/53 |
| Q151 | 1530002280 | S.TR | 2SC4081 T106 S | B | 33.6/57.2 |
| Q152 | 1530002280 | S.TR | 2SC4081 T106 S | B | 30.8/78.2 |
| Q201 | 1590001330 | S.TR | DTA114EUA T106 | T | 29.6/34.1 |
| Q220 | 1560000331 | S.FET | 2SK210-GR (TE85R,F) | T | 72.5/33.9 |
| Q230 | 1560000331 | S.FET | 2SK210-GR (TE85R,F) | T | 72.5/46.4 |
| Q240 | 1560000331 | S.FET | 2SK210-GR (TE85R,F) | T | 72.5/58.9 |
| Q250 | 1560000331 | S.FET | 2SK210-GR (TE85R,F) | T | 72.5/71.4 |
| Q260 | 1560000331 | S.FET | 2SK210-GR (TE85R,F) | T | 72.5/83.9 |
| Q270 | 1560000331 | S.FET | 2SK210-GR (TE85R,F) | T | 72.5/95.8 |
| Q280 | 1590000680 | S.TR | DTC114EUA T106 | T | 82.3/34.4 |
| Q281 | 1590000680 | S.TR | DTC114EUA T106 | T | 82.3/46.9 |
| Q282 | 1590000680 | S.TR | DTC114EUA T106 | T | 82.3/59.4 |
| Q283 | 1590000680 | S.TR | DTC114EUA T106 | T | 82.3/71.9 |
| Q284 | 1590000680 | S.TR | DTC114EUA T106 | T | 82.3/84.4 |
| Q285 | 1590000680 | S.TR | DTC114EUA T106 | T | 82.3/96.4 |
| Q301 | 1530003431 | S.TR | 2SC5226-4-TL-E | T | 92.1/30.1 |
| Q302 | 1530003431 | S.TR | 2SC5226-4-TL-E | B | 89.1/42.5 |
| Q303 | 1530003431 | S.TR | 2SC5226-4-TL-E | B | 91.3/25.1 |
| Q341 | 1590000680 | S.TR | DTC114EUA T106 | T | 86.3/36.7 |
| Q351 | 1580000751 | S.FET | 3SK294 (TE85L,F) | T | 92.1/56.9 |
| Q352 | 1530003431 | S.TR | 2SC5226-4-TL-E | B | 89.2/64.5 |
| Q363 | 1590000680 | S.TR | DTC114EUA T106 | T | 86.8/54.3 |
| Q364 | 1590001330 | S.TR | DTA114EUA T106 | T | 86.8/57.4 |
| Q441 | 1590000680 | S.TR | DTC114EUA T106 | T | 86.5/73.7 |
| Q502 | 1590000680 | S.TR | DTC114EUA T106 | T | 41.9/128.8 |
| Q540 | 1530002060 | S.TR | 2SC4081 T106 R | B | 58.7/141.2 |
| Q541 | 1560000331 | S.FET | 2SK210-GR (TE85R,F) | T | 68.9/142.8 |
| Q561 | 1530003431 | S.TR | 2SC5226-4-TL-E | T | 70.6/153.8 |
| Q580 | 1530003431 | S.TR | 2SC5226-4-TL-E | T | 41.7/147.4 |
| Q591 | 1530003151 | S.TR | 2SC4673D-TD-E | T | 61.7/166.5 |
| Q592 | 1520000561 | S.TR | 2SB1123 T-TD-E | B | 52/165.3 |
| Q593 | 1590000680 | S.TR | DTC114EUA T106 | B | 54.8/171.2 |
| Q601 | 1530002601 | S.TR | 2SC4215-O (TE85R,F) | T | 49.5/118.2 |
| Q680 | 1530002060 | S.TR | 2SC4081 T106 R | T | 37.5/163.2 |
| Q702 | 1530002601 | S.TR | 2SC4215-O (TE85R,F) | T | 31.4/110.9 |
| Q1001 | 1530003851 | S.TR | 2SC5551F-TD-E | B | 174/9 |
| Q1004 | 1590001960 | S.TR | XP4311 (TX) | T | 150/18.8 |
| Q1005 | 1590001960 | S.TR | XP4311 (TX) | T | 145.9/18.8 |
| Q1006 | 1530003851 | S.TR | 2SC5551F-TD-E | B | 150/37.6 |
| Q1007 | 1530003851 | S.TR | 2SC5551F-TD-E | B | 176.5/42.5 |
| Q1008 | 1530003851 | S.TR | 2SC5551F-TD-E | B | 160.5/42.5 |
| Q1101 | 1530003860 | TR | 2SC3950D | | |
| Q1102 | 1590000680 | S.TR | DTC114EUA T106 | T | 165.5/133.8 |
| Q1103 | 1520000561 | S.TR | 2SB1123 T-TD-E | B | 168.6/127.8 |
| Q1104 | 1530003860 | TR | 2SC3950D | | |
| Q1105 | 1530003841 | S.TR | 2SC5501-4-TR-E | T | 166.5/142.1 |
| Q1205 | 1590001960 | S.TR | XP4311 (TX) | T | 158.8/55.6 |
| Q1209 | 1530003851 | S.TR | 2SC5551F-TD-E | B | 121/34.9 |
| Q1210 | 1530003851 | S.TR | 2SC5551F-TD-E | B | 111.5/34.9 |
| Q1211 | 1560001311 | S.FET | MMBFU310LT1G | T | 159.5/96.4 |
| Q1212 | 1560001311 | S.FET | MMBFU310LT1G | T | 153.5/96.4 |
| Q1213 | 1590000680 | S.TR | DTC114EUA T106 | B | 156.9/123.7 |
| Q1214 | 1520000561 | S.TR | 2SB1123 T-TD-E | B | 155.4/113.5 |
| Q1301 | 1530003151 | S.TR | 2SC4673D-TD-E | T | 157.8/120 |
| Q1352 | 1530003851 | S.TR | 2SC5551F-TD-E | B | 140/66.7 |
| Q1401 | 1530003841 | S.TR | 2SC5501-4-TR-E | T | 131.9/105.8 |
| Q1402 | 1530003021 | S.TR | 2SC4402-3-TL-E | T | 123.4/111.8 |
| Q1403 | 1530003021 | S.TR | 2SC4402-3-TL-E | T | 123.4/114.3 |
| Q1501 | 1530003450 | S.TR | 2SC4835-R (TX) | T | 133.5/143.5 |
| Q1502 | 1530003450 | S.TR | 2SC4835-R (TX) | T | 120.4/143.5 |
| Q1651 | 1530002601 | S.TR | 2SC4215-O (TE85R,F) | B | 105.6/140.3 |
| Q1701 | 1590001960 | S.TR | XP4311 (TX) | T | 106.6/43.9 |
| Q1702 | 1590001960 | S.TR | XP4311 (TX) | T | 148.9/147.2 |
| Q1703 | 1590001960 | S.TR | XP4311 (TX) | T | 146.4/147.2 |
| D101 | 1750000520 | S.DIO | DAN222TL | T | 41.8/86.2 |
| D152 | 1720000590 | S.VCP | MA357 (TX) | T | 17.6/59.9 |

M.=Mounted side (T: Mounted on the Top side, B: Mounted on the Bottom side)
S.=Surface mount

## [RXPLL-B UNIT]

| REF NO. | ORDER NO. | DESCRIPTION | | M. | H/V LOCATION |
|---|---|---|---|---|---|
| D153 | 1790000491 | S.DIO | HSM88ASTR-E | T | 27.2/60.4 |
| D154 | 1790000491 | S.DIO | HSM88ASTR-E | T | 27.2/63.8 |
| D201 | 1750000520 | S.DIO | DAN222TL | T | 32.4/34.1 |
| D220 | 1720000590 | S.VCP | MA357 (TX) | T | 50.8/31.8 |
| D221 | 1720000590 | S.VCP | MA357 (TX) | T | 52.9/31.8 |
| D222 | 1790000620 | S.DIO | MA77 (TX) | T | 82.6/29.8 |
| D230 | 1720000590 | S.VCP | MA357 (TX) | T | 50.8/44.2 |
| D231 | 1720000590 | S.VCP | MA357 (TX) | T | 52.9/44.2 |
| D232 | 1790000620 | S.DIO | MA77 (TX) | T | 82.6/42.3 |
| D240 | 1720000590 | S.VCP | MA357 (TX) | T | 50.8/56.7 |
| D241 | 1720000590 | S.VCP | MA357 (TX) | T | 52.9/56.7 |
| D242 | 1790000620 | S.DIO | MA77 (TX) | T | 82.6/54.8 |
| D250 | 1720000590 | S.VCP | MA357 (TX) | T | 50.8/69.2 |
| D252 | 1790000620 | S.DIO | MA77 (TX) | T | 82.6/67.3 |
| D261 | 1720000590 | S.VCP | MA357 (TX) | T | 52.9/81.7 |
| D262 | 1790000620 | S.DIO | MA77 (TX) | T | 82.6/79.8 |
| D270 | 1720000590 | S.VCP | MA357 (TX) | T | 50.8/94.2 |
| D271 | 1720000590 | S.VCP | MA357 (TX) | T | 52.4/96.7 |
| D272 | 1790000620 | S.DIO | MA77 (TX) | T | 82.5/92 |
| D341 | 1790000620 | S.DIO | MA77 (TX) | T | 90/37.2 |
| D342 | 1160000070 | S.DIO | DAN202K T146 | B | 81.1/47.7 |
| D362 | 1790000620 | S.DIO | MA77 (TX) | T | 88.3/65.5 |
| D363 | 1790000620 | S.DIO | MA77 (TX) | T | 88.3/62 |
| D421 | 1790000620 | S.DIO | MA77 (TX) | T | 91.9/85 |
| D441 | 1790000620 | S.DIO | MA77 (TX) | T | 89.6/74.4 |
| D501 | 1750000520 | S.DIO | DAN222TL | T | 42/132 |
| D542 | 1720000590 | S.VCP | MA357 (TX) | T | 62.5/139.6 |
| D1101 | 1790000620 | S.DIO | MA77 (TX) | T | 177.6/146.6 |
| D1102 | 1790000620 | S.DIO | MA77 (TX) | T | 177.6/148.4 |
| D1351 | 1750000581 | S.DIO | 1SV307 (TPH3,F) | T | 140.8/71.1 |
| D1653 | 1750000550 | S.DIO | 1SS355 TE-17 | T | 138.9/167.2 |
| D1654 | 1750000550 | S.DIO | 1SS355 TE-17 | T | 142.5/167.2 |
| D1701 | 1790001670 | S.DIO | RB706F-40T106 | T | 170.5/160.8 |
| | | | | | |
| FI101 | 2020002090 | S.CER | SFECV10M7FD00-R0 | T | 26/73.9 |
| FI1401 | 2030000321 | S.MLH | FL-359A (64.555 MHz) | T | 116.3/88.5 |
| FI1402 | 2030000311 | S.MLH | FL-360A (64.555 MHz) | T | 107/88.5 |
| FI1403 | 2030000520 | S.MLH | DSF753SDF 64.555 (FL-397) | T | 126/85.5 |
| | | | | | |
| L1 | 6200003261 | S.COL | NLV32T-101J | T | 10.8/15.4 |
| L2 | 6200003261 | S.COL | NLV32T-101J | T | 29/19.9 |
| L10 | 6200003950 | S.COL | HF50ACC 322513-T | T | 38.6/14.7 |
| L11 | 6200003950 | S.COL | HF50ACC 322513-T | T | 13.8/15.4 |
| L12 | 6200003950 | S.COL | HF50ACC 322513-T | T | 16.8/15.4 |
| L13 | 6200003950 | S.COL | HF50ACC 322513-T | T | 29/15.4 |
| L20 | 6200003321 | S.COL | NLV32T-3R3J | T | 85.9/123.8 |
| L30 | 6200005491 | S.COL | NLV32T-331J | T | 20.6/120 |
| L101 | 6200001831 | S.COL | NLV32T-100J | T | 38.3/72.8 |
| L151 | 6130002970 | COL | LB-343 | | |
| L152 | 6200001831 | S.COL | NLV32T-100J | T | 30/54.5 |
| L201 | 6200005011 | S.COL | NLV25T-100J | T | 22.2/45 |
| L211 | 6200003661 | S.COL | NLV25T-R68J | B | 45.4/35.3 |
| L220 | 6200010790 | S.COL | C2520C-3R9G-A | T | 51.9/37.5 |
| L221 | 6190001421 | COL | #E526GN-110502 | | |
| L222 | 6200010790 | S.COL | C2520C-3R9G-A | T | 76.2/37.7 |
| L230 | 6200010830 | S.COL | C2520C-3R3G-A | T | 51.9/50 |
| L231 | 6190001421 | COL | #E526GN-110502 | | |
| L232 | 6200010830 | S.COL | C2520C-3R3G-A | T | 76.2/50.2 |
| L240 | 6200010830 | S.COL | C2520C-3R3G-A | T | 51.9/62.4 |
| L241 | 6190001421 | COL | #E526GN-110502 | | |
| L242 | 6200010830 | S.COL | C2520C-3R3G-A | T | 76.2/62.7 |
| L250 | 6200010820 | S.COL | C2520C-2R7G-A | T | 51.9/74.9 |
| L251 | 6190001421 | COL | #E526GN-110502 | | |
| L252 | 6200010820 | S.COL | C2520C-2R7G-A | T | 76.2/75.2 |
| L260 | 6200010820 | S.COL | C2520C-2R7G-A | T | 51.9/87.4 |
| L261 | 6190001411 | COL | #E526GN-110501 | | |
| L262 | 6200010820 | S.COL | C2520C-2R7G-A | T | 76.2/87.7 |
| L270 | 6200010810 | S.COL | C2520C-2R2G-A | T | 51.9/99.8 |
| L271 | 6190001411 | COL | #E526GN-110501 | | |
| L272 | 6200010810 | S.COL | C2520C-2R2G-A | T | 76/100.2 |
| L280 | 6200005011 | S.COL | NLV25T-100J | T | 67.4/25.5 |
| L302 | 6200001831 | S.COL | NLV32T-100J | T | 89.3/42.6 |
| L331 | 6200002641 | S.COL | NLV25T-R15J | T | 95.1/34.1 |
| L332 | 6200002411 | S.COL | NLV25T-056J | B | 93.2/36 |
| L341 | 6200003261 | S.COL | NLV32T-101J | T | 87/39.6 |
| L351 | 6200001831 | S.COL | NLV32T-100J | T | 91.3/62 |
| L421 | 6200008641 | S.COL | NLV32T-391J | T | 87/81 |
| L441 | 6200002601 | S.COL | NLV25T-047J | T | 91.9/72.3 |
| L442 | 6200010730 | S.COL | C2520C-68NG-A | T | 90.5/78.2 |
| L451 | 6200002641 | S.COL | NLV25T-R15J | T | 95/81 |
| L452 | 6200003261 | S.COL | NLV32T-101J | T | 87/78 |
| L501 | 6200001831 | S.COL | NLV32T-100J | T | 31/125.8 |
| L530 | 6200003171 | S.COL | NLV32T-330J | T | 14.6/134.9 |
| L531 | 6200003171 | S.COL | NLV32T-330J | T | 14.6/130.8 |
| L532 | 6200003171 | S.COL | NLV32T-330J | T | 15.5/127.1 |
| L541 | 6200010790 | S.COL | C2520C-3R9G-A | T | 56.3/139.6 |
| L542 | 6190001421 | COL | #E526GN-110502 | | |
| L543 | 6200010790 | S.COL | C2520C-3R9G-A | T | 68.4/147.9 |
| L544 | 6200003261 | S.COL | NLV32T-101J | B | 65.9/142.1 |
| L545 | 6200003261 | S.COL | NLV32T-101J | B | 51.3/139.6 |
| L561 | 6200003261 | S.COL | NLV32T-101J | B | 64/156 |
| L562 | 6200001831 | S.COL | NLV32T-100J | B | 74.6/151.8 |
| L565 | 6150004250 | COL | LS-471A (C-14922) | | |
| L566 | 6150004250 | COL | LS-471A (C-14922) | | |
| L591 | 6200007790 | S.COL | LQW2BHNR15J03L | T | 60.5/171.5 |
| L601 | 6200001831 | S.COL | NLV32T-100J | T | 49.5/123.6 |
| L602 | 6200002641 | S.COL | NLV25T-R15J | T | 54.1/118 |
| L603 | 6200002841 | S.COL | NLV25T-R22J | T | 57.1/117.2 |
| L651 | 6200001831 | S.COL | NLV32T-100J | T | 15.5/176.2 |
| L681 | 6200002981 | S.COL | NLV32T-R56J | T | 37.4/176.2 |
| L682 | 6200003041 | S.COL | NLV32T-R68J | T | 37.8/172.6 |
| L683 | 6200003051 | S.COL | NLV32T-R82J | T | 40.2/166.2 |

## [RXPLL-B UNIT]

| REF NO. | ORDER NO. | DESCRIPTION | | M. | H/V LOCATION |
|---|---|---|---|---|---|
| L701 | 6200003261 | S.COL | NLV32T-101J | T | 23.6/120 |
| L702 | 6150004971 | S.COL | LS-522-LF | T | 37.6/108.6 |
| L703 | 6150004971 | S.COL | LS-522-LF | T | 37.5/118.5 |
| L1001 | 6190001650 | COL | ELC06D102E | | |
| L1002 | 6140004400 | COL | LR-499 | | |
| L1004 | 6140003890 | COL | LR-488 | | |
| L1005 | 6180001000 | COL | LAL 04NA 102K | | |
| L1006 | 6140003900 | COL | LR-489 | | |
| L1007 | 6140003800 | COL | LR-439 | | |
| L1008 | 6190001650 | COL | ELC06D102E | | |
| L1009 | 6190001650 | COL | ELC06D102E | | |
| L1010 | 6140003880 | COL | LR-486 | | |
| L1011 | 6140003880 | COL | LR-486 | | |
| L1012 | 6140003800 | COL | LR-439 | | |
| L1013 | 6200010680 | S.COL | C2520C-R22G-A (0.22U) | T | 155/55.2 |
| L1014 | 6200010680 | S.COL | C2520C-R22G-A (0.22U) | T | 157.9/12.4 |
| L1015 | 6200007790 | S.COL | LQW2BHNR15J03L | B | 163.5/27.5 |
| L1052 | 6200010740 | S.COL | C2520C-R27G-A | T | 177.8/74.6 |
| L1053 | 6200010740 | S.COL | C2520C-R27G-A | T | 173.8/73.5 |
| L1054 | 6200010740 | S.COL | C2520C-R27G-A | T | 169.4/72.6 |
| L1055 | 6140003960 | COL | LR-495 | | |
| L1056 | 6200010730 | S.COL | C2520C-68NG-A | T | 171/83.8 |
| L1058 | 6190001631 | COL | #E544EN-100021 | | |
| L1060 | 6200010730 | S.COL | C2520C-68NG-A | T | 149.1/76.4 |
| L1062 | 6200011450 | S.COL | C2520C-R39G-A | T | 145.1/81.4 |
| L1063 | 6200010650 | S.COL | C2520C-R12G-A (0.12U) | T | 140.9/82.5 |
| L1071 | 6200007780 | S.COL | LQW2BHNR12J03L | B | 164.9/79.2 |
| L1072 | 6200007780 | S.COL | LQW2BHNR12J03L | B | 168/76.1 |
| L1091 | 6200003950 | S.COL | HF50ACC 322513-T | B | 171/149 |
| L1092 | 6200003950 | S.COL | HF50ACC 322513-T | T | 149.7/136.5 |
| L1093 | 6200003950 | S.COL | HF50ACC 322513-T | T | 157/135.2 |
| L1101 | 6140003920 | COL | LR-491 | | |
| L1102 | 6200010650 | S.COL | C2520C-R12G-A (0.12U) | T | 176.9/117.9 |
| L1103 | 6180001250 | COL | LAL 04NA 3R3K | | |
| L1104 | 6200010870 | S.COL | C2520C-R33G-A (0.33U) | T | 178.3/135.9 |
| L1105 | 6140003910 | COL | LR-490 | | |
| L1151 | 6140004640 | COL | LR-519 | | |
| L1201 | 6200007780 | S.COL | LQW2BHNR12J03L | B | 119.3/17.4 |
| L1208 | 6140003800 | COL | LR-439 | | |
| L1209 | 6200001831 | S.COL | NLV32T-100J | T | 121.1/20.8 |
| L1210 | 6140004440 | COL | LR-503 | | |
| L1211 | 6200009690 | S.COL | LQH43CN101K03L | T | 115.7/34.6 |
| L1212 | 6200001831 | S.COL | NLV32T-100J | T | 106.8/20.8 |
| L1213 | 6140004440 | COL | LR-503 | | |
| L1214 | 6200009690 | S.COL | LQH43CN101K03L | T | 105.9/34.8 |
| L1216 | 6140003800 | COL | LR-439 | | |
| L1217 | 6200007750 | S.COL | LQW2BHN56NJ03L | T | 147.9/63.7 |
| L1218 | 6200007770 | S.COL | LQW2BHNR10J03L | T | 153.3/65.1 |
| L1219 | 6200007790 | S.COL | LQW2BHNR15J03L | T | 153.2/68.4 |
| L1220 | 6140000930 | COL | LR-116 | | |
| L1221 | 6200003261 | S.COL | NLV32T-101J | B | 149.5/110.9 |
| L1222 | 6150001770 | COL | LS-198 | | |
| L1223 | 6200007750 | S.COL | LQW2BHN56NJ03L | B | 151.3/100.7 |
| L1228 | 6200010870 | S.COL | C2520C-R33G-A (0.33U) | T | 158.7/71.3 |
| L1229 | 6200003950 | S.COL | HF50ACC 322513-T | B | 164.7/115 |
| L1301 | 6200008090 | S.COL | LQW2BHN68NJ03L | T | 157.1/111.9 |
| L1302 | 6200008090 | S.COL | LQW2BHN68NJ03L | T | 156.4/115.5 |
| L1303 | 6200008090 | S.COL | LQW2BHN68NJ03L | T | 153.4/117.5 |
| L1304 | 6200010870 | S.COL | C2520C-R33G-A (0.33U) | T | 153.8/123 |
| L1305 | 6200003001 | S.COL | NLV32T-R22J | T | 159.2/124.5 |
| L1306 | 6200001831 | S.COL | NLV32T-100J | B | 152.7/118.6 |
| L1307 | 6200003001 | S.COL | NLV32T-R22J | T | 153.3/112 |
| L1351 | 6200001831 | S.COL | NLV32T-100J | T | 143/76.4 |
| L1353 | 6200010740 | S.COL | C2520C-R27G-A | T | 141.6/67.5 |
| L1354 | 6200001831 | S.COL | NLV32T-100J | T | 136.4/68 |
| L1401 | 6150004280 | COL | LS-484B (C-14927) | | |
| L1402 | 6150004280 | COL | LS-484B (C-14927) | | |
| L1403 | 6150004280 | COL | LS-484B (C-14927) | | |
| L1404 | 6150004280 | COL | LS-484B (C-14927) | | |
| L1405 | 6200007770 | S.COL | LQW2BHNR10J03L | B | 112.5/111.4 |
| L1406 | 6200007750 | S.COL | LQW2BHN56NJ03L | B | 116.6/111.4 |
| L1407 | 6140003930 | COL | LR-492 | | |
| L1408 | 6190001621 | COL | #E544EN-100028 | | |
| L1409 | 6200003191 | S.COL | NLV32T-470J | B | 135.8/125.4 |
| L1410 | 6150004280 | COL | LS-484B (C-14927) | | |
| L1411 | 6150004280 | COL | LS-484B (C-14927) | | |
| L1501 | 6200003520 | S.COL | ELJFB 102K-F | T | 142.1/145.1 |
| L1652 | 6200002520 | S.COL | ELJNC R18K-F | T | 112.9/133.1 |
| L1653 | 6200001831 | S.COL | NLV32T-100J | B | 105.4/124.6 |
| L1654 | 6200001831 | S.COL | NLV32T-100J | B | 112.4/141.9 |
| L1655 | 6200001831 | S.COL | NLV32T-100J | B | 124.7/139.8 |
| L1701 | 6200001831 | S.COL | NLV32T-100J | T | 167/160 |
| L1702 | 6200003950 | S.COL | HF50ACC 322513-T | T | 175.6/169.8 |
| L1703 | 6200003950 | S.COL | HF50ACC 322513-T | T | 172.6/169.8 |
| L1704 | 6200003950 | S.COL | HF50ACC 322513-T | T | 169.6/169.8 |
| L1705 | 6200003950 | S.COL | HF50ACC 322513-T | T | 165.5/169.8 |
| L1803 | 6200003950 | S.COL | HF50ACC 322513-T | B | 132/54.8 |
| L1804 | 6200003950 | S.COL | HF50ACC 322513-T | B | 118/154.8 |
| L1805 | 6200003950 | S.COL | HF50ACC 322513-T | B | 155.2/132 |
| L1807 | 6200003950 | S.COL | HF50ACC 322513-T | B | 118/151.3 |
| L1808 | 6200003950 | S.COL | HF50ACC 322513-T | B | 141.3/162 |
| L1809 | 6200003950 | S.COL | HF50ACC 322513-T | B | 149.5/115.6 |
| | | | | | |
| R1 | 7030005871 | S.RES | ERA3YKD 104V (100 k) | T | 32.5/19.2 |
| R2 | 7030005321 | S.RES | ERA3YED 103V (10 k) | T | 31.2/19.2 |
| R3 | 7030003550 | S.RES | ERJ3GEYJ 822 V (8.2 k) | T | 16.9/23.5 |
| R4 | 7030003550 | S.RES | ERJ3GEYJ 822 V (8.2 k) | T | 16.9/24.8 |
| R5 | 7030003550 | S.RES | ERJ3GEYJ 822 V (8.2 k) | T | 13.3/31.3 |
| R6 | 7030003550 | S.RES | ERJ3GEYJ 822 V (8.2 k) | T | 13.3/30 |
| R7 | 7030003500 | S.RES | ERJ3GEYJ 332 V (3.3 k) | B | 26.7/12.9 |
| R8 | 7030003470 | S.RES | ERJ3GEYJ 182 V (1.8 k) | B | 28.2/14.6 |
| R9 | 7030003680 | S.RES | ERJ3GEYJ 104 V (100 k) | B | 27.5/10.6 |
| R10 | 7030003360 | S.RES | ERJ3GEYJ 221 V (220) | T | 19/16 |

M.=Mounted side (T: Mounted on the Top side, B: Mounted on the Bottom side)
S.=Surface mount

## [RXPLL-B UNIT]

| REF NO. | ORDER NO. | DESCRIPTION | M. | H/V LOCATION |
|---|---|---|---|---|
| R11 | 7030003360 | S.RES ERJ3GEYJ 221 V (220) | T | 20.3/16 |
| R12 | 7030003360 | S.RES ERJ3GEYJ 221 V (220) | T | 22.4/16 |
| R13 | 7030003360 | S.RES ERJ3GEYJ 221 V (220) | T | 23.7/16 |
| R14 | 7030003360 | S.RES ERJ3GEYJ 221 V (220) | T | 25/16 |
| R15 | 7030003360 | S.RES ERJ3GEYJ 221 V (220) | T | 26.4/16.2 |
| R16 | 7030003360 | S.RES ERJ3GEYJ 221 V (220) | T | 32.5/15.4 |
| R17 | 7030003360 | S.RES ERJ3GEYJ 221 V (220) | T | 33.8/15.4 |
| R30 | 7030003240 | S.RES ERJ3GEYJ 220 V (22) | T | 21.7/113.7 |
| R31 | 7030003600 | S.RES ERJ3GEYJ 223 V (22 k) | T | 20.4/111.1 |
| R32 | 7030003320 | S.RES ERJ3GEYJ 101 V (100) | T | 23/113.7 |
| R33 | 7030003340 | S.RES ERJ3GEYJ 151 V (150) | T | 19.1/115 |
| R51 | 7030011030 | S.RES ERJ1TYJ 270U (27) | T | 66.3/13.9 |
| R61 | 7030011030 | S.RES ERJ1TYJ 270U (27) | T | 45.1/13.9 |
| R101 | 7030003800 | S.RES ERJ3GEYJ 105 V (1 M) | T | 34.1/101.5 |
| R102 | 7030003860 | S.RES ERJ3GE JPW V | B | 35.6/88.6 |
| R103 | 7030007230 | S.RES ERA3YED 102V (1 k) | T | 25.1/100.3 |
| R104 | 7030007230 | S.RES ERA3YED 102V (1 k) | T | 26.4/100.3 |
| R105 | 7030007230 | S.RES ERA3YED 102V (1 k) | T | 27.8/100.3 |
| R106 | 7030003360 | S.RES ERJ3GEYJ 221 V (220) | T | 29.1/100.3 |
| R107 | 7030003320 | S.RES ERJ3GEYJ 101 V (100) | T | 38/101.5 |
| R108 | 7030007230 | S.RES ERA3YED 102V (1 k) | T | 28.9/79 |
| R109 | 7030007230 | S.RES ERA3YED 102V (1 k) | T | 41.9/84.5 |
| R110 | 7030007220 | S.RES ERA3YED 202V (2 k) | T | 14.6/100.5 |
| R111 | 7030007220 | S.RES ERA3YED 202V (2 k) | T | 17.2/100.5 |
| R112 | 7030007220 | S.RES ERA3YED 202V (2 k) | T | 17.2/99.2 |
| R113 | 7030007220 | S.RES ERA3YED 202V (2 k) | T | 17.2/97.9 |
| R114 | 7030007220 | S.RES ERA3YED 202V (2 k) | T | 17.2/96.6 |
| R115 | 7030007220 | S.RES ERA3YED 202V (2 k) | T | 17.2/95.2 |
| R116 | 7030007220 | S.RES ERA3YED 202V (2 k) | T | 17.2/93.9 |
| R117 | 7030007220 | S.RES ERA3YED 202V (2 k) | T | 17.2/92.6 |
| R118 | 7030007200 | S.RES ERA3YEB 202V (2 k) | T | 17.2/91.3 |
| R119 | 7030007200 | S.RES ERA3YEB 202V (2 k) | T | 17.2/89.6 |
| R120 | 7030007200 | S.RES ERA3YEB 202V (2 k) | T | 17.2/87 |
| R121 | 7030007200 | S.RES ERA3YEB 202V (2 k) | T | 17.2/84.4 |
| R122 | 7030007200 | S.RES ERA3YEB 202V (2 k) | T | 17.2/81.8 |
| R123 | 7030007230 | S.RES ERA3YED 102V (1 k) | T | 14.6/99.2 |
| R124 | 7030007230 | S.RES ERA3YED 102V (1 k) | T | 14.6/97.9 |
| R125 | 7030007230 | S.RES ERA3YED 102V (1 k) | T | 14.6/96.6 |
| R126 | 7030007230 | S.RES ERA3YED 102V (1 k) | T | 14.6/95.2 |
| R127 | 7030007230 | S.RES ERA3YED 102V (1 k) | T | 14.6/93.9 |
| R128 | 7030007230 | S.RES ERA3YED 102V (1 k) | T | 14.6/92.6 |
| R129 | 7030007210 | S.RES ERA3YEB 102V (1 k) | T | 14.6/91.3 |
| R130 | 7030007210 | S.RES ERA3YEB 102V (1 k) | T | 14.6/89.6 |
| R131 | 7030007210 | S.RES ERA3YEB 102V (1 k) | T | 14.6/88.3 |
| R132 | 7030007210 | S.RES ERA3YEB 102V (1 k) | T | 14.6/87 |
| R133 | 7030007210 | S.RES ERA3YEB 102V (1 k) | T | 14.6/85.7 |
| R134 | 7030009861 | S.RES ERA3YED 471V (470) | T | 14.6/84.4 |
| R135 | 7030003860 | S.RES ERJ3GE JPW V | T | 30.4/75.8 |
| R136 | 7030003800 | S.RES ERJ3GEYJ 105 V (1 M) | T | 33/77.1 |
| R137 | 7030003200 | S.RES ERJ3GEYJ 100 V (10) | T | 35.5/75.8 |
| R138 | 7030003860 | S.RES ERJ3GE JPW V | T | 16.8/78.6 |
| R139 | 7030003860 | S.RES ERJ3GE JPW V | T | 17.6/75.8 |
| R150 | 7030003330 | S.RES ERJ3GEYJ 121 V (120) | B | 37.8/86.2 |
| R151 | 7030003220 | S.RES ERJ3GEYJ 150 V (15) | B | 38.6/88.1 |
| R152 | 7030005871 | S.RES ERA3YKD 104V (100 k) | B | 36.2/82.5 |
| R153 | 7030005321 | S.RES ERA3YED 103V (10 k) | T | 19.2/62.7 |
| R154 | 7030003320 | S.RES ERJ3GEYJ 101 V (100) | B | 26.3/54.1 |
| R155 | 7030003350 | S.RES ERJ3GEYJ 181 V (180) | B | 23/54.1 |
| R156 | 7030005871 | S.RES ERA3YKD 104V (100 k) | T | 24.6/53.1 |
| R157 | 7030005871 | S.RES ERA3YKD 104V (100 k) | T | 26.9/58 |
| R158 | 7030003340 | S.RES ERJ3GEYJ 151 V (150) | T | 30/57.3 |
| R159 | 7030003320 | S.RES ERJ3GEYJ 101 V (100) | B | 33.6/61.4 |
| R160 | 7030003360 | S.RES ERJ3GEYJ 221 V (220) | B | 33.6/59.6 |
| R161 | 7030003640 | S.RES ERJ3GEYJ 473 V (47 k) | B | 33.6/54.8 |
| R163 | 7030003220 | S.RES ERJ3GEYJ 150 V (15) | B | 30.2/56.6 |
| R164 | 7030003310 | S.RES ERJ3GEYJ 820 V (82) | B | 34.1/70.4 |
| R165 | 7030003320 | S.RES ERJ3GEYJ 101 V (100) | B | 30.8/70.4 |
| R166 | 7030003320 | S.RES ERJ3GEYJ 101 V (100) | B | 30.8/72.2 |
| R167 | 7030003240 | S.RES ERJ3GEYJ 220 V (22) | B | 37.4/75.8 |
| R168 | 7030003360 | S.RES ERJ3GEYJ 221 V (220) | B | 34.1/75.8 |
| R169 | 7030003640 | S.RES ERJ3GEYJ 473 V (47 k) | B | 30.8/75.8 |
| R202 | 7030007230 | S.RES ERA3YED 102V (1 k) | T | 22.2/39.7 |
| R203 | 7030007230 | S.RES ERA3YED 102V (1 k) | T | 22.2/38.4 |
| R204 | 7030003360 | S.RES ERJ3GEYJ 221 V (220) | T | 22.2/37.1 |
| R205 | 7030005321 | S.RES ERA3YED 103V (10 k) | T | 27.4/34 |
| R206 | 7030003220 | S.RES ERJ3GEYJ 150 V (15) | T | 31.1/45.7 |
| R210 | 7030005351 | S.RES ERA3YED 182V (1.8 k) | T | 35.6/37.5 |
| R217 | 7030009651 | S.RES ERA3YHD 820V (82) | B | 40.4/42.8 |
| R219 | 7030009691 | S.RES ERA3YED 101V (100) | B | 40/35.7 |
| R220 | 7030005871 | S.RES ERA3YKD 104V (100 k) | T | 73.2/37.6 |
| R221 | 7030005871 | S.RES ERA3YKD 104V (100 k) | T | 72.3/30.9 |
| R222 | 7030003400 | S.RES ERJ3GEYJ 471 V (470) | T | 81.4/38.3 |
| R223 | 7030007230 | S.RES ERA3YED 102V (1 k) | T | 81.9/31.9 |
| R224 | 7030003320 | S.RES ERJ3GEYJ 101 V (100) | T | 73.2/40.2 |
| R230 | 7030005871 | S.RES ERA3YKD 104V (100 k) | T | 73.2/50.1 |
| R231 | 7030005871 | S.RES ERA3YKD 104V (100 k) | T | 72.3/43.3 |
| R232 | 7030003360 | S.RES ERJ3GEYJ 221 V (220) | T | 81.4/50.8 |
| R233 | 7030007230 | S.RES ERA3YED 102V (1 k) | T | 81.9/44.4 |
| R234 | 7030003320 | S.RES ERJ3GEYJ 101 V (100) | T | 73.2/52.7 |
| R240 | 7030005871 | S.RES ERA3YKD 104V (100 k) | T | 73.2/62.6 |
| R241 | 7030005871 | S.RES ERA3YKD 104V (100 k) | T | 72.3/55.8 |
| R242 | 7030003360 | S.RES ERJ3GEYJ 221 V (220) | T | 81.4/63.3 |
| R243 | 7030007230 | S.RES ERA3YED 102V (1 k) | T | 81.9/56.9 |
| R244 | 7030003320 | S.RES ERJ3GEYJ 101 V (100) | T | 73.2/65.2 |
| R250 | 7030005871 | S.RES ERA3YKD 104V (100 k) | T | 73.2/75.1 |
| R251 | 7030005871 | S.RES ERA3YKD 104V (100 k) | T | 72.3/68.4 |
| R252 | 7030003360 | S.RES ERJ3GEYJ 221 V (220) | T | 81.4/75.8 |
| R253 | 7030007230 | S.RES ERA3YED 102V (1 k) | T | 81.9/69.4 |
| R254 | 7030003320 | S.RES ERJ3GEYJ 101 V (100) | T | 73.2/77.7 |
| R260 | 7030005871 | S.RES ERA3YKD 104V (100 k) | T | 73.2/87.6 |
| R261 | 7030005871 | S.RES ERA3YKD 104V (100 k) | T | 72.3/80.9 |
| R262 | 7030003400 | S.RES ERJ3GEYJ 471 V (470) | T | 81.4/88.3 |
| R263 | 7030007230 | S.RES ERA3YED 102V (1 k) | T | 81.9/81.9 |
| R264 | 7030003320 | S.RES ERJ3GEYJ 101 V (100) | T | 73.2/90.2 |

## [RXPLL-B UNIT]

| REF NO. | ORDER NO. | DESCRIPTION | M. | H/V LOCATION |
|---|---|---|---|---|
| R270 | 7030005871 | S.RES ERA3YKD 104V (100 k) | T | 73.2/99.5 |
| R271 | 7030005871 | S.RES ERA3YKD 104V (100 k) | T | 72.3/92.8 |
| R272 | 7030003360 | S.RES ERJ3GEYJ 221 V (220) | T | 81.4/100.8 |
| R273 | 7030007230 | S.RES ERA3YED 102V (1 k) | T | 81.9/93.9 |
| R274 | 7030003320 | S.RES ERJ3GEYJ 101 V (100) | T | 73.2/102.1 |
| R301 | 7030003200 | S.RES ERJ3GEYJ 100 V (10) | T | 86.5/30.6 |
| R302 | 7030007230 | S.RES ERA3YED 102V (1 k) | T | 86.5/29.3 |
| R303 | 7030003360 | S.RES ERJ3GEYJ 221 V (220) | T | 92.1/28 |
| R304 | 7030003490 | S.RES ERJ3GEYJ 272 V (2.7 k) | T | 94/30.1 |
| R305 | 7030003510 | S.RES ERJ3GEYJ 392 V (3.9 k) | T | 95.3/30.1 |
| R306 | 7030003360 | S.RES ERJ3GEYJ 221 V (220) | T | 94.7/32.2 |
| R307 | 7030009841 | S.RES ERA3YHD 330V (33) | T | 92.1/32.2 |
| R308 | 7030009851 | S.RES ERA3YED 271V (270) | B | 92.6/43.4 |
| R309 | 7030003540 | S.RES ERJ3GEYJ 682 V (6.8 k) | B | 89.1/47 |
| R310 | 7030003500 | S.RES ERJ3GEYJ 332 V (3.3 k) | B | 92.6/47 |
| R311 | 7030003350 | S.RES ERJ3GEYJ 181 V (180) | B | 89.1/45.2 |
| R312 | 7030003360 | S.RES ERJ3GEYJ 221 V (220) | B | 92.4/27.8 |
| R313 | 7030003490 | S.RES ERJ3GEYJ 272 V (2.7 k) | B | 91.1/23.1 |
| R314 | 7030003510 | S.RES ERJ3GEYJ 392 V (3.9 k) | B | 88.3/23.1 |
| R315 | 7030003360 | S.RES ERJ3GEYJ 221 V (220) | B | 87.5/25.1 |
| R316 | 7030003280 | S.RES ERJ3GEYJ 470 V (47) | B | 78.3/26.1 |
| R317 | 7030006220 | S.RES ERJ12YJ470U (47) | B | 90/31.4 |
| R318 | 7030009841 | S.RES ERA3YHD 330V (33) | B | 92.6/41.6 |
| R341 | 7030007230 | S.RES ERA3YED 102V (1 k) | T | 92.1/40.1 |
| R342 | 7030005321 | S.RES ERA3YED 103V (10 k) | T | 86.5/32.2 |
| R343 | 7030007230 | S.RES ERA3YED 102V (1 k) | T | 89.3/34.8 |
| R351 | 7030003200 | S.RES ERJ3GEYJ 100 V (10) | B | 89.1/52.4 |
| R352 | 7030010980 | S.RES ERA3YHD 470V (47) | T | 89.3/55.8 |
| R353 | 7030009591 | S.RES ERA3YED 472V (4.7 k) | T | 89.3/54.5 |
| R354 | 7030009591 | S.RES ERA3YED 472V (4.7 k) | T | 89.3/50.4 |
| R355 | 7030009591 | S.RES ERA3YED 472V (4.7 k) | T | 89.3/53.2 |
| R356 | 7030003320 | S.RES ERJ3GEYJ 101 V (100) | T | 89.3/57.1 |
| R357 | 7310005580 | S.TRI TMC3ADCS3X 4.7K | T | 93.6/52.7 |
| R358 | 7030010980 | S.RES ERA3YHD 470V (47) | T | 94.9/56.4 |
| R359 | 7030003320 | S.RES ERJ3GEYJ 101 V (100) | T | 94.9/59 |
| R360 | 7030003320 | S.RES ERJ3GEYJ 101 V (100) | B | 92.6/63.9 |
| R361 | 7030003490 | S.RES ERJ3GEYJ 272 V (2.7 k) | B | 89.2/62.1 |
| R362 | 7030003510 | S.RES ERJ3GEYJ 392 V (3.9 k) | B | 92.6/60.3 |
| R363 | 7030003320 | S.RES ERJ3GEYJ 101 V (100) | B | 92.6/65.7 |
| R364 | 7030003410 | S.RES ERJ3GEYJ 561 V (560) | T | 94.9/82.9 |
| R365 | 7030007860 | S.RES ERJ3GEYJ 8R2V (8.2) | T | 92/83.4 |
| R366 | 7030003410 | S.RES ERJ3GEYJ 561 V (560) | T | 94.9/84.2 |
| R368 | 7030005321 | S.RES ERA3YED 103V (10 k) | T | 86.1/59.6 |
| R369 | 7030008240 | S.RES ERJ12Y0R00U | B | 95.3/57.1 |
| R421 | 7030007230 | S.RES ERA3YED 102V (1 k) | T | 92.1/87.8 |
| R425 | 7030003410 | S.RES ERJ3GEYJ 561 V (560) | T | 90.1/81.6 |
| R427 | 7030003320 | S.RES ERJ3GEYJ 101 V (100) | B | 86.8/87.3 |
| R428 | 7030009861 | S.RES ERA3YED 471V (470) | B | 92.1/88 |
| R441 | 7030007230 | S.RES ERA3YED 102V (1 k) | T | 92.1/75.5 |
| R442 | 7030005321 | S.RES ERA3YED 103V (10 k) | T | 88.9/70.9 |
| R443 | 7030007230 | S.RES ERA3YED 102V (1 k) | T | 88.9/72.2 |
| R501 | 7030003360 | S.RES ERJ3GEYJ 221 V (220) | T | 29.2/153.1 |
| R502 | 7030007230 | S.RES ERA3YED 102V (1 k) | T | 27.9/153.1 |
| R503 | 7030007230 | S.RES ERA3YED 102V (1 k) | T | 26.5/153.1 |
| R504 | 7030007230 | S.RES ERA3YED 102V (1 k) | T | 25.2/153.1 |
| R506 | 7030003800 | S.RES ERJ3GEYJ 105 V (1 M) | T | 34/154.5 |
| R509 | 7030007230 | S.RES ERA3YED 102V (1 k) | T | 42.5/136 |
| R510 | 7030007220 | S.RES ERA3YED 202V (2 k) | T | 14.6/153.6 |
| R511 | 7030007220 | S.RES ERA3YED 202V (2 k) | T | 17.2/153.6 |
| R512 | 7030007220 | S.RES ERA3YED 202V (2 k) | T | 17.2/152.3 |
| R513 | 7030007220 | S.RES ERA3YED 202V (2 k) | T | 17.2/151 |
| R514 | 7030007220 | S.RES ERA3YED 202V (2 k) | T | 17.2/149.7 |
| R515 | 7030007220 | S.RES ERA3YED 202V (2 k) | T | 17.2/148.3 |
| R516 | 7030007220 | S.RES ERA3YED 202V (2 k) | T | 17.2/147 |
| R517 | 7030007220 | S.RES ERA3YED 202V (2 k) | T | 17.2/145.7 |
| R518 | 7030007200 | S.RES ERA3YEB 202V (2 k) | T | 17.2/144.4 |
| R519 | 7030007200 | S.RES ERA3YEB 202V (2 k) | T | 17.2/142.7 |
| R520 | 7030007200 | S.RES ERA3YEB 202V (2 k) | T | 17.2/141.4 |
| R521 | 7030007200 | S.RES ERA3YEB 202V (2 k) | T | 17.2/140.1 |
| R522 | 7030007200 | S.RES ERA3YEB 202V (2 k) | T | 17.2/138.8 |
| R523 | 7030007230 | S.RES ERA3YED 102V (1 k) | T | 14.6/152.3 |
| R524 | 7030007230 | S.RES ERA3YED 102V (1 k) | T | 14.6/151 |
| R525 | 7030007230 | S.RES ERA3YED 102V (1 k) | T | 14.6/149.7 |
| R526 | 7030007230 | S.RES ERA3YED 102V (1 k) | T | 14.6/148.3 |
| R527 | 7030007230 | S.RES ERA3YED 102V (1 k) | T | 14.6/147 |
| R528 | 7030007230 | S.RES ERA3YED 102V (1 k) | T | 14.6/145.7 |
| R529 | 7030007210 | S.RES ERA3YEB 102V (1 k) | T | 14.6/144.4 |
| R530 | 7030007210 | S.RES ERA3YEB 102V (1 k) | T | 14.6/142.7 |
| R531 | 7030007210 | S.RES ERA3YEB 102V (1 k) | T | 14.6/141.4 |
| R532 | 7030007210 | S.RES ERA3YEB 102V (1 k) | T | 14.6/140.1 |
| R533 | 7030007210 | S.RES ERA3YEB 102V (1 k) | T | 14.6/138.8 |
| R534 | 7030003860 | S.RES ERJ3GE JPW V | T | 22.2/127.6 |
| R535 | 7030003800 | S.RES ERJ3GEYJ 105 V (1 M) | T | 24.8/129.8 |
| R536 | 7030003200 | S.RES ERJ3GEYJ 100 V (10) | T | 28/128.3 |
| R537 | 7030007230 | S.RES ERA3YED 102V (1 k) | T | 30.3/131.9 |
| R538 | 7030003360 | S.RES ERJ3GEYJ 221 V (220) | B | 34.8/146.5 |
| R540 | 7030007230 | S.RES ERA3YED 102V (1 k) | B | 52.3/142.8 |
| R544 | 7030005871 | S.RES ERA3YKD 104V (100 k) | T | 69.4/140.4 |
| R545 | 7030005871 | S.RES ERA3YKD 104V (100 k) | T | 69.4/139.1 |
| R546 | 7030009861 | S.RES ERA3YED 471V (470) | T | 67.4/150.7 |
| R548 | 7030009591 | S.RES ERA3YED 472V (4.7 k) | B | 43.4/136.5 |
| R550 | 7030009691 | S.RES ERA3YED 101V (100) | B | 43.4/134.7 |
| R554 | 7030009891 | S.RES ERA3YED 151V (150) | B | 47.2/133.9 |
| R555 | 7030003380 | S.RES ERJ3GEYJ 331 V (330) | B | 61.9/142.1 |
| R556 | 7030005981 | S.RES ERA3YED 333V (33 k) | B | 44.2/128.2 |
| R561 | 7030003200 | S.RES ERJ3GEYJ 100 V (10) | T | 71.3/148.5 |
| R562 | 7030003360 | S.RES ERJ3GEYJ 221 V (220) | T | 65.7/155.5 |
| R563 | 7030003490 | S.RES ERJ3GEYJ 272 V (2.7 k) | T | 70.4/151.9 |
| R564 | 7030003510 | S.RES ERJ3GEYJ 392 V (3.9 k) | T | 70.4/150.6 |
| R565 | 7030003360 | S.RES ERJ3GEYJ 221 V (220) | T | 67/155.5 |
| R570 | 7030003230 | S.RES ERJ3GEYJ 180 V (18) | T | 63.1/155.5 |
| R571 | 7030003230 | S.RES ERJ3GEYJ 180 V (18) | T | 58.5/155 |
| R572 | 7030003290 | S.RES ERJ3GEYJ 560 V (56) | B | 57.2/156.3 |
| R573 | 7030003270 | S.RES ERJ3GEYJ 390 V (39) | T | 61.8/155.5 |

M.=Mounted side (T: Mounted on the Top side, B: Mounted on the Bottom side)
S.=Surface mount

## [RXPLL-B UNIT]

| REF NO. | ORDER NO. | DESCRIPTION | M. | H/V LOCATION |
|---|---|---|---|---|
| R574 | 7030003240 | S.RES ERJ3GEYJ 220 V (22) | T | 60.5/155.5 |
| R575 | 7030003270 | S.RES ERJ3GEYJ 390 V (39) | T | 58.5/156.3 |
| R580 | 7030009861 | S.RES ERA3YED 471V (470) | T | 41.9/153.7 |
| R581 | 7030003360 | S.RES ERJ3GEYJ 221 V (220) | T | 41.9/145.5 |
| R582 | 7030003600 | S.RES ERJ3GEYJ 223 V (22 k) | T | 41.9/149.5 |
| R587 | 7030003300 | S.RES ERJ3GEYJ 680 V (68) | T | 55.7/157.6 |
| R588 | 7030003340 | S.RES ERJ3GEYJ 151 V (150) | T | 58.5/158.9 |
| R589 | 7030003300 | S.RES ERJ3GEYJ 680 V (68) | T | 55.7/158.9 |
| R591 | 7030003320 | S.RES ERJ3GEYJ 101 V (100) | T | 58.2/169.9 |
| R592 | 7030005321 | S.RES ERA3YED 103V (10 k) | T | 58.5/167.9 |
| R593 | 7030003480 | S.RES ERJ3GEYJ 222 V (2.2 k) | T | 58.5/165.1 |
| R594 | 7030003320 | S.RES ERJ3GEYJ 101 V (100) | B | 61.9/168.1 |
| R595 | 7030003640 | S.RES ERJ3GEYJ 473 V (47 k) | B | 55.9/165.3 |
| R596 | 7030003540 | S.RES ERJ3GEYJ 682 V (6.8 k) | B | 54.7/168.9 |
| R601 | 7030009851 | S.RES ERA3YED 271V (270) | T | 51.7/118.2 |
| R602 | 7030003470 | S.RES ERJ3GEYJ 182 V (1.8 k) | T | 49.5/120.1 |
| R606 | 7030003360 | S.RES ERJ3GEYJ 221 V (220) | T | 45.3/115.6 |
| R607 | 7030003480 | S.RES ERJ3GEYJ 222 V (2.2 k) | T | 48.6/115.4 |
| R608 | 7030007230 | S.RES ERA3YED 102V (1 k) | T | 49.9/115.4 |
| R651 | 7030007230 | S.RES ERA3YED 102V (1 k) | B | 23.5/177.1 |
| R652 | 7030003360 | S.RES ERJ3GEYJ 221 V (220) | T | 13.5/170.8 |
| R653 | 7030007230 | S.RES ERA3YED 102V (1 k) | T | 13.5/169.5 |
| R654 | 7030007230 | S.RES ERA3YED 102V (1 k) | T | 13.5/168.2 |
| R656 | 7030003800 | S.RES ERJ3GEYJ 105 V (1 M) | T | 13.4/165.6 |
| R657 | 7030003320 | S.RES ERJ3GEYJ 101 V (100) | T | 20.2/161.4 |
| R661 | 7030007220 | S.RES ERA3YED 202V (2 k) | T | 31.7/162.8 |
| R662 | 7030007220 | S.RES ERA3YED 202V (2 k) | T | 31.7/164.1 |
| R663 | 7030007220 | S.RES ERA3YED 202V (2 k) | T | 31.7/165.4 |
| R664 | 7030007220 | S.RES ERA3YED 202V (2 k) | T | 31.7/166.7 |
| R665 | 7030007220 | S.RES ERA3YED 202V (2 k) | T | 31.7/168 |
| R666 | 7030007220 | S.RES ERA3YED 202V (2 k) | T | 31.7/169.3 |
| R667 | 7030007220 | S.RES ERA3YED 202V (2 k) | T | 31.7/170.6 |
| R668 | 7030007220 | S.RES ERA3YED 202V (2 k) | T | 31.7/171.9 |
| R669 | 7030007200 | S.RES ERA3YEB 202V (2 k) | T | 31.7/173.2 |
| R670 | 7030007200 | S.RES ERA3YEB 202V (2 k) | T | 31.7/174.5 |
| R671 | 7030007200 | S.RES ERA3YEB 202V (2 k) | T | 31.7/175.8 |
| R673 | 7030007230 | S.RES ERA3YED 102V (1 k) | T | 34.3/165.4 |
| R674 | 7030007230 | S.RES ERA3YED 102V (1 k) | T | 34.3/166.7 |
| R675 | 7030007230 | S.RES ERA3YED 102V (1 k) | T | 34.3/168 |
| R676 | 7030007230 | S.RES ERA3YED 102V (1 k) | T | 34.3/169.3 |
| R677 | 7030007230 | S.RES ERA3YED 102V (1 k) | T | 34.3/170.6 |
| R678 | 7030007230 | S.RES ERA3YED 102V (1 k) | T | 34.3/171.9 |
| R679 | 7030007210 | S.RES ERA3YEB 102V (1 k) | T | 34.3/173.2 |
| R680 | 7030007210 | S.RES ERA3YEB 102V (1 k) | T | 34.3/174.5 |
| R681 | 7030007210 | S.RES ERA3YEB 102V (1 k) | T | 34.3/175.8 |
| R683 | 7030003860 | S.RES ERJ3GE JPW V | B | 58.4/167.8 |
| R685 | 7030003460 | S.RES ERJ3GEYJ 152 V (1.5 k) | T | 38.4/169.7 |
| R686 | 7030003320 | S.RES ERJ3GEYJ 101 V (100) | T | 40.3/163.4 |
| R687 | 7030003470 | S.RES ERJ3GEYJ 182 V (1.8 k) | T | 37.4/165.1 |
| R688 | 7030003480 | S.RES ERJ3GEYJ 222 V (2.2 k) | T | 34.3/162.8 |
| R689 | 7030003360 | S.RES ERJ3GEYJ 221 V (220) | T | 33.6/161.5 |
| R690 | 7030009851 | S.RES ERA3YED 271V (270) | T | 46.4/165.3 |
| R691 | 7030003230 | S.RES ERJ3GEYJ 180 V (18) | T | 48.4/164.8 |
| R692 | 7030009851 | S.RES ERA3YED 271V (270) | T | 46.4/166.6 |
| R693 | 7030003360 | S.RES ERJ3GEYJ 221 V (220) | T | 37.1/169.7 |
| R704 | 7030009841 | S.RES ERA3YHD 330V (33) | T | 30.8/113.7 |
| R705 | 7030003600 | S.RES ERJ3GEYJ 223 V (22 k) | T | 29.5/113.7 |
| R706 | 7030005321 | S.RES ERA3YED 103V (10 k) | T | 28.2/113.7 |
| R707 | 7030009861 | S.RES ERA3YED 471V (470) | T | 30.8/108.1 |
| R708 | 7030003410 | S.RES ERJ3GEYJ 561 V (560) | T | 43.3/118.8 |
| R709 | 7030007860 | S.RES ERJ3GEYJ 8R2V (8.2) | T | 43.3/116 |
| R710 | 7030003410 | S.RES ERJ3GEYJ 561 V (560) | T | 43.8/121.1 |
| R711 | 7030003320 | S.RES ERJ3GEYJ 101 V (100) | T | 37.9/154.5 |
| R1000 | 7030003320 | S.RES ERJ3GEYJ 101 V (100) | B | 177.1/11.2 |
| R1003 | 7030010980 | S.RES ERA3YHD 470V (47) | T | 162/13.4 |
| R1004 | 7030007230 | S.RES ERA3YED 102V (1 k) | B | 166.4/12.9 |
| R1005 | 7030003550 | S.RES ERJ3GEYJ 822 V (8.2 k) | T | 144/26.1 |
| R1006 | 7030007230 | S.RES ERA3YED 102V (1 k) | T | 145.3/26.1 |
| R1007 | 7030004030 | S.RES ERJ3GEYJ 5R6 V (5.6) | B | 153.7/33.6 |
| R1008 | 7030003240 | S.RES ERJ3GEYJ 220 V (22) | T | 144/36.4 |
| R1009 | 7030010980 | S.RES ERA3YHD 470V (47) | T | 182.4/29.3 |
| R1010 | 7030010980 | S.RES ERA3YHD 470V (47) | T | 154.5/33.2 |
| R1013 | 7030007230 | S.RES ERA3YED 102V (1 k) | B | 172.7/40.8 |
| R1014 | 7030007230 | S.RES ERA3YED 102V (1 k) | B | 156.7/40.8 |
| R1015 | 7030003530 | S.RES ERJ3GEYJ 562 V (5.6 k) | B | 172.7/45.4 |
| R1016 | 7030003530 | S.RES ERJ3GEYJ 562 V (5.6 k) | B | 156.7/45.4 |
| R1017 | 7030003530 | S.RES ERJ3GEYJ 562 V (5.6 k) | B | 169.7/12.9 |
| R1020 | 7030003390 | S.RES ERJ3GEYJ 391 V (390) | T | 179.6/18.3 |
| R1021 | 7030003220 | S.RES ERJ3GEYJ 150 V (15) | T | 177/19.4 |
| R1022 | 7030003390 | S.RES ERJ3GEYJ 391 V (390) | T | 180.9/19.4 |
| R1023 | 7030010980 | S.RES ERA3YHD 470V (47) | B | 149.3/33.5 |
| R1024 | 7030003200 | S.RES ERJ3GEYJ 100 V (10) | B | 150.1/31.4 |
| R1025 | 7030003300 | S.RES ERJ3GEYJ 680 V (68) | T | 178.3/19.4 |
| R1026 | 7030003480 | S.RES ERJ3GEYJ 222 V (2.2 k) | B | 171.2/14.2 |
| R1027 | 7030003200 | S.RES ERJ3GEYJ 100 V (10) | B | 176.5/38.3 |
| R1028 | 7030003200 | S.RES ERJ3GEYJ 100 V (10) | B | 160.5/38.3 |
| R1029 | 7030010980 | S.RES ERA3YHD 470V (47) | B | 178.2/46.1 |
| R1030 | 7030010980 | S.RES ERA3YHD 470V (47) | B | 162.2/46.1 |
| R1051 | 7030003800 | S.RES ERJ3GEYJ 105 V (1 M) | T | 178.6/93.1 |
| R1054 | 7030011500 | S.RES ERA3YHD 270V (27) | T | 149.1/83.2 |
| R1055 | 7030000010 | S.RES MCR10EZHJ JPW (000) | T | 162.1/76.6 |
| R1056 | 7030000010 | S.RES MCR10EZHJ JPW (000) | T | 177.5/71.1 |
| R1071 | 7030010980 | S.RES ERA3YHD 470V (47) | B | 165.9/76.4 |
| R1072 | 7030000010 | S.RES MCR10EZHJ JPW (000) | T | 133.9/84.1 |
| R1073 | 7030000010 | S.RES MCR10EZHJ JPW (000) | T | 135.5/85.7 |
| R1101 | 7310004860 | S.TRI EVM-3YSX50 B53 (502) | T | 180.1/90.2 |
| R1102 | 7030005871 | S.RES ERA3YKD 104V (100 k) | B | 180.2/100.6 |
| R1103 | 7030007680 | S.RES ERJ8ENF 47R0V (47) | T | 181.7/104.7 |
| R1104 | 7030007680 | S.RES ERJ8ENF 47R0V (47) | T | 173.6/107.2 |
| R1105 | 7030003500 | S.RES ERJ3GEYJ 332 V (3.3 k) | T | 176.7/87.7 |
| R1106 | 7030009620 | S.RES ERJ12YJ120U (12) | B | 179.6/117.9 |
| R1107 | 7030010980 | S.RES ERA3YHD 470V (47) | T | 175.6/120.3 |
| R1109 | 7030007180 | S.RES ERJ12YJ150U (15) | B | 176.5/125.7 |
| R1110 | 7030003480 | S.RES ERJ3GEYJ 222 V (2.2 k) | B | 168.5/131.6 |

## [RXPLL-B UNIT]

| REF NO. | ORDER NO. | DESCRIPTION | M. | H/V LOCATION |
|---|---|---|---|---|
| R1111 | 7030003480 | S.RES ERJ3GEYJ 222 V (2.2 k) | T | 166.2/130.4 |
| R1113 | 7030003480 | S.RES ERJ3GEYJ 222 V (2.2 k) | T | 166.2/131.7 |
| R1114 | 7030004040 | S.RES ERJ3GEYJ 4R7 V (4.7) | T | 179.2/125.3 |
| R1115 | 7030006240 | S.RES ERJ12YJ181U (180) | B | 176.5/129.9 |
| R1116 | 7030007230 | S.RES ERA3YED 102V (1 k) | T | 175.7/135.3 |
| R1117 | 7030004040 | S.RES ERJ3GEYJ 4R7 V (4.7) | T | 175.7/134 |
| R1118 | 7030003480 | S.RES ERJ3GEYJ 222 V (2.2 k) | T | 175.4/132 |
| R1119 | 7030003470 | S.RES ERJ3GEYJ 182 V (1.8 k) | T | 178/132 |
| R1120 | 7030006070 | S.RES ERJ12YJ101U (100) | B | 177.3/141 |
| R1121 | 7030003240 | S.RES ERJ3GEYJ 220 V (22) | T | 178.6/139.6 |
| R1122 | 7030010980 | S.RES ERA3YHD 470V (47) | T | 171.9/131.1 |
| R1123 | 7030003480 | S.RES ERJ3GEYJ 222 V (2.2 k) | T | 165.7/137.4 |
| R1124 | 7030003460 | S.RES ERJ3GEYJ 152 V (1.5 k) | T | 165.7/140 |
| R1125 | 7030003420 | S.RES ERJ3GEYJ 681 V (680) | B | 171/142.2 |
| R1126 | 7030003200 | S.RES ERJ3GEYJ 100 V (10) | T | 168.4/142.2 |
| R1127 | 7030010980 | S.RES ERA3YHD 470V (47) | T | 174.6/142.9 |
| R1128 | 7030003470 | S.RES ERJ3GEYJ 182 V (1.8 k) | T | 174.6/146.6 |
| R1129 | 7030003470 | S.RES ERJ3GEYJ 182 V (1.8 k) | T | 174.6/148.4 |
| R1130 | 7030003480 | S.RES ERJ3GEYJ 222 V (2.2 k) | T | 180.6/146.4 |
| R1131 | 7030003640 | S.RES ERJ3GEYJ 473 V (47 k) | B | 177.4/90.7 |
| R1132 | 7310004860 | S.TRI EVM-3YSX50 B53 (502) | T | 179.4/84.3 |
| R1133 | 7030003500 | S.RES ERJ3GEYJ 332 V (3.3 k) | T | 175.5/82.5 |
| R1134 | 7030003640 | S.RES ERJ3GEYJ 473 V (47 k) | T | 175.5/83.8 |
| R1135 | 7030005871 | S.RES ERA3YKD 104V (100 k) | T | 182.2/97.8 |
| R1151 | 7030003280 | S.RES ERJ3GEYJ 470 V (47) | T | 134.8/63.9 |
| R1152 | 7030003280 | S.RES ERJ3GEYJ 470 V (47) | B | 117.2/56.3 |
| R1203 | 7030000010 | S.RES MCR10EZHJ JPW (000) | T | 157.5/74.9 |
| R1211 | 7030003860 | S.RES ERJ3GE JPW V | T | 117.6/7.8 |
| R1212 | 7030003860 | S.RES ERJ3GE JPW V | T | 124.8/51.1 |
| R1213 | 7030003200 | S.RES ERJ3GEYJ 100 V (10) | B | 118.8/25 |
| R1214 | 7030003200 | S.RES ERJ3GEYJ 100 V (10) | B | 109/25 |
| R1216 | 7030010980 | S.RES ERA3YHD 470V (47) | B | 120.7/31.6 |
| R1217 | 7030010980 | S.RES ERA3YHD 470V (47) | B | 111.2/31.6 |
| R1220 | 7030010980 | S.RES ERA3YHD 470V (47) | T | 118.7/17.3 |
| R1221 | 7030007230 | S.RES ERA3YED 102V (1 k) | T | 116.4/39.9 |
| R1222 | 7030003530 | S.RES ERJ3GEYJ 562 V (5.6 k) | T | 116.4/38.6 |
| R1223 | 7030010980 | S.RES ERA3YHD 470V (47) | T | 109.3/17.1 |
| R1224 | 7030007230 | S.RES ERA3YED 102V (1 k) | T | 106.6/39.9 |
| R1225 | 7030003530 | S.RES ERJ3GEYJ 562 V (5.6 k) | T | 106.6/38.6 |
| R1226 | 7030003410 | S.RES ERJ3GEYJ 561 V (560) | T | 158.9/92.9 |
| R1227 | 7030003410 | S.RES ERJ3GEYJ 561 V (560) | T | 154/92.9 |
| R1228 | 7310004860 | S.TRI EVM-3YSX50 B53 (502) | T | 156.4/92.9 |
| R1229 | 7030003480 | S.RES ERJ3GEYJ 222 V (2.2 k) | B | 156.1/117.4 |
| R1230 | 7030003480 | S.RES ERJ3GEYJ 222 V (2.2 k) | B | 156.1/119.2 |
| R1231 | 7030003480 | S.RES ERJ3GEYJ 222 V (2.2 k) | B | 156.1/121 |
| R1232 | 7030003600 | S.RES ERJ3GEYJ 223 V (22 k) | T | 156.3/97.5 |
| R1233 | 7030010980 | S.RES ERA3YHD 470V (47) | B | 152.5/109.4 |
| R1301 | 7030010980 | S.RES ERA3YHD 470V (47) | B | 155.7/97.5 |
| R1302 | 7030003860 | S.RES ERJ3GE JPW V | T | 159.3/116.8 |
| R1304 | 7030003620 | S.RES ERJ3GEYJ 333 V (33 k) | T | 156.5/123.2 |
| R1306 | 7030006230 | S.RES ERJ12YJ151U (150) | B | 153.8/124.8 |
| R1307 | 7030003300 | S.RES ERJ3GEYJ 680 V (68) | T | 156.5/128.4 |
| R1311 | 7030000010 | S.RES MCR10EZHJ JPW (000) | T | 140.3/98.8 |
| R1312 | 7030000010 | S.RES MCR10EZHJ JPW (000) | T | 143.2/104.1 |
| R1313 | 7030000010 | S.RES MCR10EZHJ JPW (000) | T | 143.2/101.5 |
| R1357 | 7030007230 | S.RES ERA3YED 102V (1 k) | B | 140.7/70.4 |
| R1358 | 7030003530 | S.RES ERJ3GEYJ 562 V (5.6 k) | B | 142.8/70.4 |
| R1359 | 7030010980 | S.RES ERA3YHD 470V (47) | T | 139.4/64.7 |
| R1360 | 7030007230 | S.RES ERA3YED 102V (1 k) | B | 146.4/67.1 |
| R1361 | 7030003380 | S.RES ERJ3GEYJ 331 V (330) | T | 139.3/68.8 |
| R1362 | 7030005871 | S.RES ERA3YKD 104V (100 k) | B | 144.6/70.4 |
| R1401 | 7030003200 | S.RES ERJ3GEYJ 100 V (10) | T | 131.5/103.3 |
| R1402 | 7030003300 | S.RES ERJ3GEYJ 680 V (68) | T | 126.4/111 |
| R1403 | 7030007230 | S.RES ERA3YED 102V (1 k) | T | 132/107.7 |
| R1404 | 7030009861 | S.RES ERA3YED 471V (470) | T | 134.6/104.3 |
| R1405 | 7030003340 | S.RES ERJ3GEYJ 151 V (150) | T | 137.2/104.3 |
| R1406 | 7030009591 | S.RES ERA3YED 472V (4.7 k) | T | 135.2/106.2 |
| R1407 | 7030003550 | S.RES ERJ3GEYJ 822 V (8.2 k) | B | 135.4/104.3 |
| R1408 | 7030003200 | S.RES ERJ3GEYJ 100 V (10) | T | 120.9/109 |
| R1409 | 7030009591 | S.RES ERA3YED 472V (4.7 k) | T | 120.5/114.9 |
| R1410 | 7030006091 | S.RES ERA3YED 822V (8.2 k) | B | 124.2/114.4 |
| R1411 | 7030005871 | S.RES ERA3YKD 104V (100 k) | T | 123.2/116.2 |
| R1412 | 7030003200 | S.RES ERJ3GEYJ 100 V (10) | T | 126.4/112.3 |
| R1413 | 7030003200 | S.RES ERJ3GEYJ 100 V (10) | T | 126.4/113.6 |
| R1414 | 7030005871 | S.RES ERA3YKD 104V (100 k) | B | 120.9/114.4 |
| R1415 | 7030010980 | S.RES ERA3YHD 470V (47) | T | 127/114.9 |
| R1416 | 7030003320 | S.RES ERJ3GEYJ 101 V (100) | B | 139.7/122.9 |
| R1417 | 7030000010 | S.RES MCR10EZHJ JPW (000) | B | 130.1/124.5 |
| R1418 | 7030000010 | S.RES MCR10EZHJ JPW (000) | B | 130.1/122.5 |
| R1419 | 7030003860 | S.RES ERJ3GE JPW V | B | 129.4/114.9 |
| R1501 | 7030010980 | S.RES ERA3YHD 470V (47) | T | 126.5/125.2 |
| R1502 | 7030009841 | S.RES ERA3YHD 330V (33) | T | 133/131 |
| R1503 | 7030009851 | S.RES ERA3YED 271V (270) | T | 130/146.3 |
| R1504 | 7030011050 | S.RES ERA3YHD 100V (10) | T | 131.3/143.5 |
| R1505 | 7030006091 | S.RES ERA3YED 822V (8.2 k) | B | 137.7/140.3 |
| R1506 | 7030007230 | S.RES ERA3YED 102V (1 k) | B | 137.7/147 |
| R1507 | 7030007230 | S.RES ERA3YED 102V (1 k) | T | 132.6/146.3 |
| R1508 | 7030007230 | S.RES ERA3YED 102V (1 k) | T | 133.9/146.3 |
| R1509 | 7030007230 | S.RES ERA3YED 102V (1 k) | T | 139.1/158.9 |
| R1510 | 7030005321 | S.RES ERA3YED 103V (10 k) | T | 139.1/157.6 |
| R1511 | 7030009861 | S.RES ERA3YED 471V (470) | T | 136.5/157.6 |
| R1512 | 7030003380 | S.RES ERJ3GEYJ 331 V (330) | T | 129.6/151.6 |
| R1513 | 7030003380 | S.RES ERJ3GEYJ 331 V (330) | T | 129.6/155.5 |
| R1514 | 7030005321 | S.RES ERA3YED 103V (10 k) | T | 129.6/160.8 |
| R1515 | 7030005321 | S.RES ERA3YED 103V (10 k) | T | 133.5/160.8 |
| R1516 | 7310005610 | S.TRI TMC3ADC13X 1K | T | 119.2/157.7 |
| R1517 | 7030005321 | S.RES ERA3YED 103V (10 k) | T | 115.3/158 |
| R1518 | 7030005321 | S.RES ERA3YED 103V (10 k) | T | 134.8/160.8 |
| R1519 | 7030005321 | S.RES ERA3YED 103V (10 k) | T | 131.7/171.7 |
| R1520 | 7030005321 | S.RES ERA3YED 103V (10 k) | T | 136.1/160.8 |
| R1521 | 7030010980 | S.RES ERA3YHD 470V (47) | T | 126.5/133 |
| R1522 | 7030009841 | S.RES ERA3YHD 330V (33) | T | 126/141.1 |
| R1523 | 7030009851 | S.RES ERA3YED 271V (270) | T | 123.7/146.3 |
| R1524 | 7030011050 | S.RES ERA3YHD 100V (10) | T | 122.4/143.5 |

M.=Mounted side (T: Mounted on the Top side, B: Mounted on the Bottom side)
S.=Surface mount

## [RXPLL-B UNIT]

| REF NO. | ORDER NO. | DESCRIPTION | M. | H/V LOCATION |
|---|---|---|---|---|
| R1525 | 7030007230 | S.RES ERA3YED 102V (1 k) | B | 128.8/147 |
| R1526 | 7030003460 | S.RES ERJ3GEYJ 152 V (1.5 k) | B | 137.7/142.1 |
| R1527 | 7030007230 | S.RES ERA3YED 102V (1 k) | T | 119.8/146.3 |
| R1528 | 7030007230 | S.RES ERA3YED 102V (1 k) | T | 121.1/146.3 |
| R1529 | 7030007230 | S.RES ERA3YED 102V (1 k) | T | 115.3/152.3 |
| R1530 | 7030003380 | S.RES ERJ3GEYJ 331 V (330) | T | 128/151.6 |
| R1531 | 7030003380 | S.RES ERJ3GEYJ 331 V (330) | T | 128/155.5 |
| R1532 | 7030005321 | S.RES ERA3YED 103V (10 k) | T | 124.1/160.8 |
| R1533 | 7030005321 | S.RES ERA3YED 103V (10 k) | T | 128/160.8 |
| R1534 | 7030005321 | S.RES ERA3YED 103V (10 k) | T | 122.8/160.8 |
| R1535 | 7030005321 | S.RES ERA3YED 103V (10 k) | T | 121.5/160.8 |
| R1536 | 7030005321 | S.RES ERA3YED 103V (10 k) | T | 129/171.7 |
| R1537 | 7030003320 | S.RES ERJ3GEYJ 101 V (100) | T | 115.5/164.5 |
| R1538 | 7030003320 | S.RES ERJ3GEYJ 101 V (100) | T | 107.1/170.1 |
| R1539 | 7030008061 | S.RES ERA3YED 222V (2.2 k) | B | 131.8/176.4 |
| R1540 | 7030010390 | S.RES ERA3YED 821V (820) | B | 128.7/177.1 |
| R1541 | 7030003320 | S.RES ERJ3GEYJ 101 V (100) | T | 107.1/178.8 |
| R1542 | 7030003320 | S.RES ERJ3GEYJ 101 V (100) | T | 115.5/173.2 |
| R1543 | 7030009691 | S.RES ERA3YED 101V (100) | B | 130.6/179 |
| R1651 | 7030003380 | S.RES ERJ3GEYJ 331 V (330) | B | 100.9/144.8 |
| R1652 | 7030003220 | S.RES ERJ3GEYJ 150 V (15) | B | 102.7/144.8 |
| R1653 | 7030003380 | S.RES ERJ3GEYJ 331 V (330) | B | 101.9/142.9 |
| R1654 | 7030010980 | S.RES ERA3YHD 470V (47) | B | 105.5/142.2 |
| R1655 | 7030009861 | S.RES ERA3YED 471V (470) | B | 108.8/140 |
| R1656 | 7030003630 | S.RES ERJ3GEYJ 393 V (39 k) | B | 108.3/142.2 |
| R1657 | 7030005871 | S.RES ERA3YKD 104V (100 k) | T | 108/133.1 |
| R1658 | 7030003320 | S.RES ERJ3GEYJ 101 V (100) | T | 110.6/133.1 |
| R1659 | 7030009691 | S.RES ERA3YED 101V (100) | T | 115.8/124.9 |
| R1660 | 7030009691 | S.RES ERA3YED 101V (100) | T | 115.8/128.7 |
| R1661 | 7030005321 | S.RES ERA3YED 103V (10 k) | T | 135.1/175.4 |
| R1662 | 7030005321 | S.RES ERA3YED 103V (10 k) | T | 135.2/172.8 |
| R1663 | 7030005321 | S.RES ERA3YED 103V (10 k) | T | 144.3/175.4 |
| R1664 | 7030005321 | S.RES ERA3YED 103V (10 k) | T | 139.9/172.1 |
| R1665 | 7030003320 | S.RES ERJ3GEYJ 101 V (100) | T | 109.3/133.1 |
| R1667 | 7030003360 | S.RES ERJ3GEYJ 221 V (220) | T | 139.2/170.2 |
| R1668 | 7030003360 | S.RES ERJ3GEYJ 221 V (220) | T | 141.8/170.2 |
| R1670 | 7030003800 | S.RES ERJ3GEYJ 105 V (1 M) | T | 140.2/164.1 |
| R1673 | 7030007230 | S.RES ERA3YED 102V (1 k) | B | 146/174.5 |
| R1674 | 7030009851 | S.RES ERA3YED 271V (270) | B | 145.1/177.1 |
| R1675 | 7030009591 | S.RES ERA3YED 472V (4.7 k) | T | 136.6/170.2 |
| R1677 | 7030009591 | S.RES ERA3YED 472V (4.7 k) | T | 143.1/170.2 |
| R1701 | 7030003360 | S.RES ERJ3GEYJ 221 V (220) | T | 162.4/147.4 |
| R1703 | 7030003360 | S.RES ERJ3GEYJ 221 V (220) | T | 159.8/147.4 |
| R1704 | 7030003360 | S.RES ERJ3GEYJ 221 V (220) | T | 158.5/147.4 |
| R1706 | 7030003360 | S.RES ERJ3GEYJ 221 V (220) | T | 155.9/147.4 |
| R1707 | 7030003360 | S.RES ERJ3GEYJ 221 V (220) | T | 154.6/147.4 |
| R1708 | 7030003360 | S.RES ERJ3GEYJ 221 V (220) | T | 153.3/147.4 |
| R1709 | 7030003480 | S.RES ERJ3GEYJ 222 V (2.2 k) | T | 149.7/159.3 |
| R1710 | 7030003480 | S.RES ERJ3GEYJ 222 V (2.2 k) | T | 148.4/159.3 |
| R1711 | 7030003540 | S.RES ERJ3GEYJ 682 V (6.8 k) | T | 147.1/159.3 |
| R1712 | 7030003540 | S.RES ERJ3GEYJ 682 V (6.8 k) | T | 145.8/159.3 |
| R1713 | 7030003660 | S.RES ERJ3GEYJ 683 V (68 k) | T | 145.8/157.2 |
| R1714 | 7030003660 | S.RES ERJ3GEYJ 683 V (68 k) | T | 145.8/155.9 |
| R1715 | 7030003540 | S.RES ERJ3GEYJ 682 V (6.8 k) | T | 143.9/164.8 |
| R1716 | 7030007230 | S.RES ERA3YED 102V (1 k) | T | 164.2/164.8 |
| R1717 | 7030007230 | S.RES ERA3YED 102V (1 k) | T | 164.2/163.5 |
| R1718 | 7030007230 | S.RES ERA3YED 102V (1 k) | T | 164.2/162.2 |
| R1719 | 7030003660 | S.RES ERJ3GEYJ 683 V (68 k) | T | 144.3/166.8 |
| | | | | |
| C1 | 4030011600 | S.CER C1608 JB 1E 104K-T | T | 10.8/18.2 |
| C2 | 4030006880 | S.CER C1608 JB 1H 472K-T | T | 25.7/29.5 |
| C14 | 4030006880 | S.CER C1608 JB 1H 472K-T | T | 37.7/12.5 |
| C15 | 4030006880 | S.CER C1608 JB 1H 472K-T | T | 31.2/15.4 |
| C16 | 4030006880 | S.CER C1608 JB 1H 472K-T | T | 35.1/15.4 |
| C17 | 4030006880 | S.CER C1608 JB 1H 472K-T | T | 13.8/12.6 |
| C18 | 4030006880 | S.CER C1608 JB 1H 472K-T | T | 16.8/12.6 |
| C19 | 4030006880 | S.CER C1608 JB 1H 472K-T | T | 29.5/12.6 |
| C20 | 4030006880 | S.CER C1608 JB 1H 472K-T | T | 87.4/127.8 |
| C21 | 4030006880 | S.CER C1608 JB 1H 472K-T | T | 88.7/127.8 |
| C22 | 4030006880 | S.CER C1608 JB 1H 472K-T | T | 90/127.8 |
| C30 | 4030011600 | S.CER C1608 JB 1E 104K-T | T | 19.1/112.4 |
| C31 | 4030011600 | S.CER C1608 JB 1E 104K-T | T | 20.4/113.7 |
| C32 | 4030011600 | S.CER C1608 JB 1E 104K-T | T | 24.3/111.1 |
| C51 | 4510008520 | S.ELE EEE1CA470SP | T | 84/20.3 |
| C52 | 4030011600 | S.CER C1608 JB 1E 104K-T | T | 78.9/23.7 |
| C53 | 4030011600 | S.CER C1608 JB 1E 104K-T | T | 75.1/23.7 |
| C54 | 4510008500 | S.ELE EEE1CA101WP | T | 70/20.3 |
| C61 | 4510008520 | S.ELE EEE1CA470SP | T | 62.9/20.3 |
| C62 | 4030011600 | S.CER C1608 JB 1E 104K-T | B | 58.2/19.9 |
| C63 | 4030011600 | S.CER C1608 JB 1E 104K-T | B | 54.8/19.9 |
| C64 | 4510008500 | S.ELE EEE1CA101WP | T | 50.1/20.3 |
| C101 | 4030006880 | S.CER C1608 JB 1H 472K-T | T | 39.7/80.7 |
| C102 | 4030011600 | S.CER C1608 JB 1E 104K-T | T | 41.8/79.9 |
| C103 | 4510008540 | S.ELE EEE1CA100SR | T | 40.2/76.8 |
| C104 | 4030011600 | S.CER C1608 JB 1E 104K-T | T | 21.4/100.2 |
| C105 | 4030011600 | S.CER C1608 JB 1E 104K-T | T | 21.4/88.2 |
| C106 | 4030011600 | S.CER C1608 JB 1E 104K-T | T | 21.4/84.4 |
| C107 | 4030011600 | S.CER C1608 JB 1E 104K-T | T | 24.4/79.8 |
| C108 | 4030011600 | S.CER C1608 JB 1E 104K-T | T | 27/79.8 |
| C109 | 4030011600 | S.CER C1608 JB 1E 104K-T | T | 30.8/79.8 |
| C110 | 4030011600 | S.CER C1608 JB 1E 104K-T | T | 36.8/79.8 |
| C111 | 4030011600 | S.CER C1608 JB 1E 104K-T | T | 41.2/88.5 |
| C112 | 4030011600 | S.CER C1608 JB 1E 104K-T | T | 41.3/82.6 |
| C114 | 4030011600 | S.CER C1608 JB 1E 104K-T | T | 39.5/98.4 |
| C115 | 4030011600 | S.CER C1608 JB 1E 104K-T | T | 38.1/98.4 |
| C116 | 4030011600 | S.CER C1608 JB 1E 104K-T | T | 35.3/99.6 |
| C117 | 4030011600 | S.CER C1608 JB 1E 104K-T | T | 23.3/98.8 |
| C118 | 4030011600 | S.CER C1608 JB 1E 104K-T | T | 42.6/82.6 |
| C120 | 4030006880 | S.CER C1608 JB 1H 472K-T | T | 36.7/101.5 |
| C121 | 4030011600 | S.CER C1608 JB 1E 104K-T | T | 39.5/101.5 |
| C125 | 4030011600 | S.CER C1608 JB 1E 104K-T | T | 14.6/83.1 |
| C129 | 4030011600 | S.CER C1608 JB 1E 104K-T | T | 33.4/79.8 |
| C130 | 4030017810 | S.CER C1608 CH 1H 102J-T | B | 47.6/106.6 |

## [RXPLL-B UNIT]

| REF NO. | ORDER NO. | DESCRIPTION | M. | H/V LOCATION |
|---|---|---|---|---|
| C131 | 4030011600 | S.CER C1608 JB 1E 104K-T | T | 30.4/73.2 |
| C132 | 4030011600 | S.CER C1608 JB 1E 104K-T | T | 35.5/73.2 |
| C133 | 4030006880 | S.CER C1608 JB 1H 472K-T | B | 43.5/98.6 |
| C134 | 4030006880 | S.CER C1608 JB 1H 472K-T | B | 43.5/96.8 |
| C135 | 4030006880 | S.CER C1608 JB 1H 472K-T | T | 46/95.5 |
| C136 | 4030006880 | S.CER C1608 JB 1H 472K-T | T | 46/94.2 |
| C137 | 4030006880 | S.CER C1608 JB 1H 472K-T | T | 46/90.3 |
| C138 | 4030006880 | S.CER C1608 JB 1H 472K-T | T | 46.1/87.7 |
| C139 | 4030006880 | S.CER C1608 JB 1H 472K-T | B | 43.5/100.4 |
| C141 | 4030004740 | S.CER C2012 JB 1H 472K-T | B | 34.3/85.1 |
| C142 | 4550007470 | S.TAN F931A107MNMBMA | B | 19.4/87.4 |
| C150 | 4340000050 | S.MLR ECH-U 1C472JB5 | T | 16.3/64.6 |
| C151 | 4550007520 | S.TAN F931A106MAABMA | B | 38.6/92.1 |
| C152 | 4030007070 | S.CER C1608 CH 1H 330J-T | T | 19.2/59.9 |
| C153 | 4030009910 | S.CER C1608 CH 1H 040B-T | T | 21.3/55.4 |
| C154 | 4610001850 | S.TRI TZB4R200AB10R00 | T | 17.6/55.1 |
| C155 | 4030016550 | S.CER CM105 CH 151G 50AT | T | 24.1/55.4 |
| C156 | 4030016550 | S.CER CM105 CH 151G 50AT | T | 26.9/55.4 |
| C157 | 4030016550 | S.CER CM105 CH 151G 50AT | T | 26.9/56.7 |
| C158 | 4030006880 | S.CER C1608 JB 1H 472K-T | T | 23.3/53.1 |
| C159 | 4030006880 | S.CER C1608 JB 1H 472K-T | B | 23/51.9 |
| C161 | 4510008540 | S.ELE EEE1CA100SR | T | 31.3/61 |
| C162 | 4030009920 | S.CER C1608 CH 1H 050B-T | B | 33.6/53 |
| C163 | 4030011600 | S.CER C1608 JB 1E 104K-T | B | 36.9/59.6 |
| C164 | 4030006880 | S.CER C1608 JB 1H 472K-T | B | 30.3/54.8 |
| C165 | 4030006880 | S.CER C1608 JB 1H 472K-T | B | 30.8/74 |
| C166 | 4030011600 | S.CER C1608 JB 1E 104K-T | B | 34.9/78.2 |
| C167 | 4030006880 | S.CER C1608 JB 1H 472K-T | B | 37.4/74 |
| C201 | 4030011340 | S.CER C1608 CH 1H 471J-T | T | 33.8/40.4 |
| C202 | 4510009280 | S.ELE EEE1EA4R7SR | T | 26.5/44 |
| C203 | 4030006900 | S.CER C1608 JB 1H 103K-T | T | 32.5/38.3 |
| C204 | 4030006880 | S.CER C1608 JB 1H 472K-T | T | 25.4/35.3 |
| C205 | 4030006880 | S.CER C1608 JB 1H 472K-T | T | 25.4/34 |
| C206 | 4030006880 | S.CER C1608 JB 1H 472K-T | T | 31.1/43 |
| C207 | 4030007030 | S.CER C1608 CH 1H 150J-T | B | 46.8/32.4 |
| C208 | 4030007030 | S.CER C1608 CH 1H 150J-T | T | 32.5/41 |
| C209 | 4030011340 | S.CER C1608 CH 1H 471J-T | T | 44.1/26.1 |
| C210 | 4550007620 | S.TAN F931V224MAABMA | T | 46.2/26.7 |
| C211 | 4550007300 | S.TAN F931A335MAABMA | B | 46.1/41.6 |
| C219 | 4030006880 | S.CER C1608 JB 1H 472K-T | T | 33.8/37.8 |
| C220 | 4030007130 | S.CER C1608 CH 1H 101J-T | T | 54.7/37.6 |
| C221 | 4030009520 | S.CER C1608 CH 1H 020B-T | T | 54.7/32 |
| C222 | 4610001860 | S.TRI TZB4Z060AB10R00 | T | 68.1/32.6 |
| C223 | 4030007080 | S.CER C1608 CH 1H 390J-T | T | 73.2/36.3 |
| C224 | 4030007010 | S.CER C1608 CH 1H 100D-T | T | 73.2/38.9 |
| C225 | 4030007050 | S.CER C1608 CH 1H 220J-T | T | 73.6/30.9 |
| C226 | 4030006880 | S.CER C1608 JB 1H 472K-T | T | 71/30.9 |
| C227 | 4030009920 | S.CER C1608 CH 1H 050B-T | T | 75.1/32.6 |
| C228 | 4510008540 | S.ELE EEE1CA100SR | T | 68.8/37.8 |
| C229 | 4030009530 | S.CER C1608 CH 1H 030B-T | T | 77.8/32.6 |
| C230 | 4030007100 | S.CER C1608 CH 1H 560J-T | T | 54.7/50 |
| C231 | 4030009510 | S.CER C1608 CH 1H 010B-T | T | 54.7/44.6 |
| C232 | 4610001860 | S.TRI TZB4Z060AB10R00 | T | 68.1/45.1 |
| C233 | 4030007070 | S.CER C1608 CH 1H 330J-T | T | 73.2/48.8 |
| C234 | 4030009920 | S.CER C1608 CH 1H 050B-T | T | 73.2/51.4 |
| C235 | 4030007020 | S.CER C1608 CH 1H 120J-T | T | 73.6/43.3 |
| C236 | 4030006880 | S.CER C1608 JB 1H 472K-T | T | 71/43.3 |
| C237 | 4030009910 | S.CER C1608 CH 1H 040B-T | T | 75.1/45 |
| C238 | 4510008540 | S.ELE EEE1CA100SR | T | 68.8/50.3 |
| C239 | 4030009910 | S.CER C1608 CH 1H 040B-T | T | 77.8/45 |
| C240 | 4030007080 | S.CER C1608 CH 1H 390J-T | T | 54.7/62.5 |
| C241 | 4030009510 | S.CER C1608 CH 1H 010B-T | T | 54.7/57.1 |
| C242 | 4610001860 | S.TRI TZB4Z060AB10R00 | T | 68.1/57.6 |
| C243 | 4030007060 | S.CER C1608 CH 1H 270J-T | T | 73.2/61.3 |
| C244 | 4030009910 | S.CER C1608 CH 1H 040B-T | T | 73.2/63.9 |
| C245 | 4030009920 | S.CER C1608 CH 1H 050B-T | T | 73.6/55.8 |
| C246 | 4030006880 | S.CER C1608 JB 1H 472K-T | T | 71/55.9 |
| C247 | 4030009530 | S.CER C1608 CH 1H 030B-T | T | 75.1/57.5 |
| C248 | 4510008540 | S.ELE EEE1CA100SR | T | 68.8/62.9 |
| C250 | 4030007100 | S.CER C1608 CH 1H 560J-T | T | 54.7/75 |
| C251 | 4030009540 | S.CER C1608 CH 1H 1R5B-T | T | 54.7/69.6 |
| C252 | 4610001810 | S.TRI TZB4Z030AB10R00 | T | 68.1/70.1 |
| C253 | 4030007080 | S.CER C1608 CH 1H 390J-T | T | 73.2/73.8 |
| C254 | 4030009530 | S.CER C1608 CH 1H 030B-T | T | 73.2/76.4 |
| C255 | 4030006990 | S.CER C1608 CH 1H 080D-T | T | 73.6/68.4 |
| C256 | 4030006880 | S.CER C1608 JB 1H 472K-T | T | 71/68.4 |
| C257 | 4030007010 | S.CER C1608 CH 1H 100D-T | T | 75.1/70 |
| C258 | 4510008540 | S.ELE EEE1CA100SR | T | 68.8/75.4 |
| C260 | 4030007110 | S.CER C1608 CH 1H 680J-T | T | 54.7/87.5 |
| C262 | 4610001810 | S.TRI TZB4Z030AB10R00 | T | 68.1/82.6 |
| C263 | 4030007080 | S.CER C1608 CH 1H 390J-T | T | 73.2/86.3 |
| C264 | 4030009530 | S.CER C1608 CH 1H 030B-T | T | 73.2/88.9 |
| C265 | 4030011770 | S.CER C1608 CH 1H 060B-T | T | 73.6/80.9 |
| C266 | 4030006880 | S.CER C1608 JB 1H 472K-T | T | 71/80.9 |
| C267 | 4030007010 | S.CER C1608 CH 1H 100D-T | T | 75.1/82.5 |
| C268 | 4510008540 | S.ELE EEE1CA100SR | T | 68.8/87.9 |
| C272 | 4610001860 | S.TRI TZB4Z060AB10R00 | T | 68.1/95.1 |
| C273 | 4030007050 | S.CER C1608 CH 1H 220J-T | T | 73.2/98.2 |
| C274 | 4030009530 | S.CER C1608 CH 1H 030B-T | T | 73.2/100.8 |
| C275 | 4030009920 | S.CER C1608 CH 1H 050B-T | T | 73.6/92.8 |
| C276 | 4030006880 | S.CER C1608 JB 1H 472K-T | T | 71/92.8 |
| C277 | 4030007010 | S.CER C1608 CH 1H 100D-T | T | 75.1/95 |
| C278 | 4510008540 | S.ELE EEE1CA100SR | T | 68.8/100.4 |
| C283 | 4030017810 | S.CER C1608 CH 1H 102J-T | T | 82.1/36.3 |
| C284 | 4030006880 | S.CER C1608 JB 1H 472K-T | T | 84.5/34.3 |
| C285 | 4030017810 | S.CER C1608 CH 1H 102J-T | T | 82.1/48.8 |
| C286 | 4030006880 | S.CER C1608 JB 1H 472K-T | T | 84.5/46.9 |
| C287 | 4030017810 | S.CER C1608 CH 1H 102J-T | T | 82.1/61.3 |
| C288 | 4030006880 | S.CER C1608 JB 1H 472K-T | T | 83.9/57.5 |
| C289 | 4030017810 | S.CER C1608 CH 1H 102J-T | T | 82.1/73.8 |
| C290 | 4030006880 | S.CER C1608 JB 1H 472K-T | T | 84.3/70.4 |
| C291 | 4030017810 | S.CER C1608 CH 1H 102J-T | T | 82.1/86.3 |
| C292 | 4030006880 | S.CER C1608 JB 1H 472K-T | T | 84.4/84.4 |
| C293 | 4030017810 | S.CER C1608 CH 1H 102J-T | T | 82.1/98.7 |

M.=Mounted side (T: Mounted on the Top side, B: Mounted on the Bottom side)
S.=Surface mount

## [RXPLL-B UNIT]

| REF NO. | ORDER NO. | DESCRIPTION | M. | H/V LOCATION |
|---|---|---|---|---|
| C294 | 4030006880 | S.CER C1608 JB 1H 472K-T | T | 83.2/93.9 |
| C297 | 4030009920 | S.CER C1608 CH 1H 050B-T | T | 52.6/59.4 |
| C299 | 4030007050 | S.CER C1608 CH 1H 220J-T | T | 52.6/84.4 |
| C301 | 4030006880 | S.CER C1608 JB 1H 472K-T | T | 89.3/30.6 |
| C302 | 4030006880 | S.CER C1608 JB 1H 472K-T | T | 94.9/28 |
| C303 | 4030006880 | S.CER C1608 JB 1H 472K-T | B | 92.6/39.8 |
| C304 | 4030006880 | S.CER C1608 JB 1H 472K-T | B | 92.6/45.2 |
| C305 | 4030006880 | S.CER C1608 JB 1H 472K-T | B | 89.1/48.8 |
| C306 | 4030006880 | S.CER C1608 JB 1H 472K-T | B | 89.1/50.6 |
| C309 | 4030017810 | S.CER C1608 CH 1H 102J-T | T | 94.9/42.7 |
| C310 | 4030011600 | S.CER C1608 JB 1E 104K-T | T | 92.8/42.1 |
| C311 | 4510008520 | S.ELE EEE1CA470SP | T | 93.4/47.4 |
| C312 | 4030006880 | S.CER C1608 JB 1H 472K-T | B | 89/27.4 |
| C313 | 4030006880 | S.CER C1608 JB 1H 472K-T | B | 93.7/23.1 |
| C331 | 4030007110 | S.CER C1608 CH 1H 680J-T | T | 89.3/32.2 |
| C332 | 4030007160 | S.CER C1608 CH 1H 181J-T | T | 92.1/33.5 |
| C333 | 4030007110 | S.CER C1608 CH 1H 680J-T | T | 89.3/33.5 |
| C334 | 4030007050 | S.CER C1608 CH 1H 220J-T | T | 94.9/36 |
| C335 | 4030006980 | S.CER C1608 CH 1H 070D-T | T | 94.9/37.4 |
| C336 | 4030007030 | S.CER C1608 CH 1H 150J-T | T | 92.1/38.8 |
| C337 | 4030007050 | S.CER C1608 CH 1H 220J-T | T | 94.9/38.8 |
| C341 | 4030006880 | S.CER C1608 JB 1H 472K-T | T | 94.9/40.1 |
| C342 | 4030006880 | S.CER C1608 JB 1H 472K-T | T | 86.5/33.5 |
| C344 | 4030011600 | S.CER C1608 JB 1E 104K-T | T | 94.9/41.4 |
| C351 | 4030017810 | S.CER C1608 CH 1H 102J-T | T | 94.9/61.6 |
| C352 | 4030011600 | S.CER C1608 JB 1E 104K-T | T | 94.9/62.9 |
| C353 | 4510008520 | S.ELE EEE1CA470SP | T | 93.4/67.1 |
| C354 | 4030006880 | S.CER C1608 JB 1H 472K-T | T | 89.3/51.7 |
| C355 | 4030006880 | S.CER C1608 JB 1H 472K-T | T | 94.9/55.1 |
| C356 | 4030006880 | S.CER C1608 JB 1H 472K-T | T | 89.2/58.4 |
| C357 | 4030006880 | S.CER C1608 JB 1H 472K-T | T | 94.9/57.7 |
| C358 | 4030006880 | S.CER C1608 JB 1H 472K-T | B | 89.2/60.3 |
| C359 | 4030006880 | S.CER C1608 JB 1H 472K-T | B | 92.6/62.1 |
| C360 | 4030006880 | S.CER C1608 JB 1H 472K-T | B | 89.9/66.9 |
| C361 | 4030006880 | S.CER C1608 JB 1H 472K-T | T | 89.3/83.4 |
| C363 | 4030006880 | S.CER C1608 JB 1H 472K-T | T | 86.1/60.9 |
| C364 | 4030017810 | S.CER C1608 CH 1H 102J-T | T | 86.7/52.3 |
| C365 | 4030006880 | S.CER C1608 JB 1H 472K-T | T | 90.3/59.9 |
| C421 | 4030006880 | S.CER C1608 JB 1H 472K-T | T | 94.1/88.5 |
| C423 | 4030006880 | S.CER C1608 JB 1H 472K-T | T | 94.1/93.3 |
| C426 | 4030006880 | S.CER C1608 JB 1H 472K-T | B | 94.6/87.3 |
| C427 | 4030006880 | S.CER C1608 JB 1H 472K-T | T | 92.1/86.5 |
| C441 | 4030007040 | S.CER C1608 CH 1H 180J-T | T | 94.9/71.3 |
| C442 | 4030007040 | S.CER C1608 CH 1H 180J-T | T | 94.9/72.6 |
| C443 | 4030007020 | S.CER C1608 CH 1H 120J-T | T | 92.1/74.2 |
| C444 | 4030007080 | S.CER C1608 CH 1H 390J-T | T | 94.9/73.9 |
| C445 | 4030011770 | S.CER C1608 CH 1H 060B-T | T | 94.9/75.2 |
| C446 | 4030007060 | S.CER C1608 CH 1H 270J-T | T | 94.9/79.1 |
| C447 | 4030007110 | S.CER C1608 CH 1H 680J-T | T | 92.8/78.9 |
| C448 | 4030006880 | S.CER C1608 JB 1H 472K-T | T | 94.9/76.5 |
| C449 | 4030006880 | S.CER C1608 JB 1H 472K-T | T | 88.1/69.1 |
| C451 | 4030007110 | S.CER C1608 CH 1H 680J-T | T | 92/82.1 |
| C452 | 4030007160 | S.CER C1608 CH 1H 181J-T | T | 92/80.8 |
| C453 | 4030011600 | S.CER C1608 JB 1E 104K-T | T | 94.9/77.8 |
| C501 | 4030006880 | S.CER C1608 JB 1H 472K-T | T | 38.9/131.2 |
| C502 | 4030011600 | S.CER C1608 JB 1E 104K-T | T | 38.9/129.9 |
| C503 | 4510008540 | S.ELE EEE1CA100SR | T | 36.6/126.7 |
| C504 | 4030011600 | S.CER C1608 JB 1E 104K-T | T | 21.4/153.1 |
| C505 | 4550007470 | S.TAN F931A107MNMBMA | B | 19.2/140.3 |
| C506 | 4030011600 | S.CER C1608 JB 1E 104K-T | T | 21.4/141 |
| C507 | 4030011600 | S.CER C1608 JB 1E 104K-T | T | 21.4/137.1 |
| C509 | 4030011600 | S.CER C1608 JB 1E 104K-T | T | 25.8/132.6 |
| C510 | 4030011600 | S.CER C1608 JB 1E 104K-T | T | 28.4/132.6 |
| C511 | 4030011600 | S.CER C1608 JB 1E 104K-T | T | 32.2/132.6 |
| C512 | 4030011600 | S.CER C1608 JB 1E 104K-T | T | 34.8/132.6 |
| C513 | 4030011600 | S.CER C1608 JB 1E 104K-T | T | 37.4/132.6 |
| C514 | 4030011600 | S.CER C1608 JB 1E 104K-T | T | 41.2/136 |
| C515 | 4030011600 | S.CER C1608 JB 1E 104K-T | T | 41.3/139.7 |
| C516 | 4030011600 | S.CER C1608 JB 1E 104K-T | T | 41.3/142.3 |
| C517 | 4030011600 | S.CER C1608 JB 1E 104K-T | T | 37.6/151.8 |
| C518 | 4030011600 | S.CER C1608 JB 1E 104K-T | T | 34.8/151.8 |
| C519 | 4030011600 | S.CER C1608 JB 1E 104K-T | T | 31.2/151.8 |
| C520 | 4030011600 | S.CER C1608 JB 1E 104K-T | T | 23.3/151.9 |
| C521 | 4030011600 | S.CER C1608 JB 1E 104K-T | T | 41.6/134 |
| C522 | 4550007220 | S.TAN F931A476MCMBMA | B | 40.7/145 |
| C525 | 4030006880 | S.CER C1608 JB 1H 472K-T | T | 35.3/154.5 |
| C526 | 4030011600 | S.CER C1608 JB 1E 104K-T | T | 36.6/154.5 |
| C531 | 4030006880 | S.CER C1608 JB 1H 472K-T | T | 14.6/137.5 |
| C532 | 4030007070 | S.CER C1608 CH 1H 330J-T | T | 17.2/137.5 |
| C533 | 4030007110 | S.CER C1608 CH 1H 680J-T | T | 17.3/133.4 |
| C534 | 4030007110 | S.CER C1608 CH 1H 680J-T | T | 16.8/130.1 |
| C535 | 4030007070 | S.CER C1608 CH 1H 330J-T | T | 18.1/127 |
| C536 | 4030006880 | S.CER C1608 JB 1H 472K-T | T | 20.9/127.6 |
| C537 | 4030006880 | S.CER C1608 JB 1H 472K-T | T | 27.2/126.4 |
| C540 | 4030006880 | S.CER C1608 JB 1H 472K-T | B | 56.3/142.8 |
| C541 | 4510008540 | S.ELE EEE1CA100SR | T | 51/139.3 |
| C542 | 4340000260 | S.MLR ECPU1C104MA5 | B | 47.8/128.7 |
| C543 | 4030007060 | S.CER C1608 CH 1H 270J-T | T | 62.2/136.4 |
| C545 | 4030008560 | S.CER C1608 CH 1H 300J-T | T | 70/137.1 |
| C546 | 4610001830 | S.TRI TZB4S100AB10R00 | T | 65.8/138.7 |
| C547 | 4030007130 | S.CER C1608 CH 1H 101J-T | T | 71.3/137.1 |
| C548 | 4030007010 | S.CER C1608 CH 1H 100D-T | T | 71.3/139.9 |
| C549 | 4030007050 | S.CER C1608 CH 1H 220J-T | T | 68.9/145.1 |
| C550 | 4030006880 | S.CER C1608 JB 1H 472K-T | T | 66.3/143 |
| C551 | 4030009520 | S.CER C1608 CH 1H 020B-T | T | 71.3/142.8 |
| C552 | 4030017810 | S.CER C1608 CH 1H 102J-T | B | 54.6/139.5 |
| C553 | 4030006880 | S.CER C1608 JB 1H 472K-T | B | 56.3/139.5 |
| C554 | 4510008500 | S.ELE EEE1CA101WP | T | 50.9/146.6 |
| C555 | 4030006880 | S.CER C1608 JB 1H 472K-T | B | 47.7/149.5 |
| C556 | 4550007220 | S.TAN F931A476MCMBMA | B | 76.4/136.1 |
| C558 | 4550007520 | S.TAN F931A106MAABMA | B | 43.4/132.5 |
| C559 | 4550007400 | S.TAN F931A225MAABMA | B | 43.4/129.9 |
| C561 | 4550007520 | S.TAN F931A106MAABMA | T | 70/157.5 |
| C562 | 4030006880 | S.CER C1608 JB 1H 472K-T | T | 68.3/155.5 |

## [RXPLL-B UNIT]

| REF NO. | ORDER NO. | DESCRIPTION | M. | H/V LOCATION |
|---|---|---|---|---|
| C563 | 4030017810 | S.CER C1608 CH 1H 102J-T | B | 60.1/158 |
| C564 | 4030006880 | S.CER C1608 JB 1H 472K-T | B | 58.8/158 |
| C565 | 4510008520 | S.ELE EEE1CA470SP | T | 50.9/155.6 |
| C566 | 4030006880 | S.CER C1608 JB 1H 472K-T | T | 64.4/155.5 |
| C571 | 4030006880 | S.CER C1608 JB 1H 472K-T | B | 58.5/161.3 |
| C573 | 4030007040 | S.CER C1608 CH 1H 180J-T | B | 72.5/166.8 |
| C574 | 4030009510 | S.CER C1608 CH 1H 010B-T | T | 72.6/169.1 |
| C575 | 4030007040 | S.CER C1608 CH 1H 180J-T | T | 72.6/171.9 |
| C580 | 4030006880 | S.CER C1608 JB 1H 472K-T | T | 41.9/152.4 |
| C581 | 4030006880 | S.CER C1608 JB 1H 472K-T | T | 41.9/144.2 |
| C591 | 4030006880 | S.CER C1608 JB 1H 472K-T | T | 63.5/171.2 |
| C592 | 4030007060 | S.CER C1608 CH 1H 270J-T | T | 62.8/163.1 |
| C593 | 4510008540 | S.ELE EEE1CA100SR | T | 54.4/170.7 |
| C594 | 4030006880 | S.CER C1608 JB 1H 472K-T | T | 57.4/171.9 |
| C596 | 4030006880 | S.CER C1608 JB 1H 472K-T | B | 63.7/168.1 |
| C597 | 4030007050 | S.CER C1608 CH 1H 220J-T | T | 62.2/171.2 |
| C601 | 4030006880 | S.CER C1608 JB 1H 472K-T | T | 47.3/116.4 |
| C602 | 4030006880 | S.CER C1608 JB 1H 472K-T | T | 49.5/121.4 |
| C607 | 4030006880 | S.CER C1608 JB 1H 472K-T | T | 51.2/115.4 |
| C608 | 4030006880 | S.CER C1608 JB 1H 472K-T | T | 53.2/115.9 |
| C609 | 4030007100 | S.CER C1608 CH 1H 560J-T | T | 53.2/114.6 |
| C610 | 4030008750 | S.CER C1608 CH 1H 360J-T | T | 55.2/115.4 |
| C611 | 4030007140 | S.CER C1608 CH 1H 121J-T | T | 56.3/113.5 |
| C612 | 4030007020 | S.CER C1608 CH 1H 120J-T | T | 57.1/114.8 |
| C613 | 4030007110 | S.CER C1608 CH 1H 680J-T | T | 56.3/112.2 |
| C651 | 4030006880 | S.CER C1608 JB 1H 472K-T | T | 13.5/174 |
| C652 | 4030011600 | S.CER C1608 JB 1E 104K-T | T | 12.9/176.3 |
| C653 | 4510008540 | S.ELE EEE1CA100SR | T | 6.8/172.6 |
| C654 | 4030011600 | S.CER C1608 JB 1E 104K-T | T | 22.8/161.4 |
| C655 | 4030011600 | S.CER C1608 JB 1E 104K-T | T | 25.9/161.4 |
| C656 | 4030011600 | S.CER C1608 JB 1E 104K-T | T | 25.8/177.1 |
| C657 | 4030011600 | S.CER C1608 JB 1E 104K-T | T | 22.7/177.1 |
| C658 | 4030011600 | S.CER C1608 JB 1E 104K-T | T | 13.5/172.7 |
| C659 | 4030011600 | S.CER C1608 JB 1E 104K-T | T | 16.5/163.4 |
| C660 | 4030006880 | S.CER C1608 JB 1H 472K-T | T | 17.6/161.4 |
| C661 | 4030011600 | S.CER C1608 JB 1E 104K-T | T | 13.5/166.9 |
| C662 | 4550007220 | S.TAN F931A476MCMBMA | B | 30.5/169.4 |
| C680 | 4030006880 | S.CER C1608 JB 1H 472K-T | T | 34.3/177.1 |
| C681 | 4030007160 | S.CER C1608 CH 1H 181J-T | T | 40.3/177.1 |
| C682 | 4030007140 | S.CER C1608 CH 1H 121J-T | T | 39.6/175.2 |
| C683 | 4030011330 | S.CER C1608 CH 1H 391J-T | T | 40.9/175.2 |
| C684 | 4030007080 | S.CER C1608 CH 1H 390J-T | B | 39.3/174 |
| C685 | 4030011280 | S.CER C1608 CH 1H 271J-T | B | 42.3/172.6 |
| C686 | 4030010760 | S.CER C1608 CH 1H 331J-T | B | 39.3/170.6 |
| C687 | 4030018580 | S.CER C1608 CH 1H 821J-T | T | 41/169.7 |
| C688 | 4030010760 | S.CER C1608 CH 1H 331J-T | B | 37.5/169.7 |
| C689 | 4030011600 | S.CER C1608 JB 1E 104K-T | T | 37.4/166.4 |
| C690 | 4030011600 | S.CER C1608 JB 1E 104K-T | T | 37.4/161.3 |
| C691 | 4030011600 | S.CER C1608 JB 1E 104K-T | T | 46.4/164 |
| C692 | 4030006880 | S.CER C1608 JB 1H 472K-T | T | 40.3/162.1 |
| C693 | 4030006880 | S.CER C1608 JB 1H 472K-T | B | 58.4/169.6 |
| C694 | 4030006880 | S.CER C1608 JB 1H 472K-T | B | 58.4/164.2 |
| C703 | 4030017810 | S.CER C1608 CH 1H 102J-T | T | 24.3/116.6 |
| C704 | 4030006880 | S.CER C1608 JB 1H 472K-T | T | 23/116.6 |
| C705 | 4510008500 | S.ELE EEE1CA101WP | T | 29.4/118.7 |
| C707 | 4030011600 | S.CER C1608 JB 1E 104K-T | T | 32.1/113.7 |
| C708 | 4030011600 | S.CER C1608 JB 1E 104K-T | T | 32.1/108.1 |
| C709 | 4030007070 | S.CER C1608 CH 1H 330J-T | T | 38.8/112.9 |
| C710 | 4030006880 | S.CER C1608 JB 1H 472K-T | T | 36.2/112.9 |
| C711 | 4030009540 | S.CER C1608 CH 1H 1R5B-T | B | 39.3/113.6 |
| C712 | 4030007070 | S.CER C1608 CH 1H 330J-T | T | 36.2/114.2 |
| C713 | 4030006880 | S.CER C1608 JB 1H 472K-T | T | 42/118.8 |
| C1000 | 4030007050 | S.CER C1608 CH 1H 220J-T | B | 177.1/13.8 |
| C1002 | 4030006880 | S.CER C1608 JB 1H 472K-T | B | 153.1/16.2 |
| C1003 | 4030012600 | S.CER C2012 JB 1A 105M-T | T | 157.4/8.2 |
| C1004 | 4030011600 | S.CER C1608 JB 1E 104K-T | B | 169.6/8.7 |
| C1005 | 4030011600 | S.CER C1608 JB 1E 104K-T | T | 162.8/17.2 |
| C1006 | 4030010210 | S.CER C3216 JB 1C 105M-T | T | 173.8/18.6 |
| C1007 | 4030006880 | S.CER C1608 JB 1H 472K-T | T | 172.4/23.9 |
| C1008 | 4030006880 | S.CER C1608 JB 1H 472K-T | T | 160/24 |
| C1009 | 4030006880 | S.CER C1608 JB 1H 472K-T | T | 147.6/23.8 |
| C1010 | 4030012600 | S.CER C2012 JB 1A 105M-T | T | 154.5/28.9 |
| C1011 | 4030012600 | S.CER C2012 JB 1A 105M-T | T | 144.2/29.3 |
| C1012 | 4030010210 | S.CER C3216 JB 1C 105M-T | T | 144.8/40.2 |
| C1013 | 4030012600 | S.CER C2012 JB 1A 105M-T | T | 144.2/33.2 |
| C1014 | 4030018810 | S.CER C3216 CH 1H 333J-T | B | 151.6/48.3 |
| C1015 | 4030012600 | S.CER C2012 JB 1A 105M-T | T | 163.6/13.8 |
| C1016 | 4030012600 | S.CER C2012 JB 1A 105M-T | T | 173.6/33.2 |
| C1017 | 4030012600 | S.CER C2012 JB 1A 105M-T | T | 163.3/33.2 |
| C1020 | 4030012600 | S.CER C2012 JB 1A 105M-T | B | 170/38.6 |
| C1021 | 4030012600 | S.CER C2012 JB 1A 105M-T | B | 154/38.6 |
| C1024 | 4030010210 | S.CER C3216 JB 1C 105M-T | B | 170.5/45.5 |
| C1025 | 4030010210 | S.CER C3216 JB 1C 105M-T | B | 154.7/45.5 |
| C1026 | 4030010210 | S.CER C3216 JB 1C 105M-T | T | 171.4/52.7 |
| C1027 | 4030010210 | S.CER C3216 JB 1C 105M-T | T | 165.6/52.7 |
| C1028 | 4030006880 | S.CER C1608 JB 1H 472K-T | B | 156.4/65.4 |
| C1029 | 4030006880 | S.CER C1608 JB 1H 472K-T | T | 168.5/65.4 |
| C1030 | 4030010210 | S.CER C3216 JB 1C 105M-T | T | 164.5/18 |
| C1031 | 4030012600 | S.CER C2012 JB 1A 105M-T | B | 169.2/10.8 |
| C1033 | 4550006470 | S.TAN TEESVB2 1D 106M8R | B | 146.5/47.7 |
| C1034 | 4550006470 | S.TAN TEESVB2 1D 106M8R | B | 174/52.1 |
| C1035 | 4550006470 | S.TAN TEESVB2 1D 106M8R | B | 164.6/15.8 |
| C1036 | 4030007120 | S.CER C1608 CH 1H 820J-T | T | 160.2/12.7 |
| C1037 | 4030007090 | S.CER C1608 CH 1H 470J-T | B | 149.3/49.3 |
| C1038 | 4030017810 | S.CER C1608 CH 1H 102J-T | T | 146.6/26.2 |
| C1039 | 4030017810 | S.CER C1608 CH 1H 102J-T | T | 146.5/41 |
| C1040 | 4030017810 | S.CER C1608 CH 1H 102J-T | T | 145.3/36.4 |
| C1041 | 4030006990 | S.CER C1608 CH 1H 080D-T | B | 153.4/31 |
| C1046 | 4030007010 | S.CER C1608 CH 1H 100D-T | B | 168.4/53.7 |
| C1048 | 4030006880 | S.CER C1608 JB 1H 472K-T | B | 170.6/41.6 |
| C1049 | 4030006880 | S.CER C1608 JB 1H 472K-T | B | 154.6/41.6 |
| C1050 | 4030017810 | S.CER C1608 CH 1H 102J-T | B | 170.5/49.5 |
| C1051 | 4030017810 | S.CER C1608 CH 1H 102J-T | B | 154.7/49.4 |
| C1052 | 4030007060 | S.CER C1608 CH 1H 270J-T | B | 164.1/29.6 |

M.=Mounted side (T: Mounted on the Top side, B: Mounted on the Bottom side)
S.=Surface mount

## [RXPLL-B UNIT]

| REF NO. | ORDER NO. | DESCRIPTION | M. | H/V LOCATION |
|---|---|---|---|---|
| C1053 | 4030007110 | S.CER C1608 CH 1H 680J-T | T | 175.2/77.3 |
| C1054 | 4030007010 | S.CER C1608 CH 1H 100D-T | B | 175.7/72.4 |
| C1055 | 4030007140 | S.CER C1608 CH 1H 121J-T | B | 175.7/74.2 |
| C1056 | 4030007050 | S.CER C1608 CH 1H 220J-T | T | 175.2/76 |
| C1057 | 4030007130 | S.CER C1608 CH 1H 101J-T | T | 172.1/77.1 |
| C1058 | 4030009920 | S.CER C1608 CH 1H 050B-T | B | 173.2/12.7 |
| C1060 | 4030017810 | S.CER C1608 CH 1H 102J-T | T | 178.6/94.4 |
| C1061 | 4030007090 | S.CER C1608 CH 1H 470J-T | B | 147.7/91.8 |
| C1062 | 4030007170 | S.CER C1608 CH 1H 221J-T | B | 149.5/91.8 |
| C1064 | 4030007090 | S.CER C1608 CH 1H 470J-T | T | 148.7/80.1 |
| C1066 | 4030007010 | S.CER C1608 CH 1H 100D-T | T | 138.6/81.9 |
| C1067 | 4030007010 | S.CER C1608 CH 1H 100D-T | T | 173.4/77.1 |
| C1070 | 4030006980 | S.CER C1608 CH 1H 070D-T | T | 137.2/81.9 |
| C1071 | 4030007100 | S.CER C1608 CH 1H 560J-T | B | 162.2/75.3 |
| C1072 | 4030007170 | S.CER C1608 CH 1H 221J-T | B | 162/78.7 |
| C1073 | 4030007080 | S.CER C1608 CH 1H 390J-T | B | 164.1/76.4 |
| C1074 | 4030007060 | S.CER C1608 CH 1H 270J-T | T | 148.7/78.6 |
| C1081 | 4030006900 | S.CER C1608 JB 1H 103K-T | B | 156.1/86 |
| C1082 | 4030006900 | S.CER C1608 JB 1H 103K-T | B | 151.3/91.8 |
| C1083 | 4030006900 | S.CER C1608 JB 1H 103K-T | B | 151.2/81.6 |
| C1084 | 4030006880 | S.CER C1608 JB 1H 472K-T | B | 149.4/81.6 |
| C1085 | 4030006880 | S.CER C1608 JB 1H 472K-T | B | 153/81.6 |
| C1091 | 4030006880 | S.CER C1608 JB 1H 472K-T | T | 149.3/149.4 |
| C1092 | 4030006880 | S.CER C1608 JB 1H 472K-T | T | 147/138.5 |
| C1093 | 4030006880 | S.CER C1608 JB 1H 472K-T | T | 161.3/135.8 |
| C1101 | 4030006900 | S.CER C1608 JB 1H 103K-T | T | 177/90.9 |
| C1102 | 4030006900 | S.CER C1608 JB 1H 103K-T | T | 175.4/115.5 |
| C1103 | 4030011600 | S.CER C1608 JB 1E 104K-T | T | 179.6/116.4 |
| C1104 | 4030011600 | S.CER C1608 JB 1E 104K-T | T | 175.4/87.7 |
| C1106 | 4030011600 | S.CER C1608 JB 1E 104K-T | T | 179.3/128.8 |
| C1107 | 4030011600 | S.CER C1608 JB 1E 104K-T | B | 172.3/124.2 |
| C1109 | 4030007090 | S.CER C1608 CH 1H 470J-T | T | 175.7/137.9 |
| C1110 | 4030006900 | S.CER C1608 JB 1H 103K-T | T | 175.7/136.6 |
| C1111 | 4030011600 | S.CER C1608 JB 1E 104K-T | T | 176.7/132 |
| C1112 | 4030006900 | S.CER C1608 JB 1H 103K-T | T | 179.3/132 |
| C1113 | 4030007090 | S.CER C1608 CH 1H 470J-T | T | 178.6/140.9 |
| C1114 | 4030006900 | S.CER C1608 JB 1H 103K-T | B | 178.4/138 |
| C1115 | 4030011600 | S.CER C1608 JB 1E 104K-T | T | 175.7/140 |
| C1116 | 4030006900 | S.CER C1608 JB 1H 103K-T | T | 165.7/138.7 |
| C1117 | 4030007010 | S.CER C1608 CH 1H 100D-T | T | 169.7/142.2 |
| C1118 | 4030011600 | S.CER C1608 JB 1E 104K-T | T | 171/142.2 |
| C1119 | 4030006880 | S.CER C1608 JB 1H 472K-T | T | 171.9/146.6 |
| C1120 | 4030006880 | S.CER C1608 JB 1H 472K-T | T | 171.9/148.4 |
| C1121 | 4030011600 | S.CER C1608 JB 1E 104K-T | T | 180.6/147.7 |
| C1122 | 4030009530 | S.CER C1608 CH 1H 030B-T | T | 178.2/120.3 |
| C1123 | 4030006900 | S.CER C1608 JB 1H 103K-T | T | 182.1/100.9 |
| C1124 | 4030006900 | S.CER C1608 JB 1H 103K-T | T | 175.3/105.9 |
| C1125 | 4030006900 | S.CER C1608 JB 1H 103K-T | T | 175.5/85.1 |
| C1126 | 4030011600 | S.CER C1608 JB 1E 104K-T | T | 173.4/131.1 |
| C1151 | 4030007110 | S.CER C1608 CH 1H 680J-T | B | 123.1/64 |
| C1152 | 4030007110 | S.CER C1608 CH 1H 680J-T | B | 123.1/57 |
| C1153 | 4030017810 | S.CER C1608 CH 1H 102J-T | T | 131.5/63.9 |
| C1201 | 4030007110 | S.CER C1608 CH 1H 680J-T | B | 120.2/21.8 |
| C1202 | 4030007110 | S.CER C1608 CH 1H 680J-T | B | 118.4/21.8 |
| C1207 | 4030006880 | S.CER C1608 JB 1H 472K-T | B | 123/11.8 |
| C1226 | 4030009500 | S.CER C1608 CH 1H 0R5B-T | B | 124.9/35.6 |
| C1227 | 4030009500 | S.CER C1608 CH 1H 0R5B-T | B | 115.4/35.6 |
| C1228 | 4030009920 | S.CER C1608 CH 1H 050B-T | B | 113.9/41.8 |
| C1231 | 4030006900 | S.CER C1608 JB 1H 103K-T | T | 118.9/21.5 |
| C1232 | 4030006900 | S.CER C1608 JB 1H 103K-T | T | 109/21.5 |
| C1234 | 4030006900 | S.CER C1608 JB 1H 103K-T | B | 123.5/38.3 |
| C1235 | 4030006880 | S.CER C1608 JB 1H 472K-T | B | 116.6/32.1 |
| C1236 | 4030006900 | S.CER C1608 JB 1H 103K-T | T | 119.8/40 |
| C1238 | 4030006900 | S.CER C1608 JB 1H 103K-T | B | 114/38.3 |
| C1239 | 4030006880 | S.CER C1608 JB 1H 472K-T | B | 106.8/32.3 |
| C1240 | 4030006900 | S.CER C1608 JB 1H 103K-T | T | 111.7/40.5 |
| C1241 | 4030006900 | S.CER C1608 JB 1H 103K-T | T | 113.6/38.6 |
| C1243 | 4030006880 | S.CER C1608 JB 1H 472K-T | B | 129.6/46.7 |
| C1244 | 4030007080 | S.CER C1608 CH 1H 390J-T | T | 149.6/67 |
| C1245 | 4030007130 | S.CER C1608 CH 1H 101J-T | T | 151/64.4 |
| C1246 | 4030007120 | S.CER C1608 CH 1H 820J-T | T | 150.9/67 |
| C1247 | 4030007090 | S.CER C1608 CH 1H 470J-T | T | 153.4/63.5 |
| C1248 | 4030007130 | S.CER C1608 CH 1H 101J-T | T | 153.4/66.8 |
| C1249 | 4030007020 | S.CER C1608 CH 1H 120J-T | T | 153.1/70.3 |
| C1250 | 4030007100 | S.CER C1608 CH 1H 560J-T | B | 152.4/74.3 |
| C1251 | 4030006900 | S.CER C1608 JB 1H 103K-T | T | 160.2/92.9 |
| C1252 | 4030006900 | S.CER C1608 JB 1H 103K-T | T | 152.7/92.9 |
| C1253 | 4030006900 | S.CER C1608 JB 1H 103K-T | B | 152.5/111.2 |
| C1255 | 4030017810 | S.CER C1608 CH 1H 102J-T | B | 155.7/99.3 |
| C1256 | 4030007010 | S.CER C1608 CH 1H 100D-T | T | 156.3/98.8 |
| C1257 | 4030011600 | S.CER C1608 JB 1E 104K-T | B | 155.7/103 |
| C1258 | 4030007080 | S.CER C1608 CH 1H 390J-T | B | 152/97.5 |
| C1264 | 4030007110 | S.CER C1608 CH 1H 680J-T | T | 122/51.1 |
| C1265 | 4610001830 | S.TRI TZB4S100AB10R00 | T | 163.8/70.8 |
| C1266 | 4030007020 | S.CER C1608 CH 1H 120J-T | T | 160.1/74.5 |
| C1267 | 4030006880 | S.CER C1608 JB 1H 472K-T | B | 157/126.4 |
| C1268 | 4030006980 | S.CER C1608 CH 1H 070D-T | T | 149.6/64.4 |
| C1302 | 4030007060 | S.CER C1608 CH 1H 270J-T | T | 159.3/111 |
| C1303 | 4030006980 | S.CER C1608 CH 1H 070D-T | T | 159.3/112.9 |
| C1304 | 4030007070 | S.CER C1608 CH 1H 330J-T | T | 159.3/114.2 |
| C1305 | 4030007010 | S.CER C1608 CH 1H 100D-T | T | 153.5/114.6 |
| C1306 | 4030009650 | S.CER C1608 CH 1H 240J-T | T | 159.3/115.5 |
| C1307 | 4030007030 | S.CER C1608 CH 1H 150J-T | T | 153.5/120.2 |
| C1308 | 4030006900 | S.CER C1608 JB 1H 103K-T | T | 155.1/127.1 |
| C1309 | 4030007080 | S.CER C1608 CH 1H 390J-T | T | 156.5/125.8 |
| C1310 | 4030007080 | S.CER C1608 CH 1H 390J-T | T | 159.1/128.4 |
| C1311 | 4030006900 | S.CER C1608 JB 1H 103K-T | B | 149/118.9 |
| C1312 | 4030007060 | S.CER C1608 CH 1H 270J-T | T | 155.5/111.7 |
| C1313 | 4030007060 | S.CER C1608 CH 1H 270J-T | T | 159.1/127.1 |
| C1355 | 4030006880 | S.CER C1608 JB 1H 472K-T | T | 144.7/70 |
| C1357 | 4030007000 | S.CER C1608 CH 1H 090D-T | B | 144.6/67.1 |
| C1358 | 4030011600 | S.CER C1608 JB 1E 104K-T | B | 139.1/70.4 |
| C1360 | 4030011600 | S.CER C1608 JB 1E 104K-T | B | 146.4/70.4 |
| C1361 | 4030007020 | S.CER C1608 CH 1H 120J-T | B | 137.7/69.5 |

## [RXPLL-B UNIT]

| REF NO. | ORDER NO. | DESCRIPTION | M. | H/V LOCATION |
|---|---|---|---|---|
| C1362 | 4030011600 | S.CER C1608 JB 1E 104K-T | T | 137.5/65.6 |
| C1403 | 4030017810 | S.CER C1608 CH 1H 102J-T | T | 114.7/70.3 |
| C1404 | 4030017810 | S.CER C1608 CH 1H 102J-T | T | 116.3/104.8 |
| C1405 | 4030006900 | S.CER C1608 JB 1H 103K-T | B | 115.9/63.9 |
| C1406 | 4030017810 | S.CER C1608 CH 1H 102J-T | T | 114.2/66.2 |
| C1407 | 4030017810 | S.CER C1608 CH 1H 102J-T | T | 119.9/70.3 |
| C1408 | 4030006900 | S.CER C1608 JB 1H 103K-T | T | 116.3/73 |
| C1409 | 4030006900 | S.CER C1608 JB 1H 103K-T | T | 114.4/68.1 |
| C1410 | 4030007030 | S.CER C1608 CH 1H 150J-T | T | 116.3/83.3 |
| C1411 | 4030006990 | S.CER C1608 CH 1H 080D-T | T | 112.2/87.8 |
| C1412 | 4030007030 | S.CER C1608 CH 1H 150J-T | T | 116.3/93.7 |
| C1413 | 4030007020 | S.CER C1608 CH 1H 120J-T | T | 107/83.3 |
| C1414 | 4030006990 | S.CER C1608 CH 1H 080D-T | T | 103.6/86.6 |
| C1415 | 4030007020 | S.CER C1608 CH 1H 120J-T | T | 107/93.7 |
| C1416 | 4030006900 | S.CER C1608 JB 1H 103K-T | T | 113.2/103.4 |
| C1417 | 4030006900 | S.CER C1608 JB 1H 103K-T | T | 110.5/107.6 |
| C1418 | 4030017810 | S.CER C1608 CH 1H 102J-T | T | 110.4/105.8 |
| C1419 | 4030017810 | S.CER C1608 CH 1H 102J-T | T | 111/108.9 |
| C1420 | 4030007120 | S.CER C1608 CH 1H 820J-T | B | 113.2/114.2 |
| C1421 | 4030007150 | S.CER C1608 CH 1H 151J-T | B | 115/114.2 |
| C1423 | 4030010750 | S.CER C1608 CH 1H 201J-T | B | 120.3/111.1 |
| C1424 | 4030007010 | S.CER C1608 CH 1H 100D-T | T | 132.8/103.3 |
| C1425 | 4030011600 | S.CER C1608 JB 1E 104K-T | T | 136.5/106.2 |
| C1426 | 4030011600 | S.CER C1608 JB 1E 104K-T | T | 137.8/106.2 |
| C1427 | 4030006900 | S.CER C1608 JB 1H 103K-T | T | 133.9/106.2 |
| C1428 | 4030006980 | S.CER C1608 CH 1H 070D-T | T | 119.5/109 |
| C1429 | 4030006900 | S.CER C1608 JB 1H 103K-T | T | 120.5/113.6 |
| C1430 | 4030007040 | S.CER C1608 CH 1H 180J-T | B | 131.9/115.3 |
| C1431 | 4030017810 | S.CER C1608 CH 1H 102J-T | T | 127/116.2 |
| C1432 | 4030009980 | S.CER C1608 JB 1H 152K-T | T | 129.1/114.1 |
| C1433 | 4030011600 | S.CER C1608 JB 1E 104K-T | T | 130.4/114.1 |
| C1434 | 4030009920 | S.CER C1608 CH 1H 050B-T | B | 124.7/134.4 |
| C1435 | 4030009920 | S.CER C1608 CH 1H 050B-T | B | 124.7/131.6 |
| C1436 | 4030011600 | S.CER C1608 JB 1E 104K-T | B | 137.2/122.2 |
| C1437 | 4030009920 | S.CER C1608 CH 1H 050B-T | T | 104/83.3 |
| C1438 | 4030009920 | S.CER C1608 CH 1H 050B-T | T | 102.3/86.6 |
| C1439 | 4030009920 | S.CER C1608 CH 1H 050B-T | T | 110/93.7 |
| C1441 | 4030006880 | S.CER C1608 JB 1H 472K-T | T | 120.5/116.2 |
| C1451 | 4030007020 | S.CER C1608 CH 1H 120J-T | T | 125.5/80.1 |
| C1453 | 4030007030 | S.CER C1608 CH 1H 150J-T | T | 122.1/85.1 |
| C1454 | 4030007030 | S.CER C1608 CH 1H 150J-T | T | 120.8/85.1 |
| C1456 | 4030007020 | S.CER C1608 CH 1H 120J-T | T | 125.5/90.9 |
| C1457 | 4030006900 | S.CER C1608 JB 1H 103K-T | T | 118.3/72.9 |
| C1458 | 4030006900 | S.CER C1608 JB 1H 103K-T | T | 116.6/103.5 |
| C1501 | 4030018530 | S.CER C3216 CH 1H 103J-T | T | 131.2/124.5 |
| C1502 | 4550003220 | S.TAN TEESVA 1E 105M8R | T | 132.1/139.2 |
| C1503 | 4030006900 | S.CER C1608 JB 1H 103K-T | T | 137/142.1 |
| C1504 | 4030012610 | S.CER C2012 JB 1C 474K-T | T | 136.7/140.5 |
| C1505 | 4030007010 | S.CER C1608 CH 1H 100D-T | T | 130/143.5 |
| C1506 | 4030010760 | S.CER C1608 CH 1H 331J-T | T | 131.3/146.3 |
| C1507 | 4510008540 | S.ELE EEE1CA100SR | T | 142.6/140.8 |
| C1508 | 4030011600 | S.CER C1608 JB 1E 104K-T | B | 128.8/148.8 |
| C1509 | 4030018800 | S.CER C3216 CH 1H 223J-T | T | 135.8/145.1 |
| C1510 | 4030007110 | S.CER C1608 CH 1H 680J-T | T | 136.5/158.9 |
| C1511 | 4510008540 | S.ELE EEE1CA100SR | T | 132.7/150.6 |
| C1512 | 4030011600 | S.CER C1608 JB 1E 104K-T | T | 129.6/149 |
| C1513 | 4030011600 | S.CER C1608 JB 1E 104K-T | T | 129.6/158.1 |
| C1514 | 4510008540 | S.ELE EEE1CA100SR | T | 132.7/156.5 |
| C1515 | 4030007160 | S.CER C1608 CH 1H 181J-T | T | 132.2/160.8 |
| C1516 | 4030009350 | S.CER C1608 CH 1H 3R5B-T | T | 130.9/160.8 |
| C1517 | 4030007110 | S.CER C1608 CH 1H 680J-T | T | 115.3/155 |
| C1518 | 4030018530 | S.CER C3216 CH 1H 103J-T | T | 131.2/132.8 |
| C1519 | 4550003220 | S.TAN TEESVA 1E 105M8R | T | 122.9/140.9 |
| C1520 | 4030006900 | S.CER C1608 JB 1H 103K-T | T | 119.8/140.7 |
| C1521 | 4030012610 | S.CER C2012 JB 1C 474K-T | T | 116.2/142.1 |
| C1522 | 4030007010 | S.CER C1608 CH 1H 100D-T | T | 123.7/143.5 |
| C1523 | 4030010760 | S.CER C1608 CH 1H 331J-T | T | 122.4/146.3 |
| C1524 | 4030018800 | S.CER C3216 CH 1H 223J-T | T | 117.9/145.2 |
| C1525 | 4510008540 | S.ELE EEE1CA100SR | T | 124.9/150.6 |
| C1526 | 4030011600 | S.CER C1608 JB 1E 104K-T | T | 128/149 |
| C1527 | 4030011600 | S.CER C1608 JB 1E 104K-T | T | 128/158.1 |
| C1528 | 4510008540 | S.ELE EEE1CA100SR | T | 124.9/156.5 |
| C1529 | 4030017870 | S.CER C1608 CH 1H 681J-T | T | 125.4/160.8 |
| C1530 | 4030011330 | S.CER C1608 CH 1H 391J-T | T | 126.7/160.8 |
| C1531 | 4510008500 | S.ELE EEE1CA101WP | T | 111.3/167.3 |
| C1532 | 4030011600 | S.CER C1608 JB 1E 104K-T | T | 107.1/167.3 |
| C1533 | 4030011600 | S.CER C1608 JB 1E 104K-T | T | 115.5/167.3 |
| C1534 | 4510008500 | S.ELE EEE1CA101WP | T | 119.7/167.3 |
| C1535 | 4030011600 | S.CER C1608 JB 1E 104K-T | T | 133.7/172.6 |
| C1536 | 4030017870 | S.CER C1608 CH 1H 681J-T | T | 126.2/179.5 |
| C1537 | 4510008500 | S.ELE EEE1CA101WP | T | 111.3/176 |
| C1538 | 4030011600 | S.CER C1608 JB 1E 104K-T | T | 107.1/176 |
| C1539 | 4030011600 | S.CER C1608 JB 1E 104K-T | T | 115.5/176 |
| C1540 | 4510008500 | S.ELE EEE1CA101WP | T | 119.7/176 |
| C1541 | 4030007050 | S.CER C1608 CH 1H 220J-T | T | 124/175 |
| C1651 | 4030006880 | S.CER C1608 JB 1H 472K-T | B | 105.5/144 |
| C1653 | 4030006880 | S.CER C1608 JB 1H 472K-T | B | 109/137.2 |
| C1654 | 4030017810 | S.CER C1608 CH 1H 102J-T | B | 106.9/137.2 |
| C1655 | 4030009530 | S.CER C1608 CH 1H 030B-T | T | 107.6/136.8 |
| C1656 | 4610001970 | S.TRI TZC3P200A110R00 | T | 110.9/136.2 |
| C1657 | 4030010220 | S.CER C2012 CH 1H 102J-T | T | 116.4/122.7 |
| C1658 | 4030010220 | S.CER C2012 CH 1H 102J-T | T | 116.4/130.9 |
| C1659 | 4030011600 | S.CER C1608 JB 1E 104K-T | T | 107.8/120 |
| C1660 | 4030011600 | S.CER C1608 JB 1E 104K-T | B | 134/174 |
| C1661 | 4030011600 | S.CER C1608 JB 1E 104K-T | B | 145.2/171.3 |
| C1662 | 4030011600 | S.CER C1608 JB 1E 104K-T | T | 144.3/178 |
| C1663 | 4030011600 | S.CER C1608 JB 1E 104K-T | T | 135.1/170.2 |
| C1665 | 4030006900 | S.CER C1608 JB 1H 103K-T | T | 138.9/164.1 |
| C1666 | 4030006880 | S.CER C1608 JB 1H 472K-T | B | 113.3/144 |
| C1701 | 4030011600 | S.CER C1608 JB 1E 104K-T | T | 153.4/163 |
| C1702 | 4030011600 | S.CER C1608 JB 1E 104K-T | T | 144.4/163 |
| C1703 | 4510004601 | ELE 16 ME 1000 HC | | |
| C1704 | 4030011600 | S.CER C1608 JB 1E 104K-T | B | 180.1/160.2 |
| C1705 | 4030011600 | S.CER C1608 JB 1E 104K-T | B | 186.4/160.2 |

M.=Mounted side (T: Mounted on the Top side, B: Mounted on the Bottom side)
S.=Surface mount

## [RXPLL-B UNIT]

| REF NO. | ORDER NO. | DESCRIPTION | | M. | H/V LOCATION |
|---|---|---|---|---|---|
| C1706 | 4510008520 | S.ELE | EEE1CA470SP | T | 172.7/154.8 |
| C1707 | 4030011600 | S.CER | C1608 JB 1E 104K-T | T | 149.7/154.8 |
| C1708 | 4030006880 | S.CER | C1608 JB 1H 472K-T | T | 175.7/166.8 |
| C1709 | 4030006880 | S.CER | C1608 JB 1H 472K-T | T | 172.6/166.8 |
| C1710 | 4030006880 | S.CER | C1608 JB 1H 472K-T | T | 169.6/166.8 |
| C1711 | 4030011340 | S.CER | C1608 CH 1H 471J-T | T | 171.4/163.5 |
| C1712 | 4030011340 | S.CER | C1608 CH 1H 471J-T | T | 167.5/163.5 |
| C1713 | 4030006880 | S.CER | C1608 JB 1H 472K-T | B | 165.5/168.8 |
| C1714 | 4030006880 | S.CER | C1608 JB 1H 472K-T | B | 153.8/141.8 |
| C1716 | 4030006880 | S.CER | C1608 JB 1H 472K-T | B | 154.7/145.1 |
| C1717 | 4030006880 | S.CER | C1608 JB 1H 472K-T | B | 152.9/145.1 |
| C1719 | 4030006880 | S.CER | C1608 JB 1H 472K-T | B | 151.1/145.1 |
| C1720 | 4030006880 | S.CER | C1608 JB 1H 472K-T | B | 155.6/141.8 |
| C1721 | 4030006880 | S.CER | C1608 JB 1H 472K-T | B | 157.4/141.8 |
| | | | | | |
| RL1001 | 6330001750 | RLY | FTR-B4CA012Z | | |
| RL1002 | 6330001750 | RLY | FTR-B4CA012Z | | |
| RL1003 | 6330001750 | RLY | FTR-B4CA012Z | | |
| RL1004 | 6330001750 | RLY | FTR-B4CA012Z | | |
| RL1005 | 6330001750 | RLY | FTR-B4CA012Z | | |
| RL1006 | 6330001750 | RLY | FTR-B4CA012Z | | |
| RL1203 | 6330001750 | RLY | FTR-B4CA012Z | | |
| RL1206 | 6330001750 | RLY | FTR-B4CA012Z | | |
| | | | | | |
| J2 | 6510019991 | S.CNR | 52808-2271 (2291) | T | 25/9 |
| J10 | 6510007020 | CNR | TMP-J01X-V6 | | |
| J351 | 6510007020 | CNR | TMP-J01X-V6 | | |
| J561 | 6510007020 | CNR | TMP-J01X-V6 | | |
| J601 | 6510007020 | CNR | TMP-J01X-V6 | | |
| J681 | 6510007020 | CNR | TMP-J01X-V6 | | |
| J831 | 6510007020 | CNR | TMP-J01X-V6 | | |
| J1002 | 6510007020 | CNR | TMP-J01X-V6 | | |
| J1101 | 6510007020 | CNR | TMP-J01X-V6 | | |
| J1201 | 6510007020 | CNR | TMP-J01X-V6 | | |
| J1301 | 6510007020 | CNR | TMP-J01X-V6 | | |
| J1501 | 6510018961 | S.CNR | B2B-PH-SM4-TB (LF) (SN) | T | 149.6/177.5 |
| J1701 | 6510019981 | S.CNR | 52808-1671 (1690) | T | 168/177.2 |
| | | | | | |
| W1052 | 9016201006 | WIR | 73/98/025/X98/X98 | | |
| W1401 | 9029495075 | JMP | 73/98/020/X98/X98 | | |
| W1411 | 7120000480 | S.JMP | MJP-0.4-T | T | 125.1/111.6 |
| | | | | | |
| EP20 | 6910012350 | S.BEA | MMZ1608Y 102BT | T | 85.4/126 |
| EP21 | 6910012350 | S.BEA | MMZ1608Y 102BT | T | 88.7/124 |
| EP22 | 6910012350 | S.BEA | MMZ1608Y 102BT | T | 90/124 |
| EP101 | 6910012350 | S.BEA | MMZ1608Y 102BT | B | 47.6/98.6 |
| EP102 | 6910012350 | S.BEA | MMZ1608Y 102BT | B | 47.6/96.8 |
| EP103 | 6910012350 | S.BEA | MMZ1608Y 102BT | T | 46/96.8 |
| EP104 | 6910012350 | S.BEA | MMZ1608Y 102BT | T | 46/92.9 |
| EP105 | 6910012350 | S.BEA | MMZ1608Y 102BT | T | 46/91.6 |
| EP106 | 6910012350 | S.BEA | MMZ1608Y 102BT | T | 46/89 |
| EP107 | 6910012350 | S.BEA | MMZ1608Y 102BT | B | 47.6/100.4 |
| EP1701 | 6910012350 | S.BEA | MMZ1608Y 102BT | T | 170.1/163.5 |
| EP1702 | 6910012350 | S.BEA | MMZ1608Y 102BT | T | 168.8/163.5 |
| EP1801 | 6910012350 | S.BEA | MMZ1608Y 102BT | B | 153/132.7 |
| EP1802 | 6910012350 | S.BEA | MMZ1608Y 102BT | B | 142.5/18.8 |
| EP1804 | 6910012350 | S.BEA | MMZ1608Y 102BT | B | 112.5/138.7 |
| EP1805 | 6910012350 | S.BEA | MMZ1608Y 102BT | B | 150.2/141.8 |
| EP1806 | 6910012350 | S.BEA | MMZ1608Y 102BT | B | 128.6/64.3 |
| EP1807 | 6910012350 | S.BEA | MMZ1608Y 102BT | B | 117.4/50.2 |
| EP1808 | 6910012350 | S.BEA | MMZ1608Y 102BT | B | 137/166.9 |
| EP1809 | 6910012350 | S.BEA | MMZ1608Y 102BT | B | 147.4/127.4 |
| EP1810 | 6910012350 | S.BEA | MMZ1608Y 102BT | B | 131.3/64.2 |
| EP1811 | 6910012350 | S.BEA | MMZ1608Y 102BT | T | 160.7/56.3 |
| EP1812 | 6910012350 | S.BEA | MMZ1608Y 102BT | B | 153.5/137.4 |
| EP1813 | 6910012350 | S.BEA | MMZ1608Y 102BT | B | 132.6/65.7 |
| EP1814 | 6910012350 | S.BEA | MMZ1608Y 102BT | B | 147.2/22.3 |
| EP1815 | 6910012350 | S.BEA | MMZ1608Y 102BT | B | 156/62.6 |
| EP1816 | 6910012350 | S.BEA | MMZ1608Y 102BT | B | 160.4/20.9 |
| EP1817 | 6910012350 | S.BEA | MMZ1608Y 102BT | B | 168.6/62.2 |
| EP1818 | 6910012350 | S.BEA | MMZ1608Y 102BT | B | 151.2/133.2 |
| EP1819 | 6910012350 | S.BEA | MMZ1608Y 102BT | B | 145.6/127.9 |
| EP1820 | 6910012350 | S.BEA | MMZ1608Y 102BT | B | 148.6/19.8 |
| EP1821 | 6910012350 | S.BEA | MMZ1608Y 102BT | B | 148.6/14.1 |
| EP1825 | 6910012350 | S.BEA | MMZ1608Y 102BT | B | 126.6/7 |
| EP1826 | 6910012350 | S.BEA | MMZ1608Y 102BT | B | 151.5/137.7 |
| EP1830 | 6910012350 | S.BEA | MMZ1608Y 102BT | B | 141.3/135.2 |
| EP1831 | 6910012350 | S.BEA | MMZ1608Y 102BT | B | 143.4/128.5 |
| EP1832 | 6910012350 | S.BEA | MMZ1608Y 102BT | B | 149.2/137.5 |
| EP1833 | 6910012350 | S.BEA | MMZ1608Y 102BT | B | 147.2/133.5 |
| EP1834 | 6910012350 | S.BEA | MMZ1608Y 102BT | T | 115.8/108.3 |
| EP1835 | 6910012350 | S.BEA | MMZ1608Y 102BT | B | 141.6/128.5 |
| EP1836 | 6910012350 | S.BEA | MMZ1608Y 102BT | T | 111/110.2 |
| EP1837 | 6910012350 | S.BEA | MMZ1608Y 102BT | B | 145.8/134.1 |
| EP1838 | 6910012350 | S.BEA | MMZ1608Y 102BT | T | 116.3/106.1 |

## [BPF UNIT]

| REF NO. | ORDER NO. | DESCRIPTION | | M. | H/V LOCATION |
|---|---|---|---|---|---|
| IC101 | 1130011510 | S.IC | BU2099FV-E2 | T | 9.5/77.6 |
| IC102 | 1130011510 | S.IC | BU2099FV-E2 | T | 9.7/100.9 |
| IC401 | 1130011510 | S.IC | BU2099FV-E2 | T | 10.3/39.3 |
| IC402 | 1130011510 | S.IC | BU2099FV-E2 | T | 9.6/59.4 |
| | | | | | |
| Q355 | 1590001330 | S.TR | DTA114EUA T106 | T | 191.6/68.1 |
| Q381 | 1590000680 | S.TR | DTC114EUA T106 | T | 232/60.3 |
| Q383 | 1590000680 | S.TR | DTC114EUA T106 | T | 229.2/51.9 |
| Q384 | 1590000680 | S.TR | DTC114EUA T106 | T | 226.2/51.9 |
| Q385 | 1590000680 | S.TR | DTC114EUA T106 | T | 233.1/54.7 |
| Q386 | 1590000430 | S.TR | DTC144EUA T106 | T | 230.1/54.7 |
| Q387 | 1590000680 | S.TR | DTC114EUA T106 | T | 228.8/60.2 |
| Q401 | 1530002841 | S.TR | 2SC4116-Y (TE85R,F) | T | 234.5/108.2 |
| Q402 | 1530002060 | S.TR | 2SC4081 T106 R | B | 224.2/99.2 |
| Q403 | 1590001330 | S.TR | DTA114EUA T106 | B | 227.6/100.2 |
| Q404 | 1590000430 | S.TR | DTC144EUA T106 | T | 232/108.2 |
| Q855 | 1590001330 | S.TR | DTA114EUA T106 | T | 192/53 |
| Q871 | 1590001330 | S.TR | DTA114EUA T106 | B | 234.6/18.8 |
| Q872 | 1530002060 | S.TR | 2SC4081 T106 R | B | 231.2/19.5 |
| Q873 | 1530002841 | S.TR | 2SC4116-Y (TE85R,F) | B | 231.2/16.6 |
| Q874 | 1590000430 | S.TR | DTC144EUA T106 | T | 195.7/57.4 |
| Q900 | 1590001330 | S.TR | DTA114EUA T106 | B | 217.4/116.1 |
| Q901 | 1530003851 | S.TR | 2SC5551F-TD-E | T | 210.3/113.5 |
| Q902 | 1590001330 | S.TR | DTA114EUA T106 | T | 200.6/115.1 |
| Q903 | 1530003851 | S.TR | 2SC5551F-TD-E | T | 189.4/113.5 |
| Q950 | 1590001330 | S.TR | DTA114EUA T106 | B | 215/3.2 |
| Q951 | 1530003851 | S.TR | 2SC5551F-TD-E | T | 209.8/17.6 |
| Q952 | 1590001330 | S.TR | DTA114EUA T106 | B | 199.1/4 |
| Q953 | 1530003851 | S.TR | 2SC5551F-TD-E | T | 188.6/17.6 |
| | | | | | |
| D1 | 1790001250 | S.DIO | MA2S111-(TX) | T | 184/75.2 |
| D21 | 1790001250 | S.DIO | MA2S111-(TX) | B | 167.1/77.7 |
| D51 | 1790001250 | S.DIO | MA2S111-(TX) | T | 163.7/68.6 |
| D81 | 1790001250 | S.DIO | MA2S111-(TX) | B | 141.5/68.1 |
| D111 | 1790001250 | S.DIO | MA2S111-(TX) | T | 107.4/67.6 |
| D141 | 1790001250 | S.DIO | MA2S111-(TX) | T | 94.7/70.3 |
| D171 | 1790001250 | S.DIO | MA2S111-(TX) | B | 81.6/74.3 |
| D201 | 1790001250 | S.DIO | MA2S111-(TX) | B | 70.2/73.1 |
| D231 | 1790001250 | S.DIO | MA2S111-(TX) | T | 49.4/69.1 |
| D261 | 1790001250 | S.DIO | MA2S111-(TX) | B | 35.4/70.1 |
| D291 | 1790001250 | S.DIO | MA2S111-(TX) | B | 203.9/71.9 |
| D321 | 1790001250 | S.DIO | MA2S111-(TX) | T | 204/97.5 |
| D351 | 1790001250 | S.DIO | MA2S111-(TX) | T | 189/94.9 |
| D352 | 1790001250 | S.DIO | MA2S111-(TX) | T | 189/88.7 |
| D353 | 1790001250 | S.DIO | MA2S111-(TX) | T | 189/82.5 |
| D354 | 1790001250 | S.DIO | MA2S111-(TX) | T | 189/76.3 |
| D355 | 1790001250 | S.DIO | MA2S111-(TX) | T | 193.9/66.2 |
| D371 | 1790001250 | S.DIO | MA2S111-(TX) | T | 218.5/69.9 |
| D373 | 1790001250 | S.DIO | MA2S111-(TX) | B | 239.8/116.1 |
| D391 | 1750000581 | S.DIO | 1SV307 (TPH3,F) | B | 233.2/49.9 |
| D392 | 1750000581 | S.DIO | 1SV307 (TPH3,F) | B | 236/52.9 |
| D393 | 1750000581 | S.DIO | 1SV307 (TPH3,F) | B | 235.3/63.7 |
| D401 | 1790001250 | S.DIO | MA2S111-(TX) | B | 225.6/95.5 |
| D402 | 1790000980 | S.DIO | MA742 (TX) | B | 233.9/113.2 |
| D501 | 1790001250 | S.DIO | MA2S111-(TX) | B | 184.1/45.6 |
| D531 | 1790001250 | S.DIO | MA2S111-(TX) | B | 167.7/53.7 |
| D561 | 1790001250 | S.DIO | MA2S111-(TX) | B | 164.4/42.5 |
| D591 | 1790001250 | S.DIO | MA2S111-(TX) | B | 144.1/53.4 |
| D621 | 1790001250 | S.DIO | MA2S111-(TX) | T | 107.6/52.6 |
| D651 | 1790001250 | S.DIO | MA2S111-(TX) | T | 94.9/49.6 |
| D681 | 1790001250 | S.DIO | MA2S111-(TX) | B | 81.5/45.7 |
| D711 | 1790001250 | S.DIO | MA2S111-(TX) | B | 70/44.3 |
| D741 | 1790001250 | S.DIO | MA2S111-(TX) | B | 51.4/50.5 |
| D771 | 1790001250 | S.DIO | MA2S111-(TX) | B | 36.5/43.7 |
| D801 | 1790001250 | S.DIO | MA2S111-(TX) | B | 203.8/47.4 |
| D831 | 1790001250 | S.DIO | MA2S111-(TX) | T | 203.7/22.1 |
| D851 | 1790001250 | S.DIO | MA2S111-(TX) | T | 189/27.9 |
| D852 | 1790001250 | S.DIO | MA2S111-(TX) | T | 189/33.1 |
| D853 | 1790001250 | S.DIO | MA2S111-(TX) | T | 189/39.3 |
| D854 | 1790001250 | S.DIO | MA2S111-(TX) | T | 189/45.5 |
| D855 | 1790001250 | S.DIO | MA2S111-(TX) | T | 194/52.8 |
| D871 | 1790001250 | S.DIO | MA2S111-(TX) | B | 241.4/18 |
| D872 | 1790000980 | S.DIO | MA742 (TX) | B | 247.7/15.6 |
| D873 | 1790001250 | S.DIO | MA2S111-(TX) | B | 243/94.1 |
| D900 | 1790001250 | S.DIO | MA2S111-(TX) | B | 218.9/100.4 |
| D901 | 1790001250 | S.DIO | MA2S111-(TX) | T | 207.9/100.7 |
| D902 | 1790001250 | S.DIO | MA2S111-(TX) | B | 197/100.2 |
| D903 | 1790001250 | S.DIO | MA2S111-(TX) | B | 186.4/100.5 |
| D950 | 1790001250 | S.DIO | MA2S111-(TX) | B | 212.3/3.9 |
| D951 | 1790001250 | S.DIO | MA2S111-(TX) | T | 204.4/4.5 |
| D952 | 1790001250 | S.DIO | MA2S111-(TX) | B | 195.7/4.9 |
| D953 | 1790001250 | S.DIO | MA2S111-(TX) | B | 182.6/5.3 |
| D954 | 1790001250 | S.DIO | MA2S111-(TX) | T | 235.4/16.2 |
| | | | | | |
| L1 | 6200005521 | S.COL | NLV25T-470J | T | 186.7/100.6 |
| L2 | 6200005521 | S.COL | NLV25T-470J | B | 183.8/77.2 |
| L3 | 6200010830 | S.COL | C2520C-3R3G-A | T | 179.2/88.5 |
| L4 | 6200010830 | S.COL | C2520C-3R3G-A | T | 179.2/80.2 |
| L5 | 6200010830 | S.COL | C2520C-3R3G-A | T | 178.2/84.3 |
| L6 | 6200010830 | S.COL | C2520C-3R3G-A | T | 178/76.2 |
| L21 | 6200005521 | S.COL | NLV25T-470J | B | 166/107.5 |
| L22 | 6200005521 | S.COL | NLV25T-470J | B | 163/107.5 |
| L23 | 6140004040 | COL | LR-443 | | |
| L24 | 6140004050 | COL | LR-444 | | |
| L25 | 6140004050 | COL | LR-444 | | |
| L26 | 6140004050 | COL | LR-444 | | |
| L27 | 6140004040 | COL | LR-443 | | |
| L51 | 6200005521 | S.COL | NLV25T-470J | B | 154.3/111.3 |
| L52 | 6200005521 | S.COL | NLV25T-470J | B | 151.3/107.2 |
| L53 | 6140004060 | COL | LR-445 | | |
| L54 | 6140004080 | COL | LR-446 | | |

M.=Mounted side (T: Mounted on the Top side, B: Mounted on the Bottom side)
S.=Surface mount

## [BPF UNIT]

| REF NO. | ORDER NO. | DESCRIPTION | M. | H/V LOCATION |
|---|---|---|---|---|
| L55 | 6140004080 | COL LR-446 | | |
| L56 | 6140004080 | COL LR-446 | | |
| L57 | 6140004060 | COL LR-445 | | |
| L81 | 6200005521 | S.COL NLV25T-470J | B | 142.1/109.6 |
| L82 | 6200005521 | S.COL NLV25T-470J | B | 139.1/107.3 |
| L83 | 6140004090 | COL LR-447 | | |
| L84 | 6140004230 | COL LR-458 | | |
| L85 | 6140004230 | COL LR-458 | | |
| L86 | 6140004230 | COL LR-458 | | |
| L87 | 6140004090 | COL LR-447 | | |
| L111 | 6200005521 | S.COL NLV25T-470J | B | 118.1/109.1 |
| L112 | 6200005521 | S.COL NLV25T-470J | B | 114.5/109.1 |
| L113 | 6140004090 | COL LR-447 | | |
| L114 | 6140004100 | COL LR-448 | | |
| L115 | 6140004100 | COL LR-448 | | |
| L116 | 6140004100 | COL LR-448 | | |
| L117 | 6140004090 | COL LR-447 | | |
| L141 | 6200005521 | S.COL NLV25T-470J | B | 106.8/111.4 |
| L142 | 6200005521 | S.COL NLV25T-470J | B | 100.3/107.6 |
| L143 | 6140004110 | COL LR-449 | | |
| L144 | 6140004120 | COL LR-450 | | |
| L145 | 6140004120 | COL LR-450 | | |
| L146 | 6140004120 | COL LR-450 | | |
| L147 | 6140004110 | COL LR-449 | | |
| L171 | 6200005521 | S.COL NLV25T-470J | B | 84.9/116.9 |
| L172 | 6200005521 | S.COL NLV25T-470J | B | 81.8/115.4 |
| L173 | 6140004140 | COL LR-451 | | |
| L174 | 6140004150 | COL LR-452 | | |
| L175 | 6140004150 | COL LR-452 | | |
| L176 | 6140004150 | COL LR-452 | | |
| L177 | 6140004140 | COL LR-451 | | |
| L201 | 6200007021 | S.COL NLV25T-270J | B | 61.9/112 |
| L202 | 6200007021 | S.COL NLV25T-270J | B | 59.4/109.7 |
| L203 | 6140004160 | COL LR-453 | | |
| L204 | 6140004180 | COL LR-454 | | |
| L205 | 6140004180 | COL LR-454 | | |
| L206 | 6140004180 | COL LR-454 | | |
| L207 | 6140004160 | COL LR-453 | | |
| L231 | 6200005011 | S.COL NLV25T-100J | B | 44.2/116.9 |
| L232 | 6200005011 | S.COL NLV25T-100J | B | 44.1/114.3 |
| L233 | 6140004190 | COL LR-455 | | |
| L234 | 6140004210 | COL LR-456 | | |
| L235 | 6140004210 | COL LR-456 | | |
| L236 | 6140004210 | COL LR-456 | | |
| L237 | 6140004190 | COL LR-455 | | |
| L261 | 6200009141 | S.COL NLV25T-6R8J | B | 27.3/111.4 |
| L262 | 6200009141 | S.COL NLV25T-6R8J | B | 24.8/109.7 |
| L263 | 6140004220 | COL LR-457 | | |
| L264 | 6140004160 | COL LR-453 | | |
| L265 | 6140004160 | COL LR-453 | | |
| L266 | 6140004160 | COL LR-453 | | |
| L267 | 6140004220 | COL LR-457 | | |
| L291 | 6200003281 | S.COL NLV25T-2R2J | B | 222.8/74.1 |
| L292 | 6200003281 | S.COL NLV25T-2R2J | B | 214/75.1 |
| L293 | 6200008090 | S.COL LQW2BHN68NJ03L | T | 214.7/79.6 |
| L294 | 6200003041 | S.COL NLV32T-R68J | T | 213.5/82.7 |
| L295 | 6200008090 | S.COL LQW2BHN68NJ03L | T | 210.1/79.6 |
| L296 | 6200010870 | S.COL C2520C-R33G-A (0.33U) | T | 209.9/76.6 |
| L321 | 6200003281 | S.COL NLV25T-2R2J | B | 209.5/93.5 |
| L322 | 6200003281 | S.COL NLV25T-2R2J | B | 213.2/95.3 |
| L323 | 6200003011 | S.COL NLV32T-R27J | T | 214.2/91 |
| L324 | 6200003001 | S.COL NLV32T-R22J | T | 209.7/87.1 |
| L325 | 6200003011 | S.COL NLV32T-R27J | T | 209.6/93.2 |
| L371 | 6140004390 | COL LR-459 | | |
| L372 | 6140004390 | COL LR-459 | | |
| L373 | 6140003530 | COL LR-395 | | |
| L391 | 6200005491 | S.COL NLV32T-331J | T | 230.2/48.4 |
| L392 | 6200005491 | S.COL NLV32T-331J | T | 231.7/64 |
| L393 | 6200003211 | S.COL NLV32T-820J | B | 231.7/42.7 |
| L394 | 6200005491 | S.COL NLV32T-331J | B | 236.2/46.6 |
| L395 | 6200005491 | S.COL NLV32T-331J | B | 225.5/48.3 |
| L501 | 6200005521 | S.COL NLV25T-470J | B | 183.7/36.2 |
| L502 | 6200005521 | S.COL NLV25T-470J | B | 184.6/41 |
| L504 | 6200010830 | S.COL C2520C-3R3G-A | T | 178.7/33.1 |
| L505 | 6200010830 | S.COL C2520C-3R3G-A | T | 177.8/41.5 |
| L506 | 6200010830 | S.COL C2520C-3R3G-A | T | 178.9/37.6 |
| L507 | 6200010830 | S.COL C2520C-3R3G-A | T | 179.1/45 |
| L531 | 6200005521 | S.COL NLV25T-470J | B | 167.5/13 |
| L532 | 6200005521 | S.COL NLV25T-470J | B | 170.5/13 |
| L533 | 6140004040 | COL LR-443 | | |
| L534 | 6140004050 | COL LR-444 | | |
| L535 | 6140004050 | COL LR-444 | | |
| L536 | 6140004050 | COL LR-444 | | |
| L537 | 6140004040 | COL LR-443 | | |
| L561 | 6200005521 | S.COL NLV25T-470J | B | 149.9/12.4 |
| L562 | 6200005521 | S.COL NLV25T-470J | B | 153.8/16.5 |
| L563 | 6140004060 | COL LR-445 | | |
| L564 | 6140004080 | COL LR-446 | | |
| L565 | 6140004080 | COL LR-446 | | |
| L566 | 6140004080 | COL LR-446 | | |
| L567 | 6140004060 | COL LR-445 | | |
| L591 | 6200005521 | S.COL NLV25T-470J | B | 139.9/9.2 |
| L592 | 6200005521 | S.COL NLV25T-470J | B | 142.7/9.2 |
| L593 | 6140004090 | COL LR-447 | | |
| L594 | 6140004230 | COL LR-458 | | |
| L595 | 6140004230 | COL LR-458 | | |
| L596 | 6140004230 | COL LR-458 | | |
| L597 | 6140004090 | COL LR-447 | | |
| L621 | 6200005521 | S.COL NLV25T-470J | B | 116.8/9.5 |
| L622 | 6200005521 | S.COL NLV25T-470J | B | 122.4/6.3 |
| L623 | 6140004090 | COL LR-447 | | |
| L624 | 6140004100 | COL LR-448 | | |
| L625 | 6140004100 | COL LR-448 | | |
| L626 | 6140004100 | COL LR-448 | | |

## [BPF UNIT]

| REF NO. | ORDER NO. | DESCRIPTION | M. | H/V LOCATION |
|---|---|---|---|---|
| L627 | 6140004090 | COL LR-447 | | |
| L651 | 6200005521 | S.COL NLV25T-470J | B | 105.4/13 |
| L652 | 6200005521 | S.COL NLV25T-470J | B | 108/9.5 |
| L653 | 6140004110 | COL LR-449 | | |
| L654 | 6140004120 | COL LR-450 | | |
| L655 | 6140004120 | COL LR-450 | | |
| L656 | 6140004120 | COL LR-450 | | |
| L657 | 6140004110 | COL LR-449 | | |
| L681 | 6200005521 | S.COL NLV25T-470J | B | 77.4/6.2 |
| L682 | 6200005521 | S.COL NLV25T-470J | B | 80.4/3.8 |
| L683 | 6140004140 | COL LR-451 | | |
| L684 | 6140004150 | COL LR-452 | | |
| L685 | 6140004150 | COL LR-452 | | |
| L686 | 6140004150 | COL LR-452 | | |
| L687 | 6140004140 | COL LR-451 | | |
| L711 | 6200007021 | S.COL NLV25T-270J | B | 56.4/10.8 |
| L712 | 6200007021 | S.COL NLV25T-270J | B | 61.1/8.8 |
| L713 | 6140004160 | COL LR-453 | | |
| L714 | 6140004180 | COL LR-454 | | |
| L715 | 6140004180 | COL LR-454 | | |
| L716 | 6140004180 | COL LR-454 | | |
| L717 | 6140004160 | COL LR-453 | | |
| L741 | 6200005011 | S.COL NLV25T-100J | B | 44.2/6.2 |
| L742 | 6200005011 | S.COL NLV25T-100J | B | 46.2/3.4 |
| L743 | 6140004190 | COL LR-455 | | |
| L744 | 6140004210 | COL LR-456 | | |
| L745 | 6140004210 | COL LR-456 | | |
| L746 | 6140004210 | COL LR-456 | | |
| L747 | 6140004190 | COL LR-455 | | |
| L771 | 6200009141 | S.COL NLV25T-6R8J | B | 23.4/10.6 |
| L772 | 6200009141 | S.COL NLV25T-6R8J | B | 27.1/9 |
| L773 | 6140004220 | COL LR-457 | | |
| L774 | 6140004160 | COL LR-453 | | |
| L775 | 6140004160 | COL LR-453 | | |
| L776 | 6140004160 | COL LR-453 | | |
| L777 | 6140004220 | COL LR-457 | | |
| L801 | 6200003281 | S.COL NLV25T-2R2J | B | 214.4/45.7 |
| L802 | 6200003281 | S.COL NLV25T-2R2J | B | 211.8/42.4 |
| L805 | 6200008090 | S.COL LQW2BHN68NJ03L | T | 214.6/41.4 |
| L806 | 6200003041 | S.COL NLV32T-R68J | T | 211.5/36.9 |
| L807 | 6200008090 | S.COL LQW2BHN68NJ03L | T | 209.7/40 |
| L808 | 6200010870 | S.COL C2520C-R33G-A (0.33U) | T | 209.8/43 |
| L831 | 6200003281 | S.COL NLV25T-2R2J | B | 211.6/26.7 |
| L832 | 6200003281 | S.COL NLV25T-2R2J | B | 213.2/23.7 |
| L833 | 6200003011 | S.COL NLV32T-R27J | T | 214.2/29.7 |
| L834 | 6200003001 | S.COL NLV32T-R22J | T | 209.7/32.9 |
| L835 | 6200003011 | S.COL NLV32T-R27J | T | 209.4/27.3 |
| L900 | 6200001831 | S.COL NLV32T-100J | B | 213.2/113.1 |
| L901 | 6200003950 | S.COL HF50ACC 322513-T | B | 11.6/20.4 |
| L902 | 6200003950 | S.COL HF50ACC 322513-T | B | 11.7/16.4 |
| L903 | 6200001831 | S.COL NLV32T-100J | T | 7.4/27.5 |
| L904 | 6200001831 | S.COL NLV32T-100J | T | 11.6/27.5 |
| L905 | 6140004380 | COL LR-498 | | |
| L906 | 6200009690 | S.COL LQH43CN101K03L | T | 216.9/114.5 |
| L907 | 6200001831 | S.COL NLV32T-100J | B | 193.1/113.1 |
| L908 | 6140004380 | COL LR-498 | | |
| L909 | 6200009690 | S.COL LQH43CN101K03L | T | 196/115.1 |
| L950 | 6200001831 | S.COL NLV32T-100J | B | 211.8/17 |
| L951 | 6140004380 | COL LR-498 | | |
| L952 | 6200009690 | S.COL LQH43CN101K03L | T | 213.8/3.4 |
| L953 | 6200001831 | S.COL NLV32T-100J | B | 191.1/17 |
| L954 | 6140004380 | COL LR-498 | | |
| L955 | 6200009690 | S.COL LQH43CN101K03L | T | 196/3.3 |
| | | | | |
| R1 | 7030003640 | S.RES ERJ3GEYJ 473 V (47 k) | T | 181.4/92.2 |
| R3 | 7030003860 | S.RES ERJ3GE JPW V | T | 182.1/90.3 |
| R101 | 7030003320 | S.RES ERJ3GEYJ 101 V (100) | T | 7.2/67.9 |
| R102 | 7030003320 | S.RES ERJ3GEYJ 101 V (100) | T | 7.9/71.3 |
| R103 | 7030003320 | S.RES ERJ3GEYJ 101 V (100) | T | 8.7/67.9 |
| R104 | 7030003320 | S.RES ERJ3GEYJ 101 V (100) | T | 9.3/71 |
| R105 | 7030003320 | S.RES ERJ3GEYJ 101 V (100) | T | 10.6/71 |
| R106 | 7030003320 | S.RES ERJ3GEYJ 101 V (100) | T | 11.3/89.9 |
| R107 | 7030003320 | S.RES ERJ3GEYJ 101 V (100) | T | 11.6/87.9 |
| R108 | 7030003320 | S.RES ERJ3GEYJ 101 V (100) | T | 11.1/83.2 |
| R117 | 7030003320 | S.RES ERJ3GEYJ 101 V (100) | T | 9.8/83.5 |
| R118 | 7030003320 | S.RES ERJ3GEYJ 101 V (100) | T | 8.5/83.5 |
| R119 | 7030003320 | S.RES ERJ3GEYJ 101 V (100) | T | 7.4/87.2 |
| R120 | 7030003320 | S.RES ERJ3GEYJ 101 V (100) | T | 6.7/83.2 |
| R121 | 7030003320 | S.RES ERJ3GEYJ 101 V (100) | T | 6.9/92.2 |
| R122 | 7030003320 | S.RES ERJ3GEYJ 101 V (100) | T | 7.1/94.8 |
| R123 | 7030003320 | S.RES ERJ3GEYJ 101 V (100) | B | 10/95.5 |
| R124 | 7030003320 | S.RES ERJ3GEYJ 101 V (100) | T | 11/94.3 |
| R133 | 7030003560 | S.RES ERJ3GEYJ 103 V (10 k) | T | 191.2/55.8 |
| R134 | 7030003320 | S.RES ERJ3GEYJ 101 V (100) | B | 10/98.9 |
| R141 | 7030003360 | S.RES ERJ3GEYJ 221 V (220) | B | 5.6/14 |
| R142 | 7030003360 | S.RES ERJ3GEYJ 221 V (220) | B | 5.6/15.7 |
| R143 | 7030003360 | S.RES ERJ3GEYJ 221 V (220) | B | 5.1/19.2 |
| R351 | 7030003340 | S.RES ERJ3GEYJ 151 V (150) | B | 197.7/90.7 |
| R352 | 7030003300 | S.RES ERJ3GEYJ 680 V (68) | B | 193.9/87.5 |
| R354 | 7030003280 | S.RES ERJ3GEYJ 470 V (47) | B | 200.9/84.8 |
| R355 | 7030003320 | S.RES ERJ3GEYJ 101 V (100) | B | 193.9/81.3 |
| R357 | 7030003240 | S.RES ERJ3GEYJ 220 V (22) | B | 197.8/71.6 |
| R358 | 7030003350 | S.RES ERJ3GEYJ 181 V (180) | B | 194.4/70.3 |
| R360 | 7030003320 | S.RES ERJ3GEYJ 101 V (100) | T | 191.8/66.1 |
| R371 | 7030003320 | S.RES ERJ3GEYJ 101 V (100) | T | 217.4/71.2 |
| R372 | 7030003320 | S.RES ERJ3GEYJ 101 V (100) | B | 209.5/61.9 |
| R373 | 7030003320 | S.RES ERJ3GEYJ 101 V (100) | B | 209.5/58.9 |
| R381 | 7030003520 | S.RES ERJ3GEYJ 472 V (4.7 k) | T | 231.4/51.9 |
| R382 | 7030003360 | S.RES ERJ3GEYJ 221 V (220) | B | 239.8/112.7 |
| R383 | 7030003680 | S.RES ERJ3GEYJ 104 V (100 k) | T | 232.3/49.1 |
| R384 | 7030003420 | S.RES ERJ3GEYJ 681 V (680) | B | 236/49.9 |
| R385 | 7030003420 | S.RES ERJ3GEYJ 681 V (680) | B | 231.3/46.7 |
| R386 | 7030003480 | S.RES ERJ3GEYJ 222 V (2.2 k) | B | 237.6/62.6 |

M.=Mounted side (T: Mounted on the Top side, B: Mounted on the Bottom side)
S.=Surface mount

## [BPF UNIT]

| REF NO. | ORDER NO. | DESCRIPTION | M. | H/V LOCATION |
|---|---|---|---|---|
| R387 | 7030003560 | S.RES ERJ3GEYJ 103 V (10 k) | B | 238.8/55.5 |
| R388 | 7540000130 | ABS 2P-50A-301 | | |
| R389 | 7030003420 | S.RES ERJ3GEYJ 681 V (680) | T | 235/65.4 |
| R390 | 7030003560 | S.RES ERJ3GEYJ 103 V (10 k) | T | 233/51.9 |
| R391 | 7030003680 | S.RES ERJ3GEYJ 104 V (100 k) | T | 234.3/51.9 |
| R392 | 7030003420 | S.RES ERJ3GEYJ 681 V (680) | B | 234.7/49.9 |
| R393 | 7030003420 | S.RES ERJ3GEYJ 681 V (680) | B | 231.3/48 |
| R394 | 7030003420 | S.RES ERJ3GEYJ 681 V (680) | T | 235/64.1 |
| R395 | 7030003420 | S.RES ERJ3GEYJ 681 V (680) | B | 235.2/56.4 |
| R396 | 7030003420 | S.RES ERJ3GEYJ 681 V (680) | B | 235.2/55.1 |
| R401 | 7030003360 | S.RES ERJ3GEYJ 221 V (220) | B | 227.6/96.2 |
| R402 | 7030003680 | S.RES ERJ3GEYJ 104 V (100 k) | T | 234.5/111.6 |
| R403 | 7030003480 | S.RES ERJ3GEYJ 222 V (2.2 k) | T | 231.9/110.3 |
| R404 | 7030003860 | S.RES ERJ3GE JPW V | T | 234.5/110.3 |
| R441 | 7030003360 | S.RES ERJ3GEYJ 221 V (220) | B | 11/24.4 |
| R442 | 7030003360 | S.RES ERJ3GEYJ 221 V (220) | B | 8.2/23.4 |
| R451 | 7030003320 | S.RES ERJ3GEYJ 101 V (100) | T | 10.6/32.9 |
| R452 | 7030003320 | S.RES ERJ3GEYJ 101 V (100) | T | 11.9/33.1 |
| R453 | 7030003320 | S.RES ERJ3GEYJ 101 V (100) | T | 13.2/33.1 |
| R454 | 7030003320 | S.RES ERJ3GEYJ 101 V (100) | T | 14.5/33.1 |
| R455 | 7030003320 | S.RES ERJ3GEYJ 101 V (100) | T | 14.5/36.9 |
| R456 | 7030003320 | S.RES ERJ3GEYJ 101 V (100) | T | 11.1/46.9 |
| R457 | 7030003320 | S.RES ERJ3GEYJ 101 V (100) | T | 8.9/46.3 |
| R458 | 7030003320 | S.RES ERJ3GEYJ 101 V (100) | T | 8.9/47.6 |
| R467 | 7030003320 | S.RES ERJ3GEYJ 101 V (100) | T | 10.6/49.6 |
| R468 | 7030003320 | S.RES ERJ3GEYJ 101 V (100) | T | 13.6/50.2 |
| R469 | 7030003320 | S.RES ERJ3GEYJ 101 V (100) | T | 7.6/49.4 |
| R470 | 7030003320 | S.RES ERJ3GEYJ 101 V (100) | T | 6.9/50.7 |
| R471 | 7030003320 | S.RES ERJ3GEYJ 101 V (100) | T | 6.2/52.6 |
| R472 | 7030003320 | S.RES ERJ3GEYJ 101 V (100) | T | 9.2/53 |
| R473 | 7030003320 | S.RES ERJ3GEYJ 101 V (100) | T | 10.5/53.7 |
| R474 | 7030003320 | S.RES ERJ3GEYJ 101 V (100) | T | 11.8/54.2 |
| R475 | 7030003320 | S.RES ERJ3GEYJ 101 V (100) | T | 10.7/63.9 |
| R481 | 7030003560 | S.RES ERJ3GEYJ 103 V (10 k) | B | 196.9/55.9 |
| R501 | 7030003640 | S.RES ERJ3GEYJ 473 V (47 k) | T | 183/30 |
| R503 | 7030003860 | S.RES ERJ3GE JPW V | T | 182.2/31.9 |
| R851 | 7030003340 | S.RES ERJ3GEYJ 151 V (150) | B | 198.2/32.1 |
| R852 | 7030003300 | S.RES ERJ3GEYJ 680 V (68) | B | 193.5/32.1 |
| R854 | 7030003280 | S.RES ERJ3GEYJ 470 V (47) | B | 200.9/34.7 |
| R855 | 7030003320 | S.RES ERJ3GEYJ 101 V (100) | B | 193.5/38.3 |
| R857 | 7030003240 | S.RES ERJ3GEYJ 220 V (22) | B | 197.9/48.2 |
| R858 | 7030003350 | S.RES ERJ3GEYJ 181 V (180) | B | 193.8/49.7 |
| R860 | 7030003320 | S.RES ERJ3GEYJ 101 V (100) | T | 192/51 |
| R871 | 7030003360 | S.RES ERJ3GEYJ 221 V (220) | B | 238/19.5 |
| R872 | 7030003680 | S.RES ERJ3GEYJ 104 V (100 k) | B | 236.5/14.4 |
| R873 | 7030003480 | S.RES ERJ3GEYJ 222 V (2.2 k) | B | 239.6/16 |
| R874 | 7030003860 | S.RES ERJ3GE JPW V | B | 236.5/16 |
| R900 | 7030003280 | S.RES ERJ3GEYJ 470 V (47) | B | 212.8/117.1 |
| R901 | 7030003440 | S.RES ERJ3GEYJ 102 V (1 k) | T | 207.2/117.4 |
| R902 | 7030003530 | S.RES ERJ3GEYJ 562 V (5.6 k) | T | 210.4/116.6 |
| R903 | 7030003380 | S.RES ERJ3GEYJ 331 V (330) | B | 203.9/113.3 |
| R904 | 7030003220 | S.RES ERJ3GEYJ 150 V (15) | B | 206.3/111.6 |
| R905 | 7030003380 | S.RES ERJ3GEYJ 331 V (330) | B | 203.3/111.8 |
| R906 | 7030003320 | S.RES ERJ3GEYJ 101 V (100) | T | 12.5/92.8 |
| R907 | 7030003320 | S.RES ERJ3GEYJ 101 V (100) | T | 13.8/92.8 |
| R908 | 7030003280 | S.RES ERJ3GEYJ 470 V (47) | B | 194.5/116.4 |
| R909 | 7030003440 | S.RES ERJ3GEYJ 102 V (1 k) | T | 185.4/115.9 |
| R910 | 7030003530 | S.RES ERJ3GEYJ 562 V (5.6 k) | T | 189.6/116.7 |
| R911 | 7030003320 | S.RES ERJ3GEYJ 101 V (100) | B | 209.4/110.8 |
| R912 | 7030003320 | S.RES ERJ3GEYJ 101 V (100) | B | 187.5/111.2 |
| R913 | 7030004050 | S.RES ERJ3GEYJ 1R0 V (1) | B | 189.7/106.1 |
| R950 | 7030003280 | S.RES ERJ3GEYJ 470 V (47) | B | 210.2/20 |
| R951 | 7030003440 | S.RES ERJ3GEYJ 102 V (1 k) | T | 207.7/21.4 |
| R952 | 7030003530 | S.RES ERJ3GEYJ 562 V (5.6 k) | T | 211/20.8 |
| R953 | 7030003380 | S.RES ERJ3GEYJ 331 V (330) | B | 203.4/18.4 |
| R954 | 7030003220 | S.RES ERJ3GEYJ 150 V (15) | B | 205.6/16.7 |
| R955 | 7030003380 | S.RES ERJ3GEYJ 331 V (330) | B | 202.8/16.7 |
| R956 | 7030003320 | S.RES ERJ3GEYJ 101 V (100) | T | 8.3/65 |
| R957 | 7030003320 | S.RES ERJ3GEYJ 101 V (100) | B | 11.6/60.5 |
| R958 | 7030003280 | S.RES ERJ3GEYJ 470 V (47) | B | 189.5/19.9 |
| R959 | 7030003440 | S.RES ERJ3GEYJ 102 V (1 k) | T | 186.5/21.4 |
| R960 | 7030003530 | S.RES ERJ3GEYJ 562 V (5.6 k) | T | 191.5/20 |
| R961 | 7030003320 | S.RES ERJ3GEYJ 101 V (100) | B | 208.3/16.4 |
| R962 | 7030003320 | S.RES ERJ3GEYJ 101 V (100) | B | 187.7/16.4 |
| R963 | 7030004050 | S.RES ERJ3GEYJ 1R0 V (1) | B | 181.4/16.5 |
| | | | | |
| C1 | 4030006880 | S.CER C1608 JB 1H 472K-T | B | 183.4/92.3 |
| C2 | 4030006880 | S.CER C1608 JB 1H 472K-T | T | 185.3/91.5 |
| C3 | 4030006880 | S.CER C1608 JB 1H 472K-T | T | 184.1/99.8 |
| C4 | 4030006880 | S.CER C1608 JB 1H 472K-T | B | 183.1/73.9 |
| C5 | 4030006880 | S.CER C1608 JB 1H 472K-T | B | 182.5/66.5 |
| C6 | 4030006880 | S.CER C1608 JB 1H 472K-T | T | 183.9/73.9 |
| C7 | 4030017840 | S.CER C2012 CH 1H 222J-T | T | 182.8/86.4 |
| C8 | 4030017850 | S.CER C2012 CH 1H 272J-T | T | 182.9/84.1 |
| C9 | 4030017820 | S.CER C2012 CH 1H 122J-T | T | 182.9/82.3 |
| C10 | 4030017840 | S.CER C2012 CH 1H 222J-T | T | 182.8/77.5 |
| C21 | 4030006880 | S.CER C1608 JB 1H 472K-T | B | 165.3/112.2 |
| C22 | 4030006880 | S.CER C1608 JB 1H 472K-T | B | 162.3/112.2 |
| C23 | 4030006880 | S.CER C1608 JB 1H 472K-T | B | 166.8/110.5 |
| C24 | 4030006880 | S.CER C1608 JB 1H 472K-T | T | 163.7/81.5 |
| C25 | 4030006880 | S.CER C1608 JB 1H 472K-T | B | 171.5/76.9 |
| C26 | 4030006880 | S.CER C1608 JB 1H 472K-T | B | 168.9/77.7 |
| C27 | 4030017810 | S.CER C1608 CH 1H 102J-T | B | 162.6/104.3 |
| C28 | 4030017810 | S.CER C1608 CH 1H 102J-T | B | 162.6/102.4 |
| C29 | 4030010760 | S.CER C1608 CH 1H 331J-T | B | 168.7/98 |
| C30 | 4030007140 | S.CER C1608 CH 1H 121J-T | B | 168.7/96.1 |
| C31 | 4030007160 | S.CER C1608 CH 1H 181J-T | B | 164.1/93.9 |
| C32 | 4030007060 | S.CER C1608 CH 1H 270J-T | B | 166.1/94 |
| C33 | 4030010760 | S.CER C1608 CH 1H 331J-T | B | 168.7/93.2 |
| C34 | 4030007090 | S.CER C1608 CH 1H 470J-T | B | 168.7/90.8 |
| C35 | 4030007160 | S.CER C1608 CH 1H 181J-T | B | 164.3/89.3 |
| C36 | 4030007060 | S.CER C1608 CH 1H 270J-T | B | 164.2/91 |
| C38 | 4030010760 | S.CER C1608 CH 1H 331J-T | B | 165.6/83.4 |

## [BPF UNIT]

| REF NO. | ORDER NO. | DESCRIPTION | M. | H/V LOCATION |
|---|---|---|---|---|
| C39 | 4030007140 | S.CER C1608 CH 1H 121J-T | B | 165.6/85.5 |
| C40 | 4030017810 | S.CER C1608 CH 1H 102J-T | B | 170/74.5 |
| C41 | 4030017810 | S.CER C1608 CH 1H 102J-T | B | 170/72.7 |
| C51 | 4030006880 | S.CER C1608 JB 1H 472K-T | T | 153.8/116 |
| C52 | 4030006880 | S.CER C1608 JB 1H 472K-T | B | 150.6/112.3 |
| C53 | 4030006880 | S.CER C1608 JB 1H 472K-T | B | 153.8/116 |
| C54 | 4030006880 | S.CER C1608 JB 1H 472K-T | B | 160.3/71.9 |
| C55 | 4030006880 | S.CER C1608 JB 1H 472K-T | B | 160.2/65.2 |
| C56 | 4030006880 | S.CER C1608 JB 1H 472K-T | T | 165.1/68.5 |
| C57 | 4030017800 | S.CER C1608 CH 1H 561J-T | B | 143.6/99.3 |
| C58 | 4030010760 | S.CER C1608 CH 1H 331J-T | B | 143.6/97.2 |
| C59 | 4030010760 | S.CER C1608 CH 1H 331J-T | B | 144.2/94.6 |
| C60 | 4030007080 | S.CER C1608 CH 1H 390J-T | B | 144.2/92.2 |
| C61 | 4030007100 | S.CER C1608 CH 1H 560J-T | B | 141.8/90.2 |
| C62 | 4030010760 | S.CER C1608 CH 1H 331J-T | B | 139.5/90.2 |
| C63 | 4030010760 | S.CER C1608 CH 1H 331J-T | B | 143.8/83 |
| C64 | 4030007090 | S.CER C1608 CH 1H 470J-T | B | 143.8/85.3 |
| C65 | 4030010760 | S.CER C1608 CH 1H 331J-T | B | 141.1/82 |
| C66 | 4030007100 | S.CER C1608 CH 1H 560J-T | B | 138.9/82 |
| C67 | 4030010760 | S.CER C1608 CH 1H 331J-T | B | 143.7/78.7 |
| C68 | 4030007080 | S.CER C1608 CH 1H 390J-T | B | 143.7/81.1 |
| C69 | 4030017800 | S.CER C1608 CH 1H 561J-T | B | 144/75.1 |
| C70 | 4030010760 | S.CER C1608 CH 1H 331J-T | B | 144/77.1 |
| C81 | 4030006880 | S.CER C1608 JB 1H 472K-T | B | 139.9/115 |
| C82 | 4030006880 | S.CER C1608 JB 1H 472K-T | B | 138.1/111.8 |
| C83 | 4030006880 | S.CER C1608 JB 1H 472K-T | B | 140.7/117 |
| C84 | 4030006880 | S.CER C1608 JB 1H 472K-T | B | 138.4/72.1 |
| C85 | 4030006880 | S.CER C1608 JB 1H 472K-T | B | 144.9/66.5 |
| C86 | 4030006880 | S.CER C1608 JB 1H 472K-T | B | 143/68.1 |
| C87 | 4030017800 | S.CER C1608 CH 1H 561J-T | B | 126.7/116.6 |
| C88 | 4030011330 | S.CER C1608 CH 1H 391J-T | B | 126.7/114.8 |
| C89 | 4030007160 | S.CER C1608 CH 1H 181J-T | B | 126.8/104.3 |
| C90 | 4030007070 | S.CER C1608 CH 1H 330J-T | B | 126.8/106.2 |
| C91 | 4030007030 | S.CER C1608 CH 1H 150J-T | B | 130.7/102.1 |
| C92 | 4030007120 | S.CER C1608 CH 1H 820J-T | B | 128.9/102.1 |
| C93 | 4030007140 | S.CER C1608 CH 1H 121J-T | B | 126.6/101.3 |
| C94 | 4030007100 | S.CER C1608 CH 1H 560J-T | B | 126.6/99.6 |
| C95 | 4030007120 | S.CER C1608 CH 1H 820J-T | B | 129.4/92.5 |
| C96 | 4030007030 | S.CER C1608 CH 1H 150J-T | B | 131.4/92.5 |
| C97 | 4030007160 | S.CER C1608 CH 1H 181J-T | B | 126.7/89.6 |
| C98 | 4030007070 | S.CER C1608 CH 1H 330J-T | B | 126.7/88 |
| C99 | 4030017800 | S.CER C1608 CH 1H 561J-T | B | 126.7/86.1 |
| C100 | 4030011330 | S.CER C1608 CH 1H 391J-T | B | 126.7/84.3 |
| C111 | 4030006880 | S.CER C1608 JB 1H 472K-T | B | 118.1/115.2 |
| C112 | 4030006880 | S.CER C1608 JB 1H 472K-T | B | 115.2/112.4 |
| C113 | 4030006880 | S.CER C1608 JB 1H 472K-T | B | 118.9/117.6 |
| C114 | 4030006880 | S.CER C1608 JB 1H 472K-T | B | 107.7/69.4 |
| C115 | 4030006880 | S.CER C1608 JB 1H 472K-T | B | 104.3/65.9 |
| C116 | 4030006880 | S.CER C1608 JB 1H 472K-T | T | 108.7/67.5 |
| C117 | 4030010760 | S.CER C1608 CH 1H 331J-T | B | 110.3/109.3 |
| C118 | 4030007150 | S.CER C1608 CH 1H 151J-T | B | 110.3/107.8 |
| C119 | 4030007150 | S.CER C1608 CH 1H 151J-T | B | 110.3/96.6 |
| C120 | 4030007060 | S.CER C1608 CH 1H 270J-T | B | 110.3/98.3 |
| C121 | 4030007060 | S.CER C1608 CH 1H 270J-T | B | 106.8/95 |
| C122 | 4030007140 | S.CER C1608 CH 1H 121J-T | B | 105.2/95 |
| C123 | 4030007150 | S.CER C1608 CH 1H 151J-T | B | 110.3/94.3 |
| C124 | 4030007010 | S.CER C1608 CH 1H 100D-T | B | 110.3/92.7 |
| C125 | 4030007140 | S.CER C1608 CH 1H 121J-T | B | 109.6/84.4 |
| C126 | 4030007060 | S.CER C1608 CH 1H 270J-T | B | 107.5/84.4 |
| C127 | 4030007150 | S.CER C1608 CH 1H 151J-T | B | 110.3/80.6 |
| C128 | 4030007060 | S.CER C1608 CH 1H 270J-T | B | 110.3/78.7 |
| C129 | 4030010760 | S.CER C1608 CH 1H 331J-T | B | 110.3/73.7 |
| C130 | 4030007150 | S.CER C1608 CH 1H 151J-T | B | 110.4/72 |
| C141 | 4030006880 | S.CER C1608 JB 1H 472K-T | B | 105.2/115.2 |
| C142 | 4030006880 | S.CER C1608 JB 1H 472K-T | B | 97.2/108.7 |
| C143 | 4030006880 | S.CER C1608 JB 1H 472K-T | B | 105.6/117.6 |
| C144 | 4030006880 | S.CER C1608 JB 1H 472K-T | B | 91/72.9 |
| C145 | 4030006880 | S.CER C1608 JB 1H 472K-T | B | 90.2/65.9 |
| C146 | 4030006880 | S.CER C1608 JB 1H 472K-T | T | 93.4/70.3 |
| C147 | 4030007170 | S.CER C1608 CH 1H 221J-T | B | 92.3/109.8 |
| C148 | 4030007170 | S.CER C1608 CH 1H 221J-T | B | 92.3/108 |
| C149 | 4030007130 | S.CER C1608 CH 1H 101J-T | B | 92.4/104.5 |
| C150 | 4030007050 | S.CER C1608 CH 1H 220J-T | B | 92.4/102.6 |
| C151 | 4030007070 | S.CER C1608 CH 1H 330J-T | B | 93.1/99.9 |
| C152 | 4030007080 | S.CER C1608 CH 1H 390J-T | B | 94.8/99.9 |
| C153 | 4030007120 | S.CER C1608 CH 1H 820J-T | B | 92.4/94.8 |
| C154 | 4030007050 | S.CER C1608 CH 1H 220J-T | B | 92.4/93.3 |
| C155 | 4030007080 | S.CER C1608 CH 1H 390J-T | B | 95.5/92.5 |
| C156 | 4030007070 | S.CER C1608 CH 1H 330J-T | B | 97.7/92.5 |
| C157 | 4030007130 | S.CER C1608 CH 1H 101J-T | B | 92.4/90.8 |
| C158 | 4030007050 | S.CER C1608 CH 1H 220J-T | B | 92.4/89.2 |
| C159 | 4030007170 | S.CER C1608 CH 1H 221J-T | B | 92.4/79.9 |
| C160 | 4030007170 | S.CER C1608 CH 1H 221J-T | B | 92.4/77.8 |
| C171 | 4030006880 | S.CER C1608 JB 1H 472K-T | B | 73.9/115.2 |
| C172 | 4030006880 | S.CER C1608 JB 1H 472K-T | B | 71.1/112.4 |
| C173 | 4030006880 | S.CER C1608 JB 1H 472K-T | B | 74.9/117.6 |
| C174 | 4030006880 | S.CER C1608 JB 1H 472K-T | B | 78.9/72.9 |
| C175 | 4030006880 | S.CER C1608 JB 1H 472K-T | B | 77.9/65.8 |
| C176 | 4030006880 | S.CER C1608 JB 1H 472K-T | B | 81.6/75.9 |
| C177 | 4030007170 | S.CER C1608 CH 1H 221J-T | B | 78.3/115.3 |
| C178 | 4030007110 | S.CER C1608 CH 1H 680J-T | B | 78.3/112.9 |
| C179 | 4030007090 | S.CER C1608 CH 1H 470J-T | B | 74.1/103.9 |
| C180 | 4030007090 | S.CER C1608 CH 1H 470J-T | B | 74.1/105.7 |
| C181 | 4030007070 | S.CER C1608 CH 1H 330J-T | B | 73.3/101.4 |
| C182 | 4030007070 | S.CER C1608 CH 1H 330J-T | B | 71.4/101.4 |
| C183 | 4030007120 | S.CER C1608 CH 1H 820J-T | B | 74.1/98.9 |
| C185 | 4030007070 | S.CER C1608 CH 1H 330J-T | B | 73.3/93.6 |
| C186 | 4030007070 | S.CER C1608 CH 1H 330J-T | B | 71.4/93.6 |
| C187 | 4030007090 | S.CER C1608 CH 1H 470J-T | B | 74.1/90.2 |
| C188 | 4030007090 | S.CER C1608 CH 1H 470J-T | B | 74.1/88.1 |
| C189 | 4030007170 | S.CER C1608 CH 1H 221J-T | B | 74.1/85.9 |
| C190 | 4030007110 | S.CER C1608 CH 1H 680J-T | B | 74.1/83.9 |
| C201 | 4030006880 | S.CER C1608 JB 1H 472K-T | B | 61.6/115.2 |
| C202 | 4030006880 | S.CER C1608 JB 1H 472K-T | B | 58.8/112.4 |

M.=Mounted side (T: Mounted on the Top side, B: Mounted on the Bottom side)
S.=Surface mount

## [BPF UNIT]

| REF NO. | ORDER NO. | DESCRIPTION | M. | H/V LOCATION |
|---|---|---|---|---|
| C203 | 4030006880 | S.CER C1608 JB 1H 472K-T | B | 58.2/116.1 |
| C204 | 4030006880 | S.CER C1608 JB 1H 472K-T | B | 66.4/76.6 |
| C205 | 4030006880 | S.CER C1608 JB 1H 472K-T | B | 71.2/80.2 |
| C206 | 4030006880 | S.CER C1608 JB 1H 472K-T | B | 70.2/74.8 |
| C207 | 4030007160 | S.CER C1608 CH 1H 181J-T | B | 57.7/103.6 |
| C208 | 4030007090 | S.CER C1608 CH 1H 470J-T | B | 57.7/102 |
| C209 | 4030007090 | S.CER C1608 CH 1H 470J-T | B | 64.8/95.3 |
| C210 | 4030007040 | S.CER C1608 CH 1H 180J-T | B | 63.2/95.3 |
| C211 | 4030007030 | S.CER C1608 CH 1H 150J-T | B | 60.8/94.5 |
| C212 | 4030007050 | S.CER C1608 CH 1H 220J-T | B | 60.8/92.9 |
| C213 | 4030007090 | S.CER C1608 CH 1H 470J-T | B | 57.7/92.9 |
| C214 | 4030006990 | S.CER C1608 CH 1H 080D-T | B | 57.7/94.5 |
| C215 | 4030007050 | S.CER C1608 CH 1H 220J-T | B | 60.1/85.1 |
| C216 | 4030007030 | S.CER C1608 CH 1H 150J-T | B | 58.5/85.1 |
| C217 | 4030007090 | S.CER C1608 CH 1H 470J-T | B | 57.7/82.7 |
| C218 | 4030007040 | S.CER C1608 CH 1H 180J-T | B | 57.7/81.1 |
| C219 | 4030007160 | S.CER C1608 CH 1H 181J-T | B | 57.7/79.5 |
| C220 | 4030007090 | S.CER C1608 CH 1H 470J-T | B | 57.7/77.9 |
| C231 | 4030006880 | S.CER C1608 JB 1H 472K-T | B | 39.4/115.3 |
| C232 | 4030006880 | S.CER C1608 JB 1H 472K-T | B | 36.6/112.4 |
| C233 | 4030006880 | S.CER C1608 JB 1H 472K-T | B | 40.3/117.5 |
| C234 | 4030006880 | S.CER C1608 JB 1H 472K-T | B | 46.2/73.5 |
| C235 | 4030006880 | S.CER C1608 JB 1H 472K-T | B | 49/69.2 |
| C236 | 4030006880 | S.CER C1608 JB 1H 472K-T | B | 50.4/69.1 |
| C237 | 4030007140 | S.CER C1608 CH 1H 121J-T | B | 41.2/109.8 |
| C238 | 4030007040 | S.CER C1608 CH 1H 180J-T | B | 41.2/108.2 |
| C239 | 4030007070 | S.CER C1608 CH 1H 330J-T | B | 41.2/103.8 |
| C240 | 4030007040 | S.CER C1608 CH 1H 180J-T | B | 41.2/102.2 |
| C241 | 4030007010 | S.CER C1608 CH 1H 100D-T | B | 40.5/99.8 |
| C242 | 4030007070 | S.CER C1608 CH 1H 330J-T | B | 38.9/99.8 |
| C243 | 4030007090 | S.CER C1608 CH 1H 470J-T | B | 41.2/94.8 |
| C245 | 4030007070 | S.CER C1608 CH 1H 330J-T | B | 40.5/91.3 |
| C246 | 4030007010 | S.CER C1608 CH 1H 100D-T | B | 38.9/91.3 |
| C247 | 4030007070 | S.CER C1608 CH 1H 330J-T | B | 41.2/88.9 |
| C248 | 4030007040 | S.CER C1608 CH 1H 180J-T | B | 41.2/87.3 |
| C249 | 4030007140 | S.CER C1608 CH 1H 121J-T | B | 41.2/85.7 |
| C250 | 4030007040 | S.CER C1608 CH 1H 180J-T | B | 41.2/84.1 |
| C261 | 4030006880 | S.CER C1608 JB 1H 472K-T | B | 27/115.2 |
| C262 | 4030006880 | S.CER C1608 JB 1H 472K-T | B | 24.3/112.4 |
| C263 | 4030006880 | S.CER C1608 JB 1H 472K-T | B | 29.7/111.6 |
| C264 | 4030006880 | S.CER C1608 JB 1H 472K-T | T | 36.5/70.9 |
| C265 | 4030006880 | S.CER C1608 JB 1H 472K-T | T | 36.6/67.9 |
| C266 | 4030006880 | S.CER C1608 JB 1H 472K-T | B | 36.7/70 |
| C267 | 4030007130 | S.CER C1608 CH 1H 101J-T | B | 23.2/103.5 |
| C268 | 4030007030 | S.CER C1608 CH 1H 150J-T | B | 23.2/101.9 |
| C269 | 4030007050 | S.CER C1608 CH 1H 220J-T | B | 30.3/95.3 |
| C270 | 4030007020 | S.CER C1608 CH 1H 120J-T | B | 28.7/95.3 |
| C271 | 4030007050 | S.CER C1608 CH 1H 220J-T | B | 26.3/94.5 |
| C273 | 4030007050 | S.CER C1608 CH 1H 220J-T | B | 23.2/94.5 |
| C274 | 4030006980 | S.CER C1608 CH 1H 070D-T | B | 23.2/92.9 |
| C275 | 4030007050 | S.CER C1608 CH 1H 220J-T | B | 24/85.1 |
| C277 | 4030007050 | S.CER C1608 CH 1H 220J-T | B | 23.2/81.1 |
| C278 | 4030007020 | S.CER C1608 CH 1H 120J-T | B | 23.2/82.7 |
| C279 | 4030007130 | S.CER C1608 CH 1H 101J-T | B | 23.3/73.6 |
| C280 | 4030007030 | S.CER C1608 CH 1H 150J-T | B | 23.3/77.9 |
| C291 | 4030006880 | S.CER C1608 JB 1H 472K-T | B | 218.9/73.3 |
| C292 | 4030006880 | S.CER C1608 JB 1H 472K-T | B | 214.4/77.4 |
| C293 | 4030006880 | S.CER C1608 JB 1H 472K-T | B | 222.7/76.6 |
| C294 | 4030006880 | S.CER C1608 JB 1H 472K-T | B | 209.7/73 |
| C295 | 4030006880 | S.CER C1608 JB 1H 472K-T | B | 207.6/77.5 |
| C296 | 4030006880 | S.CER C1608 JB 1H 472K-T | B | 203.9/73.5 |
| C297 | 4030007150 | S.CER C1608 CH 1H 151J-T | T | 213/79.9 |
| C302 | 4030007030 | S.CER C1608 CH 1H 150J-T | T | 210.2/82.7 |
| C303 | 4030007130 | S.CER C1608 CH 1H 101J-T | T | 211.7/79.9 |
| C304 | 4030007040 | S.CER C1608 CH 1H 180J-T | T | 208.4/79.9 |
| C321 | 4030006880 | S.CER C1608 JB 1H 472K-T | T | 218.8/97.4 |
| C322 | 4030006880 | S.CER C1608 JB 1H 472K-T | T | 218.8/98.7 |
| C323 | 4030006880 | S.CER C1608 JB 1H 472K-T | B | 213/91 |
| C324 | 4030006880 | S.CER C1608 JB 1H 472K-T | B | 209.3/90.7 |
| C325 | 4030006880 | S.CER C1608 JB 1H 472K-T | T | 206.6/98.8 |
| C326 | 4030006880 | S.CER C1608 JB 1H 472K-T | T | 204/98.8 |
| C327 | 4030007100 | S.CER C1608 CH 1H 560J-T | T | 210.7/90.3 |
| C329 | 4030007110 | S.CER C1608 CH 1H 680J-T | T | 208.1/90.3 |
| C331 | 4030007100 | S.CER C1608 CH 1H 560J-T | T | 208.8/96.6 |
| C353 | 4030006880 | S.CER C1608 JB 1H 472K-T | B | 189.1/91.2 |
| C354 | 4030006880 | S.CER C1608 JB 1H 472K-T | B | 189.5/94.6 |
| C355 | 4030006880 | S.CER C1608 JB 1H 472K-T | T | 189/92.4 |
| C356 | 4030006880 | S.CER C1608 JB 1H 472K-T | B | 189.5/86.4 |
| C357 | 4030006880 | S.CER C1608 JB 1H 472K-T | T | 189/86.1 |
| C358 | 4030006880 | S.CER C1608 JB 1H 472K-T | B | 189.1/89.1 |
| C359 | 4030006880 | S.CER C1608 JB 1H 472K-T | T | 189/79.9 |
| C360 | 4030006880 | S.CER C1608 JB 1H 472K-T | B | 189.5/80.2 |
| C361 | 4030006880 | S.CER C1608 JB 1H 472K-T | B | 189.5/83 |
| C362 | 4030006880 | S.CER C1608 JB 1H 472K-T | T | 189/73.7 |
| C363 | 4030006880 | S.CER C1608 JB 1H 472K-T | B | 189.5/74 |
| C364 | 4030006880 | S.CER C1608 JB 1H 472K-T | B | 189.5/76.8 |
| C365 | 4030006880 | S.CER C1608 JB 1H 472K-T | T | 194/68.8 |
| C371 | 4030006880 | S.CER C1608 JB 1H 472K-T | T | 215.9/69.9 |
| C388 | 4030006880 | S.CER C1608 JB 1H 472K-T | B | 239.8/114.3 |
| C389 | 4030010210 | S.CER C3216 JB 1C 105M-T | B | 247.3/111.1 |
| C390 | 4030011600 | S.CER C1608 JB 1E 104K-T | T | 226.2/49.8 |
| C391 | 4030011600 | S.CER C1608 JB 1E 104K-T | B | 237.5/53.2 |
| C392 | 4030011600 | S.CER C1608 JB 1E 104K-T | T | 228.9/62.5 |
| C393 | 4030008860 | S.CER C1608 JB 1H 153K-T | B | 233.2/45.5 |
| C394 | 4030010210 | S.CER C3216 JB 1C 105M-T | B | 235.1/59.6 |
| C395 | 4030008860 | S.CER C1608 JB 1H 153K-T | B | 233.2/40 |
| C396 | 4030011600 | S.CER C1608 JB 1E 104K-T | B | 235.5/43.8 |
| C397 | 4550006470 | S.TAN TEESVB2 1D 106M8R | B | 227/44 |
| C398 | 4030011600 | S.CER C1608 JB 1E 104K-T | T | 5.4/102.8 |
| C399 | 4030011600 | S.CER C1608 JB 1E 104K-T | T | 5.3/77.8 |
| C401 | 4030006880 | S.CER C1608 JB 1H 472K-T | B | 223.9/95.5 |
| C402 | 4030010210 | S.CER C3216 JB 1C 105M-T | B | 234/107.1 |
| C403 | 4030009520 | S.CER C1608 CH 1H 020B-T | B | 233.9/109.3 |
| C404 | 4030007050 | S.CER C1608 CH 1H 220J-T | B | 233.9/110.9 |

## [BPF UNIT]

| REF NO. | ORDER NO. | DESCRIPTION | M. | H/V LOCATION |
|---|---|---|---|---|
| C405 | 4030010760 | S.CER C1608 CH 1H 331J-T | B | 236.1/113.4 |
| C498 | 4030011600 | S.CER C1608 JB 1E 104K-T | T | 5.3/60.4 |
| C499 | 4030011600 | S.CER C1608 JB 1E 104K-T | T | 6.1/39.7 |
| C501 | 4030006880 | S.CER C1608 JB 1H 472K-T | B | 184.9/22 |
| C502 | 4030006880 | S.CER C1608 JB 1H 472K-T | B | 181.6/22 |
| C503 | 4030006880 | S.CER C1608 JB 1H 472K-T | B | 183.9/31.7 |
| C504 | 4030006880 | S.CER C1608 JB 1H 472K-T | B | 183.7/54.7 |
| C505 | 4030006880 | S.CER C1608 JB 1H 472K-T | T | 185.3/47.1 |
| C506 | 4030006880 | S.CER C1608 JB 1H 472K-T | B | 184.1/47.2 |
| C507 | 4030017840 | S.CER C2012 CH 1H 222J-T | T | 183/35.4 |
| C508 | 4030017850 | S.CER C2012 CH 1H 272J-T | T | 182.9/37.7 |
| C509 | 4030017820 | S.CER C2012 CH 1H 122J-T | T | 182.9/39.5 |
| C510 | 4030017840 | S.CER C2012 CH 1H 222J-T | T | 182.9/44.3 |
| C531 | 4030006880 | S.CER C1608 JB 1H 472K-T | B | 165.7/5.6 |
| C532 | 4030006880 | S.CER C1608 JB 1H 472K-T | B | 165.2/2.3 |
| C533 | 4030006880 | S.CER C1608 JB 1H 472K-T | B | 164.5/9 |
| C534 | 4030006880 | S.CER C1608 JB 1H 472K-T | B | 164/54.6 |
| C535 | 4030006880 | S.CER C1608 JB 1H 472K-T | B | 167.7/49.6 |
| C536 | 4030006880 | S.CER C1608 JB 1H 472K-T | B | 169.4/53.7 |
| C537 | 4030017810 | S.CER C1608 CH 1H 102J-T | B | 168.6/20.1 |
| C538 | 4030017810 | S.CER C1608 CH 1H 102J-T | B | 168.6/21.9 |
| C539 | 4030010760 | S.CER C1608 CH 1H 331J-T | B | 168.3/24.5 |
| C540 | 4030007140 | S.CER C1608 CH 1H 121J-T | B | 168.3/26.7 |
| C541 | 4030007160 | S.CER C1608 CH 1H 181J-T | B | 165.3/27.6 |
| C542 | 4030007060 | S.CER C1608 CH 1H 270J-T | B | 162.5/27.7 |
| C543 | 4030010760 | S.CER C1608 CH 1H 331J-T | B | 168.3/28.8 |
| C544 | 4030007090 | S.CER C1608 CH 1H 470J-T | B | 168.3/30.6 |
| C545 | 4030007160 | S.CER C1608 CH 1H 181J-T | B | 162.9/34.2 |
| C546 | 4030007060 | S.CER C1608 CH 1H 270J-T | B | 164.9/34.1 |
| C547 | 4030010760 | S.CER C1608 CH 1H 331J-T | B | 168.1/35.1 |
| C548 | 4030007140 | S.CER C1608 CH 1H 121J-T | B | 168.1/36.7 |
| C549 | 4030017810 | S.CER C1608 CH 1H 102J-T | B | 170.3/43.4 |
| C550 | 4030017810 | S.CER C1608 CH 1H 102J-T | B | 170.3/45.9 |
| C561 | 4030006880 | S.CER C1608 JB 1H 472K-T | B | 153/8 |
| C562 | 4030006880 | S.CER C1608 JB 1H 472K-T | B | 153/11.9 |
| C563 | 4030006880 | S.CER C1608 JB 1H 472K-T | B | 152/10 |
| C564 | 4030006880 | S.CER C1608 JB 1H 472K-T | T | 161.4/46.3 |
| C565 | 4030006880 | S.CER C1608 JB 1H 472K-T | B | 162.2/38.8 |
| C566 | 4030006880 | S.CER C1608 JB 1H 472K-T | T | 165.5/42.4 |
| C567 | 4030017800 | S.CER C1608 CH 1H 561J-T | B | 147.9/17.4 |
| C568 | 4030010760 | S.CER C1608 CH 1H 331J-T | B | 148.5/15.2 |
| C569 | 4030010760 | S.CER C1608 CH 1H 331J-T | B | 144.6/25.7 |
| C570 | 4030007080 | S.CER C1608 CH 1H 390J-T | B | 144.6/27.4 |
| C571 | 4030007100 | S.CER C1608 CH 1H 560J-T | B | 141.6/28.1 |
| C572 | 4030010760 | S.CER C1608 CH 1H 331J-T | B | 139.8/28.1 |
| C573 | 4030010760 | S.CER C1608 CH 1H 331J-T | B | 144.3/34.2 |
| C574 | 4030007090 | S.CER C1608 CH 1H 470J-T | B | 144.3/35.7 |
| C575 | 4030010760 | S.CER C1608 CH 1H 331J-T | B | 141.5/38.6 |
| C576 | 4030007100 | S.CER C1608 CH 1H 560J-T | B | 139.8/38.6 |
| C577 | 4030010760 | S.CER C1608 CH 1H 331J-T | B | 144.3/43.2 |
| C578 | 4030007080 | S.CER C1608 CH 1H 390J-T | B | 144.3/40.9 |
| C579 | 4030017800 | S.CER C1608 CH 1H 561J-T | B | 149.7/45.2 |
| C580 | 4030010760 | S.CER C1608 CH 1H 331J-T | B | 147.9/45.2 |
| C591 | 4030006880 | S.CER C1608 JB 1H 472K-T | B | 140.2/5.1 |
| C592 | 4030006880 | S.CER C1608 JB 1H 472K-T | B | 142.2/5.1 |
| C593 | 4030006880 | S.CER C1608 JB 1H 472K-T | B | 133/8.5 |
| C594 | 4030006880 | S.CER C1608 JB 1H 472K-T | B | 140.4/54.3 |
| C595 | 4030006880 | S.CER C1608 JB 1H 472K-T | B | 148.6/52.7 |
| C596 | 4030006880 | S.CER C1608 JB 1H 472K-T | B | 146/53.4 |
| C597 | 4030017800 | S.CER C1608 CH 1H 561J-T | B | 126.7/3.2 |
| C598 | 4030011330 | S.CER C1608 CH 1H 391J-T | B | 126.7/5.4 |
| C599 | 4030007160 | S.CER C1608 CH 1H 181J-T | B | 126.7/15.1 |
| C600 | 4030007070 | S.CER C1608 CH 1H 330J-T | B | 126.7/17.3 |
| C601 | 4030007030 | S.CER C1608 CH 1H 150J-T | B | 129.6/18.2 |
| C602 | 4030007120 | S.CER C1608 CH 1H 820J-T | B | 131.6/18.2 |
| C603 | 4030007140 | S.CER C1608 CH 1H 121J-T | B | 126.8/20.5 |
| C604 | 4030007100 | S.CER C1608 CH 1H 560J-T | B | 126.8/18.9 |
| C605 | 4030007120 | S.CER C1608 CH 1H 820J-T | B | 131.4/26.8 |
| C606 | 4030007030 | S.CER C1608 CH 1H 150J-T | B | 129.6/26.8 |
| C607 | 4030007160 | S.CER C1608 CH 1H 181J-T | B | 127.3/29 |
| C608 | 4030007070 | S.CER C1608 CH 1H 330J-T | B | 127.3/31.3 |
| C609 | 4030017800 | S.CER C1608 CH 1H 561J-T | B | 127.3/33.3 |
| C610 | 4030011330 | S.CER C1608 CH 1H 391J-T | B | 127.3/35.5 |
| C621 | 4030006880 | S.CER C1608 JB 1H 472K-T | B | 118.5/4.7 |
| C622 | 4030006880 | S.CER C1608 JB 1H 472K-T | B | 121.2/4 |
| C623 | 4030006880 | S.CER C1608 JB 1H 472K-T | B | 113.8/8.2 |
| C624 | 4030006880 | S.CER C1608 JB 1H 472K-T | T | 110.3/54.1 |
| C625 | 4030006880 | S.CER C1608 JB 1H 472K-T | B | 107.4/51.4 |
| C626 | 4030006880 | S.CER C1608 JB 1H 472K-T | T | 109/52.6 |
| C627 | 4030010760 | S.CER C1608 CH 1H 331J-T | B | 109.3/17.8 |
| C628 | 4030007150 | S.CER C1608 CH 1H 151J-T | B | 109.3/19.7 |
| C629 | 4030007150 | S.CER C1608 CH 1H 151J-T | B | 109.2/21.7 |
| C630 | 4030007060 | S.CER C1608 CH 1H 270J-T | B | 109.2/23.6 |
| C631 | 4030007060 | S.CER C1608 CH 1H 270J-T | B | 105.2/25.8 |
| C632 | 4030007140 | S.CER C1608 CH 1H 121J-T | B | 106.9/25.8 |
| C633 | 4030007150 | S.CER C1608 CH 1H 151J-T | B | 109.3/33.9 |
| C634 | 4030007010 | S.CER C1608 CH 1H 100D-T | B | 109.3/31.7 |
| C635 | 4030007140 | S.CER C1608 CH 1H 121J-T | B | 108.5/37.9 |
| C636 | 4030007060 | S.CER C1608 CH 1H 270J-T | B | 105.9/37.9 |
| C637 | 4030007150 | S.CER C1608 CH 1H 151J-T | B | 109.3/40.4 |
| C638 | 4030007060 | S.CER C1608 CH 1H 270J-T | B | 109.3/42.2 |
| C639 | 4030010760 | S.CER C1608 CH 1H 331J-T | B | 110.2/46.5 |
| C640 | 4030007150 | S.CER C1608 CH 1H 151J-T | B | 110.2/48.5 |
| C651 | 4030006880 | S.CER C1608 JB 1H 472K-T | B | 105.1/7.8 |
| C652 | 4030006880 | S.CER C1608 JB 1H 472K-T | B | 105.1/4.1 |
| C653 | 4030006880 | S.CER C1608 JB 1H 472K-T | B | 103/10.2 |
| C654 | 4030006880 | S.CER C1608 JB 1H 472K-T | T | 90.4/54.2 |
| C655 | 4030006880 | S.CER C1608 JB 1H 472K-T | B | 92.1/46.9 |
| C656 | 4030006880 | S.CER C1608 JB 1H 472K-T | T | 93.5/49.6 |
| C657 | 4030007170 | S.CER C1608 CH 1H 221J-T | B | 92.2/6 |
| C658 | 4030007170 | S.CER C1608 CH 1H 221J-T | B | 92.2/4.4 |
| C659 | 4030007130 | S.CER C1608 CH 1H 101J-T | B | 92.5/14.8 |
| C660 | 4030007050 | S.CER C1608 CH 1H 220J-T | B | 92.5/17 |
| C661 | 4030007070 | S.CER C1608 CH 1H 330J-T | B | 95.2/19.6 |

M.=Mounted side (T: Mounted on the Top side, B: Mounted on the Bottom side)
S.=Surface mount

## [BPF UNIT]

| REF NO. | ORDER NO. | DESCRIPTION | M. | H/V LOCATION |
|---|---|---|---|---|
| C662 | 4030007080 | S.CER C1608 CH 1H 390J-T | B | 93.2/19.6 |
| C663 | 4030007120 | S.CER C1608 CH 1H 820J-T | B | 92.6/27.6 |
| C664 | 4030007050 | S.CER C1608 CH 1H 220J-T | B | 92.6/25.4 |
| C665 | 4030007080 | S.CER C1608 CH 1H 390J-T | B | 95.7/28.3 |
| C666 | 4030007070 | S.CER C1608 CH 1H 330J-T | B | 97.5/28.3 |
| C667 | 4030007130 | S.CER C1608 CH 1H 101J-T | B | 92.2/29.9 |
| C668 | 4030007050 | S.CER C1608 CH 1H 220J-T | B | 92.2/31.8 |
| C669 | 4030007170 | S.CER C1608 CH 1H 221J-T | B | 92.2/33.5 |
| C670 | 4030007170 | S.CER C1608 CH 1H 221J-T | B | 92.2/35.6 |
| C681 | 4030006880 | S.CER C1608 JB 1H 472K-T | B | 74.4/5.1 |
| C682 | 4030006880 | S.CER C1608 JB 1H 472K-T | B | 77.1/3.1 |
| C683 | 4030006880 | S.CER C1608 JB 1H 472K-T | B | 71.5/8.1 |
| C684 | 4030006880 | S.CER C1608 JB 1H 472K-T | T | 78.9/54.1 |
| C685 | 4030006880 | S.CER C1608 JB 1H 472K-T | B | 79.1/46.9 |
| C686 | 4030006880 | S.CER C1608 JB 1H 472K-T | B | 81.6/44 |
| C687 | 4030007170 | S.CER C1608 CH 1H 221J-T | B | 75.5/11 |
| C688 | 4030007110 | S.CER C1608 CH 1H 680J-T | B | 75.5/13.4 |
| C689 | 4030007090 | S.CER C1608 CH 1H 470J-T | B | 70.8/15.2 |
| C690 | 4030007090 | S.CER C1608 CH 1H 470J-T | B | 73/15.2 |
| C691 | 4030007070 | S.CER C1608 CH 1H 330J-T | B | 71/18.7 |
| C692 | 4030007070 | S.CER C1608 CH 1H 330J-T | B | 73/18.7 |
| C693 | 4030007120 | S.CER C1608 CH 1H 820J-T | B | 75.7/21.1 |
| C695 | 4030007070 | S.CER C1608 CH 1H 330J-T | B | 72.6/27 |
| C696 | 4030007070 | S.CER C1608 CH 1H 330J-T | B | 70.9/27 |
| C697 | 4030007090 | S.CER C1608 CH 1H 470J-T | B | 75.6/29.6 |
| C698 | 4030007090 | S.CER C1608 CH 1H 470J-T | B | 75.6/31.7 |
| C699 | 4030007170 | S.CER C1608 CH 1H 221J-T | B | 75.6/35.8 |
| C700 | 4030007110 | S.CER C1608 CH 1H 680J-T | B | 75.6/33.9 |
| C711 | 4030006880 | S.CER C1608 JB 1H 472K-T | B | 62/5.2 |
| C712 | 4030006880 | S.CER C1608 JB 1H 472K-T | B | 63/7.9 |
| C713 | 4030006880 | S.CER C1608 JB 1H 472K-T | B | 58.6/8.3 |
| C714 | 4030006880 | S.CER C1608 JB 1H 472K-T | T | 68.2/54.2 |
| C715 | 4030006880 | S.CER C1608 JB 1H 472K-T | B | 68.4/42.7 |
| C716 | 4030006880 | S.CER C1608 JB 1H 472K-T | B | 70/46.3 |
| C717 | 4030007160 | S.CER C1608 CH 1H 181J-T | B | 57.7/20.1 |
| C718 | 4030007090 | S.CER C1608 CH 1H 470J-T | B | 57.7/17.6 |
| C719 | 4030007090 | S.CER C1608 CH 1H 470J-T | B | 57.4/23.2 |
| C720 | 4030007040 | S.CER C1608 CH 1H 180J-T | B | 57.4/25.2 |
| C721 | 4030007030 | S.CER C1608 CH 1H 150J-T | B | 61/27 |
| C722 | 4030007050 | S.CER C1608 CH 1H 220J-T | B | 63.2/27 |
| C723 | 4030007090 | S.CER C1608 CH 1H 470J-T | B | 57.7/33.7 |
| C724 | 4030006990 | S.CER C1608 CH 1H 080D-T | B | 57.7/31.6 |
| C725 | 4030007050 | S.CER C1608 CH 1H 220J-T | B | 63.3/37.6 |
| C726 | 4030007030 | S.CER C1608 CH 1H 150J-T | B | 61.3/37.6 |
| C727 | 4030007090 | S.CER C1608 CH 1H 470J-T | B | 57.7/38.3 |
| C728 | 4030007040 | S.CER C1608 CH 1H 180J-T | B | 57.7/40.6 |
| C729 | 4030007160 | S.CER C1608 CH 1H 181J-T | B | 57.7/46.2 |
| C730 | 4030007090 | S.CER C1608 CH 1H 470J-T | B | 57.7/48.6 |
| C741 | 4030006880 | S.CER C1608 JB 1H 472K-T | B | 40.8/5.4 |
| C742 | 4030006880 | S.CER C1608 JB 1H 472K-T | B | 42.7/3.4 |
| C743 | 4030006880 | S.CER C1608 JB 1H 472K-T | B | 37/8 |
| C744 | 4030006880 | S.CER C1608 JB 1H 472K-T | T | 46.2/54.2 |
| C745 | 4030006880 | S.CER C1608 JB 1H 472K-T | T | 46.2/46.6 |
| C746 | 4030006880 | S.CER C1608 JB 1H 472K-T | B | 49.5/50.4 |
| C747 | 4030007140 | S.CER C1608 CH 1H 121J-T | B | 41.2/13.3 |
| C748 | 4030007040 | S.CER C1608 CH 1H 180J-T | B | 41.2/10.8 |
| C749 | 4030007070 | S.CER C1608 CH 1H 330J-T | B | 41/18.4 |
| C750 | 4030007040 | S.CER C1608 CH 1H 180J-T | B | 41/16.4 |
| C751 | 4030007010 | S.CER C1608 CH 1H 100D-T | B | 35.3/17.1 |
| C752 | 4030007070 | S.CER C1608 CH 1H 330J-T | B | 37.5/17.1 |
| C753 | 4030007090 | S.CER C1608 CH 1H 470J-T | B | 41/20.3 |
| C755 | 4030007070 | S.CER C1608 CH 1H 330J-T | B | 35.4/25.5 |
| C756 | 4030007010 | S.CER C1608 CH 1H 100D-T | B | 37.5/25.5 |
| C757 | 4030007070 | S.CER C1608 CH 1H 330J-T | B | 41/27.5 |
| C758 | 4030007040 | S.CER C1608 CH 1H 180J-T | B | 41.1/29.4 |
| C759 | 4030007140 | S.CER C1608 CH 1H 121J-T | B | 41.2/32.6 |
| C760 | 4030007040 | S.CER C1608 CH 1H 180J-T | B | 41.2/34.9 |
| C771 | 4030006880 | S.CER C1608 JB 1H 472K-T | B | 27.6/5.5 |
| C772 | 4030006880 | S.CER C1608 JB 1H 472K-T | B | 29.2/8.5 |
| C773 | 4030006880 | S.CER C1608 JB 1H 472K-T | B | 23.5/8.2 |
| C774 | 4030006880 | S.CER C1608 JB 1H 472K-T | T | 35.9/54.4 |
| C775 | 4030006880 | S.CER C1608 JB 1H 472K-T | B | 34.2/44.5 |
| C776 | 4030006880 | S.CER C1608 JB 1H 472K-T | B | 36.4/46.1 |
| C777 | 4030007130 | S.CER C1608 CH 1H 101J-T | B | 24.1/20 |
| C778 | 4030007030 | S.CER C1608 CH 1H 150J-T | B | 24.1/17.9 |
| C779 | 4030007050 | S.CER C1608 CH 1H 220J-T | B | 24/23.6 |
| C780 | 4030007020 | S.CER C1608 CH 1H 120J-T | B | 23.9/25.6 |
| C781 | 4030007050 | S.CER C1608 CH 1H 220J-T | B | 27.5/26.4 |
| C783 | 4030007050 | S.CER C1608 CH 1H 220J-T | B | 24.2/32.3 |
| C784 | 4030006980 | S.CER C1608 CH 1H 070D-T | B | 24.2/34.3 |
| C785 | 4030007050 | S.CER C1608 CH 1H 220J-T | B | 27.8/37.7 |
| C787 | 4030007050 | S.CER C1608 CH 1H 220J-T | B | 24.5/38.5 |
| C788 | 4030007020 | S.CER C1608 CH 1H 120J-T | B | 24.5/40.7 |
| C789 | 4030007130 | S.CER C1608 CH 1H 101J-T | B | 24/46.8 |
| C790 | 4030007030 | S.CER C1608 CH 1H 150J-T | B | 24.1/49.1 |
| C801 | 4030006880 | S.CER C1608 JB 1H 472K-T | B | 218.8/46.3 |
| C802 | 4030006880 | S.CER C1608 JB 1H 472K-T | B | 223/44.4 |
| C803 | 4030006880 | S.CER C1608 JB 1H 472K-T | B | 211.6/44.7 |
| C804 | 4030006880 | S.CER C1608 JB 1H 472K-T | B | 208.8/27.5 |
| C805 | 4030006880 | S.CER C1608 JB 1H 472K-T | B | 208.3/43.7 |
| C806 | 4030006880 | S.CER C1608 JB 1H 472K-T | B | 203.8/46.1 |
| C813 | 4030007150 | S.CER C1608 CH 1H 151J-T | T | 212.6/41.2 |
| C816 | 4030007030 | S.CER C1608 CH 1H 150J-T | T | 213.7/39.1 |
| C820 | 4030007130 | S.CER C1608 CH 1H 101J-T | T | 211.3/39.8 |
| C821 | 4030007040 | S.CER C1608 CH 1H 180J-T | T | 208/39.8 |
| C831 | 4030006880 | S.CER C1608 JB 1H 472K-T | T | 218.9/22.1 |
| C832 | 4030006880 | S.CER C1608 JB 1H 472K-T | T | 218.9/20.8 |
| C833 | 4030006880 | S.CER C1608 JB 1H 472K-T | B | 214.5/27.5 |
| C834 | 4030006880 | S.CER C1608 JB 1H 472K-T | B | 209.8/46.9 |
| C835 | 4030006880 | S.CER C1608 JB 1H 472K-T | T | 201/20.7 |
| C836 | 4030006880 | S.CER C1608 JB 1H 472K-T | T | 203.7/20.7 |
| C837 | 4030007100 | S.CER C1608 CH 1H 560J-T | T | 212/30 |
| C839 | 4030007110 | S.CER C1608 CH 1H 680J-T | T | 207.9/30 |
| C841 | 4030007100 | S.CER C1608 CH 1H 560J-T | T | 208.7/25.1 |

## [BPF UNIT]

| REF NO. | ORDER NO. | DESCRIPTION | M. | H/V LOCATION |
|---|---|---|---|---|
| C853 | 4030006880 | S.CER C1608 JB 1H 472K-T | B | 188.8/25.1 |
| C854 | 4030006880 | S.CER C1608 JB 1H 472K-T | B | 189.5/27.6 |
| C855 | 4030006880 | S.CER C1608 JB 1H 472K-T | T | 189/25.3 |
| C856 | 4030006880 | S.CER C1608 JB 1H 472K-T | B | 189.5/30.5 |
| C857 | 4030006880 | S.CER C1608 JB 1H 472K-T | T | 189/30.5 |
| C858 | 4030006880 | S.CER C1608 JB 1H 472K-T | B | 189.5/33.8 |
| C859 | 4030006880 | S.CER C1608 JB 1H 472K-T | T | 189/36.7 |
| C860 | 4030006880 | S.CER C1608 JB 1H 472K-T | B | 189.5/37.2 |
| C861 | 4030006880 | S.CER C1608 JB 1H 472K-T | B | 189.5/40 |
| C862 | 4030006880 | S.CER C1608 JB 1H 472K-T | T | 189/42.9 |
| C863 | 4030006880 | S.CER C1608 JB 1H 472K-T | B | 189.5/42.9 |
| C864 | 4030006880 | S.CER C1608 JB 1H 472K-T | B | 189.5/45.8 |
| C865 | 4030006880 | S.CER C1608 JB 1H 472K-T | T | 194/50.2 |
| C876 | 4030006880 | S.CER C1608 JB 1H 472K-T | B | 241.3/19.5 |
| C878 | 4030010760 | S.CER C1608 CH 1H 331J-T | B | 245.1/17.9 |
| C879 | 4030007050 | S.CER C1608 CH 1H 220J-T | B | 245.1/19.5 |
| C880 | 4030009520 | S.CER C1608 CH 1H 020B-T | B | 247.9/19.5 |
| C881 | 4030010210 | S.CER C3216 JB 1C 105M-T | B | 244/34 |
| C900 | 4030006880 | S.CER C1608 JB 1H 472K-T | B | 215.5/99.5 |
| C901 | 4030005110 | S.CER C2012 JB 1E 473K-T | T | 15.1/26.8 |
| C902 | 4510008520 | S.ELE EEE1CA470SP | T | 12.3/21.7 |
| C903 | 4030005110 | S.CER C2012 JB 1E 473K-T | B | 12.3/12.9 |
| C904 | 4510009150 | S.ELE EEE1EA470WP | T | 12.3/13.4 |
| C905 | 4030006880 | S.CER C1608 JB 1H 472K-T | B | 244.7/94 |
| C906 | 4030006880 | S.CER C1608 JB 1H 472K-T | B | 244.7/91.2 |
| C907 | 4030006900 | S.CER C1608 JB 1H 103K-T | B | 213.8/106.2 |
| C908 | 4030011600 | S.CER C1608 JB 1E 104K-T | B | 212.8/115.6 |
| C909 | 4030006880 | S.CER C1608 JB 1H 472K-T | B | 218.7/113.5 |
| C910 | 4030006900 | S.CER C1608 JB 1H 103K-T | B | 215.5/117.9 |
| C911 | 4030006900 | S.CER C1608 JB 1H 103K-T | B | 210.6/106.3 |
| C912 | 4030006880 | S.CER C1608 JB 1H 472K-T | B | 201.9/99.6 |
| C914 | 4030006880 | S.CER C1608 JB 1H 472K-T | B | 194.7/99.4 |
| C915 | 4030006900 | S.CER C1608 JB 1H 103K-T | B | 192.6/110.6 |
| C916 | 4030006880 | S.CER C1608 JB 1H 472K-T | T | 200.3/118.3 |
| C917 | 4030006900 | S.CER C1608 JB 1H 103K-T | T | 197.8/117.6 |
| C918 | 4030006900 | S.CER C1608 JB 1H 103K-T | B | 187.3/106.3 |
| C919 | 4030006880 | S.CER C1608 JB 1H 472K-T | B | 180/99.9 |
| C921 | 4030006880 | S.CER C1608 JB 1H 472K-T | T | 201.6/118.3 |
| C922 | 4030011600 | S.CER C1608 JB 1E 104K-T | T | 208.5/117.4 |
| C923 | 4030011600 | S.CER C1608 JB 1E 104K-T | T | 212.3/117.4 |
| C924 | 4030011600 | S.CER C1608 JB 1E 104K-T | B | 192.9/116.4 |
| C925 | 4030011600 | S.CER C1608 JB 1E 104K-T | T | 187.7/117.4 |
| C926 | 4030011600 | S.CER C1608 JB 1E 104K-T | T | 191.6/117.5 |
| C927 | 4030006960 | S.CER C1608 CH 1H 050C-T | B | 209.4/113.7 |
| C928 | 4030006960 | S.CER C1608 CH 1H 050C-T | B | 187.5/114.2 |
| C950 | 4030006880 | S.CER C1608 JB 1H 472K-T | B | 206.3/4.6 |
| C951 | 4030006900 | S.CER C1608 JB 1H 103K-T | B | 215.7/17.8 |
| C952 | 4030011600 | S.CER C1608 JB 1E 104K-T | B | 211.9/20 |
| C953 | 4030006880 | S.CER C1608 JB 1H 472K-T | B | 205.3/2.8 |
| C954 | 4030006900 | S.CER C1608 JB 1H 103K-T | B | 218.6/2.5 |
| C955 | 4030006900 | S.CER C1608 JB 1H 103K-T | B | 208.6/11.4 |
| C956 | 4030006880 | S.CER C1608 JB 1H 472K-T | T | 203.5/2.3 |
| C958 | 4030006880 | S.CER C1608 JB 1H 472K-T | B | 190/4.9 |
| C959 | 4030006900 | S.CER C1608 JB 1H 103K-T | B | 195.2/16.5 |
| C960 | 4030006880 | S.CER C1608 JB 1H 472K-T | B | 196.3/2.3 |
| C961 | 4030006900 | S.CER C1608 JB 1H 103K-T | B | 202.2/4 |
| C962 | 4030006900 | S.CER C1608 JB 1H 103K-T | B | 184/16.5 |
| C963 | 4030006880 | S.CER C1608 JB 1H 472K-T | B | 181/3.9 |
| C965 | 4030006880 | S.CER C1608 JB 1H 472K-T | T | 208.4/3.9 |
| C967 | 4030011600 | S.CER C1608 JB 1E 104K-T | T | 209/21.4 |
| C968 | 4030011600 | S.CER C1608 JB 1E 104K-T | T | 213/21.4 |
| C969 | 4030011600 | S.CER C1608 JB 1E 104K-T | B | 191.6/19.9 |
| C970 | 4030011600 | S.CER C1608 JB 1E 104K-T | T | 187.9/21.4 |
| C971 | 4030011600 | S.CER C1608 JB 1E 104K-T | T | 193/19.8 |
| C972 | 4030006960 | S.CER C1608 CH 1H 050C-T | B | 208.3/19.3 |
| C973 | 4030006960 | S.CER C1608 CH 1H 050C-T | B | 187.7/19.3 |
| C974 | 4030006880 | S.CER C1608 JB 1H 472K-T | B | 235.8/11.5 |
| | | | | |
| RL1 | 6330001750 | RLY FTR-B4CA012Z | | |
| RL2 | 6330001750 | RLY FTR-B4CA012Z | | |
| RL21 | 6330001750 | RLY FTR-B4CA012Z | | |
| RL22 | 6330001750 | RLY FTR-B4CA012Z | | |
| RL51 | 6330001750 | RLY FTR-B4CA012Z | | |
| RL52 | 6330001750 | RLY FTR-B4CA012Z | | |
| RL81 | 6330001750 | RLY FTR-B4CA012Z | | |
| RL82 | 6330001750 | RLY FTR-B4CA012Z | | |
| RL111 | 6330001750 | RLY FTR-B4CA012Z | | |
| RL112 | 6330001750 | RLY FTR-B4CA012Z | | |
| RL141 | 6330001750 | RLY FTR-B4CA012Z | | |
| RL142 | 6330001750 | RLY FTR-B4CA012Z | | |
| RL171 | 6330001750 | RLY FTR-B4CA012Z | | |
| RL172 | 6330001750 | RLY FTR-B4CA012Z | | |
| RL201 | 6330001750 | RLY FTR-B4CA012Z | | |
| RL202 | 6330001750 | RLY FTR-B4CA012Z | | |
| RL231 | 6330001750 | RLY FTR-B4CA012Z | | |
| RL232 | 6330001750 | RLY FTR-B4CA012Z | | |
| RL261 | 6330001750 | RLY FTR-B4CA012Z | | |
| RL262 | 6330001750 | RLY FTR-B4CA012Z | | |
| RL291 | 6330001750 | RLY FTR-B4CA012Z | | |
| RL292 | 6330001750 | RLY FTR-B4CA012Z | | |
| RL321 | 6330001750 | RLY FTR-B4CA012Z | | |
| RL322 | 6330001750 | RLY FTR-B4CA012Z | | |
| RL351 | 6330001750 | RLY FTR-B4CA012Z | | |
| RL352 | 6330001750 | RLY FTR-B4CA012Z | | |
| RL353 | 6330001750 | RLY FTR-B4CA012Z | | |
| RL354 | 6330001750 | RLY FTR-B4CA012Z | | |
| RL355 | 6330001750 | RLY FTR-B4CA012Z | | |
| RL371 | 6330001750 | RLY FTR-B4CA012Z | | |
| RL381 | 6330001770 | RLY SIP-1A-12Y | | |
| RL401 | 6330001770 | RLY SIP-1A-12Y | | |
| RL402 | 6330001750 | RLY FTR-B4CA012Z | | |
| RL501 | 6330001750 | RLY FTR-B4CA012Z | | |
| RL502 | 6330001750 | RLY FTR-B4CA012Z | | |

M.=Mounted side (T: Mounted on the Top side, B: Mounted on the Bottom side)
S.=Surface mount

## [BPF UNIT]

| REF NO. | ORDER NO. | DESCRIPTION | | M. | H/V LOCATION |
|---|---|---|---|---|---|
| RL531 | 6330001750 | RLY | FTR-B4CA012Z | | |
| RL532 | 6330001750 | RLY | FTR-B4CA012Z | | |
| RL561 | 6330001750 | RLY | FTR-B4CA012Z | | |
| RL562 | 6330001750 | RLY | FTR-B4CA012Z | | |
| RL591 | 6330001750 | RLY | FTR-B4CA012Z | | |
| RL592 | 6330001750 | RLY | FTR-B4CA012Z | | |
| RL621 | 6330001750 | RLY | FTR-B4CA012Z | | |
| RL622 | 6330001750 | RLY | FTR-B4CA012Z | | |
| RL651 | 6330001750 | RLY | FTR-B4CA012Z | | |
| RL652 | 6330001750 | RLY | FTR-B4CA012Z | | |
| RL681 | 6330001750 | RLY | FTR-B4CA012Z | | |
| RL682 | 6330001750 | RLY | FTR-B4CA012Z | | |
| RL711 | 6330001750 | RLY | FTR-B4CA012Z | | |
| RL712 | 6330001750 | RLY | FTR-B4CA012Z | | |
| RL741 | 6330001750 | RLY | FTR-B4CA012Z | | |
| RL742 | 6330001750 | RLY | FTR-B4CA012Z | | |
| RL771 | 6330001750 | RLY | FTR-B4CA012Z | | |
| RL772 | 6330001750 | RLY | FTR-B4CA012Z | | |
| RL801 | 6330001750 | RLY | FTR-B4CA012Z | | |
| RL802 | 6330001750 | RLY | FTR-B4CA012Z | | |
| RL831 | 6330001750 | RLY | FTR-B4CA012Z | | |
| RL832 | 6330001750 | RLY | FTR-B4CA012Z | | |
| RL851 | 6330001750 | RLY | FTR-B4CA012Z | | |
| RL852 | 6330001750 | RLY | FTR-B4CA012Z | | |
| RL853 | 6330001750 | RLY | FTR-B4CA012Z | | |
| RL854 | 6330001750 | RLY | FTR-B4CA012Z | | |
| RL855 | 6330001750 | RLY | FTR-B4CA012Z | | |
| RL871 | 6330001770 | RLY | SIP-1A-12Y | | |
| RL900 | 6330001750 | RLY | FTR-B4CA012Z | | |
| RL901 | 6330001750 | RLY | FTR-B4CA012Z | | |
| RL902 | 6330001750 | RLY | FTR-B4CA012Z | | |
| RL903 | 6330001750 | RLY | FTR-B4CA012Z | | |
| RL950 | 6330001750 | RLY | FTR-B4CA012Z | | |
| RL951 | 6330001750 | RLY | FTR-B4CA012Z | | |
| RL952 | 6330001750 | RLY | FTR-B4CA012Z | | |
| RL953 | 6330001750 | RLY | FTR-B4CA012Z | | |
| RL954 | 6330001750 | RLY | FTR-B4CA012Z | | |
| | | | | | |
| J1 | 6510020521 | S.CNR | 52808-1271 (1290) | T | 6/17 |
| J101 | 6510007020 | CNR | TMP-J01X-V6 | | |
| J102 | 6510007020 | CNR | TMP-J01X-V6 | | |
| J103 | 6510023750 | CNR | 01K1971-10 | | |
| J104 | 6510023750 | CNR | 01K1971-10 | | |
| J105 | 6510023750 | CNR | 01K1971-10 | | |
| J106 | 6510007020 | CNR | TMP-J01X-V6 | | |
| J107 | 6510007020 | CNR | TMP-J01X-V6 | | |
| J108 | 6510007020 | CNR | TMP-J01X-V6 | | |
| J504 | 6510023750 | CNR | 01K1971-10 | | |
| J505 | 6510023750 | CNR | 01K1971-10 | | |
| J506 | 6510007020 | CNR | TMP-J01X-V6 | | |
| J601 | 6510007020 | CNR | TMP-J01X-V6 | | |
| J602 | 6510007020 | CNR | TMP-J01X-V6 | | |
| | | | | | |
| EP900 | 6910012350 | S.BEA | MMZ1608Y 102BT | B | 218.9/98.8 |
| EP901 | 6910012350 | S.BEA | MMZ1608Y 102BT | B | 204.2/100.3 |
| EP902 | 6910012350 | S.BEA | MMZ1608Y 102BT | B | 197.2/98.7 |
| EP903 | 6910012350 | S.BEA | MMZ1608Y 102BT | B | 189.7/100.1 |
| EP950 | 6910012350 | S.BEA | MMZ1608Y 102BT | B | 208.8/3.5 |
| EP951 | 6910012350 | S.BEA | MMZ1608Y 102BT | T | 205.4/3.2 |
| EP952 | 6910012350 | S.BEA | MMZ1608Y 102BT | B | 193.3/3 |
| EP953 | 6910012350 | S.BEA | MMZ1608Y 102BT | B | 184.6/3.8 |

## [MAIN UNIT]

| REF NO. | ORDER NO. | DESCRIPTION | | M. | H/V LOCATION |
|---|---|---|---|---|---|
| IC1 | 1110003870 | S.IC | NJM2058M-TE1 | T | 226/83.5 |
| IC2 | 1110001901 | S.IC | uPC4570G2-E1-A | T | 187/68.8 |
| IC3 | 1130005641 | S.IC | TC4W53F (TE12L,F) | T | 191.1/75.2 |
| IC4 | 1110006300 | S.IC | NJM2172V-TE1 | T | 186.6/85.7 |
| IC5 | 1130005641 | S.IC | TC4W53F (TE12L,F) | T | 184.3/75.2 |
| IC50 | 1190001930 | S.IC | PS7122AL-1A-E3 | B | 114.4/109.1 |
| IC60 | 1110003870 | S.IC | NJM2058M-TE1 | B | 116.1/87.4 |
| IC61 | 1110003870 | S.IC | NJM2058M-TE1 | B | 129.6/94.8 |
| IC100 | 1130005641 | S.IC | TC4W53F (TE12L,F) | T | 211.8/91 |
| IC101 | 1130005641 | S.IC | TC4W53F (TE12L,F) | T | 205/91 |
| IC102 | 1110001901 | S.IC | uPC4570G2-E1-A | T | 209.7/68.5 |
| IC104 | 1110001901 | S.IC | uPC4570G2-E1-A | T | 209.8/43.4 |
| IC105 | 1110006300 | S.IC | NJM2172V-TE1 | T | 220.4/58.4 |
| IC140 | 1110006141 | IC | LA4485-E | | |
| IC180 | 1110006300 | S.IC | NJM2172V-TE1 | T | 187/57.6 |
| IC181 | 1130005641 | S.IC | TC4W53F (TE12L,F) | T | 186.9/40.3 |
| IC182 | 1110006160 | S.IC | TPA6111A2DGN | T | 186.8/35.8 |
| IC191 | 1130005641 | S.IC | TC4W53F (TE12L,F) | T | 193.3/30 |
| IC192 | 1130005641 | S.IC | TC4W53F (TE12L,F) | T | 180.6/30.2 |
| IC201 | 1130005641 | S.IC | TC4W53F (TE12L,F) | T | 147.7/71.6 |
| IC210 | 1110006300 | S.IC | NJM2172V-TE1 | T | 160.5/90.1 |
| IC230 | 1110001901 | S.IC | uPC4570G2-E1-A | T | 68.3/22.2 |
| IC250 | 1130011530 | S.IC | CD74HC4094M96 | T | 137.4/32.2 |
| IC251 | 1160000131 | S.IC | TD62783AFG (S,EL) | T | 125.7/34 |
| IC260 | 1130011530 | S.IC | CD74HC4094M96 | T | 137.4/46.6 |
| IC261 | 1160000131 | S.IC | TD62783AFG (S,EL) | T | 125.7/48.3 |
| IC290 | 1130011530 | S.IC | CD74HC4094M96 | T | 149.4/35.6 |
| IC291 | 1160000131 | S.IC | TD62783AFG (S,EL) | T | 161.1/34 |
| IC310 | 1130011530 | S.IC | CD74HC4094M96 | T | 149.4/50.1 |
| IC311 | 1160000131 | S.IC | TD62783AFG (S,EL) | T | 161.1/48.4 |
| IC330 | 1130012000 | S.IC | M62352AGP C60Q | T | 150.4/61 |
| IC331 | 1130012000 | S.IC | M62352AGP C60Q | T | 161.1/61.1 |
| IC450 | 1180002650 | S.REG | SI-3012KS-TL | B | 212.6/31.3 |
| IC451 | 1180002650 | S.REG | SI-3012KS-TL | B | 160/15.2 |
| IC452 | 1180002650 | S.REG | SI-3012KS-TL | B | 93.6/51.5 |
| IC460 | 1130005641 | S.IC | TC4W53F (TE12L,F) | T | 147.7/80 |
| IC490 | 1130005641 | S.IC | TC4W53F (TE12L,F) | B | 163.4/61.6 |
| IC491 | 1110003870 | S.IC | NJM2058M-TE1 | B | 236.2/21.9 |
| IC495 | 1130011990 | S.IC | SN74LVC1G08DCKR | T | 14.6/122.5 |
| IC501 | 1110006100 | S.IC | NJM5534MD-TE1 | T | 22.6/66.4 |
| IC502 | 1110006100 | S.IC | NJM5534MD-TE1 | T | 22.6/78.5 |
| IC503 | 1110005461 | S.IC | TA4107F (TE12L,F) | T | 23.2/91.9 |
| IC550 | 1180001771 | S.IC | TA79L05F (TE12L,F) | T | 125.5/103.1 |
| IC820 | 1110006131 | S.IC | uPC4094G2-E1-A | T | 83.5/59.3 |
| IC821 | 1110006300 | S.IC | NJM2172V-TE1 | T | 160.5/74.8 |
| | | | | | |
| Q1 | 1590001050 | S.TR | DTC114TUA T106 | B | 217/105.3 |
| Q2 | 1590001050 | S.TR | DTC114TUA T106 | B | 174.9/102.8 |
| Q3 | 1530002060 | S.TR | 2SC4081 T106 R | B | 161.8/96.7 |
| Q4 | 1530002060 | S.TR | 2SC4081 T106 R | B | 172.7/98 |
| Q5 | 1590001330 | S.TR | DTA114EUA T106 | B | 167.1/92 |
| Q6 | 1540000441 | S.TR | 2SD1619T-TD-E | B | 166.4/102.1 |
| Q7 | 1530002060 | S.TR | 2SC4081 T106 R | B | 147.8/110.4 |
| Q8 | 1530002060 | S.TR | 2SC4081 T106 R | T | 222.2/99.7 |
| Q9 | 1530002060 | S.TR | 2SC4081 T106 R | T | 179.3/101 |
| Q50 | 1590001050 | S.TR | DTC114TUA T106 | B | 119/96.6 |
| Q51 | 1590001050 | S.TR | DTC114TUA T106 | B | 118.6/100.4 |
| Q52 | 1530002060 | S.TR | 2SC4081 T106 R | T | 83.5/107.6 |
| Q60 | 1590002710 | S.TR | UMH11NTN | T | 118.7/87.6 |
| Q61 | 1590002150 | S.TR | DTC144TE TL | T | 117.8/80.2 |
| Q62 | 1510000510 | S.TR | 2SA1576A T106R | T | 123.1/93.8 |
| Q63 | 1590001050 | S.TR | DTC114TUA T106 | T | 120.2/79.9 |
| Q64 | 1590002430 | S.TR | DTA144EE TL | T | 120.2/82.2 |
| Q100 | 1590001451 | S.FET | 2SJ144-GR (TE85R,F) | T | 214.2/79.1 |
| Q101 | 1590001451 | S.FET | 2SJ144-GR (TE85R,F) | T | 204.6/79.1 |
| Q131 | 1560001131 | S.FET | CPH3403-TL-E | T | 228.6/70.9 |
| Q132 | 1560001131 | S.FET | CPH3403-TL-E | T | 233.4/47.7 |
| Q140 | 1540000471 | S.TR | 2SD1801S-TL-E | T | 241.8/37.3 |
| Q141 | 1590000680 | S.TR | DTC114EUA T106 | B | 247.8/92.4 |
| Q142 | 1590000680 | S.TR | DTC114EUA T106 | B | 239.9/92.4 |
| Q143 | 1590001050 | S.TR | DTC114TUA T106 | T | 255.3/55.4 |
| Q351 | 1560001260 | S.FET | 2SK3018 T106 | T | 129.8/85.1 |
| Q352 | 1530002060 | S.TR | 2SC4081 T106 R | T | 132.7/85.1 |
| Q474 | 1510000510 | S.TR | 2SA1576A T106R | T | 132.4/77.2 |
| Q476 | 1590001050 | S.TR | DTC114TUA T106 | T | 129.4/77.1 |
| Q490 | 1590000680 | S.TR | DTC114EUA T106 | B | 232.2/4.5 |
| Q491 | 1520000460 | S.TR | 2SB1132 T100 R | B | 224.3/4.2 |
| Q501 | 1580000751 | S.FET | 3SK294 (TE85L,F) | B | 26.9/91.8 |
| Q502 | 1590000680 | S.TR | DTC114EUA T106 | T | 47.1/79.4 |
| Q503 | 1590002710 | S.TR | UMH11NTN | T | 47.3/75.9 |
| Q504 | 1560000561 | S.FET | 2SK882-GR (TE85L,F) | B | 49.3/91.2 |
| Q506 | 1560000561 | S.FET | 2SK882-GR (TE85L,F) | B | 102.7/82.6 |
| Q507 | 1530003151 | S.TR | 2SC4673D-TD-E | T | 103.9/65.5 |
| Q508 | 1530003841 | S.TR | 2SC5501-4-TR-E | T | 58.8/68.8 |
| Q801 | 1530003851 | S.TR | 2SC5551F-TD-E | T | 43.1/18.2 |
| Q802 | 1520000531 | S.TR | 2SB1119S-TD-E | B | 89.9/83.7 |
| Q803 | 1590000680 | S.TR | DTC114EUA T106 | B | 83.7/84.8 |
| Q804 | 1590002710 | S.TR | UMH11NTN | T | 33.9/20.3 |
| Q805 | 1590000680 | S.TR | DTC114EUA T106 | T | 30.9/21.6 |
| Q806 | 1530002060 | S.TR | 2SC4081 T106 R | T | 35.5/73.8 |
| Q808 | 1590001330 | S.TR | DTA114EUA T106 | T | 45.6/70.2 |
| Q809 | 1590000680 | S.TR | DTC114EUA T106 | T | 48.7/70.2 |
| Q810 | 1530002060 | S.TR | 2SC4081 T106 R | T | 231.4/34.2 |
| | | | | | |
| D1 | 1750000550 | S.DIO | 1SS355 TE-17 | B | 162.9/104.2 |
| D2 | 1750000550 | S.DIO | 1SS355 TE-17 | B | 170.6/104.2 |
| D3 | 1790001750 | S.DIO | DSM3MA4 | B | 65.5/122.7 |
| D4 | 1790001750 | S.DIO | DSM3MA4 | B | 65.5/113.6 |
| D50 | 1750000550 | S.DIO | 1SS355 TE-17 | B | 114.5/100.6 |
| D51 | 1790001670 | S.DIO | RB706F-40T106 | T | 90.8/112.8 |
| D52 | 1750000550 | S.DIO | 1SS355 TE-17 | T | 88.4/112.8 |
| D60 | 1750000550 | S.DIO | 1SS355 TE-17 | B | 126.8/86.8 |

M.=Mounted side (T: Mounted on the Top side, B: Mounted on the Bottom side)
S.=Surface mount

## [MAIN UNIT]

| REF NO. | ORDER NO. | DESCRIPTION | | M. | H/V LOCATION |
|---|---|---|---|---|---|
| D61 | 1750000550 | S.DIO | 1SS355 TE-17 | B | 126.6/83.4 |
| D62 | 1750000550 | S.DIO | 1SS355 TE-17 | B | 120.6/77.6 |
| D63 | 1750000550 | S.DIO | 1SS355 TE-17 | B | 116.5/93.6 |
| D64 | 1790001240 | S.DIO | MA2S728-(TX) | B | 108.1/78.3 |
| D65 | 1750000550 | S.DIO | 1SS355 TE-17 | B | 123.1/100.1 |
| D66 | 1750000550 | S.DIO | 1SS355 TE-17 | B | 134.3/89.4 |
| D67 | 1730002340 | S.ZEN | MA8047-M (TX) | B | 122.8/95.8 |
| D140 | 1750000550 | S.DIO | 1SS355 TE-17 | B | 247.8/95.1 |
| D141 | 1750000550 | S.DIO | 1SS355 TE-17 | B | 239.9/95.1 |
| D241 | 1730002280 | S.ZEN | MA8091-M (TX) | T | 231.2/32 |
| D351 | 1790001250 | S.DIO | MA2S111-(TX) | T | 129.7/83.2 |
| D450 | 1710000840 | S.DIO | 1SR154-400 TE25 | B | 218.9/28 |
| D451 | 1710000840 | S.DIO | 1SR154-400 TE25 | B | 153.4/16 |
| D452 | 1710000840 | S.DIO | 1SR154-400 TE25 | B | 93.6/58 |
| D490 | 1790000620 | S.DIO | MA77 (TX) | B | 237.5/5.4 |
| D501 | 1790000620 | S.DIO | MA77 (TX) | B | 34.3/94.1 |
| D502 | 1790000620 | S.DIO | MA77 (TX) | B | 34.3/91.8 |
| D503 | 1790000620 | S.DIO | MA77 (TX) | B | 46.6/91.4 |
| D504 | 1790000620 | S.DIO | MA77 (TX) | B | 46.7/85.3 |
| D505 | 1750000431 | S.DIO | HSB88WSTR-E | T | 70.2/90.8 |
| D506 | 1750000431 | S.DIO | HSB88WSTR-E | T | 84.3/69.4 |
| D601 | 1790000620 | S.DIO | MA77 (TX) | B | 34.7/54 |
| D602 | 1790000620 | S.DIO | MA77 (TX) | B | 34.7/33 |
| D603 | 1790000620 | S.DIO | MA77 (TX) | B | 45.5/54 |
| D604 | 1790000620 | S.DIO | MA77 (TX) | B | 45.5/33 |
| D605 | 1790000620 | S.DIO | MA77 (TX) | B | 56.3/54 |
| D606 | 1790000620 | S.DIO | MA77 (TX) | B | 56.3/33 |
| D607 | 1790000620 | S.DIO | MA77 (TX) | B | 67.1/54 |
| D608 | 1790000620 | S.DIO | MA77 (TX) | B | 67.1/33 |
| D609 | 1790000620 | S.DIO | MA77 (TX) | B | 78/54 |
| D610 | 1790000620 | S.DIO | MA77 (TX) | B | 78/33 |
| D611 | 1790000620 | S.DIO | MA77 (TX) | T | 40.8/54 |
| D612 | 1790000620 | S.DIO | MA77 (TX) | T | 40.8/33 |
| D613 | 1790000620 | S.DIO | MA77 (TX) | T | 48.7/54 |
| D614 | 1790000620 | S.DIO | MA77 (TX) | T | 49.8/33 |
| D615 | 1790000620 | S.DIO | MA77 (TX) | T | 58.9/54 |
| D616 | 1790000620 | S.DIO | MA77 (TX) | T | 58.8/33 |
| D617 | 1790000620 | S.DIO | MA77 (TX) | T | 67.8/54 |
| D618 | 1790000620 | S.DIO | MA77 (TX) | T | 67.8/33 |
| D619 | 1790000620 | S.DIO | MA77 (TX) | T | 76.8/54 |
| D620 | 1790000620 | S.DIO | MA77 (TX) | T | 76.8/33 |
| D801 | 1790000620 | S.DIO | MA77 (TX) | T | 36.5/29.9 |
| D802 | 1750000581 | S.DIO | 1SV307 (TPH3,F) | T | 34.7/29.9 |
| D806 | 1790000620 | S.DIO | MA77 (TX) | B | 84.2/76.6 |
| D820 | 1750000581 | S.DIO | 1SV307 (TPH3,F) | T | 86/33 |
| FI501 | 2020001070 | CER | CFWLA455KDFA-B0 (CFWS455D) | | |
| FI502 | 2020001510 | CER | CFWLA455KJFA-B0 (CFWS455IT) | | |
| FI503 | 2010002580 | S.FIL | FL-348 (64.455 MHz) | T | 93.4/90.8 |
| L1 | 6200003261 | S.COL | NLV32T-101J | B | 211.7/110.3 |
| L2 | 6200003261 | S.COL | NLV32T-101J | B | 222.2/110.3 |
| L3 | 6200003950 | S.COL | HF50ACC 322513-T | B | 204.7/110.3 |
| L4 | 6200003261 | S.COL | NLV32T-101J | T | 218.7/109.6 |
| L5 | 6200003261 | S.COL | NLV32T-101J | B | 225.7/110.3 |
| L6 | 6200003261 | S.COL | NLV32T-101J | B | 215.2/110.3 |
| L7 | 6200003950 | S.COL | HF50ACC 322513-T | T | 208.2/109.6 |
| L8 | 6200003261 | S.COL | NLV32T-101J | B | 200.4/110.3 |
| L9 | 6200003950 | S.COL | HF50ACC 322513-T | B | 193.4/110 |
| L10 | 6200003261 | S.COL | NLV32T-101J | B | 196.9/110.3 |
| L11 | 6200003261 | S.COL | NLV32T-101J | B | 169.7/110.3 |
| L12 | 6200003261 | S.COL | NLV32T-101J | B | 180.2/110.3 |
| L13 | 6200003950 | S.COL | HF50ACC 322513-T | B | 162.7/110.3 |
| L14 | 6200003261 | S.COL | NLV32T-101J | T | 176.7/109.7 |
| L15 | 6200003261 | S.COL | NLV32T-101J | B | 183.7/110.3 |
| L16 | 6200003261 | S.COL | NLV32T-101J | B | 173.2/110.3 |
| L17 | 6200003950 | S.COL | HF50ACC 322513-T | T | 166.2/109.2 |
| L18 | 6200003261 | S.COL | NLV32T-101J | B | 158.4/110.3 |
| L19 | 6200003950 | S.COL | HF50ACC 322513-T | B | 151.4/110 |
| L20 | 6200003261 | S.COL | NLV32T-101J | B | 154.9/110.3 |
| L21 | 6200003950 | S.COL | HF50ACC 322513-T | B | 211.7/124.6 |
| L22 | 6200003950 | S.COL | HF50ACC 322513-T | B | 169.7/124.5 |
| L31 | 6200003261 | S.COL | NLV32T-101J | B | 194.2/88.9 |
| L50 | 6200003261 | S.COL | NLV32T-101J | B | 139.6/122.6 |
| L51 | 6200003590 | S.COL | EXCCL3225U1 | B | 122.1/107.2 |
| L52 | 6200003261 | S.COL | NLV32T-101J | B | 77.2/122.3 |
| L53 | 6200003261 | S.COL | NLV32T-101J | B | 77.2/117.4 |
| L54 | 6200003261 | S.COL | NLV32T-101J | T | 85.8/112.8 |
| L55 | 6200003261 | S.COL | NLV32T-101J | B | 95.6/107.2 |
| L56 | 6200003590 | S.COL | EXCCL3225U1 | B | 63.9/107.4 |
| L80 | 6200009790 | S.COL | BLM31PG121SN1 | B | 53.4/118.4 |
| L140 | 6200003261 | S.COL | NLV32T-101J | T | 219.7/48.1 |
| L141 | 2040000490 | COL | EXC-ELDR25C | | |
| L142 | 2040000490 | COL | EXC-ELDR25C | | |
| L143 | 2040000490 | COL | EXC-ELDR25C | | |
| L180 | 6200003261 | S.COL | NLV32T-101J | T | 186.9/44.5 |
| L181 | 6200003261 | S.COL | NLV32T-101J | T | 181.2/40.1 |
| L201 | 6200003261 | S.COL | NLV32T-101J | T | 165/81.4 |
| L210 | 6200003261 | S.COL | NLV32T-101J | T | 156.1/85.2 |
| L250 | 6200003590 | S.COL | EXCCL3225U1 | T | 134.6/55.7 |
| L290 | 6200003590 | S.COL | EXCCL3225U1 | T | 152/28.2 |
| L330 | 6200001831 | S.COL | NLV32T-100J | B | 161.4/68.9 |
| L331 | 6200001831 | S.COL | NLV32T-100J | B | 164.8/68.9 |
| L340 | 6200003950 | S.COL | HF50ACC 322513-T | B | 201.7/96.1 |
| L341 | 6200003950 | S.COL | HF50ACC 322513-T | B | 195.5/96.1 |
| L360 | 6200003950 | S.COL | HF50ACC 322513-T | B | 149.7/96.1 |
| L361 | 6200003950 | S.COL | HF50ACC 322513-T | B | 143.5/96.1 |
| L380 | 6200003950 | S.COL | HF50ACC 322513-T | B | 28.5/41.9 |
| L381 | 6200003950 | S.COL | HF50ACC 322513-T | B | 28.5/48.1 |
| L400 | 6200003950 | S.COL | HF50ACC 322513-T | T | 238.3/10.9 |
| L401 | 6200003950 | S.COL | HF50ACC 322513-T | B | 234/11.2 |
| L402 | 6200003950 | S.COL | HF50ACC 322513-T | B | 237.3/11.2 |

## [MAIN UNIT]

| REF NO. | ORDER NO. | DESCRIPTION | | M. | H/V LOCATION |
|---|---|---|---|---|---|
| L405 | 6200003950 | S.COL | HF50ACC 322513-T | T | 40.3/11.3 |
| L406 | 6200003950 | S.COL | HF50ACC 322513-T | T | 34.3/11.3 |
| L407 | 6200003950 | S.COL | HF50ACC 322513-T | T | 37.3/11.3 |
| L410 | 6200003590 | S.COL | EXCCL3225U1 | T | 10.9/41 |
| L411 | 6200003950 | S.COL | HF50ACC 322513-T | B | 10.9/39.6 |
| L412 | 6200003590 | S.COL | EXCCL3225U1 | T | 10.9/38 |
| L413 | 6200003950 | S.COL | HF50ACC 322513-T | B | 10.9/36.4 |
| L418 | 6200003950 | S.COL | HF50ACC 322513-T | B | 11.1/97.2 |
| L435 | 6200003950 | S.COL | HF50ACC 322513-T | B | 6.7/76.7 |
| L440 | 6200003950 | S.COL | HF50ACC 322513-T | T | 164.1/12.7 |
| L441 | 6200003950 | S.COL | HF50ACC 322513-T | T | 161.1/12.7 |
| L450 | 6200003590 | S.COL | EXCCL3225U1 | B | 251.2/16.8 |
| L451 | 6170000150 | COL | LW-16 | | |
| L452 | 6200003590 | S.COL | EXCCL3225U1 | T | 250.2/25.4 |
| L453 | 6200003590 | S.COL | EXCCL3225U1 | T | 250.2/28.4 |
| L454 | 6200009790 | S.COL | BLM31PG121SN1 | B | 250.6/30.2 |
| L455 | 6200009790 | S.COL | BLM31PG121SN1 | B | 250.6/32.5 |
| L456 | 6200003590 | S.COL | EXCCL3225U1 | T | 250.4/39.6 |
| L480 | 6200003950 | S.COL | HF50ACC 322513-T | B | 220.6/24 |
| L481 | 6200003950 | S.COL | HF50ACC 322513-T | B | 149.8/17.1 |
| L482 | 6200003950 | S.COL | HF50ACC 322513-T | B | 94.1/61.2 |
| L495 | 6200003191 | S.COL | NLV32T-470J | B | 24.9/119.2 |
| L496 | 6200003191 | S.COL | NLV32T-470J | B | 9.8/119 |
| L501 | 6200003261 | S.COL | NLV32T-101J | T | 24.4/101.3 |
| L502 | 6200003261 | S.COL | NLV32T-101J | T | 21.4/97.1 |
| L503 | 6200003261 | S.COL | NLV32T-101J | T | 24.4/97.1 |
| L504 | 6200003520 | S.COL | ELJFB 102K-F | T | 30.6/92.2 |
| L505 | 6150004090 | COL | LS-469 (C-13969) | | |
| L507 | 6140003530 | COL | LR-395 | | |
| L508 | 6140003210 | S.COL | LR-358 | T | 75.9/90.8 |
| L509 | 6140003770 | S.COL | LR-414 4KBL (STP-01435) | T | 85.2/90.8 |
| L510 | 6140003770 | S.COL | LR-414 4KBL (STP-01435) | T | 101.6/90.8 |
| L511 | 6200003031 | S.COL | NLV32T-R47J | B | 101.9/85.8 |
| L512 | 6150004280 | COL | LS-484B (C-14927) | | |
| L513 | 6140002551 | S.COL | #617DB-1919=P3 | T | 90.6/69.4 |
| L514 | 6140002551 | S.COL | #617DB-1919=P3 | T | 78/69.4 |
| L515 | 6200003001 | S.COL | NLV32T-R22J | T | 111.3/65.7 |
| L516 | 6200003021 | S.COL | NLV32T-R33J | T | 102.8/71.4 |
| L517 | 6200001831 | S.COL | NLV32T-100J | T | 99.4/73.5 |
| L518 | 6200010720 | S.COL | C2520C-56NG-A | T | 71.2/69.1 |
| L519 | 6200010860 | S.COL | C2520C-R10G-A (0.1U) | T | 67.6/70.3 |
| L521 | 6140003900 | COL | LR-489 | | |
| L522 | 6140003890 | COL | LR-488 | | |
| L523 | 6200010381 | S.COL | ELJRE R15JFA | B | 90.6/76.8 |
| L524 | 6180002971 | S.COL | NLV32T-068J | B | 102.6/63.5 |
| L525 | 6180002971 | S.COL | NLV32T-068J | B | 100.7/67.3 |
| L526 | 6180002971 | S.COL | NLV32T-068J | B | 97/67.2 |
| L527 | 6200010660 | S.COL | C2520C-R15G-A (0.15U) | T | 64/71.6 |
| L528 | 6200003261 | S.COL | NLV32T-101J | T | 33.6/96.3 |
| L529 | 6200010381 | S.COL | ELJRE R15JFA | B | 93.2/78.1 |
| L601 | 6200003101 | S.COL | NLV32T-3R9J | B | 38.2/53.1 |
| L602 | 6200003131 | S.COL | NLV32T-120J | B | 34.7/49.6 |
| L603 | 6200003131 | S.COL | NLV32T-120J | B | 38.9/43.2 |
| L604 | 6200003131 | S.COL | NLV32T-120J | B | 34.7/37.4 |
| L605 | 6200003101 | S.COL | NLV32T-3R9J | B | 38.2/33.8 |
| L606 | 6200002961 | S.COL | NLV32T-4R7J | B | 49/53.1 |
| L607 | 6200001851 | S.COL | NLV32T-5R6J | B | 45.5/49.6 |
| L608 | 6200001851 | S.COL | NLV32T-5R6J | B | 49.7/43.5 |
| L609 | 6200001851 | S.COL | NLV32T-5R6J | B | 45.5/37.4 |
| L610 | 6200002961 | S.COL | NLV32T-4R7J | B | 49/33.8 |
| L611 | 6200002991 | S.COL | NLV32T-2R2J | B | 59.8/53.1 |
| L612 | 6200003111 | S.COL | NLV32T-6R8J | B | 56.3/49.6 |
| L613 | 6200003111 | S.COL | NLV32T-6R8J | B | 60.5/43.5 |
| L614 | 6200003111 | S.COL | NLV32T-6R8J | B | 56.3/37.4 |
| L615 | 6200002991 | S.COL | NLV32T-2R2J | B | 59.8/33.8 |
| L616 | 6200002991 | S.COL | NLV32T-2R2J | B | 70.7/53.1 |
| L617 | 6200003321 | S.COL | NLV32T-3R3J | B | 67.1/49.6 |
| L618 | 6200003321 | S.COL | NLV32T-3R3J | B | 71.3/43.5 |
| L619 | 6200003321 | S.COL | NLV32T-3R3J | B | 67.1/37.4 |
| L620 | 6200002991 | S.COL | NLV32T-2R2J | B | 70.6/33.8 |
| L621 | 6200003061 | S.COL | NLV32T-1R2J | B | 81.5/53.1 |
| L622 | 6200003091 | S.COL | NLV32T-2R7J | B | 78/49.6 |
| L623 | 6200003091 | S.COL | NLV32T-2R7J | B | 82.2/43.5 |
| L624 | 6200003091 | S.COL | NLV32T-2R7J | B | 78/37.4 |
| L625 | 6200003061 | S.COL | NLV32T-1R2J | B | 81.5/33.8 |
| L626 | 6200003331 | S.COL | NLV32T-1R0J | T | 37.8/50 |
| L627 | 6200003081 | S.COL | NLV32T-1R8J | T | 40.8/50 |
| L628 | 6200003081 | S.COL | NLV32T-1R8J | T | 40.2/43.5 |
| L629 | 6200003081 | S.COL | NLV32T-1R8J | T | 40.8/36.9 |
| L630 | 6200003331 | S.COL | NLV32T-1R0J | T | 37.8/36.9 |
| L631 | 6200003041 | S.COL | NLV32T-R68J | T | 46.8/50 |
| L632 | 6200003071 | S.COL | NLV32T-1R5J | T | 49.8/50 |
| L633 | 6200003071 | S.COL | NLV32T-1R5J | T | 49.2/43.5 |
| L634 | 6200003071 | S.COL | NLV32T-1R5J | T | 49.8/36.9 |
| L635 | 6200003041 | S.COL | NLV32T-R68J | T | 46.8/36.9 |
| L636 | 6200002981 | S.COL | NLV32T-R56J | T | 55.8/50 |
| L637 | 6200003051 | S.COL | NLV32T-R82J | T | 58.9/50 |
| L638 | 6200003051 | S.COL | NLV32T-R82J | T | 58.2/43.5 |
| L639 | 6200003051 | S.COL | NLV32T-R82J | T | 58.8/36.9 |
| L640 | 6200002981 | S.COL | NLV32T-R56J | T | 55.8/36.9 |
| L641 | 6200003021 | S.COL | NLV32T-R33J | T | 64.8/50 |
| L642 | 6200003041 | S.COL | NLV32T-R68J | T | 67.8/50 |
| L643 | 6200003041 | S.COL | NLV32T-R68J | T | 67.2/43.5 |
| L644 | 6200003041 | S.COL | NLV32T-R68J | T | 67.8/36.9 |
| L645 | 6200003021 | S.COL | NLV32T-R33J | T | 64.8/36.9 |
| L646 | 6200005491 | S.COL | NLV32T-331J | T | 79.8/50 |
| L647 | 6200007810 | S.COL | LQH31HN95NK03L | T | 73.2/51.3 |
| L648 | 6200009810 | S.COL | LQH31HNR61J03L | T | 76.8/50 |
| L649 | 6200009810 | S.COL | LQH31HNR61J03L | T | 75.5/43.7 |
| L650 | 6200009810 | S.COL | LQH31HNR61J03L | T | 76.8/36.9 |
| L651 | 6200007810 | S.COL | LQH31HN95NK03L | T | 73.2/35.5 |
| L801 | 6200005491 | S.COL | NLV32T-331J | T | 37.2/23.4 |
| L802 | 6200003261 | S.COL | NLV32T-101J | B | 37.2/23.8 |
| L803 | 6140003970 | COL | LR-494 | | |

M.=Mounted side (T: Mounted on the Top side, B: Mounted on the Bottom side)
S.=Surface mount

## [MAIN UNIT]

| REF NO. | ORDER NO. | DESCRIPTION | | M. | H/V LOCATION |
|---|---|---|---|---|---|
| L804 | 6200003241 | S.COL | NLV32T-221J | B | 49.2/26 |
| L820 | 6200003161 | S.COL | NLV32T-270J | T | 86.6/48.4 |
| L821 | 6200003191 | S.COL | NLV32T-470J | T | 85.8/44.9 |
| L822 | 6200003201 | S.COL | NLV32T-560J | T | 86.6/39.8 |
| R1 | 7030003550 | S.RES | ERJ3GEYJ 822 V (8.2 k) | B | 214.8/107.3 |
| R2 | 7030003550 | S.RES | ERJ3GEYJ 822 V (8.2 k) | B | 174.1/104.9 |
| R3 | 7030003520 | S.RES | ERJ3GEYJ 472 V (4.7 k) | B | 161.1/103.9 |
| R4 | 7030003620 | S.RES | ERJ3GEYJ 333 V (33 k) | B | 161.1/101.1 |
| R5 | 7030003580 | S.RES | ERJ3GEYJ 153 V (15 k) | B | 161.9/99.1 |
| R6 | 7030003520 | S.RES | ERJ3GEYJ 472 V (4.7 k) | B | 161.8/93.8 |
| R7 | 7030003520 | S.RES | ERJ3GEYJ 472 V (4.7 k) | B | 172.2/104.2 |
| R8 | 7030003620 | S.RES | ERJ3GEYJ 333 V (33 k) | B | 170.6/101.2 |
| R9 | 7030003580 | S.RES | ERJ3GEYJ 153 V (15 k) | B | 172.8/100.4 |
| R10 | 7030003520 | S.RES | ERJ3GEYJ 472 V (4.7 k) | B | 172.7/95.1 |
| R11 | 7030009891 | S.RES | ERA3YED 151V (150) | B | 167.1/94.5 |
| R12 | 7030003560 | S.RES | ERJ3GEYJ 103 V (10 k) | B | 167.1/96.3 |
| R13 | 7030003480 | S.RES | ERJ3GEYJ 222 V (2.2 k) | B | 148.7/106.9 |
| R14 | 7030003560 | S.RES | ERJ3GEYJ 103 V (10 k) | B | 146.9/106.9 |
| R15 | 7030003640 | S.RES | ERJ3GEYJ 473 V (47 k) | B | 145.1/110.4 |
| R16 | 7030003680 | S.RES | ERJ3GEYJ 104 V (100 k) | T | 224.8/77.8 |
| R17 | 7030003680 | S.RES | ERJ3GEYJ 104 V (100 k) | T | 223.4/77.8 |
| R18 | 7030003400 | S.RES | ERJ3GEYJ 471 V (470) | T | 222.1/77.8 |
| R19 | 7030003680 | S.RES | ERJ3GEYJ 104 V (100 k) | T | 227.2/77.8 |
| R20 | 7030003680 | S.RES | ERJ3GEYJ 104 V (100 k) | T | 228.6/77.8 |
| R21 | 7030003400 | S.RES | ERJ3GEYJ 471 V (470) | T | 230/77.8 |
| R22 | 7030003560 | S.RES | ERJ3GEYJ 103 V (10 k) | T | 180.8/69.6 |
| R23 | 7030003560 | S.RES | ERJ3GEYJ 103 V (10 k) | T | 181.6/67.8 |
| R24 | 7030003660 | S.RES | ERJ3GEYJ 683 V (68 k) | T | 182.3/69.7 |
| R25 | 7030003440 | S.RES | ERJ3GEYJ 102 V (1 k) | T | 181.6/71.6 |
| R26 | 7030003560 | S.RES | ERJ3GEYJ 103 V (10 k) | T | 193.3/69.7 |
| R27 | 7030003560 | S.RES | ERJ3GEYJ 103 V (10 k) | T | 192.5/67.8 |
| R28 | 7030003660 | S.RES | ERJ3GEYJ 683 V (68 k) | T | 191.8/69.7 |
| R29 | 7030003440 | S.RES | ERJ3GEYJ 102 V (1 k) | T | 192.5/71.6 |
| R30 | 7030003320 | S.RES | ERJ3GEYJ 101 V (100) | T | 192.5/66.5 |
| R31 | 7030003560 | S.RES | ERJ3GEYJ 103 V (10 k) | T | 192.9/88 |
| R32 | 7030003560 | S.RES | ERJ3GEYJ 103 V (10 k) | T | 192.9/86.7 |
| R33 | 7030003560 | S.RES | ERJ3GEYJ 103 V (10 k) | B | 188.8/83.7 |
| R34 | 7030003440 | S.RES | ERJ3GEYJ 102 V (1 k) | T | 222.3/96.5 |
| R35 | 7030003580 | S.RES | ERJ3GEYJ 153 V (15 k) | T | 222.3/97.8 |
| R36 | 7030003580 | S.RES | ERJ3GEYJ 153 V (15 k) | T | 225.1/99 |
| R37 | 7030003320 | S.RES | ERJ3GEYJ 101 V (100) | T | 219.7/97.8 |
| R38 | 7030003390 | S.RES | ERJ3GEYJ 391 V (390) | T | 225.1/100.3 |
| R39 | 7030003440 | S.RES | ERJ3GEYJ 102 V (1 k) | T | 179.3/97.8 |
| R40 | 7030003580 | S.RES | ERJ3GEYJ 153 V (15 k) | T | 179.3/99.1 |
| R41 | 7030003580 | S.RES | ERJ3GEYJ 153 V (15 k) | T | 182.3/100.3 |
| R42 | 7030003320 | S.RES | ERJ3GEYJ 101 V (100) | T | 176.5/99.1 |
| R43 | 7030003390 | S.RES | ERJ3GEYJ 391 V (390) | T | 182.3/101.6 |
| R44 | 7030003320 | S.RES | ERJ3GEYJ 101 V (100) | T | 181.6/66.5 |
| R45 | 7030003620 | S.RES | ERJ3GEYJ 333 V (33 k) | T | 192.9/85.4 |
| R46 | 7030003620 | S.RES | ERJ3GEYJ 333 V (33 k) | T | 192.9/89.3 |
| R47 | 7030003560 | S.RES | ERJ3GEYJ 103 V (10 k) | B | 185.5/83.7 |
| R49 | 7540000270 | S.ASB | ERZVF2M201 | B | 110.1/123.5 |
| R50 | 7310003820 | TRI | EVN-D2AA03 B14 | | |
| R51 | 7030003560 | S.RES | ERJ3GEYJ 103 V (10 k) | B | 152/123.2 |
| R52 | 7030003200 | S.RES | ERJ3GEYJ 100 V (10) | B | 109.6/98.6 |
| R53 | 7030003390 | S.RES | ERJ3GEYJ 391 V (390) | B | 118.6/102.4 |
| R54 | 7030003480 | S.RES | ERJ3GEYJ 222 V (2.2 k) | T | 89.9/109.6 |
| R55 | 7030003480 | S.RES | ERJ3GEYJ 222 V (2.2 k) | T | 91.3/109.6 |
| R56 | 7030003520 | S.RES | ERJ3GEYJ 472 V (4.7 k) | T | 88.4/109.6 |
| R57 | 7030003620 | S.RES | ERJ3GEYJ 333 V (33 k) | T | 86.1/109.9 |
| R58 | 7030003580 | S.RES | ERJ3GEYJ 153 V (15 k) | T | 83.5/109.9 |
| R59 | 7030003520 | S.RES | ERJ3GEYJ 472 V (4.7 k) | T | 85.4/107.6 |
| R60 | 7510001511 | S.TMR | NTCG16 4LH 223JT | B | 125/86.8 |
| R61 | 7030003660 | S.RES | ERJ3GEYJ 683 V (68 k) | B | 123.2/86.8 |
| R62 | 7030003480 | S.RES | ERJ3GEYJ 222 V (2.2 k) | B | 121.4/86.8 |
| R63 | 7030003680 | S.RES | ERJ3GEYJ 104 V (100 k) | B | 124/82.5 |
| R64 | 7030003560 | S.RES | ERJ3GEYJ 103 V (10 k) | B | 124/84.3 |
| R65 | 7030003720 | S.RES | ERJ3GEYJ 224 V (220 k) | B | 121.4/83.5 |
| R66 | 7030003320 | S.RES | ERJ3GEYJ 101 V (100) | B | 121.4/80.2 |
| R67 | 7030005681 | S.RES | ERA3YKD 473V (47 k) | B | 105.3/90.5 |
| R68 | 7030008121 | S.RES | ERA3YED 682V (6.8 k) | B | 110/87.9 |
| R69 | 7310005530 | S.TRI | TMC3ADCS2X (470) | T | 108.9/90 |
| R70 | 7030008121 | S.RES | ERA3YED 682V (6.8 k) | B | 108.9/90.5 |
| R71 | 7030005681 | S.RES | ERA3YKD 473V (47 k) | B | 107.1/90.5 |
| R72 | 7030003740 | S.RES | ERJ3GEYJ 334 V (330 k) | B | 110.7/90.5 |
| R73 | 7030003520 | S.RES | ERJ3GEYJ 472 V (4.7 k) | T | 109/78 |
| R74 | 7030003720 | S.RES | ERJ3GEYJ 224 V (220 k) | B | 121.4/91.9 |
| R75 | 7030003600 | S.RES | ERJ3GEYJ 223 V (22 k) | T | 108/86.3 |
| R76 | 7030003620 | S.RES | ERJ3GEYJ 333 V (33 k) | T | 110.6/86.3 |
| R77 | 7030003720 | S.RES | ERJ3GEYJ 224 V (220 k) | B | 110.7/85.6 |
| R78 | 7030003680 | S.RES | ERJ3GEYJ 104 V (100 k) | T | 118/90.4 |
| R79 | 7310005590 | S.TRI | TMC3ADCJ5X (220 k) | T | 114.5/90 |
| R80 | 7030003680 | S.RES | ERJ3GEYJ 104 V (100 k) | T | 118.7/84.6 |
| R81 | 7310005590 | S.TRI | TMC3ADCJ5X (220 k) | T | 114.5/85.1 |
| R82 | 7310005570 | S.TRI | TMC3ADC15X (100 k) | T | 114.5/80.2 |
| R83 | 7030003680 | S.RES | ERJ3GEYJ 104 V (100 k) | B | 116.6/79.2 |
| R84 | 7030003720 | S.RES | ERJ3GEYJ 224 V (220 k) | B | 116.6/81 |
| R85 | 7030009920 | S.RES | ERJ3GEYJ 335 V (3.3 M) | B | 113.3/81 |
| R86 | 7030003380 | S.RES | ERJ3GEYJ 331 V (330) | B | 110.7/80.2 |
| R87 | 7030003320 | S.RES | ERJ3GEYJ 101 V (100) | T | 116.1/77.8 |
| R88 | 7030003440 | S.RES | ERJ3GEYJ 102 V (1 k) | T | 123/95.8 |
| R89 | 7030003440 | S.RES | ERJ3GEYJ 102 V (1 k) | T | 125.6/93.2 |
| R90 | 7030003800 | S.RES | ERJ3GEYJ 105 V (1 M) | B | 129.6/85.8 |
| R91 | 7030003660 | S.RES | ERJ3GEYJ 683 V (68 k) | B | 129.6/88.6 |
| R92 | 7030003380 | S.RES | ERJ3GEYJ 331 V (330) | B | 119.5/93.4 |
| R93 | 7310005580 | S.TRI | TMC3ADCS3X (4.7 k) | T | 108.9/80.4 |
| R94 | 7030003320 | S.RES | ERJ3GEYJ 101 V (100) | B | 136.8/95 |
| R95 | 7030003840 | S.RES | ERJ3GEYJ 225 V (2.2 M) | B | 129.7/100.1 |
| R96 | 7030009920 | S.RES | ERJ3GEYJ 335 V (3.3 M) | B | 126.4/103.7 |
| R97 | 7030011040 | S.RES | ERJ3GEYJ 685 V (6.8 M) | B | 126.4/100.1 |
| R98 | 7030003320 | S.RES | ERJ3GEYJ 101 V (100) | T | 122.8/90.8 |
| R99 | 7030000380 | S.RES | MCR10EZHJ 1 k | B | 126.2/89.4 |

## [MAIN UNIT]

| REF NO. | ORDER NO. | DESCRIPTION | | M. | H/V LOCATION |
|---|---|---|---|---|---|
| R100 | 7030003440 | S.RES | ERJ3GEYJ 102 V (1 k) | T | 216.4/79.1 |
| R101 | 7030003520 | S.RES | ERJ3GEYJ 472 V (4.7 k) | T | 210.7/79.1 |
| R102 | 7030003680 | S.RES | ERJ3GEYJ 104 V (100 k) | T | 212/79.1 |
| R103 | 7030003560 | S.RES | ERJ3GEYJ 103 V (10 k) | T | 215.7/77 |
| R104 | 7030003560 | S.RES | ERJ3GEYJ 103 V (10 k) | T | 214.3/70 |
| R105 | 7030003440 | S.RES | ERJ3GEYJ 102 V (1 k) | T | 206.8/79.1 |
| R106 | 7030003520 | S.RES | ERJ3GEYJ 472 V (4.7 k) | T | 201.1/79.1 |
| R107 | 7030003680 | S.RES | ERJ3GEYJ 104 V (100 k) | T | 202.4/79.1 |
| R108 | 7030003560 | S.RES | ERJ3GEYJ 103 V (10 k) | T | 206.1/77 |
| R109 | 7030003560 | S.RES | ERJ3GEYJ 103 V (10 k) | T | 205.1/70 |
| R110 | 7030003560 | S.RES | ERJ3GEYJ 103 V (10 k) | T | 216.5/91 |
| R111 | 7030003560 | S.RES | ERJ3GEYJ 103 V (10 k) | T | 215.2/91 |
| R113 | 7030003440 | S.RES | ERJ3GEYJ 102 V (1 k) | T | 215.6/70 |
| R114 | 7030003560 | S.RES | ERJ3GEYJ 103 V (10 k) | T | 214.3/67.3 |
| R115 | 7030003440 | S.RES | ERJ3GEYJ 102 V (1 k) | T | 203.8/70 |
| R116 | 7030003560 | S.RES | ERJ3GEYJ 103 V (10 k) | T | 205.1/67.3 |
| R117 | 7030003620 | S.RES | ERJ3GEYJ 333 V (33 k) | T | 124.7/75 |
| R118 | 7030003680 | S.RES | ERJ3GEYJ 104 V (100 k) | T | 126/75 |
| R119 | 7030003560 | S.RES | ERJ3GEYJ 103 V (10 k) | B | 217/60.1 |
| R120 | 7030003560 | S.RES | ERJ3GEYJ 103 V (10 k) | B | 217/56.7 |
| R123 | 7030003520 | S.RES | ERJ3GEYJ 472 V (4.7 k) | T | 214.5/46.3 |
| R124 | 7030003520 | S.RES | ERJ3GEYJ 472 V (4.7 k) | T | 205.3/47.2 |
| R125 | 7030003320 | S.RES | ERJ3GEYJ 101 V (100) | T | 213.6/48.8 |
| R126 | 7030003470 | S.RES | ERJ3GEYJ 182 V (1.8 k) | T | 167.3/61.4 |
| R127 | 7030003470 | S.RES | ERJ3GEYJ 182 V (1.8 k) | T | 167.3/62.8 |
| R128 | 7030003470 | S.RES | ERJ3GEYJ 182 V (1.8 k) | T | 167.3/64.1 |
| R129 | 7030003470 | S.RES | ERJ3GEYJ 182 V (1.8 k) | T | 167.3/65.4 |
| R130 | 7030003480 | S.RES | ERJ3GEYJ 222 V (2.2 k) | B | 219.7/57.7 |
| R131 | 7030003480 | S.RES | ERJ3GEYJ 222 V (2.2 k) | B | 219.6/59.2 |
| R132 | 7030000380 | S.RES | MCR10EZHJ 1 k | B | 123.4/92.5 |
| R133 | 7030003520 | S.RES | ERJ3GEYJ 472 V (4.7 k) | T | 230.6/61.6 |
| R134 | 7030003440 | S.RES | ERJ3GEYJ 102 V (1 k) | T | 232.2/65.3 |
| R135 | 7030003520 | S.RES | ERJ3GEYJ 472 V (4.7 k) | T | 232/53 |
| R136 | 7030003440 | S.RES | ERJ3GEYJ 102 V (1 k) | T | 232/51.7 |
| R137 | 7030003480 | S.RES | ERJ3GEYJ 222 V (2.2 k) | T | 232.2/64 |
| R138 | 7030003320 | S.RES | ERJ3GEYJ 101 V (100) | B | 204.5/64.9 |
| R139 | 7030003560 | S.RES | ERJ3GEYJ 103 V (10 k) | T | 226.2/71 |
| R140 | 7030003560 | S.RES | ERJ3GEYJ 103 V (10 k) | T | 230.4/46.7 |
| R141 | 7030003560 | S.RES | ERJ3GEYJ 103 V (10 k) | B | 256.3/59.4 |
| R142 | 7030003640 | S.RES | ERJ3GEYJ 473 V (47 k) | B | 254.5/59.4 |
| R143 | 7030004040 | S.RES | ERJ3GEYJ 4R7 V (4.7) | B | 252.4/98.6 |
| R144 | 7030004040 | S.RES | ERJ3GEYJ 4R7 V (4.7) | B | 244.1/109.8 |
| R145 | 7030003440 | S.RES | ERJ3GEYJ 102 V (1 k) | T | 234.8/76.9 |
| R146 | 7510001511 | S.TMR | NTCG16 4LH 223JT | T | 232.2/76.9 |
| R147 | 7030003750 | S.RES | ERJ3GEYJ 394 V (390 k) | T | 233.7/75.6 |
| R149 | 7030003360 | S.RES | ERJ3GEYJ 221 V (220) | B | 252.2/92.4 |
| R150 | 7030003360 | S.RES | ERJ3GEYJ 221 V (220) | B | 243.8/92.4 |
| R151 | 7030003410 | S.RES | ERJ3GEYJ 561 V (560) | T | 243.8/33.1 |
| R152 | 7030003320 | S.RES | ERJ3GEYJ 101 V (100) | B | 215.1/71.9 |
| R154 | 7030003320 | S.RES | ERJ3GEYJ 101 V (100) | T | 206.3/37.3 |
| R155 | 7030003640 | S.RES | ERJ3GEYJ 473 V (47 k) | T | 215.3/42.8 |
| R156 | 7030003640 | S.RES | ERJ3GEYJ 473 V (47 k) | T | 204.5/39.8 |
| R157 | 7030003480 | S.RES | ERJ3GEYJ 222 V (2.2 k) | T | 214.9/82.1 |
| R158 | 7030003480 | S.RES | ERJ3GEYJ 222 V (2.2 k) | T | 206/82.6 |
| R159 | 7030003440 | S.RES | ERJ3GEYJ 102 V (1 k) | T | 214.3/64.6 |
| R160 | 7030003440 | S.RES | ERJ3GEYJ 102 V (1 k) | T | 226.7/92.1 |
| R161 | 7030003480 | S.RES | ERJ3GEYJ 222 V (2.2 k) | T | 228/92.1 |
| R162 | 7030003680 | S.RES | ERJ3GEYJ 104 V (100 k) | T | 226.7/89.3 |
| R163 | 7030003570 | S.RES | ERJ3GEYJ 123 V (12 k) | T | 228/89.3 |
| R164 | 7030003680 | S.RES | ERJ3GEYJ 104 V (100 k) | T | 229.3/89.3 |
| R165 | 7030003680 | S.RES | ERJ3GEYJ 104 V (100 k) | T | 230.6/89.3 |
| R166 | 7030003400 | S.RES | ERJ3GEYJ 471 V (470) | T | 231.9/89.3 |
| R167 | 7030003440 | S.RES | ERJ3GEYJ 102 V (1 k) | T | 225.4/92.1 |
| R168 | 7030003480 | S.RES | ERJ3GEYJ 222 V (2.2 k) | T | 224.1/92.1 |
| R169 | 7030003680 | S.RES | ERJ3GEYJ 104 V (100 k) | T | 225.4/89.3 |
| R170 | 7030003570 | S.RES | ERJ3GEYJ 123 V (12 k) | T | 224.1/89.3 |
| R171 | 7030003680 | S.RES | ERJ3GEYJ 104 V (100 k) | T | 222.8/89.3 |
| R172 | 7030003680 | S.RES | ERJ3GEYJ 104 V (100 k) | T | 221.5/89.3 |
| R173 | 7030003400 | S.RES | ERJ3GEYJ 471 V (470) | T | 220.2/89.3 |
| R174 | 7030003440 | S.RES | ERJ3GEYJ 102 V (1 k) | T | 205.1/64.5 |
| R175 | 7030003860 | S.RES | ERJ3GE JPW V | B | 192.6/39.4 |
| R176 | 7030003450 | S.RES | ERJ3GEYJ 122 V (1.2 k) | T | 107.8/82.8 |
| R180 | 7030003560 | S.RES | ERJ3GEYJ 103 V (10 k) | B | 190.2/57 |
| R181 | 7030003560 | S.RES | ERJ3GEYJ 103 V (10 k) | B | 191.8/57 |
| R183 | 7030003470 | S.RES | ERJ3GEYJ 182 V (1.8 k) | T | 167.3/60.1 |
| R184 | 7030003470 | S.RES | ERJ3GEYJ 182 V (1.8 k) | T | 167.3/58.8 |
| R185 | 7030003470 | S.RES | ERJ3GEYJ 182 V (1.8 k) | T | 167.3/57.5 |
| R186 | 7030003470 | S.RES | ERJ3GEYJ 182 V (1.8 k) | T | 167.3/56.2 |
| R187 | 7030003480 | S.RES | ERJ3GEYJ 222 V (2.2 k) | T | 180.9/57.8 |
| R188 | 7030003480 | S.RES | ERJ3GEYJ 222 V (2.2 k) | T | 180.9/56.5 |
| R189 | 7030003560 | S.RES | ERJ3GEYJ 103 V (10 k) | B | 188.9/43.4 |
| R190 | 7030003560 | S.RES | ERJ3GEYJ 103 V (10 k) | B | 188.9/40.6 |
| R191 | 7030003440 | S.RES | ERJ3GEYJ 102 V (1 k) | T | 194.1/35.6 |
| R192 | 7030003610 | S.RES | ERJ3GEYJ 273 V (27 k) | T | 192/34.9 |
| R193 | 7030003440 | S.RES | ERJ3GEYJ 102 V (1 k) | T | 178.3/41.3 |
| R194 | 7030003610 | S.RES | ERJ3GEYJ 273 V (27 k) | T | 181.7/35.4 |
| R195 | 7030003440 | S.RES | ERJ3GEYJ 102 V (1 k) | T | 191.3/44.8 |
| R196 | 7030003440 | S.RES | ERJ3GEYJ 102 V (1 k) | T | 183.4/48 |
| R197 | 7030003320 | S.RES | ERJ3GEYJ 101 V (100) | T | 125.6/94.5 |
| R198 | 7030003640 | S.RES | ERJ3GEYJ 473 V (47 k) | T | 120.2/90.8 |
| R199 | 7030003520 | S.RES | ERJ3GEYJ 472 V (4.7 k) | T | 121.7/89 |
| R200 | 7030003560 | S.RES | ERJ3GEYJ 103 V (10 k) | B | 166.9/76.4 |
| R201 | 7030003560 | S.RES | ERJ3GEYJ 103 V (10 k) | T | 161.2/71.4 |
| R202 | 7030003520 | S.RES | ERJ3GEYJ 472 V (4.7 k) | T | 167.5/72.8 |
| R203 | 7030003720 | S.RES | ERJ3GEYJ 224 V (220 k) | T | 166.2/73.5 |
| R204 | 7030003320 | S.RES | ERJ3GEYJ 101 V (100) | T | 142.2/67.8 |
| R205 | 7030003320 | S.RES | ERJ3GEYJ 101 V (100) | B | 148.2/70 |
| R208 | 7030003440 | S.RES | ERJ3GEYJ 102 V (1 k) | T | 147.2/75.8 |
| R211 | 7030003560 | S.RES | ERJ3GEYJ 103 V (10 k) | T | 162.7/93.7 |
| R212 | 7030003520 | S.RES | ERJ3GEYJ 472 V (4.7 k) | T | 165.1/91.5 |
| R213 | 7030003440 | S.RES | ERJ3GEYJ 102 V (1 k) | T | 165.1/94.1 |
| R214 | 7030003600 | S.RES | ERJ3GEYJ 223 V (22 k) | B | 152.9/84.5 |
| R216 | 7030003620 | S.RES | ERJ3GEYJ 333 V (33 k) | B | 152.9/82.7 |
| R218 | 7030003580 | S.RES | ERJ3GEYJ 153 V (15 k) | T | 138.3/85.3 |

M.=Mounted side (T: Mounted on the Top side, B: Mounted on the Bottom side)
S.=Surface mount

## [MAIN UNIT]

| REF NO. | ORDER NO. | DESCRIPTION | M. | H/V LOCATION |
|---|---|---|---|---|
| R221 | 7030003560 | S.RES ERJ3GEYJ 103 V (10 k) | T | 158.5/93.7 |
| R222 | 7030003520 | S.RES ERJ3GEYJ 472 V (4.7 k) | T | 155.9/91.5 |
| R223 | 7030003440 | S.RES ERJ3GEYJ 102 V (1 k) | T | 155.9/94.1 |
| R224 | 7030003600 | S.RES ERJ3GEYJ 223 V (22 k) | B | 152.9/89.3 |
| R226 | 7030003620 | S.RES ERJ3GEYJ 333 V (33 k) | B | 152.9/87.5 |
| R228 | 7030003580 | S.RES ERJ3GEYJ 153 V (15 k) | T | 138.3/90.2 |
| R230 | 7030003320 | S.RES ERJ3GEYJ 101 V (100) | T | 66.5/5.7 |
| R231 | 7030003320 | S.RES ERJ3GEYJ 101 V (100) | T | 73.9/23.8 |
| R232 | 7030003680 | S.RES ERJ3GEYJ 104 V (100 k) | T | 74.3/20.3 |
| R233 | 7030003560 | S.RES ERJ3GEYJ 103 V (10 k) | T | 76.4/22 |
| R234 | 7030003320 | S.RES ERJ3GEYJ 101 V (100) | T | 73.3/17.2 |
| R235 | 7030003860 | S.RES ERJ3GE JPW V | T | 155.9/58.5 |
| R240 | 7030003420 | S.RES ERJ3GEYJ 681 V (680) | T | 177.1/58.1 |
| R241 | 7030003360 | S.RES ERJ3GEYJ 221 V (220) | T | 233.5/35.2 |
| R242 | 7030003440 | S.RES ERJ3GEYJ 102 V (1 k) | T | 233.4/32.7 |
| R243 | 7030003440 | S.RES ERJ3GEYJ 102 V (1 k) | T | 213.8/40.1 |
| R244 | 7030003440 | S.RES ERJ3GEYJ 102 V (1 k) | T | 217.1/43.5 |
| R245 | 7030003540 | S.RES ERJ3GEYJ 682 V (6.8 k) | T | 215.3/44.3 |
| R246 | 7030003440 | S.RES ERJ3GEYJ 102 V (1 k) | T | 205.3/41.8 |
| R247 | 7030003440 | S.RES ERJ3GEYJ 102 V (1 k) | T | 204/44.6 |
| R248 | 7030003540 | S.RES ERJ3GEYJ 682 V (6.8 k) | T | 205.3/44.6 |
| R249 | 7030003560 | S.RES ERJ3GEYJ 103 V (10 k) | T | 163.3/70.9 |
| R250 | 7030003200 | S.RES ERJ3GEYJ 100 V (10) | B | 117.1/28.7 |
| R251 | 7030003200 | S.RES ERJ3GEYJ 100 V (10) | B | 117.8/30.1 |
| R252 | 7030003200 | S.RES ERJ3GEYJ 100 V (10) | B | 117.1/31.5 |
| R253 | 7030003200 | S.RES ERJ3GEYJ 100 V (10) | B | 117.8/32.9 |
| R254 | 7030003200 | S.RES ERJ3GEYJ 100 V (10) | B | 117.1/34.3 |
| R255 | 7030003200 | S.RES ERJ3GEYJ 100 V (10) | B | 117.8/35.7 |
| R256 | 7030003200 | S.RES ERJ3GEYJ 100 V (10) | B | 117.1/37.1 |
| R257 | 7030003200 | S.RES ERJ3GEYJ 100 V (10) | B | 117.8/38.5 |
| R258 | 7030003560 | S.RES ERJ3GEYJ 103 V (10 k) | B | 120.4/28.7 |
| R259 | 7030003560 | S.RES ERJ3GEYJ 103 V (10 k) | B | 121.2/30.1 |
| R260 | 7030003560 | S.RES ERJ3GEYJ 103 V (10 k) | B | 120.4/31.5 |
| R261 | 7030003560 | S.RES ERJ3GEYJ 103 V (10 k) | B | 121.2/32.9 |
| R262 | 7030003560 | S.RES ERJ3GEYJ 103 V (10 k) | B | 120.4/34.3 |
| R263 | 7030003560 | S.RES ERJ3GEYJ 103 V (10 k) | B | 121.2/35.7 |
| R264 | 7030003560 | S.RES ERJ3GEYJ 103 V (10 k) | B | 120.4/37.1 |
| R265 | 7030003560 | S.RES ERJ3GEYJ 103 V (10 k) | B | 121.2/38.5 |
| R270 | 7030003200 | S.RES ERJ3GEYJ 100 V (10) | B | 120.6/42.8 |
| R271 | 7030003200 | S.RES ERJ3GEYJ 100 V (10) | B | 121.3/44.2 |
| R272 | 7030003200 | S.RES ERJ3GEYJ 100 V (10) | B | 120.6/45.6 |
| R273 | 7030003200 | S.RES ERJ3GEYJ 100 V (10) | B | 121.3/47 |
| R274 | 7030003200 | S.RES ERJ3GEYJ 100 V (10) | B | 120.6/48.4 |
| R275 | 7030003200 | S.RES ERJ3GEYJ 100 V (10) | B | 121.3/49.8 |
| R276 | 7030003200 | S.RES ERJ3GEYJ 100 V (10) | B | 120.6/51.2 |
| R277 | 7030003200 | S.RES ERJ3GEYJ 100 V (10) | B | 124.2/54.7 |
| R278 | 7030003560 | S.RES ERJ3GEYJ 103 V (10 k) | B | 124.3/42.8 |
| R279 | 7030003560 | S.RES ERJ3GEYJ 103 V (10 k) | B | 125/44.2 |
| R280 | 7030003560 | S.RES ERJ3GEYJ 103 V (10 k) | B | 124.3/45.6 |
| R281 | 7030003560 | S.RES ERJ3GEYJ 103 V (10 k) | B | 125/47 |
| R282 | 7030003560 | S.RES ERJ3GEYJ 103 V (10 k) | B | 124.3/48.4 |
| R283 | 7030003560 | S.RES ERJ3GEYJ 103 V (10 k) | B | 125/49.8 |
| R284 | 7030003560 | S.RES ERJ3GEYJ 103 V (10 k) | B | 124.3/51.2 |
| R285 | 7030003560 | S.RES ERJ3GEYJ 103 V (10 k) | B | 125/52.6 |
| R290 | 7030003200 | S.RES ERJ3GEYJ 100 V (10) | B | 164.1/41.5 |
| R291 | 7030003200 | S.RES ERJ3GEYJ 100 V (10) | B | 164.1/39.7 |
| R292 | 7030003200 | S.RES ERJ3GEYJ 100 V (10) | B | 164.1/37.9 |
| R293 | 7030003200 | S.RES ERJ3GEYJ 100 V (10) | B | 164.1/36.1 |
| R294 | 7030003200 | S.RES ERJ3GEYJ 100 V (10) | B | 164.1/34.3 |
| R295 | 7030003200 | S.RES ERJ3GEYJ 100 V (10) | B | 164.1/32.5 |
| R296 | 7030003200 | S.RES ERJ3GEYJ 100 V (10) | B | 164.1/30.7 |
| R298 | 7030003560 | S.RES ERJ3GEYJ 103 V (10 k) | B | 160.8/41.5 |
| R299 | 7030003560 | S.RES ERJ3GEYJ 103 V (10 k) | B | 160.8/39.7 |
| R300 | 7030003560 | S.RES ERJ3GEYJ 103 V (10 k) | B | 160.8/37.9 |
| R301 | 7030003560 | S.RES ERJ3GEYJ 103 V (10 k) | B | 160.8/36.1 |
| R302 | 7030003560 | S.RES ERJ3GEYJ 103 V (10 k) | B | 160.8/34.3 |
| R303 | 7030003560 | S.RES ERJ3GEYJ 103 V (10 k) | B | 160.8/32.5 |
| R304 | 7030003560 | S.RES ERJ3GEYJ 103 V (10 k) | B | 160.8/30.7 |
| R310 | 7030003200 | S.RES ERJ3GEYJ 100 V (10) | B | 166.1/55.9 |
| R311 | 7030003200 | S.RES ERJ3GEYJ 100 V (10) | B | 163.5/54.1 |
| R312 | 7030003200 | S.RES ERJ3GEYJ 100 V (10) | B | 164.1/52.3 |
| R313 | 7030003200 | S.RES ERJ3GEYJ 100 V (10) | B | 164.1/50.5 |
| R314 | 7030003200 | S.RES ERJ3GEYJ 100 V (10) | B | 164.1/48.7 |
| R315 | 7030003200 | S.RES ERJ3GEYJ 100 V (10) | B | 164.1/46.9 |
| R316 | 7030003200 | S.RES ERJ3GEYJ 100 V (10) | B | 164.1/45.1 |
| R317 | 7030003200 | S.RES ERJ3GEYJ 100 V (10) | B | 164.1/43.3 |
| R318 | 7030003560 | S.RES ERJ3GEYJ 103 V (10 k) | B | 162.1/55.9 |
| R319 | 7030003560 | S.RES ERJ3GEYJ 103 V (10 k) | B | 160.2/54.1 |
| R320 | 7030003560 | S.RES ERJ3GEYJ 103 V (10 k) | B | 160.8/52.3 |
| R321 | 7030003560 | S.RES ERJ3GEYJ 103 V (10 k) | B | 160.8/50.5 |
| R322 | 7030003560 | S.RES ERJ3GEYJ 103 V (10 k) | B | 160.8/48.7 |
| R323 | 7030003560 | S.RES ERJ3GEYJ 103 V (10 k) | B | 160.8/46.9 |
| R324 | 7030003560 | S.RES ERJ3GEYJ 103 V (10 k) | B | 160.8/45.1 |
| R325 | 7030003560 | S.RES ERJ3GEYJ 103 V (10 k) | B | 160.8/43.3 |
| R330 | 7030009891 | S.RES ERA3YED 151V (150) | T | 155/65.5 |
| R331 | 7030009851 | S.RES ERA3YED 271V (270) | T | 152.4/65.5 |
| R341 | 7030003520 | S.RES ERJ3GEYJ 472 V (4.7 k) | B | 199.8/27.5 |
| R342 | 7030004050 | S.RES ERJ3GEYJ 1R0 V (1) | T | 214.6/28.5 |
| R351 | 7030003680 | S.RES ERJ3GEYJ 104 V (100 k) | T | 129.6/81.6 |
| R352 | 7030003640 | S.RES ERJ3GEYJ 473 V (47 k) | T | 132.5/83.2 |
| R353 | 7030003560 | S.RES ERJ3GEYJ 103 V (10 k) | T | 134.7/83.7 |
| R361 | 7030003520 | S.RES ERJ3GEYJ 472 V (4.7 k) | B | 144.7/26.2 |
| R362 | 7030004050 | S.RES ERJ3GEYJ 1R0 V (1) | T | 157.7/16.5 |
| R381 | 7030004050 | S.RES ERJ3GEYJ 1R0 V (1) | T | 93.7/50.7 |
| R397 | 7030003410 | S.RES ERJ3GEYJ 561 V (560) | B | 108.3/36.7 |
| R398 | 7030007860 | S.RES ERJ3GEYJ 8R2V (8.2) | B | 110.2/38.7 |
| R399 | 7030003410 | S.RES ERJ3GEYJ 561 V (560) | B | 108.3/39.6 |
| R400 | 7030003360 | S.RES ERJ3GEYJ 221 V (220) | T | 228.3/9.9 |
| R401 | 7030003360 | S.RES ERJ3GEYJ 221 V (220) | B | 227.3/9.9 |
| R402 | 7030003360 | S.RES ERJ3GEYJ 221 V (220) | T | 226.3/9.9 |
| R403 | 7030003360 | S.RES ERJ3GEYJ 221 V (220) | T | 28.3/9.9 |
| R404 | 7030003360 | S.RES ERJ3GEYJ 221 V (220) | T | 27/9.9 |
| R405 | 7030003360 | S.RES ERJ3GEYJ 221 V (220) | T | 25.7/9.9 |
| R410 | 7030003320 | S.RES ERJ3GEYJ 101 V (100) | T | 9.9/56 |

## [MAIN UNIT]

| REF NO. | ORDER NO. | DESCRIPTION | M. | H/V LOCATION |
|---|---|---|---|---|
| R413 | 7030003320 | S.RES ERJ3GEYJ 101 V (100) | B | 9.9/53 |
| R414 | 7030003320 | S.RES ERJ3GEYJ 101 V (100) | T | 9.9/52 |
| R415 | 7030003320 | S.RES ERJ3GEYJ 101 V (100) | B | 9.9/51 |
| R416 | 7030003320 | S.RES ERJ3GEYJ 101 V (100) | T | 9.9/50 |
| R417 | 7030003320 | S.RES ERJ3GEYJ 101 V (100) | B | 9.9/47 |
| R418 | 7030003320 | S.RES ERJ3GEYJ 101 V (100) | T | 9.9/46 |
| R419 | 7030003320 | S.RES ERJ3GEYJ 101 V (100) | B | 9.9/45 |
| R420 | 7030003320 | S.RES ERJ3GEYJ 101 V (100) | T | 9.9/44 |
| R421 | 7030003320 | S.RES ERJ3GEYJ 101 V (100) | B | 9.9/43 |
| R422 | 7030003320 | S.RES ERJ3GEYJ 101 V (100) | T | 9.9/32 |
| R423 | 7030003320 | S.RES ERJ3GEYJ 101 V (100) | T | 9.9/30 |
| R424 | 7030003320 | S.RES ERJ3GEYJ 101 V (100) | B | 9.9/29 |
| R450 | 7030003600 | S.RES ERJ3GEYJ 223 V (22 k) | B | 205.8/28 |
| R451 | 7030003600 | S.RES ERJ3GEYJ 223 V (22 k) | B | 166.9/18.4 |
| R452 | 7030003600 | S.RES ERJ3GEYJ 223 V (22 k) | B | 94.3/43.7 |
| R460 | 7030003560 | S.RES ERJ3GEYJ 103 V (10 k) | B | 144.4/79.4 |
| R461 | 7030003560 | S.RES ERJ3GEYJ 103 V (10 k) | B | 144.1/73.6 |
| R462 | 7030003580 | S.RES ERJ3GEYJ 153 V (15 k) | T | 79.1/23.3 |
| R463 | 7030003560 | S.RES ERJ3GEYJ 103 V (10 k) | T | 158.6/71.4 |
| R466 | 7030003440 | S.RES ERJ3GEYJ 102 V (1 k) | T | 73.7/22.2 |
| R467 | 7030003320 | S.RES ERJ3GEYJ 101 V (100) | B | 148.2/73.6 |
| R468 | 7030003620 | S.RES ERJ3GEYJ 333 V (33 k) | T | 142.2/77.4 |
| R469 | 7030003520 | S.RES ERJ3GEYJ 472 V (4.7 k) | T | 143/75.7 |
| R470 | 7030003620 | S.RES ERJ3GEYJ 333 V (33 k) | T | 165.9/78.4 |
| R471 | 7030003440 | S.RES ERJ3GEYJ 102 V (1 k) | T | 152.2/67.8 |
| R472 | 7030003640 | S.RES ERJ3GEYJ 473 V (47 k) | T | 165.9/77.1 |
| R474 | 7030003600 | S.RES ERJ3GEYJ 223 V (22 k) | T | 132.5/75.3 |
| R476 | 7030003760 | S.RES ERJ3GEYJ 474 V (470 k) | T | 126.5/77.5 |
| R479 | 7030003550 | S.RES ERJ3GEYJ 822 V (8.2 k) | B | 170.5/73.6 |
| R481 | 7030003860 | S.RES ERJ3GE JPW V | B | 170.5/70.8 |
| R482 | 7030000010 | S.RES MCR10EZHJ JPW (000) | B | 108.8/46 |
| R483 | 7030000010 | S.RES MCR10EZHJ JPW (000) | B | 206.6/18.3 |
| R484 | 7030000010 | S.RES MCR10EZHJ JPW (000) | B | 151.6/27.6 |
| R485 | 7030003860 | S.RES ERJ3GE JPW V | T | 9.9/48 |
| R486 | 7030003860 | S.RES ERJ3GE JPW V | B | 9.9/49 |
| R487 | 7030000010 | S.RES MCR10EZHJ JPW (000) | T | 9.9/58.1 |
| R488 | 7030003860 | S.RES ERJ3GE JPW V | B | 111.4/76.2 |
| R489 | 7030003500 | S.RES ERJ3GEYJ 332 V (3.3 k) | B | 229/6 |
| R490 | 7030003440 | S.RES ERJ3GEYJ 102 V (1 k) | B | 159.4/63.3 |
| R491 | 7030003560 | S.RES ERJ3GEYJ 103 V (10 k) | B | 157.7/59.6 |
| R492 | 7030003560 | S.RES ERJ3GEYJ 103 V (10 k) | B | 159.5/59.6 |
| R493 | 7030003410 | S.RES ERJ3GEYJ 561 V (560) | T | 130.7/103 |
| R494 | 7030005331 | S.RES ERA3YED 562V (5.6 k) | T | 218.4/78.6 |
| R495 | 7030010480 | S.RES ERJ1TYJ 181U (180) | T | 212.4/2.3 |
| R496 | 7030005331 | S.RES ERA3YED 562V (5.6 k) | T | 218.4/77.3 |
| R497 | 7030007911 | S.RES ERA3YKD 563V (56 k) | B | 228.6/16.1 |
| R498 | 7030005631 | S.RES ERA3YKD 154V (150 k) | B | 228.6/20.2 |
| R499 | 7030005631 | S.RES ERA3YKD 154V (150 k) | B | 230.4/20.2 |
| R501 | 7030003440 | S.RES ERJ3GEYJ 102 V (1 k) | T | 20.7/58.3 |
| R502 | 7030003560 | S.RES ERJ3GEYJ 103 V (10 k) | T | 19.2/60.9 |
| R503 | 7030003440 | S.RES ERJ3GEYJ 102 V (1 k) | T | 22.2/58.3 |
| R504 | 7030003440 | S.RES ERJ3GEYJ 102 V (1 k) | T | 23.7/60.9 |
| R505 | 7030003320 | S.RES ERJ3GEYJ 101 V (100) | T | 26/61.7 |
| R506 | 7030003320 | S.RES ERJ3GEYJ 101 V (100) | T | 16.1/70.6 |
| R507 | 7030003440 | S.RES ERJ3GEYJ 102 V (1 k) | T | 22.2/72.4 |
| R508 | 7030003440 | S.RES ERJ3GEYJ 102 V (1 k) | T | 23.7/72.4 |
| R509 | 7030003320 | S.RES ERJ3GEYJ 101 V (100) | T | 26.7/72.4 |
| R510 | 7030003320 | S.RES ERJ3GEYJ 101 V (100) | T | 19.2/81.2 |
| R511 | 7030003320 | S.RES ERJ3GEYJ 101 V (100) | T | 21.4/87.5 |
| R512 | 7030003650 | S.RES ERJ3GEYJ 563 V (56 k) | B | 228.2/3.1 |
| R513 | 7030003860 | S.RES ERJ3GE JPW V | T | 103.9/68.7 |
| R514 | 7030003440 | S.RES ERJ3GEYJ 102 V (1 k) | T | 19.2/96.4 |
| R515 | 7030003410 | S.RES ERJ3GEYJ 561 V (560) | T | 26.6/96.4 |
| R516 | 7030003440 | S.RES ERJ3GEYJ 102 V (1 k) | T | 25.3/84.6 |
| R517 | 7030003520 | S.RES ERJ3GEYJ 472 V (4.7 k) | T | 23.2/84.6 |
| R518 | 7030003400 | S.RES ERJ3GEYJ 471 V (470) | B | 20.1/91.9 |
| R519 | 7030003560 | S.RES ERJ3GEYJ 103 V (10 k) | B | 20.1/89 |
| R520 | 7030003630 | S.RES ERJ3GEYJ 393 V (39 k) | B | 24.3/91.9 |
| R521 | 7030003600 | S.RES ERJ3GEYJ 223 V (22 k) | B | 24.3/87.7 |
| R522 | 7030003200 | S.RES ERJ3GEYJ 100 V (10) | B | 230.4/24.8 |
| R523 | 7030003360 | S.RES ERJ3GEYJ 221 V (220) | B | 27.9/87.7 |
| R524 | 7030003560 | S.RES ERJ3GEYJ 103 V (10 k) | B | 27.1/93.9 |
| R525 | 7030003480 | S.RES ERJ3GEYJ 222 V (2.2 k) | B | 31.3/91.9 |
| R526 | 7030003440 | S.RES ERJ3GEYJ 102 V (1 k) | B | 31.3/98.2 |
| R527 | 7030003560 | S.RES ERJ3GEYJ 103 V (10 k) | B | 31.3/94.9 |
| R528 | 7030003560 | S.RES ERJ3GEYJ 103 V (10 k) | B | 34.3/96.2 |
| R529 | 7030003560 | S.RES ERJ3GEYJ 103 V (10 k) | B | 34.3/89.7 |
| R530 | 7030003560 | S.RES ERJ3GEYJ 103 V (10 k) | B | 48.1/95.1 |
| R531 | 7030003560 | S.RES ERJ3GEYJ 103 V (10 k) | B | 48.1/82 |
| R532 | 7030003440 | S.RES ERJ3GEYJ 102 V (1 k) | B | 40.9/91.4 |
| R533 | 7030003560 | S.RES ERJ3GEYJ 103 V (10 k) | B | 44.5/91.4 |
| R534 | 7030003560 | S.RES ERJ3GEYJ 103 V (10 k) | T | 49.1/79.5 |
| R535 | 7030003440 | S.RES ERJ3GEYJ 102 V (1 k) | B | 49.9/82 |
| R536 | 7030003490 | S.RES ERJ3GEYJ 272 V (2.7 k) | B | 48.7/85.7 |
| R537 | 7030003320 | S.RES ERJ3GEYJ 101 V (100) | T | 53.5/84.4 |
| R538 | 7310005550 | S.TRI TMC3ADCJ4X (22 k) | T | 49.3/90.7 |
| R539 | 7030003400 | S.RES ERJ3GEYJ 471 V (470) | B | 51.7/95.1 |
| R540 | 7030003220 | S.RES ERJ3GEYJ 150 V (15) | B | 66.4/96.1 |
| R541 | 7030003380 | S.RES ERJ3GEYJ 331 V (330) | B | 64.3/96.9 |
| R543 | 7030003380 | S.RES ERJ3GEYJ 331 V (330) | B | 64.3/95.3 |
| R544 | 7030005671 | S.RES ERA3YKD 393V (39 k) | B | 229.4/17.7 |
| R545 | 7030004030 | S.RES ERJ3GEYJ 5R6 V (5.6) | B | 59.9/93.8 |
| R546 | 7030003430 | S.RES ERJ3GEYJ 821 V (820) | B | 58.7/90.7 |
| R547 | 7030003430 | S.RES ERJ3GEYJ 821 V (820) | B | 61.1/90.7 |
| R548 | 7030004030 | S.RES ERJ3GEYJ 5R6 V (5.6) | B | 80.6/93.8 |
| R549 | 7030003560 | S.RES ERJ3GEYJ 103 V (10 k) | T | 129.5/104.6 |
| R550 | 7030003560 | S.RES ERJ3GEYJ 103 V (10 k) | T | 132.8/106.5 |
| R551 | 7030003680 | S.RES ERJ3GEYJ 104 V (100 k) | T | 188.5/106.1 |
| R552 | 7030004040 | S.RES ERJ3GEYJ 4R7 V (4.7) | B | 101.6/88.7 |
| R553 | 7030009891 | S.RES ERA3YED 151V (150) | B | 108.3/85.2 |
| R554 | 7030003440 | S.RES ERJ3GEYJ 102 V (1 k) | B | 105.6/85.2 |
| R555 | 7510001491 | S.TMR NTCG16 3NH 681JT | B | 103.8/78 |
| R556 | 7030003480 | S.RES ERJ3GEYJ 222 V (2.2 k) | B | 103.8/80.6 |
| R557 | 7030005331 | S.RES ERA3YED 562V (5.6 k) | B | 229.4/23 |

M.=Mounted side (T: Mounted on the Top side, B: Mounted on the Bottom side)
S.=Surface mount

## [MAIN UNIT]

| REF NO. | ORDER NO. | DESCRIPTION | M. | H/V LOCATION |
|---|---|---|---|---|
| R558 | 7030003320 | S.RES ERJ3GEYJ 101 V (100) | B | 102.9/74.8 |
| R559 | 7030003680 | S.RES ERJ3GEYJ 104 V (100 k) | T | 132.8/105.2 |
| R560 | 7030003680 | S.RES ERJ3GEYJ 104 V (100 k) | T | 188.5/103.4 |
| R561 | 7030003680 | S.RES ERJ3GEYJ 104 V (100 k) | T | 133.6/102.4 |
| R562 | 7030003320 | S.RES ERJ3GEYJ 101 V (100) | B | 77.5/69.5 |
| R563 | 7030003300 | S.RES ERJ3GEYJ 680 V (68) | T | 110/62.7 |
| R564 | 7030003620 | S.RES ERJ3GEYJ 333 V (33 k) | T | 107.1/64.2 |
| R565 | 7030003640 | S.RES ERJ3GEYJ 473 V (47 k) | B | 234.6/4.6 |
| R566 | 7030003330 | S.RES ERJ3GEYJ 121 V (120) | T | 102.8/74.1 |
| R567 | 7030003230 | S.RES ERJ3GEYJ 180 V (18) | B | 91.4/67.6 |
| R568 | 7030009851 | S.RES ERA3YED 271V (270) | B | 93.4/66.8 |
| R569 | 7030009851 | S.RES ERA3YED 271V (270) | B | 89.3/66.8 |
| R570 | 7030003520 | S.RES ERJ3GEYJ 472 V (4.7 k) | T | 59.8/60.7 |
| R571 | 7030003560 | S.RES ERJ3GEYJ 103 V (10 k) | B | 64.5/59.2 |
| R572 | 7030004040 | S.RES ERJ3GEYJ 4R7 V (4.7) | T | 61.5/68.2 |
| R573 | 7030003400 | S.RES ERJ3GEYJ 471 V (470) | B | 68.2/59.2 |
| R574 | 7030003280 | S.RES ERJ3GEYJ 470 V (47) | T | 69.8/63.8 |
| R575 | 7030009851 | S.RES ERA3YED 271V (270) | B | 56.7/59.3 |
| R576 | 7030003230 | S.RES ERJ3GEYJ 180 V (18) | B | 54.6/58.5 |
| R577 | 7030009851 | S.RES ERA3YED 271V (270) | B | 56.7/57.7 |
| R578 | 7030003230 | S.RES ERJ3GEYJ 180 V (18) | B | 61.6/72 |
| R579 | 7030009851 | S.RES ERA3YED 271V (270) | B | 57.9/72.8 |
| R580 | 7030009851 | S.RES ERA3YED 271V (270) | B | 57.9/71 |
| R581 | 7030003430 | S.RES ERJ3GEYJ 821 V (820) | B | 92.6/72.9 |
| R582 | 7030004030 | S.RES ERJ3GEYJ 5R6 V (5.6) | B | 91.8/70.9 |
| R583 | 7030003430 | S.RES ERJ3GEYJ 821 V (820) | B | 94.2/70.8 |
| R584 | 7510001671 | S.TMR NTCG16 4BH 103JT | T | 218.4/79.9 |
| R585 | 7030003600 | S.RES ERJ3GEYJ 223 V (22 k) | B | 25/89.8 |
| R587 | 7030003200 | S.RES ERJ3GEYJ 100 V (10) | B | 61.5/68.1 |
| R589 | 7030003400 | S.RES ERJ3GEYJ 471 V (470) | B | 64.5/63.7 |
| R590 | 7030003430 | S.RES ERJ3GEYJ 821 V (820) | B | 79.8/91.7 |
| R591 | 7030003430 | S.RES ERJ3GEYJ 821 V (820) | B | 81.5/91.7 |
| R592 | 7030000300 | S.RES MCR10EZHJ 220 (221) | B | 59.4/61.8 |
| R601 | 7030000260 | S.RES MCR10EZHJ 100 (101) | B | 42.7/43.5 |
| R602 | 7030000260 | S.RES MCR10EZHJ 100 (101) | B | 53.5/43.5 |
| R603 | 7030000260 | S.RES MCR10EZHJ 100 (101) | B | 64.3/43.5 |
| R604 | 7030000260 | S.RES MCR10EZHJ 100 (101) | B | 75.2/43.5 |
| R605 | 7030000260 | S.RES MCR10EZHJ 100 (101) | B | 86/43.5 |
| R606 | 7030000260 | S.RES MCR10EZHJ 100 (101) | T | 34.3/43.5 |
| R607 | 7030000260 | S.RES MCR10EZHJ 100 (101) | T | 43.3/43.5 |
| R608 | 7030000260 | S.RES MCR10EZHJ 100 (101) | T | 52.3/43.5 |
| R609 | 7030000260 | S.RES MCR10EZHJ 100 (101) | T | 61.3/43.5 |
| R610 | 7030003400 | S.RES ERJ3GEYJ 471 V (470) | T | 79.8/54 |
| R611 | 7030000260 | S.RES MCR10EZHJ 100 (101) | T | 70.3/43.5 |
| R612 | 7030009851 | S.RES ERA3YED 271V (270) | T | 44/54 |
| R613 | 7030003230 | S.RES ERJ3GEYJ 180 V (18) | T | 46.2/53.3 |
| R614 | 7030009851 | S.RES ERA3YED 271V (270) | T | 44/52.7 |
| R801 | 7030003380 | S.RES ERJ3GEYJ 331 V (330) | T | 37.2/26.2 |
| R802 | 7030009891 | S.RES ERA3YED 151V (150) | B | 37.2/18.7 |
| R803 | 7030003440 | S.RES ERJ3GEYJ 102 V (1 k) | B | 49.7/21 |
| R804 | 7030003490 | S.RES ERJ3GEYJ 272 V (2.7 k) | B | 47.8/21.7 |
| R805 | 7030003300 | S.RES ERJ3GEYJ 680 V (68) | T | 57.6/18.7 |
| R806 | 7030003320 | S.RES ERJ3GEYJ 101 V (100) | T | 56.2/18.7 |
| R807 | 7030003320 | S.RES ERJ3GEYJ 101 V (100) | T | 56.9/16.5 |
| R808 | 7030003640 | S.RES ERJ3GEYJ 473 V (47 k) | B | 89.9/87.6 |
| R809 | 7030003460 | S.RES ERJ3GEYJ 152 V (1.5 k) | B | 84.7/87.6 |
| R810 | 7030003680 | S.RES ERJ3GEYJ 104 V (100 k) | T | 34/22.3 |
| R811 | 7030003560 | S.RES ERJ3GEYJ 103 V (10 k) | T | 30.8/19.6 |
| R812 | 7030009851 | S.RES ERA3YED 271V (270) | T | 34/27.5 |
| R813 | 7030003230 | S.RES ERJ3GEYJ 180 V (18) | T | 34/26.2 |
| R814 | 7030009851 | S.RES ERA3YED 271V (270) | T | 34/24.9 |
| R815 | 7030003320 | S.RES ERJ3GEYJ 101 V (100) | T | 31.9/25.5 |
| R816 | 7030003680 | S.RES ERJ3GEYJ 104 V (100 k) | T | 31.2/23.6 |
| R817 | 7030003860 | S.RES ERJ3GE JPW V | T | 52.7/23.9 |
| R818 | 7030003320 | S.RES ERJ3GEYJ 101 V (100) | B | 41.7/21 |
| R820 | 7030003440 | S.RES ERJ3GEYJ 102 V (1 k) | T | 77.7/62.7 |
| R821 | 7030003320 | S.RES ERJ3GEYJ 101 V (100) | T | 88.2/60.9 |
| R822 | 7030003620 | S.RES ERJ3GEYJ 333 V (33 k) | T | 88.2/57.9 |
| R823 | 7030003280 | S.RES ERJ3GEYJ 470 V (47) | T | 83.2/51.5 |
| R824 | 7030003320 | S.RES ERJ3GEYJ 101 V (100) | T | 77/58.6 |
| R825 | 7030003320 | S.RES ERJ3GEYJ 101 V (100) | T | 82.3/33.8 |
| R826 | 7030003230 | S.RES ERJ3GEYJ 180 V (18) | T | 87.2/36.2 |
| R827 | 7030009851 | S.RES ERA3YED 271V (270) | T | 85.2/37 |
| R828 | 7030009851 | S.RES ERA3YED 271V (270) | T | 85.2/35.5 |
| R829 | 7030003400 | S.RES ERJ3GEYJ 471 V (470) | T | 86.5/55.1 |
| R830 | 7030003330 | S.RES ERJ3GEYJ 121 V (120) | T | 86/53.2 |
| R831 | 7030003600 | S.RES ERJ3GEYJ 223 V (22 k) | T | 83.2/54.5 |
| R832 | 7030003290 | S.RES ERJ3GEYJ 560 V (56) | B | 87.3/71.1 |
| R833 | 7030003480 | S.RES ERJ3GEYJ 222 V (2.2 k) | B | 89.4/71.8 |
| R834 | 7030003440 | S.RES ERJ3GEYJ 102 V (1 k) | B | 85.3/79.2 |
| R835 | 7030003440 | S.RES ERJ3GEYJ 102 V (1 k) | B | 83.1/74.2 |
| R836 | 7030003500 | S.RES ERJ3GEYJ 332 V (3.3 k) | B | 83.2/79.1 |
| R837 | 7030003480 | S.RES ERJ3GEYJ 222 V (2.2 k) | T | 29.8/81.6 |
| R838 | 7030003510 | S.RES ERJ3GEYJ 392 V (3.9 k) | T | 33.6/73.8 |
| R839 | 7030003480 | S.RES ERJ3GEYJ 222 V (2.2 k) | T | 38.1/73.4 |
| R840 | 7030003400 | S.RES ERJ3GEYJ 471 V (470) | T | 38.1/72.1 |
| R841 | 7030003300 | S.RES ERJ3GEYJ 680 V (68) | T | 35.3/71.6 |
| R851 | 7030009861 | S.RES ERA3YED 471V (470) | T | 110/87.6 |
| R852 | 7030003560 | S.RES ERJ3GEYJ 103 V (10 k) | T | 37.9/69.8 |
| R900 | 7030003320 | S.RES ERJ3GEYJ 101 V (100) | T | 126.2/5.8 |
| R901 | 7030003320 | S.RES ERJ3GEYJ 101 V (100) | B | 125.2/5.8 |
| R902 | 7030003320 | S.RES ERJ3GEYJ 101 V (100) | T | 124.2/5.8 |
| R903 | 7030003320 | S.RES ERJ3GEYJ 101 V (100) | B | 123.2/5.8 |
| R904 | 7030003320 | S.RES ERJ3GEYJ 101 V (100) | T | 122.2/5.8 |
| R906 | 7030003320 | S.RES ERJ3GEYJ 101 V (100) | T | 120.2/5.8 |
| R908 | 7030003320 | S.RES ERJ3GEYJ 101 V (100) | T | 118.2/5.8 |
| R909 | 7030003320 | S.RES ERJ3GEYJ 101 V (100) | B | 117.2/5.8 |
| R910 | 7030003320 | S.RES ERJ3GEYJ 101 V (100) | T | 116.2/5.8 |
| R911 | 7030003320 | S.RES ERJ3GEYJ 101 V (100) | B | 115.2/5.8 |
| R912 | 7030003320 | S.RES ERJ3GEYJ 101 V (100) | T | 114.2/5.8 |
| R913 | 7030003320 | S.RES ERJ3GEYJ 101 V (100) | B | 113.2/5.8 |
| R914 | 7030003320 | S.RES ERJ3GEYJ 101 V (100) | T | 112.2/5.8 |
| R915 | 7030003320 | S.RES ERJ3GEYJ 101 V (100) | B | 111.2/5.8 |
| R916 | 7030003320 | S.RES ERJ3GEYJ 101 V (100) | T | 110.2/5.8 |

## [MAIN UNIT]

| REF NO. | ORDER NO. | DESCRIPTION | M. | H/V LOCATION |
|---|---|---|---|---|
| R917 | 7030003320 | S.RES ERJ3GEYJ 101 V (100) | B | 109.2/5.8 |
| R918 | 7030003320 | S.RES ERJ3GEYJ 101 V (100) | T | 13.8/119.5 |
| R920 | 7030003320 | S.RES ERJ3GEYJ 101 V (100) | T | 125.7/15.4 |
| R921 | 7030003320 | S.RES ERJ3GEYJ 101 V (100) | B | 124.7/15.4 |
| R922 | 7030003320 | S.RES ERJ3GEYJ 101 V (100) | T | 123.7/15.4 |
| R923 | 7030003320 | S.RES ERJ3GEYJ 101 V (100) | B | 122.7/15.4 |
| R924 | 7030003320 | S.RES ERJ3GEYJ 101 V (100) | T | 121.7/15.4 |
| R925 | 7030003320 | S.RES ERJ3GEYJ 101 V (100) | B | 120.7/15.4 |
| R926 | 7030003320 | S.RES ERJ3GEYJ 101 V (100) | T | 119.7/15.4 |
| R927 | 7030003320 | S.RES ERJ3GEYJ 101 V (100) | B | 118.7/15.4 |
| R928 | 7030003320 | S.RES ERJ3GEYJ 101 V (100) | T | 117.7/15.4 |
| R929 | 7030003320 | S.RES ERJ3GEYJ 101 V (100) | B | 116.7/15.4 |
| R930 | 7030003320 | S.RES ERJ3GEYJ 101 V (100) | T | 115.7/15.4 |
| R932 | 7030003320 | S.RES ERJ3GEYJ 101 V (100) | T | 113.7/15.4 |
| R933 | 7030003320 | S.RES ERJ3GEYJ 101 V (100) | B | 112.7/15.4 |
| R934 | 7030003320 | S.RES ERJ3GEYJ 101 V (100) | T | 111.7/15.4 |
| R936 | 7030003320 | S.RES ERJ3GEYJ 101 V (100) | T | 109.7/15.4 |
| R937 | 7030003320 | S.RES ERJ3GEYJ 101 V (100) | B | 108.7/15.4 |
| R938 | 7030003320 | S.RES ERJ3GEYJ 101 V (100) | T | 12.5/119.5 |
| R940 | 7030003320 | S.RES ERJ3GEYJ 101 V (100) | T | 94.3/5.8 |
| R941 | 7030003320 | S.RES ERJ3GEYJ 101 V (100) | B | 93.3/5.8 |
| R942 | 7030003320 | S.RES ERJ3GEYJ 101 V (100) | T | 92.3/5.8 |
| R943 | 7030003320 | S.RES ERJ3GEYJ 101 V (100) | B | 91.3/5.8 |
| R944 | 7030003320 | S.RES ERJ3GEYJ 101 V (100) | T | 90.3/5.8 |
| R945 | 7030003320 | S.RES ERJ3GEYJ 101 V (100) | B | 89.3/5.8 |
| R946 | 7030003320 | S.RES ERJ3GEYJ 101 V (100) | T | 88.3/5.8 |
| R947 | 7030003320 | S.RES ERJ3GEYJ 101 V (100) | B | 87.3/5.8 |
| R948 | 7030003320 | S.RES ERJ3GEYJ 101 V (100) | T | 86.3/5.8 |
| R949 | 7030003320 | S.RES ERJ3GEYJ 101 V (100) | B | 85.3/5.8 |
| R950 | 7030003320 | S.RES ERJ3GEYJ 101 V (100) | T | 84.3/5.8 |
| R951 | 7030003320 | S.RES ERJ3GEYJ 101 V (100) | B | 83.3/5.8 |
| R952 | 7030003320 | S.RES ERJ3GEYJ 101 V (100) | T | 82.3/5.8 |
| R953 | 7030003320 | S.RES ERJ3GEYJ 101 V (100) | B | 81.3/5.8 |
| R954 | 7030003320 | S.RES ERJ3GEYJ 101 V (100) | T | 80.3/5.8 |
| R955 | 7030003320 | S.RES ERJ3GEYJ 101 V (100) | B | 79.3/5.8 |
| R957 | 7030003320 | S.RES ERJ3GEYJ 101 V (100) | B | 77.3/5.8 |
| R958 | 7030003320 | S.RES ERJ3GEYJ 101 V (100) | T | 76.3/5.8 |
| R960 | 7030003320 | S.RES ERJ3GEYJ 101 V (100) | T | 93.8/15.3 |
| R961 | 7030003320 | S.RES ERJ3GEYJ 101 V (100) | B | 92.8/15.4 |
| R962 | 7030003320 | S.RES ERJ3GEYJ 101 V (100) | T | 91.8/15.3 |
| R963 | 7030003320 | S.RES ERJ3GEYJ 101 V (100) | B | 90.8/15.4 |
| R964 | 7030003320 | S.RES ERJ3GEYJ 101 V (100) | T | 89.8/15.3 |
| R966 | 7030003320 | S.RES ERJ3GEYJ 101 V (100) | T | 87.8/15.3 |
| R967 | 7030003320 | S.RES ERJ3GEYJ 101 V (100) | B | 86.8/15.4 |
| R968 | 7030003320 | S.RES ERJ3GEYJ 101 V (100) | T | 85.8/15.3 |
| R969 | 7030003320 | S.RES ERJ3GEYJ 101 V (100) | B | 84.8/15.4 |
| R970 | 7030003320 | S.RES ERJ3GEYJ 101 V (100) | T | 83.8/15.3 |
| R971 | 7030003320 | S.RES ERJ3GEYJ 101 V (100) | B | 82.8/15.4 |
| R972 | 7030003320 | S.RES ERJ3GEYJ 101 V (100) | T | 81.8/15.4 |
| R973 | 7030003320 | S.RES ERJ3GEYJ 101 V (100) | B | 80.8/15.4 |
| R974 | 7030003320 | S.RES ERJ3GEYJ 101 V (100) | T | 79.8/15.4 |
| R975 | 7030003320 | S.RES ERJ3GEYJ 101 V (100) | B | 78.8/15.4 |
| R976 | 7030003320 | S.RES ERJ3GEYJ 101 V (100) | T | 77.8/15.4 |
| R977 | 7030003320 | S.RES ERJ3GEYJ 101 V (100) | B | 76.8/15.4 |
| R978 | 7030003320 | S.RES ERJ3GEYJ 101 V (100) | T | 75.8/15.4 |
| R979 | 7030003320 | S.RES ERJ3GEYJ 101 V (100) | B | 74.8/15.4 |
| | | | | |
| C1 | 4030006880 | S.CER C1608 JB 1H 472K-T | B | 207.5/109.2 |
| C2 | 4030006880 | S.CER C1608 JB 1H 472K-T | T | 225.7/110.3 |
| C3 | 4030006880 | S.CER C1608 JB 1H 472K-T | B | 220.4/106.6 |
| C4 | 4030006880 | S.CER C1608 JB 1H 472K-T | T | 204.7/110.3 |
| C5 | 4030006880 | S.CER C1608 JB 1H 472K-T | T | 222.2/110.3 |
| C6 | 4030006880 | S.CER C1608 JB 1H 472K-T | T | 211.7/110.3 |
| C7 | 4030006880 | S.CER C1608 JB 1H 472K-T | T | 215.2/110.3 |
| C8 | 4030006880 | S.CER C1608 JB 1H 472K-T | T | 200.4/110.3 |
| C9 | 4030006880 | S.CER C1608 JB 1H 472K-T | T | 193.4/110.3 |
| C10 | 4030006880 | S.CER C1608 JB 1H 472K-T | T | 196.9/110.3 |
| C11 | 4030006880 | S.CER C1608 JB 1H 472K-T | B | 168/106.8 |
| C12 | 4030006880 | S.CER C1608 JB 1H 472K-T | T | 183.7/110.3 |
| C13 | 4030006880 | S.CER C1608 JB 1H 472K-T | B | 178.4/106.6 |
| C14 | 4030006880 | S.CER C1608 JB 1H 472K-T | T | 162.7/110.3 |
| C15 | 4030006880 | S.CER C1608 JB 1H 472K-T | T | 180.2/110.3 |
| C16 | 4030006880 | S.CER C1608 JB 1H 472K-T | T | 169.7/110.3 |
| C17 | 4030006880 | S.CER C1608 JB 1H 472K-T | T | 173.2/110.3 |
| C18 | 4030006880 | S.CER C1608 JB 1H 472K-T | T | 158.4/110.3 |
| C19 | 4030006880 | S.CER C1608 JB 1H 472K-T | T | 151.4/110.3 |
| C20 | 4030006880 | S.CER C1608 JB 1H 472K-T | T | 154.9/110.3 |
| C21 | 4030006880 | S.CER C1608 JB 1H 472K-T | B | 163.9/96.8 |
| C22 | 4030006880 | S.CER C1608 JB 1H 472K-T | B | 174.7/98 |
| C23 | 4030006880 | S.CER C1608 JB 1H 472K-T | B | 167.1/98.1 |
| C24 | 4030006880 | S.CER C1608 JB 1H 472K-T | B | 145.1/106.9 |
| C25 | 4510008540 | S.ELE EEE1CA100SR | T | 218.3/83.6 |
| C26 | 4510008540 | S.ELE EEE1CA100SR | T | 233.7/83.5 |
| C28 | 4510008540 | S.ELE EEE1CA100SR | T | 191.1/80.5 |
| C29 | 4510008540 | S.ELE EEE1CA100SR | T | 184.9/80.5 |
| C30 | 4510008540 | S.ELE EEE1CA100SR | T | 184.2/92.3 |
| C31 | 4030011600 | S.CER C1608 JB 1E 104K-T | T | 187.7/74.5 |
| C32 | 4510008540 | S.ELE EEE1CA100SR | T | 179/82.1 |
| C33 | 4510008540 | S.ELE EEE1CA100SR | T | 178.9/87 |
| C34 | 4030012600 | S.CER C2012 JB 1A 105M-T | T | 189/92.3 |
| C35 | 4030012600 | S.CER C2012 JB 1A 105M-T | T | 179.4/92.4 |
| C36 | 4510008500 | S.ELE EEE1CA101WP | T | 222.1/104.5 |
| C37 | 4510008540 | S.ELE EEE1CA100SR | T | 229.5/107.3 |
| C38 | 4510008500 | S.ELE EEE1CA101WP | T | 174.3/104.1 |
| C39 | 4510008540 | S.ELE EEE1CA100SR | T | 181.9/104.7 |
| C40 | 4510008540 | S.ELE EEE1CA100SR | T | 190/63.4 |
| C41 | 4510008540 | S.ELE EEE1CA100SR | T | 184/63.4 |
| C42 | 4030011600 | S.CER C1608 JB 1E 104K-T | T | 187.7/77.1 |
| C43 | 4030011600 | S.CER C1608 JB 1E 104K-T | T | 194.5/74.5 |
| C44 | 4030011600 | S.CER C1608 JB 1E 104K-T | T | 180.9/77.1 |
| C45 | 4030012600 | S.CER C2012 JB 1A 105M-T | T | 193.3/83.8 |
| C46 | 4030012600 | S.CER C2012 JB 1A 105M-T | T | 193.3/90.9 |
| C50 | 4030006880 | S.CER C1608 JB 1H 472K-T | B | 139.6/118.5 |

M.=Mounted side (T: Mounted on the Top side, B: Mounted on the Bottom side)
S.=Surface mount

## [MAIN UNIT]

| REF NO. | ORDER NO. | DESCRIPTION | M. | H/V LOCATION |
|---|---|---|---|---|
| C51 | 4010005380 | CER HM13SJ YB 472K 500V | | |
| C52 | 4030006880 | S.CER C1608 JB 1H 472K-T | B | 114.5/98.6 |
| C53 | 4030006880 | S.CER C1608 JB 1H 472K-T | B | 116.2/96.3 |
| C54 | 4030006880 | S.CER C1608 JB 1H 472K-T | B | 79.9/123.6 |
| C55 | 4030006880 | S.CER C1608 JB 1H 472K-T | B | 79.9/118.7 |
| C56 | 4030006880 | S.CER C1608 JB 1H 472K-T | B | 92.8/106.5 |
| C57 | 4030010760 | S.CER C1608 CH 1H 331J-T | T | 179.5/70.9 |
| C58 | 4030010760 | S.CER C1608 CH 1H 331J-T | T | 194.6/70.7 |
| C61 | 4030012600 | S.CER C2012 JB 1A 105M-T | T | 119.1/77.8 |
| C62 | 4030012600 | S.CER C2012 JB 1A 105M-T | T | 119.1/76 |
| C65 | 4030012600 | S.CER C2012 JB 1A 105M-T | B | 108.1/76.2 |
| C68 | 4030006860 | S.CER C1608 JB 1H 102K-T | B | 126.4/101.9 |
| C69 | 4030011600 | S.CER C1608 JB 1E 104K-T | T | 121.5/90.8 |
| C70 | 4030011600 | S.CER C1608 JB 1E 104K-T | B | 122.1/89.4 |
| C71 | 4030011600 | S.CER C1608 JB 1E 104K-T | B | 136.8/96.8 |
| C80 | 4030007130 | S.CER C1608 CH 1H 101J-T | B | 59.2/122.2 |
| C100 | 4030011600 | S.CER C1608 JB 1E 104K-T | B | 208.4/91 |
| C101 | 4030011600 | S.CER C1608 JB 1E 104K-T | T | 213.4/87.4 |
| C103 | 4510008550 | S.ELE EEE1HA010SR | T | 210.7/83.6 |
| C105 | 4030011600 | S.CER C1608 JB 1E 104K-T | B | 201.6/91 |
| C106 | 4030011600 | S.CER C1608 JB 1E 104K-T | T | 206.6/87.4 |
| C108 | 4510008550 | S.ELE EEE1HA010SR | T | 202.9/83.6 |
| C110 | 4510008540 | S.ELE EEE1CA100SR | T | 209.8/63.3 |
| C113 | 4510008540 | S.ELE EEE1CA100SR | T | 209.8/73.8 |
| C115 | 4510008540 | S.ELE EEE1CA100SR | T | 209.8/48.7 |
| C116 | 4510008540 | S.ELE EEE1CA100SR | T | 209.8/38.1 |
| C117 | 4510009120 | S.ELE EEE1VA2R2NR | T | 215.7/73.8 |
| C118 | 4510009120 | S.ELE EEE1VA2R2NR | T | 203.9/73.8 |
| C120 | 4510008540 | S.ELE EEE1CA100SR | T | 223.6/50.7 |
| C121 | 4510008540 | S.ELE EEE1CA100SR | T | 214.3/58 |
| C122 | 4510008540 | S.ELE EEE1CA100SR | T | 204.7/58 |
| C123 | 4510008550 | S.ELE EEE1HA010SR | T | 227/56.1 |
| C124 | 4510008550 | S.ELE EEE1HA010SR | T | 227.1/60.9 |
| C125 | 4510008540 | S.ELE EEE1CA100SR | T | 218.8/67 |
| C126 | 4510008540 | S.ELE EEE1CA100SR | T | 223.6/67 |
| C127 | 4510008550 | S.ELE EEE1HA010SR | T | 234.1/60.9 |
| C128 | 4510008550 | S.ELE EEE1HA010SR | T | 233.3/56.1 |
| C129 | 4030008650 | S.CER C1608 JB 1H 332K-T | T | 215.6/67.3 |
| C130 | 4030008650 | S.CER C1608 JB 1H 332K-T | T | 203.8/67.3 |
| C131 | 4030012600 | S.CER C2012 JB 1A 105M-T | T | 220.3/52 |
| C132 | 4030012600 | S.CER C2012 JB 1A 105M-T | T | 218.5/52 |
| C133 | 4030008880 | S.CER C1608 JB 1H 223K-T | T | 232.2/66.6 |
| C134 | 4030008950 | S.CER C2012 JB 1C 823K-T | T | 231.3/69 |
| C135 | 4030008880 | S.CER C1608 JB 1H 223K-T | T | 234.1/52.3 |
| C136 | 4030008950 | S.CER C2012 JB 1C 823K-T | T | 232.4/50.1 |
| C140 | 4510008550 | S.ELE EEE1HA010SR | T | 249.6/35.6 |
| C141 | 4510008190 | ELE EEUFC1E222S | | |
| C142 | 4510009080 | S.ELE EEE1HAR22SR | T | 253.9/59.1 |
| C143 | 4510008500 | S.ELE EEE1CA101WP | T | 253.3/67.9 |
| C144 | 4510008180 | ELE EEUFC1E102S | | |
| C145 | 4510008180 | ELE EEUFC1E102S | | |
| C146 | 4030011600 | S.CER C1608 JB 1E 104K-T | B | 252.2/101.3 |
| C147 | 4030011600 | S.CER C1608 JB 1E 104K-T | B | 242.4/107.8 |
| C148 | 4030006880 | S.CER C1608 JB 1H 472K-T | B | 247.8/97.2 |
| C149 | 4030006880 | S.CER C1608 JB 1H 472K-T | B | 252.2/95.4 |
| C150 | 4030006880 | S.CER C1608 JB 1H 472K-T | B | 239.9/97.2 |
| C151 | 4030011600 | S.CER C1608 JB 1E 104K-T | T | 228.6/73.1 |
| C152 | 4030011600 | S.CER C1608 JB 1E 104K-T | T | 233.4/45.5 |
| C180 | 4510009010 | S.ELE EEE1AA221P | T | 188.5/50.4 |
| C181 | 4510008540 | S.ELE EEE1CA100SR | T | 209.5/58 |
| C182 | 4510008540 | S.ELE EEE1CA100SR | T | 199.9/58 |
| C183 | 4510008540 | S.ELE EEE1CA100SR | T | 194.4/57.3 |
| C184 | 4510008540 | S.ELE EEE1CA100SR | T | 195.8/52.5 |
| C185 | 4510008540 | S.ELE EEE1CA100SR | T | 195.8/47.7 |
| C186 | 4510008540 | S.ELE EEE1CA100SR | T | 180.2/50.5 |
| C187 | 4030011600 | S.CER C1608 JB 1E 104K-T | T | 183.3/39.5 |
| C188 | 4510008540 | S.ELE EEE1CA100SR | T | 194.4/42.8 |
| C189 | 4510008540 | S.ELE EEE1CA100SR | T | 180.2/45.6 |
| C190 | 4030011340 | S.CER C1608 CH 1H 471J-T | T | 194.6/33.4 |
| C191 | 4030012610 | S.CER C2012 JB 1C 474K-T | T | 191.1/37.7 |
| C192 | 4030011340 | S.CER C1608 CH 1H 471J-T | T | 180.4/35.4 |
| C193 | 4510008540 | S.ELE EEE1CA100SR | T | 186.8/31.6 |
| C194 | 4030012600 | S.CER C2012 JB 1A 105M-T | T | 180.9/59.4 |
| C195 | 4030012600 | S.CER C2012 JB 1A 105M-T | T | 180.7/54.6 |
| C196 | 4510008500 | S.ELE EEE1CA101WP | T | 176.1/36.5 |
| C197 | 4510008500 | S.ELE EEE1CA101WP | T | 199.7/31.9 |
| C198 | 4030011600 | S.CER C1608 JB 1E 104K-T | T | 125.6/95.8 |
| C200 | 4510008540 | S.ELE EEE1CA100SR | T | 153.3/80.5 |
| C201 | 4510008540 | S.ELE EEE1CA100SR | T | 160.5/80 |
| C203 | 4510008550 | S.ELE EEE1HA010SR | T | 170.6/70.7 |
| C204 | 4510008550 | S.ELE EEE1HA010SR | T | 142.1/70.9 |
| C205 | 4030011600 | S.CER C1608 JB 1E 104K-T | B | 148.2/71.8 |
| C206 | 4030009970 | S.CER C1608 JB 1H 182K-T | T | 192/33.4 |
| C207 | 4030009970 | S.CER C1608 JB 1H 182K-T | T | 181.1/33.6 |
| C208 | 4030011600 | S.CER C1608 JB 1E 104K-T | T | 219/42.5 |
| C209 | 4030011600 | S.CER C1608 JB 1E 104K-T | B | 244/25.5 |
| C210 | 4510008550 | S.ELE EEE1HA010SR | T | 168.1/100.5 |
| C211 | 4510008540 | S.ELE EEE1CA100SR | T | 160.5/84.8 |
| C212 | 4510008530 | S.ELE EEE1HA2R2SR | T | 169.7/94.9 |
| C213 | 4030017840 | S.CER C2012 CH 1H 222J-T | T | 166.7/91.5 |
| C214 | 4510008540 | S.ELE EEE1CA100SR | T | 170.6/85.3 |
| C215 | 4510008550 | S.ELE EEE1HA010SR | T | 150.5/85.3 |
| C216 | 4510008550 | S.ELE EEE1HA010SR | T | 142.6/85.3 |
| C217 | 4030007120 | S.CER C1608 CH 1H 820J-T | T | 164.9/73.5 |
| C220 | 4510008550 | S.ELE EEE1HA010SR | T | 163.3/100.5 |
| C221 | 4510008540 | S.ELE EEE1CA100SR | T | 170.6/90.1 |
| C222 | 4510008530 | S.ELE EEE1HA2R2SR | T | 151.3/94.9 |
| C223 | 4030017840 | S.CER C2012 CH 1H 222J-T | T | 154.3/91.5 |
| C225 | 4510008550 | S.ELE EEE1HA010SR | T | 150.5/90.1 |
| C226 | 4510008550 | S.ELE EEE1HA010SR | T | 142.6/90.2 |
| C230 | 4510008500 | S.ELE EEE1CA101WP | T | 68.9/10.5 |
| C231 | 4510008500 | S.ELE EEE1CA101WP | T | 84.1/21.9 |
| C233 | 4510008550 | S.ELE EEE1HA010SR | T | 69.8/16.5 |
| C234 | 4030007170 | S.CER C1608 CH 1H 221J-T | T | 73/20.3 |

## [MAIN UNIT]

| REF NO. | ORDER NO. | DESCRIPTION | M. | H/V LOCATION |
|---|---|---|---|---|
| C235 | 4030011600 | S.CER C1608 JB 1E 104K-T | T | 79.1/22 |
| C241 | 4510008540 | S.ELE EEE1CA100SR | T | 232.1/28.1 |
| C242 | 4510004591 | ELE 16 ME 470 HC | | |
| C243 | 4510008500 | S.ELE EEE1CA101WP | T | 176.7/63 |
| C244 | 4030011600 | S.CER C1608 JB 1E 104K-T | T | 176/56.8 |
| C249 | 4030011600 | S.CER C1608 JB 1E 104K-T | T | 160.3/68.3 |
| C250 | 4030011600 | S.CER C1608 JB 1E 104K-T | T | 133.1/39.1 |
| C251 | 4030011600 | S.CER C1608 JB 1E 104K-T | T | 143.3/32.8 |
| C260 | 4030011600 | S.CER C1608 JB 1E 104K-T | T | 133.1/53.5 |
| C261 | 4030011600 | S.CER C1608 JB 1E 104K-T | T | 143.2/47.1 |
| C290 | 4030011600 | S.CER C1608 JB 1E 104K-T | T | 149.1/28.2 |
| C291 | 4030011600 | S.CER C1608 JB 1E 104K-T | T | 142.9/38.1 |
| C310 | 4030011600 | S.CER C1608 JB 1E 104K-T | T | 153.7/43.3 |
| C311 | 4030011600 | S.CER C1608 JB 1E 104K-T | T | 142.9/52.6 |
| C330 | 4030011600 | S.CER C1608 JB 1E 104K-T | T | 154.6/58.5 |
| C331 | 4030011600 | S.CER C1608 JB 1E 104K-T | T | 154.6/63.5 |
| C332 | 4030011600 | S.CER C1608 JB 1E 104K-T | T | 162.4/55.9 |
| C333 | 4030011600 | S.CER C1608 JB 1E 104K-T | T | 164.7/66.8 |
| C340 | 4030017810 | S.CER C1608 CH 1H 102J-T | B | 206/97 |
| C341 | 4030017810 | S.CER C1608 CH 1H 102J-T | B | 191.2/97 |
| C342 | 4030011600 | S.CER C1608 JB 1E 104K-T | B | 199.8/26.2 |
| C343 | 4030007130 | S.CER C1608 CH 1H 101J-T | B | 211.8/97 |
| C344 | 4510008590 | S.ELE EEE1AA101SP | T | 209.7/30.6 |
| C351 | 4510008540 | S.ELE EEE1CA100SR | T | 132.4/89.7 |
| C352 | 4030011600 | S.CER C1608 JB 1E 104K-T | T | 127.1/84 |
| C360 | 4030017810 | S.CER C1608 CH 1H 102J-T | B | 153.8/96.9 |
| C361 | 4030017810 | S.CER C1608 CH 1H 102J-T | B | 141.8/92.7 |
| C362 | 4030011600 | S.CER C1608 JB 1E 104K-T | B | 144.7/27.5 |
| C363 | 4030007130 | S.CER C1608 CH 1H 101J-T | B | 157.1/96.9 |
| C364 | 4510008590 | S.ELE EEE1AA101SP | T | 152.8/14.7 |
| C380 | 4030017810 | S.CER C1608 CH 1H 102J-T | B | 27.6/37.6 |
| C381 | 4030017810 | S.CER C1608 CH 1H 102J-T | B | 27.7/52.4 |
| C383 | 4030007130 | S.CER C1608 CH 1H 101J-T | B | 16.5/52.2 |
| C384 | 4510008590 | S.ELE EEE1AA101SP | T | 92.9/45.8 |
| C400 | 4030006880 | S.CER C1608 JB 1H 472K-T | T | 240.5/11.7 |
| C401 | 4030006880 | S.CER C1608 JB 1H 472K-T | B | 234.8/15.5 |
| C402 | 4030006880 | S.CER C1608 JB 1H 472K-T | B | 238.1/15.5 |
| C403 | 4030006880 | S.CER C1608 JB 1H 472K-T | T | 230.5/16 |
| C404 | 4030006880 | S.CER C1608 JB 1H 472K-T | T | 231.9/13.1 |
| C405 | 4030006880 | S.CER C1608 JB 1H 472K-T | T | 43.2/12.9 |
| C406 | 4030006880 | S.CER C1608 JB 1H 472K-T | T | 31.1/15.3 |
| C407 | 4030006880 | S.CER C1608 JB 1H 472K-T | T | 43.2/11.6 |
| C408 | 4030006880 | S.CER C1608 JB 1H 472K-T | T | 32/12.6 |
| C409 | 4030006880 | S.CER C1608 JB 1H 472K-T | T | 30.7/12.6 |
| C410 | 4030006880 | S.CER C1608 JB 1H 472K-T | T | 14.7/41 |
| C411 | 4030006880 | S.CER C1608 JB 1H 472K-T | B | 14.7/39.6 |
| C412 | 4030006880 | S.CER C1608 JB 1H 472K-T | T | 14.7/38 |
| C413 | 4030006880 | S.CER C1608 JB 1H 472K-T | B | 14.7/36.4 |
| C414 | 4030006880 | S.CER C1608 JB 1H 472K-T | B | 12.7/33 |
| C415 | 4030006880 | S.CER C1608 JB 1H 472K-T | T | 12.8/32 |
| C416 | 4030006880 | S.CER C1608 JB 1H 472K-T | B | 12.8/31 |
| C418 | 4030006880 | S.CER C1608 JB 1H 472K-T | B | 12/28.2 |
| C430 | 4030006880 | S.CER C1608 JB 1H 472K-T | B | 9/68.9 |
| C431 | 4030006880 | S.CER C1608 JB 1H 472K-T | B | 9/70.9 |
| C432 | 4030006880 | S.CER C1608 JB 1H 472K-T | B | 9/72.9 |
| C435 | 4030006880 | S.CER C1608 JB 1H 472K-T | B | 9/74.5 |
| C440 | 4030006880 | S.CER C1608 JB 1H 472K-T | T | 166.2/13.5 |
| C441 | 4030006880 | S.CER C1608 JB 1H 472K-T | T | 158.9/13.1 |
| C442 | 4030006880 | S.CER C1608 JB 1H 472K-T | T | 162.6/15.7 |
| C450 | 4030006880 | S.CER C1608 JB 1H 472K-T | B | 250.3/14.2 |
| C451 | 4030006880 | S.CER C1608 JB 1H 472K-T | T | 241.8/10.8 |
| C452 | 4030006880 | S.CER C1608 JB 1H 472K-T | B | 244/23.7 |
| C453 | 4030006880 | S.CER C1608 JB 1H 472K-T | B | 244/27.3 |
| C454 | 4030006880 | S.CER C1608 JB 1H 472K-T | B | 244.1/29 |
| C455 | 4030006880 | S.CER C1608 JB 1H 472K-T | B | 244.1/32.3 |
| C456 | 4030006880 | S.CER C1608 JB 1H 472K-T | B | 250.4/39.6 |
| C460 | 4510008550 | S.ELE EEE1HA010SR | T | 142.1/80.5 |
| C461 | 4510008550 | S.ELE EEE1HA010SR | T | 170.6/75.7 |
| C464 | 4510008540 | S.ELE EEE1CA100SR | T | 153.3/75.7 |
| C465 | 4030011600 | S.CER C1608 JB 1E 104K-T | B | 144.1/75.4 |
| C466 | 4030011600 | S.CER C1608 JB 1E 104K-T | B | 148.2/75.4 |
| C467 | 4030012600 | S.CER C2012 JB 1A 105M-T | T | 139.3/76.4 |
| C469 | 4510008550 | S.ELE EEE1HA010SR | T | 170.6/80.5 |
| C470 | 4510008550 | S.ELE EEE1HA010SR | T | 153.3/70.9 |
| C480 | 4550007320 | S.TAN F930J226MAABMA | B | 216.6/32.3 |
| C481 | 4550007320 | S.TAN F930J226MAABMA | B | 208.7/31.3 |
| C483 | 4550007320 | S.TAN F930J226MAABMA | B | 156/16.2 |
| C484 | 4550007320 | S.TAN F930J226MAABMA | B | 163.9/15.2 |
| C486 | 4550007320 | S.TAN F930J226MAABMA | B | 93.6/55.4 |
| C487 | 4550007320 | S.TAN F930J226MAABMA | B | 93.5/47.5 |
| C489 | 4030011600 | S.CER C1608 JB 1E 104K-T | B | 220.9/31.1 |
| C490 | 4030011600 | S.CER C1608 JB 1E 104K-T | B | 150.2/13.6 |
| C491 | 4030011600 | S.CER C1608 JB 1E 104K-T | B | 89.8/57 |
| C492 | 4030006880 | S.CER C1608 JB 1H 472K-T | T | 207.6/13 |
| C493 | 4510008540 | S.ELE EEE1CA100SR | T | 205.4/3.8 |
| C494 | 4510004591 | ELE 16 ME 470 HC | | |
| C495 | 4030011600 | S.CER C1608 JB 1E 104K-T | B | 26.3/123 |
| C496 | 4030011600 | S.CER C1608 JB 1E 104K-T | B | 5.7/119.9 |
| C497 | 4030011600 | S.CER C1608 JB 1E 104K-T | T | 12.7/122.5 |
| C498 | 4510004591 | ELE 16 ME 470 HC | | |
| C499 | 4030011600 | S.CER C1608 JB 1E 104K-T | B | 229.4/26.6 |
| C501 | 4030011600 | S.CER C1608 JB 1E 104K-T | T | 19.2/58.3 |
| C502 | 4030010020 | S.CER C1608 JB 1H 122K-T | T | 23.7/58.3 |
| C503 | 4030009980 | S.CER C1608 JB 1H 152K-T | T | 22.2/60.9 |
| C505 | 4030011330 | S.CER C1608 CH 1H 391J-T | T | 25.2/58.3 |
| C506 | 4030011600 | S.CER C1608 JB 1E 104K-T | T | 26/64.4 |
| C507 | 4510008540 | S.ELE EEE1CA100SR | T | 29.1/66.3 |
| C508 | 4510008540 | S.ELE EEE1CA100SR | T | 16.1/66.3 |
| C509 | 4030011600 | S.CER C1608 JB 1E 104K-T | T | 19.2/66.5 |
| C510 | 4030008470 | S.CER C1608 JB 1H 272K-T | T | 20.7/72.4 |
| C511 | 4030011280 | S.CER C1608 CH 1H 271J-T | T | 25.2/72.4 |
| C512 | 4030011600 | S.CER C1608 JB 1E 104K-T | T | 26/76.8 |
| C513 | 4510008540 | S.ELE EEE1CA100SR | T | 29.1/77.7 |
| C514 | 4030011600 | S.CER C1608 JB 1E 104K-T | T | 19.2/78.4 |

M.=Mounted side (T: Mounted on the Top side, B: Mounted on the Bottom side)
S.=Surface mount

## [MAIN UNIT]

| REF NO. | ORDER NO. | DESCRIPTION | M. | H/V LOCATION |
|---|---|---|---|---|
| C515 | 4510008540 | S.ELE EEE1CA100SR | T | 16.1/78.2 |
| C516 | 4030006860 | S.CER C1608 JB 1H 102K-T | T | 22.7/87.5 |
| C517 | 4030011600 | S.CER C1608 JB 1E 104K-T | T | 20.3/91.9 |
| C518 | 4030011600 | S.CER C1608 JB 1E 104K-T | T | 25.3/87.5 |
| C519 | 4030011600 | S.CER C1608 JB 1E 104K-T | T | 26.6/87.5 |
| C520 | 4510008540 | S.ELE EEE1CA100SR | T | 30.4/86.7 |
| C521 | 4030011600 | S.CER C1608 JB 1E 104K-T | T | 24/87.5 |
| C522 | 4030011600 | S.CER C1608 JB 1E 104K-T | B | 18.6/91.9 |
| C523 | 4030011600 | S.CER C1608 JB 1E 104K-T | B | 21.6/91.9 |
| C524 | 4510008540 | S.ELE EEE1CA100SR | T | 29.7/97 |
| C525 | 4030006880 | S.CER C1608 JB 1H 472K-T | T | 26.1/91.9 |
| C526 | 4030011600 | S.CER C1608 JB 1E 104K-T | B | 26.1/87.7 |
| C527 | 4030006880 | S.CER C1608 JB 1H 472K-T | B | 29.5/91.9 |
| C528 | 4030011600 | S.CER C1608 JB 1E 104K-T | B | 29.5/94.9 |
| C529 | 4030011600 | S.CER C1608 JB 1E 104K-T | B | 33.5/87.1 |
| C530 | 4030011600 | S.CER C1608 JB 1E 104K-T | B | 33.5/98.8 |
| C531 | 4030006880 | S.CER C1608 JB 1H 472K-T | B | 37.2/94.6 |
| C532 | 4030006880 | S.CER C1608 JB 1H 472K-T | B | 37.2/91.3 |
| C533 | 4030006880 | S.CER C1608 JB 1H 472K-T | B | 46.3/95.1 |
| C534 | 4030006880 | S.CER C1608 JB 1H 472K-T | B | 46.3/82 |
| C535 | 4030006880 | S.CER C1608 JB 1H 472K-T | B | 47.3/88.5 |
| C536 | 4030011600 | S.CER C1608 JB 1E 104K-T | B | 42.7/91.4 |
| C537 | 4030006880 | S.CER C1608 JB 1H 472K-T | B | 51.7/82 |
| C538 | 4030008920 | S.CER C1608 JB 1H 473K-T | B | 50.5/85.7 |
| C539 | 4030011600 | S.CER C1608 JB 1E 104K-T | T | 52.2/84.4 |
| C540 | 4510008540 | S.ELE EEE1CA100SR | T | 49.1/84.5 |
| C541 | 4030011600 | S.CER C1608 JB 1E 104K-T | B | 49.9/95.1 |
| C544 | 4030009530 | S.CER C1608 CH 1H 030B-T | T | 88.8/94.2 |
| C545 | 4030011600 | S.CER C1608 JB 1E 104K-T | T | 131.8/108 |
| C546 | 4030011340 | S.CER C1608 CH 1H 471J-T | B | 69.8/90.7 |
| C548 | 4030011600 | S.CER C1608 JB 1E 104K-T | T | 128.7/102.3 |
| C550 | 4510008540 | S.ELE EEE1CA100SR | T | 127.4/108 |
| C551 | 4030006880 | S.CER C1608 JB 1H 472K-T | B | 101.6/91.6 |
| C552 | 4030006860 | S.CER C1608 JB 1H 102K-T | B | 106.4/82.7 |
| C553 | 4030011770 | S.CER C1608 CH 1H 060B-T | B | 104.8/82.7 |
| C554 | 4030011600 | S.CER C1608 JB 1E 104K-T | B | 103/79.3 |
| C555 | 4030007030 | S.CER C1608 CH 1H 150J-T | B | 97.9/80.1 |
| C556 | 4030006880 | S.CER C1608 JB 1H 472K-T | B | 102.9/76.5 |
| C558 | 4030007040 | S.CER C1608 CH 1H 180J-T | T | 81.9/69.4 |
| C559 | 4030006880 | S.CER C1608 JB 1H 472K-T | T | 108.4/67.1 |
| C560 | 4030007080 | S.CER C1608 CH 1H 390J-T | T | 108.4/64.2 |
| C561 | 4030006880 | S.CER C1608 JB 1H 472K-T | T | 105/71.3 |
| C562 | 4030006860 | S.CER C1608 JB 1H 102K-T | B | 105.6/64.2 |
| C563 | 4030011600 | S.CER C1608 JB 1E 104K-T | T | 98.8/71.3 |
| C564 | 4030007080 | S.CER C1608 CH 1H 390J-T | B | 75.9/67.2 |
| C565 | 4030007130 | S.CER C1608 CH 1H 101J-T | B | 72.5/68.9 |
| C566 | 4030007120 | S.CER C1608 CH 1H 820J-T | B | 69.4/68.5 |
| C567 | 4030007090 | S.CER C1608 CH 1H 470J-T | B | 69.4/70.3 |
| C568 | 4030007130 | S.CER C1608 CH 1H 101J-T | B | 67.1/69.1 |
| C569 | 4030011600 | S.CER C1608 JB 1E 104K-T | B | 62.8/68.1 |
| C570 | 4030006900 | S.CER C1608 JB 1H 103K-T | B | 62.9/59.2 |
| C571 | 4030011600 | S.CER C1608 JB 1E 104K-T | B | 58.8/66 |
| C572 | 4030006900 | S.CER C1608 JB 1H 103K-T | B | 60/58.4 |
| C573 | 4030011600 | S.CER C1608 JB 1E 104K-T | B | 66.7/59.2 |
| C574 | 4030011600 | S.CER C1608 JB 1E 104K-T | B | 53.3/57 |
| C576 | 4610001590 | S.TRI TZC3R100A110R00 | T | 95.5/95.8 |
| C577 | 4030011600 | S.CER C1608 JB 1E 104K-T | B | 54.6/63 |
| C578 | 4030007100 | S.CER C1608 CH 1H 560J-T | B | 91.4/74.5 |
| C579 | 4030006980 | S.CER C1608 CH 1H 070D-T | B | 89.2/76.8 |
| C580 | 4030007100 | S.CER C1608 CH 1H 560J-T | B | 93.2/76.5 |
| C581 | 4030007050 | S.CER C1608 CH 1H 220J-T | B | 22.6/69.5 |
| C582 | 4030007050 | S.CER C1608 CH 1H 220J-T | T | 20.7/84.6 |
| C583 | 4030011600 | S.CER C1608 JB 1E 104K-T | T | 27.2/81.6 |
| C584 | 4030009650 | S.CER C1608 CH 1H 240J-T | B | 104.5/67.3 |
| C585 | 4030006980 | S.CER C1608 CH 1H 070D-T | B | 102.9/67.3 |
| C586 | 4030007070 | S.CER C1608 CH 1H 330J-T | B | 98.5/70.2 |
| C587 | 4030007010 | S.CER C1608 CH 1H 100D-T | B | 97/64.9 |
| C588 | 4030007060 | S.CER C1608 CH 1H 270J-T | B | 96.5/70.2 |
| C589 | 4030007020 | S.CER C1608 CH 1H 120J-T | B | 63.8/72.8 |
| C590 | 4030007100 | S.CER C1608 CH 1H 560J-T | B | 62.1/74.5 |
| C601 | 4030006860 | S.CER C1608 JB 1H 102K-T | B | 40.9/52.4 |
| C602 | 4030006860 | S.CER C1608 JB 1H 102K-T | B | 42.7/52.4 |
| C603 | 4030011600 | S.CER C1608 JB 1E 104K-T | B | 40.9/49.1 |
| C604 | 4030007140 | S.CER C1608 CH 1H 121J-T | B | 38.1/49.8 |
| C605 | 4030010760 | S.CER C1608 CH 1H 331J-T | B | 38.1/48 |
| C606 | 4030007160 | S.CER C1608 CH 1H 181J-T | B | 33.8/45.5 |
| C607 | 4030007060 | S.CER C1608 CH 1H 270J-T | B | 35.6/45.5 |
| C608 | 4030010760 | S.CER C1608 CH 1H 331J-T | B | 38.1/46.2 |
| C609 | 4030007090 | S.CER C1608 CH 1H 470J-T | B | 38.1/40.8 |
| C610 | 4030007160 | S.CER C1608 CH 1H 181J-T | B | 35.6/41.5 |
| C611 | 4030007060 | S.CER C1608 CH 1H 270J-T | B | 33.8/41.5 |
| C612 | 4030007140 | S.CER C1608 CH 1H 121J-T | B | 38.1/37.1 |
| C613 | 4030010760 | S.CER C1608 CH 1H 331J-T | B | 38.1/39 |
| C614 | 4030006860 | S.CER C1608 JB 1H 102K-T | B | 40.9/34.5 |
| C615 | 4030011600 | S.CER C1608 JB 1E 104K-T | B | 40.9/37.8 |
| C616 | 4030006860 | S.CER C1608 JB 1H 102K-T | B | 42.7/34.5 |
| C617 | 4030010040 | S.CER C1608 JB 1H 561K-T | B | 51.7/52.4 |
| C618 | 4030010760 | S.CER C1608 CH 1H 331J-T | B | 53.5/52.4 |
| C619 | 4030011600 | S.CER C1608 JB 1E 104K-T | B | 51.7/49.1 |
| C620 | 4030010760 | S.CER C1608 CH 1H 331J-T | B | 48.9/49.8 |
| C621 | 4030007080 | S.CER C1608 CH 1H 390J-T | B | 48.9/48 |
| C622 | 4030007080 | S.CER C1608 CH 1H 390J-T | B | 44.5/45.5 |
| C623 | 4030010760 | S.CER C1608 CH 1H 331J-T | B | 46.4/45.5 |
| C624 | 4030007090 | S.CER C1608 CH 1H 470J-T | B | 48.9/46.2 |
| C625 | 4030010760 | S.CER C1608 CH 1H 331J-T | B | 48.9/40.8 |
| C626 | 4030007080 | S.CER C1608 CH 1H 390J-T | B | 46.4/41.5 |
| C627 | 4030010760 | S.CER C1608 CH 1H 331J-T | B | 44.6/41.5 |
| C628 | 4030007080 | S.CER C1608 CH 1H 390J-T | B | 48.9/37.1 |
| C629 | 4030010760 | S.CER C1608 CH 1H 331J-T | B | 48.9/39 |
| C630 | 4030010760 | S.CER C1608 CH 1H 331J-T | B | 51.7/34.5 |
| C631 | 4030011600 | S.CER C1608 JB 1E 104K-T | B | 51.7/37.8 |
| C632 | 4030010040 | S.CER C1608 JB 1H 561K-T | B | 53.5/34.5 |
| C633 | 4030010040 | S.CER C1608 JB 1H 561K-T | B | 62.5/52.4 |
| C634 | 4030011330 | S.CER C1608 CH 1H 391J-T | B | 64.3/52.4 |

## [MAIN UNIT]

| REF NO. | ORDER NO. | DESCRIPTION | M. | H/V LOCATION |
|---|---|---|---|---|
| C635 | 4030011600 | S.CER C1608 JB 1E 104K-T | B | 62.5/49.1 |
| C636 | 4030007160 | S.CER C1608 CH 1H 181J-T | B | 59.7/49.8 |
| C637 | 4030007070 | S.CER C1608 CH 1H 330J-T | B | 59.7/48 |
| C638 | 4030007030 | S.CER C1608 CH 1H 150J-T | B | 55.4/45.5 |
| C639 | 4030007120 | S.CER C1608 CH 1H 820J-T | B | 57.2/45.5 |
| C640 | 4030007100 | S.CER C1608 CH 1H 560J-T | B | 59.7/46.2 |
| C641 | 4030007140 | S.CER C1608 CH 1H 121J-T | B | 59.7/40.8 |
| C642 | 4030007030 | S.CER C1608 CH 1H 150J-T | B | 57.2/41.5 |
| C643 | 4030007120 | S.CER C1608 CH 1H 820J-T | B | 55.4/41.5 |
| C644 | 4030007070 | S.CER C1608 CH 1H 330J-T | B | 59.7/37.1 |
| C645 | 4030007160 | S.CER C1608 CH 1H 181J-T | B | 59.7/39 |
| C646 | 4030011330 | S.CER C1608 CH 1H 391J-T | B | 62.5/34.5 |
| C647 | 4030011600 | S.CER C1608 JB 1E 104K-T | B | 62.5/37.8 |
| C648 | 4030017800 | S.CER C1608 CH 1H 561J-T | B | 64.3/34.5 |
| C649 | 4030010760 | S.CER C1608 CH 1H 331J-T | B | 73.4/52.4 |
| C650 | 4030007150 | S.CER C1608 CH 1H 151J-T | B | 75.2/52.4 |
| C651 | 4030011600 | S.CER C1608 JB 1E 104K-T | B | 73.4/49.1 |
| C652 | 4030007150 | S.CER C1608 CH 1H 151J-T | B | 70.5/49.8 |
| C653 | 4030007060 | S.CER C1608 CH 1H 270J-T | B | 70.5/48 |
| C654 | 4030007060 | S.CER C1608 CH 1H 270J-T | B | 66.2/45.5 |
| C655 | 4030007140 | S.CER C1608 CH 1H 121J-T | B | 68/45.5 |
| C656 | 4030007010 | S.CER C1608 CH 1H 100D-T | B | 70.5/46.2 |
| C657 | 4030007150 | S.CER C1608 CH 1H 151J-T | B | 70.5/40.8 |
| C658 | 4030007060 | S.CER C1608 CH 1H 270J-T | B | 68/41.5 |
| C659 | 4030007140 | S.CER C1608 CH 1H 121J-T | B | 66.2/41.5 |
| C660 | 4030007060 | S.CER C1608 CH 1H 270J-T | B | 70.5/37.1 |
| C661 | 4030007150 | S.CER C1608 CH 1H 151J-T | B | 70.5/39 |
| C662 | 4030007150 | S.CER C1608 CH 1H 151J-T | B | 73.3/34.5 |
| C663 | 4030011600 | S.CER C1608 JB 1E 104K-T | B | 73.3/37.8 |
| C664 | 4030010760 | S.CER C1608 CH 1H 331J-T | B | 75.2/34.5 |
| C665 | 4030007170 | S.CER C1608 CH 1H 221J-T | B | 84.2/52.4 |
| C666 | 4030007170 | S.CER C1608 CH 1H 221J-T | B | 86/52.4 |
| C667 | 4030011600 | S.CER C1608 JB 1E 104K-T | B | 84.2/49.1 |
| C668 | 4030007130 | S.CER C1608 CH 1H 101J-T | B | 81.4/49.8 |
| C669 | 4030007050 | S.CER C1608 CH 1H 220J-T | B | 81.4/48 |
| C670 | 4030007080 | S.CER C1608 CH 1H 390J-T | B | 77.1/45.5 |
| C671 | 4030007070 | S.CER C1608 CH 1H 330J-T | B | 78.9/45.5 |
| C672 | 4030007050 | S.CER C1608 CH 1H 220J-T | B | 81.4/40.8 |
| C673 | 4030007120 | S.CER C1608 CH 1H 820J-T | B | 81.4/46.2 |
| C674 | 4030007080 | S.CER C1608 CH 1H 390J-T | B | 78.9/41.5 |
| C675 | 4030007070 | S.CER C1608 CH 1H 330J-T | B | 77.1/41.5 |
| C676 | 4030007050 | S.CER C1608 CH 1H 220J-T | B | 81.4/37.1 |
| C677 | 4030007130 | S.CER C1608 CH 1H 101J-T | B | 81.4/39 |
| C678 | 4030007170 | S.CER C1608 CH 1H 221J-T | B | 84.2/34.5 |
| C679 | 4030011600 | S.CER C1608 JB 1E 104K-T | B | 84.2/37.8 |
| C680 | 4030007170 | S.CER C1608 CH 1H 221J-T | B | 86/34.5 |
| C681 | 4030007170 | S.CER C1608 CH 1H 221J-T | T | 34.3/50.7 |
| C682 | 4030007110 | S.CER C1608 CH 1H 680J-T | T | 35.6/50.7 |
| C683 | 4030011600 | S.CER C1608 JB 1E 104K-T | T | 35.6/47.9 |
| C684 | 4030007090 | S.CER C1608 CH 1H 470J-T | T | 38.3/47.1 |
| C685 | 4030007090 | S.CER C1608 CH 1H 470J-T | T | 38.3/45.8 |
| C686 | 4030007070 | S.CER C1608 CH 1H 330J-T | T | 40.4/46.4 |
| C687 | 4030007070 | S.CER C1608 CH 1H 330J-T | T | 41.7/46.4 |
| C688 | 4030007010 | S.CER C1608 CH 1H 100D-T | T | 36.1/43.5 |
| C689 | 4030007120 | S.CER C1608 CH 1H 820J-T | T | 37.4/43.5 |
| C690 | 4030007070 | S.CER C1608 CH 1H 330J-T | T | 41.7/40.5 |
| C691 | 4030007070 | S.CER C1608 CH 1H 330J-T | T | 40.4/40.5 |
| C692 | 4030007090 | S.CER C1608 CH 1H 470J-T | T | 37.8/41 |
| C693 | 4030007090 | S.CER C1608 CH 1H 470J-T | T | 37.8/39.7 |
| C694 | 4030007110 | S.CER C1608 CH 1H 680J-T | T | 34.3/36.2 |
| C695 | 4030011600 | S.CER C1608 JB 1E 104K-T | T | 35.6/39 |
| C696 | 4030007050 | S.CER C1608 CH 1H 220J-T | T | 35.6/36.2 |
| C697 | 4030007160 | S.CER C1608 CH 1H 181J-T | T | 44/51.4 |
| C698 | 4030007090 | S.CER C1608 CH 1H 470J-T | T | 44/50.1 |
| C699 | 4030011600 | S.CER C1608 JB 1E 104K-T | T | 44.6/47.9 |
| C700 | 4030007090 | S.CER C1608 CH 1H 470J-T | T | 46.8/47.1 |
| C701 | 4030007040 | S.CER C1608 CH 1H 180J-T | T | 46.8/45.8 |
| C702 | 4030007030 | S.CER C1608 CH 1H 150J-T | T | 49.3/46.4 |
| C703 | 4030007050 | S.CER C1608 CH 1H 220J-T | T | 50.7/46.4 |
| C704 | 4030006990 | S.CER C1608 CH 1H 080D-T | T | 46.4/43.5 |
| C705 | 4030007090 | S.CER C1608 CH 1H 470J-T | T | 45.1/43.5 |
| C706 | 4030007030 | S.CER C1608 CH 1H 150J-T | T | 49.3/40.5 |
| C707 | 4030007050 | S.CER C1608 CH 1H 220J-T | T | 50.7/40.5 |
| C708 | 4030007040 | S.CER C1608 CH 1H 180J-T | T | 46.8/41 |
| C709 | 4030007090 | S.CER C1608 CH 1H 470J-T | T | 46.8/39.7 |
| C710 | 4030007090 | S.CER C1608 CH 1H 470J-T | T | 43.3/36.2 |
| C711 | 4030011600 | S.CER C1608 JB 1E 104K-T | T | 44.6/39 |
| C712 | 4030007160 | S.CER C1608 CH 1H 181J-T | T | 44.6/36.2 |
| C713 | 4030007140 | S.CER C1608 CH 1H 121J-T | T | 53.6/50.7 |
| C714 | 4030007040 | S.CER C1608 CH 1H 180J-T | T | 52.3/50.7 |
| C715 | 4030011600 | S.CER C1608 JB 1E 104K-T | T | 53.6/47.9 |
| C716 | 4030007070 | S.CER C1608 CH 1H 330J-T | T | 55.8/47.1 |
| C717 | 4030007040 | S.CER C1608 CH 1H 180J-T | T | 55.8/45.8 |
| C718 | 4030007010 | S.CER C1608 CH 1H 100D-T | T | 58.4/46.4 |
| C719 | 4030007070 | S.CER C1608 CH 1H 330J-T | T | 59.7/46.4 |
| C720 | 4030007010 | S.CER C1608 CH 1H 100D-T | T | 54.1/43.5 |
| C721 | 4030007090 | S.CER C1608 CH 1H 470J-T | T | 55.4/43.5 |
| C722 | 4030007010 | S.CER C1608 CH 1H 100D-T | T | 58.4/40.5 |
| C723 | 4030007070 | S.CER C1608 CH 1H 330J-T | T | 59.7/40.5 |
| C724 | 4030007040 | S.CER C1608 CH 1H 180J-T | T | 55.8/41 |
| C725 | 4030007070 | S.CER C1608 CH 1H 330J-T | T | 55.8/39.7 |
| C726 | 4030007040 | S.CER C1608 CH 1H 180J-T | T | 52.3/36.2 |
| C727 | 4030011600 | S.CER C1608 JB 1E 104K-T | T | 53.6/39 |
| C728 | 4030007140 | S.CER C1608 CH 1H 121J-T | T | 53.6/36.2 |
| C729 | 4030007130 | S.CER C1608 CH 1H 101J-T | T | 62.6/50.7 |
| C730 | 4030007030 | S.CER C1608 CH 1H 150J-T | T | 61.3/50.7 |
| C731 | 4030011600 | S.CER C1608 JB 1E 104K-T | T | 62.6/47.9 |
| C732 | 4030007050 | S.CER C1608 CH 1H 220J-T | T | 64.8/47.1 |
| C733 | 4030007020 | S.CER C1608 CH 1H 120J-T | T | 64.8/45.8 |
| C734 | 4030009500 | S.CER C1608 CH 1H 0R5B-T | T | 67.4/46.4 |
| C735 | 4030007050 | S.CER C1608 CH 1H 220J-T | T | 68.7/46.4 |
| C736 | 4030006980 | S.CER C1608 CH 1H 070D-T | T | 63.1/43.5 |
| C737 | 4030007050 | S.CER C1608 CH 1H 220J-T | T | 64.4/43.5 |
| C738 | 4030009500 | S.CER C1608 CH 1H 0R5B-T | T | 67.4/40.5 |

M.=Mounted side (T: Mounted on the Top side, B: Mounted on the Bottom side)
S.=Surface mount

## [MAIN UNIT]

| REF NO. | ORDER NO. | DESCRIPTION | M. | H/V LOCATION |
|---|---|---|---|---|
| C739 | 4030007050 | S.CER C1608 CH 1H 220J-T | T | 68.7/40.5 |
| C740 | 4030007020 | S.CER C1608 CH 1H 120J-T | T | 64.8/41 |
| C741 | 4030007050 | S.CER C1608 CH 1H 220J-T | T | 64.8/39.7 |
| C742 | 4030007030 | S.CER C1608 CH 1H 150J-T | T | 61.3/36.2 |
| C743 | 4030011600 | S.CER C1608 JB 1E 104K-T | T | 62.6/39 |
| C744 | 4030007130 | S.CER C1608 CH 1H 101J-T | T | 62.6/36.2 |
| C745 | 4030007140 | S.CER C1608 CH 1H 121J-T | T | 73.5/49.6 |
| C747 | 4030011600 | S.CER C1608 JB 1E 104K-T | T | 71.5/48.8 |
| C749 | 4030009550 | S.CER C1608 CH 1H 2R5B-T | T | 75.9/46.2 |
| C750 | 4030011770 | S.CER C1608 CH 1H 060B-T | T | 73.8/46.9 |
| C751 | 4030007010 | S.CER C1608 CH 1H 100D-T | T | 73.8/45.5 |
| C755 | 4030009550 | S.CER C1608 CH 1H 2R5B-T | T | 75.9/41 |
| C756 | 4030011770 | S.CER C1608 CH 1H 060B-T | T | 73.8/40.2 |
| C758 | 4030011600 | S.CER C1608 JB 1E 104K-T | T | 71.5/38.1 |
| C759 | 4030007140 | S.CER C1608 CH 1H 121J-T | T | 73.5/37.3 |
| C760 | 4030011770 | S.CER C1608 CH 1H 060B-T | T | 73.8/48.2 |
| C761 | 4030011770 | S.CER C1608 CH 1H 060B-T | T | 73.8/41.8 |
| C801 | 4030006880 | S.CER C1608 JB 1H 472K-T | T | 37.2/20.6 |
| C802 | 4030011600 | S.CER C1608 JB 1E 104K-T | T | 37.2/27.5 |
| C803 | 4030011600 | S.CER C1608 JB 1E 104K-T | B | 37.2/20.5 |
| C804 | 4030011600 | S.CER C1608 JB 1E 104K-T | T | 46.9/19.9 |
| C805 | 4030011600 | S.CER C1608 JB 1E 104K-T | B | 52/24.6 |
| C806 | 4030006900 | S.CER C1608 JB 1H 103K-T | B | 48.5/23.7 |
| C807 | 4030011600 | S.CER C1608 JB 1E 104K-T | T | 48.5/23.9 |
| C812 | 4030006900 | S.CER C1608 JB 1H 103K-T | B | 86.2/84.7 |
| C813 | 4030006880 | S.CER C1608 JB 1H 472K-T | T | 31.2/27.5 |
| C814 | 4030012600 | S.CER C2012 JB 1A 105M-T | T | 27.7/25.5 |
| C815 | 4030006990 | S.CER C1608 CH 1H 080D-T | B | 44.3/21 |
| C816 | 4030012600 | S.CER C2012 JB 1A 105M-T | T | 30.9/29 |
| C817 | 4030011330 | S.CER C1608 CH 1H 391J-T | T | 85.2/55.1 |
| C818 | 4030017810 | S.CER C1608 CH 1H 102J-T | T | 83.2/53.2 |
| C819 | 4030009920 | S.CER C1608 CH 1H 050B-T | T | 83.2/55.8 |
| C820 | 4030006900 | S.CER C1608 JB 1H 103K-T | T | 74.6/62.1 |
| C821 | 4030011600 | S.CER C1608 JB 1E 104K-T | T | 87.4/62.8 |
| C822 | 4030011600 | S.CER C1608 JB 1E 104K-T | T | 78.3/58.6 |
| C823 | 4030012600 | S.CER C2012 JB 1A 105M-T | T | 86.2/51.5 |
| C824 | 4030006900 | S.CER C1608 JB 1H 103K-T | T | 83.6/49.8 |
| C825 | 4030008880 | S.CER C1608 JB 1H 223K-T | T | 84.4/47.8 |
| C826 | 4030008850 | S.CER C1608 JB 1H 123K-T | T | 82.3/46.8 |
| C827 | 4030008850 | S.CER C1608 JB 1H 123K-T | T | 82.3/45.5 |
| C828 | 4030006900 | S.CER C1608 JB 1H 103K-T | T | 85.7/42.7 |
| C829 | 4030008860 | S.CER C1608 JB 1H 153K-T | T | 82.3/42.7 |
| C830 | 4030008860 | S.CER C1608 JB 1H 153K-T | T | 82.3/41.4 |
| C831 | 4030008650 | S.CER C1608 JB 1H 332K-T | T | 84.4/39.8 |
| C832 | 4030006900 | S.CER C1608 JB 1H 103K-T | T | 82.3/39.6 |
| C833 | 4030006900 | S.CER C1608 JB 1H 103K-T | T | 82.3/38.3 |
| C834 | 4030012600 | S.CER C2012 JB 1A 105M-T | T | 82.1/35.4 |
| C835 | 4030011600 | S.CER C1608 JB 1E 104K-T | T | 82.3/37 |
| C836 | 4030009920 | S.CER C1608 CH 1H 050B-T | T | 89.5/57.9 |
| C837 | 4550006470 | S.TAN TEESVB2 1D 106M8R | T | 72.9/58.7 |
| C838 | 4550006470 | S.TAN TEESVB2 1D 106M8R | T | 91.8/61.6 |
| C839 | 4030006880 | S.CER C1608 JB 1H 472K-T | B | 85.3/74.2 |
| C840 | 4030011600 | S.CER C1608 JB 1E 104K-T | B | 86/81.4 |
| C841 | 4030006880 | S.CER C1608 JB 1H 472K-T | B | 81.2/78.3 |
| C845 | 4030011600 | S.CER C1608 JB 1E 104K-T | T | 35.3/69.8 |
| C846 | 4030011600 | S.CER C1608 JB 1E 104K-T | T | 38.1/74.7 |
| C847 | 4510008540 | S.ELE EEE1CA100SR | T | 37.1/77.8 |
| C901 | 4030006880 | S.CER C1608 JB 1H 472K-T | B | 125.2/1.8 |
| C902 | 4030006880 | S.CER C1608 JB 1H 472K-T | T | 124.2/1.8 |
| C903 | 4030006880 | S.CER C1608 JB 1H 472K-T | B | 123.2/1.8 |
| C904 | 4030006880 | S.CER C1608 JB 1H 472K-T | T | 122.2/1.8 |
| C905 | 4030006880 | S.CER C1608 JB 1H 472K-T | B | 121.2/1.8 |
| C906 | 4030006880 | S.CER C1608 JB 1H 472K-T | T | 120.2/1.8 |
| C907 | 4030006880 | S.CER C1608 JB 1H 472K-T | B | 119.2/1.8 |
| C908 | 4030006880 | S.CER C1608 JB 1H 472K-T | T | 118.2/1.8 |
| C909 | 4030006880 | S.CER C1608 JB 1H 472K-T | B | 117.2/1.8 |
| C922 | 4030006880 | S.CER C1608 JB 1H 472K-T | T | 123.7/18.9 |
| C923 | 4030006880 | S.CER C1608 JB 1H 472K-T | B | 122.7/19.4 |
| C924 | 4030006880 | S.CER C1608 JB 1H 472K-T | T | 121.7/18.9 |
| C925 | 4030006880 | S.CER C1608 JB 1H 472K-T | B | 120.7/19.4 |
| C926 | 4030006880 | S.CER C1608 JB 1H 472K-T | T | 119.7/18.9 |
| C927 | 4030006880 | S.CER C1608 JB 1H 472K-T | B | 118.7/19.4 |
| C928 | 4030006880 | S.CER C1608 JB 1H 472K-T | T | 117.7/18.9 |
| C929 | 4030006880 | S.CER C1608 JB 1H 472K-T | B | 116.7/19.4 |
| C930 | 4030006880 | S.CER C1608 JB 1H 472K-T | T | 115.7/18.9 |
| C932 | 4030006880 | S.CER C1608 JB 1H 472K-T | T | 113.7/18.9 |
| C933 | 4030006880 | S.CER C1608 JB 1H 472K-T | B | 112.7/19.4 |
| C934 | 4030006880 | S.CER C1608 JB 1H 472K-T | T | 111.7/18.9 |
| C936 | 4030006880 | S.CER C1608 JB 1H 472K-T | T | 109.7/18.9 |
| C937 | 4030006880 | S.CER C1608 JB 1H 472K-T | B | 108.7/19.4 |
| C945 | 4030006880 | S.CER C1608 JB 1H 472K-T | B | 89.3/1.8 |
| C946 | 4030006880 | S.CER C1608 JB 1H 472K-T | T | 88.3/1.8 |
| C947 | 4030006880 | S.CER C1608 JB 1H 472K-T | B | 87.3/1.8 |
| C948 | 4030006880 | S.CER C1608 JB 1H 472K-T | T | 86.3/1.8 |
| C952 | 4030006880 | S.CER C1608 JB 1H 472K-T | T | 82.3/1.8 |
| C953 | 4030006880 | S.CER C1608 JB 1H 472K-T | B | 81.3/1.8 |
| C954 | 4030006880 | S.CER C1608 JB 1H 472K-T | T | 80.3/1.8 |
| C955 | 4030006880 | S.CER C1608 JB 1H 472K-T | B | 79.3/1.8 |
| C957 | 4030006880 | S.CER C1608 JB 1H 472K-T | B | 77.3/1.8 |
| C958 | 4030006880 | S.CER C1608 JB 1H 472K-T | T | 76.3/1.9 |
| C974 | 4030006880 | S.CER C1608 JB 1H 472K-T | T | 79.8/19.4 |
| C975 | 4030006880 | S.CER C1608 JB 1H 472K-T | B | 78.8/19.3 |
| C976 | 4030006880 | S.CER C1608 JB 1H 472K-T | T | 77.8/19.4 |
| C977 | 4030006880 | S.CER C1608 JB 1H 472K-T | B | 76.8/19.3 |
| C978 | 4030006880 | S.CER C1608 JB 1H 472K-T | T | 75.8/19.4 |
| C979 | 4030006880 | S.CER C1608 JB 1H 472K-T | B | 74.8/19.3 |
| C980 | 4030006880 | S.CER C1608 JB 1H 472K-T | T | 12.8/30 |
| C981 | 4030006880 | S.CER C1608 JB 1H 472K-T | T | 126.2/1.8 |
| RL50 | 6330000540 | RLY 2-1419131-2 (OMR-109F) | | |
| RL140 | 6330001430 | RLY NA-12W-K | | |
| RL141 | 6330001430 | RLY NA-12W-K | | |

## [MAIN UNIT]

| REF NO. | ORDER NO. | DESCRIPTION | M. | H/V LOCATION |
|---|---|---|---|---|
| CP81 | 6910009670 | S.CHK HK3-S-T | T | 129.3/16.1 |
| CP82 | 6910009670 | S.CHK HK3-S-T | T | 116.4/75.1 |
| CP495 | 6910009670 | S.CHK HK3-S-T | T | 129.1/5.8 |
| CP496 | 6910009670 | S.CHK HK3-S-T | T | 107.1/5.8 |
| J1 | 6510023671 | CNR TCS4480-0141577 | | |
| J2 | 6510023661 | CNR TCS4470-0141577 | | |
| J3 | 6510023671 | CNR TCS4480-0141577 | | |
| J4 | 6510023661 | CNR TCS4470-0141577 | | |
| J5 | 6450001130 | CNR JPJ2042-01-110 | | |
| J6 | 6510023730 | CNR LGY6502-0600C | | |
| J7 | 6510023730 | CNR LGY6502-0600C | | |
| J8 | 6510023740 | CNR LGR4609-7000 | | |
| J9 | 6510024940 | CNR HEC2305-016250 | | |
| J140 | 6510023720 | CNR LGY6501-0600C | | |
| J141 | 6510023720 | CNR LGY6501-0600C | | |
| J142 | 6510018961 | S.CNR B2B-PH-SM4-TB (LF) (SN) | T | 256.2/96.5 |
| J340 | 6510022811 | CNR IMSA-9180B-22B-PT1 | | |
| J341 | 6510021651 | CNR IMSA-9180B-30B-PT1 | | |
| J360 | 6510022811 | CNR IMSA-9180B-22B-PT1 | | |
| J361 | 6510021651 | CNR IMSA-9180B-30B-PT1 | | |
| J380 | 6510022811 | CNR IMSA-9180B-22B-PT1 | | |
| J381 | 6510021651 | CNR IMSA-9180B-30B-PT1 | | |
| J399 | 6510007020 | CNR TMP-J01X-V6 | | |
| J400 | 6510019981 | S.CNR 52808-1671 (1690) | T | 232.7/5 |
| J401 | 6510022191 | S.CNR B3B-PH-SM4-TB (LF) (SN) | T | 232.7/98.9 |
| J403 | 6510019981 | S.CNR 52808-1671 (1690) | T | 32.5/5 |
| J404 | 6510022191 | S.CNR B3B-PH-SM4-TB (LF) (SN) | T | 143.8/115.4 |
| J410 | 6510020001 | S.CNR 52808-3071 (3090) | T | 5.5/42.5 |
| J411 | 6510019971 | S.CNR 52808-1071 | T | 5.6/98.7 |
| J430 | 6510022311 | S.CNR B5B-PH-SM4-TB (LF) (SN) | T | 5/72.9 |
| J440 | 6510018921 | S.CNR B8B-PH-SM4-TB (LF) (SN) | T | 154.5/5 |
| J450 | 6510003471 | CNR B11B-EH-S (LF) (SN) | | |
| J451 | 6510018941 | S.CNR B13B-PH-SM4-TB (LF) (SN) | T | 184.2/5 |
| J490 | 6510023750 | CNR 01K1971-10 | | |
| J491 | 6510007020 | CNR TMP-J01X-V6 | | |
| J492 | 6510014961 | S.CNR B2B-ZR-SM4-TF (LF) (SN) | T | 202.6/11.5 |
| J495 | 6510023701 | CNR TORX178S (F) | | |
| J496 | 6510023711 | CNR TOTX178S (F) | | |
| J501 | 6510007020 | CNR TMP-J01X-V6 | | |
| J502 | 6510007020 | CNR TMP-J01X-V6 | | |
| J503 | 6510007020 | CNR TMP-J01X-V6 | | |
| J801 | 6510007020 | CNR TMP-J01X-V6 | | |
| J802 | 6510007020 | CNR TMP-J01X-V6 | | |
| J808 | 6510007020 | CNR TMP-J01X-V6 | | |
| J900 | 6510022471 | S.CNR 40FLT-SM2-TB (LF) (SN) | T | 116.5/10.6 |
| J901 | 6510015541 | S.CNR B4B-ZR-SM4-TF (LF) (SN) | T | 9.2/113 |
| J940 | 6510022471 | S.CNR 40FLT-SM2-TB (LF) (SN) | T | 84.6/10.6 |
| F1 | 5220000230 | HOL S-N5054 #01 | | |
| F2 | 5220000230 | HOL S-N5054 #01 | | |
| F3 | 5210000041 | FUS FGB 2A PBF (FGB0 125V) | | |
| W1 | 9024801019 | JMP 74/98/020/X98/X98 | | |
| EP50 | 6910012350 | S.BEA MMZ1608Y 102BT | B | 78.1/126.8 |
| EP51 | 6910012350 | S.BEA MMZ1608Y 102BT | B | 95.6/118.7 |
| EP52 | 6910012350 | S.BEA MMZ1608Y 102BT | B | 90.1/126.1 |
| EP403 | 6910012350 | S.BEA MMZ1608Y 102BT | T | 233.2/10.4 |
| EP404 | 6910012350 | S.BEA MMZ1608Y 102BT | T | 231.9/10.4 |
| EP408 | 6910012350 | S.BEA MMZ1608Y 102BT | T | 32.1/10 |
| EP409 | 6910012350 | S.BEA MMZ1608Y 102BT | T | 30.8/10 |
| EP414 | 6910012350 | S.BEA MMZ1608Y 102BT | T | 9.9/34 |
| EP415 | 6910012350 | S.BEA MMZ1608Y 102BT | B | 9.9/31 |
| EP416 | 6910012350 | S.BEA MMZ1608Y 102BT | B | 10.2/95 |
| EP417 | 6910012350 | S.BEA MMZ1608Y 102BT | T | 10.2/96.2 |
| EP420 | 6910012350 | S.BEA MMZ1608Y 102BT | B | 10.1/101.2 |
| EP421 | 6910012350 | S.BEA MMZ1608Y 102BT | T | 10.1/102.2 |
| EP430 | 6910012350 | S.BEA MMZ1608Y 102BT | B | 5.8/68.9 |
| EP431 | 6910012350 | S.BEA MMZ1608Y 102BT | B | 5.8/70.9 |
| EP432 | 6910012350 | S.BEA MMZ1608Y 102BT | B | 5.8/72.9 |
| EP501 | 9088000010 | TUB IRRAX 1.5 (d) L=12 mm | | |
| EP905 | 6910012350 | S.BEA MMZ1608Y 102BT | B | 121.2/5.8 |
| EP907 | 6910012350 | S.BEA MMZ1608Y 102BT | B | 119.2/5.8 |

M.=Mounted side (T: Mounted on the Top side, B: Mounted on the Bottom side)
S.=Surface mount

## [DSP-A BOARD]

| REF NO. | ORDER NO. | DESCRIPTION | | M. | H/V LOCATION |
|---|---|---|---|---|---|
| IC1 | 1140012211 | S.IC | TMS320C6713BZDP225 | T | 28.1/20.4 |
| IC151 | 1130008361 | S.IC | TC7SHU04FU (TE85L,JF) | B | 45.5/8.1 |
| IC171 | 1130008041 | S.IC | TC7SH04FU (TE85L,JF) | T | 41.3/4.6 |
| IC181 | 1130011150 | S.IC | SN74AHC2G08HDCTR | T | 30.2/1.9 |
| IC191 | 1130011150 | S.IC | SN74AHC2G08HDCTR | T | 24/3.5 |
| IC201 | 1130013492 | S.IC | AT29LV040A-15TU | B | 29/42 |
| IC203 | 1110006411 | S.IC | R3111N111A-TR-F | T | 30/36.5 |
| IC301 | 1110006100 | S.IC | NJM5534MD-TE1 | T | 72.3/44.7 |
| IC331 | 1130009981 | S.IC | TC7W53FK (TE85L,F) | T | 76.9/34.1 |
| IC341 | 1110006100 | S.IC | NJM5534MD-TE1 | T | 70.3/35.5 |
| IC371 | 1110006100 | S.IC | NJM5534MD-TE1 | T | 59.4/44.3 |
| IC401 | 1110006111 | S.IC | AK5394AVSP/P | T | 54.2/31 |
| IC451 | 1130006891 | S.IC | TC7S04FU (TE85R,F) | T | 43.5/41 |
| IC452 | 1130012160 | S.IC | SN74LVC1GU04DCKR | T | 42.8/38.5 |
| IC501 | 1110001901 | S.IC | uPC4570G2-E1-A | T | 71.6/27.4 |
| IC551 | 1130013090 | S.IC | AK4396VFP-E2/P | T | 54.6/7.3 |
| IC601 | 1110006100 | S.IC | NJM5534MD-TE1 | T | 63.6/17.3 |
| IC651 | 1110006100 | S.IC | NJM5534MD-TE1 | T | 66.8/7.2 |
| IC701 | 1110006100 | S.IC | NJM5534MD-TE1 | T | 74.1/17.5 |
| IC771 | 1110004770 | S.IC | BU9480F-E2 | T | 51.7/18.4 |
| Q1 | 1590000680 | S.TR | DTC114EUA T106 | T | 45.7/16.5 |
| D501 | 1730002320 | S.ZEN | MA8051-M (TX) | B | 76.5/29.5 |
| FI101 | 2040000790 | S.LC | EXCCET103U | T | 36.5/2.8 |
| X151 | 6050011660 | S.XTL | CR-754 (30.000 MHz) | B | 40.5/2.9 |
| L1 | 6200003950 | S.COL | HF50ACC 322513-T | B | 43.2/34.8 |
| L2 | 6180003501 | S.COL | SLF6028T-100M1R3-PF | B | 13.6/35.7 |
| L3 | 6200003640 | S.COL | MLF1608E 100K-T | B | 12.2/8.2 |
| L401 | 6200003950 | S.COL | HF50ACC 322513-T | T | 49.3/42.9 |
| L921 | 6200003950 | S.COL | HF50ACC 322513-T | T | 73.7/4.4 |
| L922 | 6200003950 | S.COL | HF50ACC 322513-T | T | 77.9/9.5 |
| L924 | 6200003950 | S.COL | HF50ACC 322513-T | T | 74.1/9.5 |
| L925 | 6200003950 | S.COL | HF50ACC 322513-T | T | 77.5/4.4 |
| L961 | 6200003950 | S.COL | HF50ACC 322513-T | B | 11.3/12.2 |
| L962 | 6200003950 | S.COL | HF50ACC 322513-T | B | 12.8/24.6 |
| R1 | 7030003560 | S.RES | ERJ3GEYJ 103 V (10 k) | B | 42.5/22.3 |
| R2 | 7030003560 | S.RES | ERJ3GEYJ 103 V (10 k) | B | 41.8/24.2 |
| R3 | 7030003560 | S.RES | ERJ3GEYJ 103 V (10 k) | B | 42.5/21 |
| R4 | 7030003560 | S.RES | ERJ3GEYJ 103 V (10 k) | B | 41.8/13.7 |
| R5 | 7030003440 | S.RES | ERJ3GEYJ 102 V (1 k) | B | 23.2/6 |
| R6 | 7030003440 | S.RES | ERJ3GEYJ 102 V (1 k) | B | 21.9/6 |
| R7 | 7030003640 | S.RES | ERJ3GEYJ 473 V (47 k) | B | 20/6.7 |
| R8 | 7030003440 | S.RES | ERJ3GEYJ 102 V (1 k) | B | 14.1/8.2 |
| R9 | 7030003640 | S.RES | ERJ3GEYJ 473 V (47 k) | B | 14.5/11.6 |
| R10 | 7030003640 | S.RES | ERJ3GEYJ 473 V (47 k) | T | 43.8/13.1 |
| R11 | 7030003460 | S.RES | ERJ3GEYJ 152 V (1.5 k) | B | 48.2/9.7 |
| R12 | 7030003560 | S.RES | ERJ3GEYJ 103 V (10 k) | B | 26.8/13.3 |
| R151 | 7030003320 | S.RES | ERJ3GEYJ 101 V (100) | T | 44.3/5.3 |
| R152 | 7030003800 | S.RES | ERJ3GEYJ 105 V (1 M) | B | 43.5/6.2 |
| R171 | 7030003320 | S.RES | ERJ3GEYJ 101 V (100) | T | 41.3/1.4 |
| R181 | 7030003560 | S.RES | ERJ3GEYJ 103 V (10 k) | T | 9.1/7 |
| R182 | 7030003560 | S.RES | ERJ3GEYJ 103 V (10 k) | T | 6.3/7 |
| R183 | 7030003560 | S.RES | ERJ3GEYJ 103 V (10 k) | T | 11.9/8.3 |
| R184 | 7030003560 | S.RES | ERJ3GEYJ 103 V (10 k) | T | 11.9/7 |
| R201 | 7030003860 | S.RES | ERJ3GE JPW V | T | 30.8/39.2 |
| R301 | 7030003860 | S.RES | ERJ3GE JPW V | T | 79.5/38.4 |
| R302 | 7030009591 | S.RES | ERA3YED 472V (4.7 k) | T | 77.6/46.9 |
| R303 | 7030009591 | S.RES | ERA3YED 472V (4.7 k) | T | 75.7/46.1 |
| R304 | 7030003320 | S.RES | ERJ3GEYJ 101 V (100) | T | 78.1/40.7 |
| R305 | 7030003860 | S.RES | ERJ3GE JPW V | T | 75.7/43.5 |
| R306 | 7030003320 | S.RES | ERJ3GEYJ 101 V (100) | T | 68.9/46.1 |
| R331 | 7030003500 | S.RES | ERJ3GEYJ 332 V (3.3 k) | T | 64.4/39.9 |
| R332 | 7030003480 | S.RES | ERJ3GEYJ 222 V (2.2 k) | T | 65.7/39.9 |
| R333 | 7030003640 | S.RES | ERJ3GEYJ 473 V (47 k) | T | 75/33.2 |
| R341 | 7030003320 | S.RES | ERJ3GEYJ 101 V (100) | T | 73.7/34.8 |
| R342 | 7030003320 | S.RES | ERJ3GEYJ 101 V (100) | T | 66.9/37.3 |
| R343 | 7030006601 | S.RES | ERA3YED 272V (2.7 k) | T | 73.7/37.4 |
| R344 | 7030010390 | S.RES | ERA3YED 821V (820) | T | 65.6/33.6 |
| R345 | 7030009691 | S.RES | ERA3YED 101V (100) | T | 66.2/31.7 |
| R371 | 7030003320 | S.RES | ERJ3GEYJ 101 V (100) | T | 63.4/43.8 |
| R372 | 7030003320 | S.RES | ERJ3GEYJ 101 V (100) | T | 55.3/46.3 |
| R373 | 7030006601 | S.RES | ERA3YED 272V (2.7 k) | T | 63.4/45.6 |
| R374 | 7030010390 | S.RES | ERA3YED 821V (820) | T | 54.7/41.8 |
| R375 | 7030009691 | S.RES | ERA3YED 101V (100) | T | 56/40.5 |
| R401 | 7030009591 | S.RES | ERA3YED 472V (4.7 k) | T | 53.1/42.5 |
| R402 | 7030009591 | S.RES | ERA3YED 472V (4.7 k) | T | 51.8/44 |
| R403 | 7030003640 | S.RES | ERJ3GEYJ 473 V (47 k) | T | 54.1/38.7 |
| R404 | 7030003200 | S.RES | ERJ3GEYJ 100 V (10) | T | 50/40 |
| R405 | 7030003320 | S.RES | ERJ3GEYJ 101 V (100) | T | 51.1/38.1 |
| R406 | 7030003640 | S.RES | ERJ3GEYJ 473 V (47 k) | T | 49.8/38.1 |
| R407 | 7030003460 | S.RES | ERJ3GEYJ 152 V (1.5 k) | B | 46.8/36 |
| R409 | 7030003640 | S.RES | ERJ3GEYJ 473 V (47 k) | T | 52.3/23.8 |
| R410 | 7030003640 | S.RES | ERJ3GEYJ 473 V (47 k) | T | 47.2/23.8 |
| R411 | 7030003640 | S.RES | ERJ3GEYJ 473 V (47 k) | T | 49.8/23.8 |
| R412 | 7030003520 | S.RES | ERJ3GEYJ 472 V (4.7 k) | T | 56/22.3 |
| R413 | 7030003520 | S.RES | ERJ3GEYJ 472 V (4.7 k) | T | 54.1/21.9 |
| R451 | 7030003800 | S.RES | ERJ3GEYJ 105 V (1 M) | T | 42.6/36.6 |
| R501 | 7030006521 | S.RES | ERA3YED 561V (560) | T | 76.1/29.9 |
| R502 | 7030003360 | S.RES | ERJ3GEYJ 221 V (220) | T | 70.3/23.4 |
| R503 | 7030003380 | S.RES | ERJ3GEYJ 331 V (330) | T | 65.3/28.9 |
| R504 | 7030003680 | S.RES | ERJ3GEYJ 104 V (100 k) | T | 65.3/27.6 |
| R551 | 7030003320 | S.RES | ERJ3GEYJ 101 V (100) | T | 49.5/8.6 |
| R559 | 7030003640 | S.RES | ERJ3GEYJ 473 V (47 k) | T | 59.8/10.5 |
| R601 | 7030006521 | S.RES | ERA3YED 561V (560) | T | 63.1/20.7 |
| R602 | 7030007661 | S.RES | ERA3YED 331V (330) | T | 64/22 |
| R603 | 7030007661 | S.RES | ERA3YED 331V (330) | T | 59/19.8 |
| R604 | 7030009961 | S.RES | ERA3YED 221V (220) | T | 68.7/21 |
| R605 | 7030007661 | S.RES | ERA3YED 331V (330) | T | 65.7/20.7 |
| R606 | 7030003320 | S.RES | ERJ3GEYJ 101 V (100) | T | 67.1/13.9 |

## [DSP-A BOARD]

| REF NO. | ORDER NO. | DESCRIPTION | | M. | H/V LOCATION |
|---|---|---|---|---|---|
| R607 | 7030003320 | S.RES | ERJ3GEYJ 101 V (100) | T | 61.9/13.9 |
| R651 | 7030006521 | S.RES | ERA3YED 561V (560) | T | 64.3/10.6 |
| R652 | 7030007661 | S.RES | ERA3YED 331V (330) | T | 65.3/11.9 |
| R653 | 7030007661 | S.RES | ERA3YED 331V (330) | T | 62.1/10.1 |
| R654 | 7030009961 | S.RES | ERA3YED 221V (220) | T | 69.5/10.6 |
| R655 | 7030007661 | S.RES | ERA3YED 331V (330) | T | 66.9/10.6 |
| R658 | 7030003320 | S.RES | ERJ3GEYJ 101 V (100) | T | 67.7/3.8 |
| R659 | 7030003320 | S.RES | ERJ3GEYJ 101 V (100) | T | 64/3.8 |
| R701 | 7030010770 | S.RES | ERA3YED 681V (680) | T | 71.3/21 |
| R702 | 7030009861 | S.RES | ERA3YED 471V (470) | T | 74.8/22.7 |
| R703 | 7030010770 | S.RES | ERA3YED 681V (680) | T | 70.5/13.5 |
| R704 | 7030009861 | S.RES | ERA3YED 471V (470) | T | 77.2/13.3 |
| R705 | 7030009691 | S.RES | ERA3YED 101V (100) | T | 77.4/22.2 |
| R706 | 7030003320 | S.RES | ERJ3GEYJ 101 V (100) | T | 77.3/20.9 |
| R707 | 7030003320 | S.RES | ERJ3GEYJ 101 V (100) | T | 74.1/14.1 |
| R801 | 7030003650 | S.RES | ERJ3GEYJ 563 V (56 k) | T | 78/27.2 |
| R802 | 7030003680 | S.RES | ERJ3GEYJ 104 V (100 k) | T | 78/25.9 |
| R803 | 7030003480 | S.RES | ERJ3GEYJ 222 V (2.2 k) | T | 78.7/24 |
| R804 | 7030003490 | S.RES | ERJ3GEYJ 272 V (2.7 k) | T | 78/29.8 |
| R805 | 7030003340 | S.RES | ERJ3GEYJ 151 V (150) | T | 78/28.5 |
| R901 | 7030003860 | S.RES | ERJ3GE JPW V | T | 46.6/21 |
| R962 | 7030003320 | S.RES | ERJ3GEYJ 101 V (100) | T | 12.1/16.8 |
| R963 | 7030003320 | S.RES | ERJ3GEYJ 101 V (100) | T | 11.9/15.5 |
| R964 | 7030003320 | S.RES | ERJ3GEYJ 101 V (100) | T | 11.9/14.2 |
| R965 | 7030003320 | S.RES | ERJ3GEYJ 101 V (100) | T | 11.9/12.9 |
| R967 | 7030003320 | S.RES | ERJ3GEYJ 101 V (100) | T | 13.6/37.8 |
| R968 | 7030003320 | S.RES | ERJ3GEYJ 101 V (100) | T | 11.9/11.6 |
| R969 | 7030003320 | S.RES | ERJ3GEYJ 101 V (100) | T | 13.6/48.2 |
| R970 | 7030003320 | S.RES | ERJ3GEYJ 101 V (100) | T | 13.6/46.9 |
| R971 | 7030003320 | S.RES | ERJ3GEYJ 101 V (100) | T | 13.6/45.6 |
| R972 | 7030003320 | S.RES | ERJ3GEYJ 101 V (100) | T | 13.6/44.3 |
| R973 | 7030003320 | S.RES | ERJ3GEYJ 101 V (100) | T | 13.6/43 |
| R974 | 7030003320 | S.RES | ERJ3GEYJ 101 V (100) | T | 13.6/41.7 |
| R975 | 7030003320 | S.RES | ERJ3GEYJ 101 V (100) | T | 13.6/40.4 |
| R976 | 7030003320 | S.RES | ERJ3GEYJ 101 V (100) | T | 13.6/39.1 |
| C1 | 4030011600 | S.CER | C1608 JB 1E 104K-T | B | 15.2/30.5 |
| C2 | 4030011600 | S.CER | C1608 JB 1E 104K-T | B | 41.8/30.7 |
| C3 | 4030011600 | S.CER | C1608 JB 1E 104K-T | B | 18/32.9 |
| C4 | 4030011600 | S.CER | C1608 JB 1E 104K-T | B | 39.4/32.9 |
| C5 | 4030011600 | S.CER | C1608 JB 1E 104K-T | B | 23/26.3 |
| C6 | 4030011600 | S.CER | C1608 JB 1E 104K-T | B | 24.3/26.3 |
| C7 | 4030011600 | S.CER | C1608 JB 1E 104K-T | B | 28.6/26.3 |
| C8 | 4030011600 | S.CER | C1608 JB 1E 104K-T | B | 29.9/26.3 |
| C9 | 4030011600 | S.CER | C1608 JB 1E 104K-T | B | 33.8/26.3 |
| C10 | 4030011600 | S.CER | C1608 JB 1E 104K-T | B | 21.5/23.3 |
| C11 | 4030011600 | S.CER | C1608 JB 1E 104K-T | B | 36/23.7 |
| C12 | 4030011600 | S.CER | C1608 JB 1E 104K-T | T | 13.7/21 |
| C13 | 4030011600 | S.CER | C1608 JB 1E 104K-T | B | 22.2/20.2 |
| C14 | 4030011600 | S.CER | C1608 JB 1E 104K-T | B | 36/21.1 |
| C15 | 4030011600 | S.CER | C1608 JB 1E 104K-T | B | 22.2/18.9 |
| C16 | 4030011600 | S.CER | C1608 JB 1E 104K-T | B | 36/18.5 |
| C17 | 4030011600 | S.CER | C1608 JB 1E 104K-T | T | 43.5/20 |
| C18 | 4030011600 | S.CER | C1608 JB 1E 104K-T | B | 22.2/15.2 |
| C19 | 4030011600 | S.CER | C1608 JB 1E 104K-T | B | 34.7/14.4 |
| C20 | 4030011600 | S.CER | C1608 JB 1E 104K-T | B | 23.1/13.3 |
| C21 | 4030011600 | S.CER | C1608 JB 1E 104K-T | B | 24.4/13.3 |
| C22 | 4030011600 | S.CER | C1608 JB 1E 104K-T | B | 28.1/13.3 |
| C23 | 4030011600 | S.CER | C1608 JB 1E 104K-T | B | 32.6/12.6 |
| C24 | 4030011600 | S.CER | C1608 JB 1E 104K-T | B | 35.2/12.6 |
| C25 | 4030011600 | S.CER | C1608 JB 1E 104K-T | B | 17.3/6.7 |
| C26 | 4030011600 | S.CER | C1608 JB 1E 104K-T | B | 33.1/6.8 |
| C27 | 4030011600 | S.CER | C1608 JB 1E 104K-T | B | 41.8/11.1 |
| C28 | 4030011600 | S.CER | C1608 JB 1E 104K-T | B | 15.4/8.2 |
| C29 | 4030011600 | S.CER | C1608 JB 1E 104K-T | B | 40.9/6.8 |
| C30 | 4030011600 | S.CER | C1608 JB 1E 104K-T | T | 35.2/5 |
| C31 | 4030011600 | S.CER | C1608 JB 1E 104K-T | T | 28.5/5.2 |
| C32 | 4030011600 | S.CER | C1608 JB 1E 104K-T | T | 37.8/5 |
| C33 | 4030011600 | S.CER | C1608 JB 1E 104K-T | T | 18.5/35.2 |
| C34 | 4030011600 | S.CER | C1608 JB 1E 104K-T | T | 36.4/35 |
| C35 | 4030011600 | S.CER | C1608 JB 1E 104K-T | B | 26/32.9 |
| C36 | 4030011600 | S.CER | C1608 JB 1E 104K-T | B | 29.3/32.9 |
| C37 | 4030011600 | S.CER | C1608 JB 1E 104K-T | B | 36.8/32.9 |
| C38 | 4030011600 | S.CER | C1608 JB 1E 104K-T | B | 15.2/27.9 |
| C39 | 4030011600 | S.CER | C1608 JB 1E 104K-T | B | 22.4/32.9 |
| C40 | 4030011600 | S.CER | C1608 JB 1E 104K-T | B | 26/26.3 |
| C41 | 4030011600 | S.CER | C1608 JB 1E 104K-T | B | 21.7/26.3 |
| C42 | 4030011600 | S.CER | C1608 JB 1E 104K-T | B | 27.3/26.3 |
| C43 | 4030011600 | S.CER | C1608 JB 1E 104K-T | B | 32.5/26.3 |
| C44 | 4030011600 | S.CER | C1608 JB 1E 104K-T | B | 35.1/26.3 |
| C45 | 4030011600 | S.CER | C1608 JB 1E 104K-T | B | 41.8/26.8 |
| C46 | 4030011600 | S.CER | C1608 JB 1E 104K-T | B | 15.3/24.9 |
| C47 | 4030011600 | S.CER | C1608 JB 1E 104K-T | T | 43.5/29 |
| C48 | 4030011600 | S.CER | C1608 JB 1E 104K-T | B | 22.2/21.5 |
| C49 | 4030011600 | S.CER | C1608 JB 1E 104K-T | B | 41.8/17.9 |
| C50 | 4030011600 | S.CER | C1608 JB 1E 104K-T | B | 22.2/17.6 |
| C51 | 4030011600 | S.CER | C1608 JB 1E 104K-T | B | 36/15.9 |
| C52 | 4030011600 | S.CER | C1608 JB 1E 104K-T | B | 15.8/11.6 |
| C53 | 4030011600 | S.CER | C1608 JB 1E 104K-T | B | 21.8/13.3 |
| C54 | 4030011600 | S.CER | C1608 JB 1E 104K-T | T | 42.9/9.9 |
| C55 | 4030011600 | S.CER | C1608 JB 1E 104K-T | B | 29.4/13.3 |
| C56 | 4030011600 | S.CER | C1608 JB 1E 104K-T | B | 25/6.7 |
| C57 | 4030011600 | S.CER | C1608 JB 1E 104K-T | B | 29.8/6.8 |
| C58 | 4030011600 | S.CER | C1608 JB 1E 104K-T | B | 38.3/6.8 |
| C59 | 4030011600 | S.CER | C1608 JB 1E 104K-T | T | 20.3/5.3 |
| C60 | 4510007130 | S.ELE | EEFCD 0J 470R | T | 19.6/44 |
| C61 | 4550007480 | S.TAN | F930J106MAABMA | B | 44.8/29.7 |
| C62 | 4510007130 | S.ELE | EEFCD 0J 470R | T | 25.7/43.9 |
| C101 | 4030011600 | S.CER | C1608 JB 1E 104K-T | B | 35.7/6.8 |
| C151 | 4030011600 | S.CER | C1608 JB 1E 104K-T | B | 45.6/10 |
| C152 | 4030007030 | S.CER | C1608 CH 1H 150J-T | B | 46.1/6.2 |
| C153 | 4030007030 | S.CER | C1608 CH 1H 150J-T | B | 43.1/8 |
| C171 | 4030011600 | S.CER | C1608 JB 1E 104K-T | T | 41.3/2.7 |
| C181 | 4030011600 | S.CER | C1608 JB 1E 104K-T | T | 31/4.3 |

M.=Mounted side (T: Mounted on the Top side, B: Mounted on the Bottom side)
S.=Surface mount

## [DSP-A BOARD]

| REF NO. | ORDER NO. | DESCRIPTION | | M. | H/V LOCATION |
|---|---|---|---|---|---|
| C191 | 4030011600 | S.CER | C1608 JB 1E 104K-T | T | 22.6/1.2 |
| C201 | 4030011600 | S.CER | C1608 JB 1E 104K-T | B | 41.4/43.3 |
| C301 | 4340000250 | S.MLR | ECHU 1C 104JX5 | T | 77.9/44 |
| C302 | 4550007500 | S.TAN | F931D106MBABMA | B | 76.5/43.7 |
| C303 | 4030011600 | S.CER | C1608 JB 1E 104K-T | T | 75.6/40.9 |
| C304 | 4550007500 | S.TAN | F931D106MBABMA | B | 71.7/43.7 |
| C305 | 4030011600 | S.CER | C1608 JB 1E 104K-T | T | 67.6/46.1 |
| C306 | 4030007050 | S.CER | C1608 CH 1H 220J-T | T | 72.4/40.1 |
| C331 | 4030011600 | S.CER | C1608 JB 1E 104K-T | T | 78.8/32.8 |
| C332 | 4550007520 | S.TAN | F931A106MAABMA | B | 67.9/35.2 |
| C333 | 4030011600 | S.CER | C1608 JB 1E 104K-T | T | 79.5/35.8 |
| C341 | 4550007500 | S.TAN | F931D106MBABMA | B | 73.1/32.4 |
| C342 | 4030011600 | S.CER | C1608 JB 1E 104K-T | T | 73.7/31.6 |
| C343 | 4550007500 | S.TAN | F931D106MBABMA | B | 73.2/38.1 |
| C344 | 4030011600 | S.CER | C1608 JB 1E 104K-T | T | 65.6/37.3 |
| C345 | 4340000250 | S.MLR | ECHU 1C 104JX5 | T | 76.7/38.1 |
| C346 | 4030018580 | S.CER | C1608 CH 1H 821J-T | T | 66.9/33.6 |
| C347 | 4030011600 | S.CER | C1608 JB 1E 104K-T | T | 66.1/35.5 |
| C348 | 4030007050 | S.CER | C1608 CH 1H 220J-T | T | 70.9/30.9 |
| C371 | 4550007500 | S.TAN | F931D106MBABMA | B | 59.8/43.8 |
| C372 | 4030011600 | S.CER | C1608 JB 1E 104K-T | T | 63.4/42.5 |
| C373 | 4550007500 | S.TAN | F931D106MBABMA | B | 50.1/43.9 |
| C374 | 4030011600 | S.CER | C1608 JB 1E 104K-T | T | 53.4/45.5 |
| C375 | 4340000250 | S.MLR | ECHU 1C 104JX5 | T | 68.1/42.6 |
| C376 | 4030018580 | S.CER | C1608 CH 1H 821J-T | T | 56/43.1 |
| C377 | 4030011600 | S.CER | C1608 JB 1E 104K-T | T | 55.3/45 |
| C378 | 4030007050 | S.CER | C1608 CH 1H 220J-T | T | 59.4/39.5 |
| C401 | 4550007520 | S.TAN | F931A106MAABMA | B | 54.9/43.8 |
| C402 | 4030017840 | S.CER | C2012 CH 1H 222J-T | T | 58.1/37.6 |
| C403 | 4550007480 | S.TAN | F930J106MAABMA | B | 63.1/35.2 |
| C404 | 4030011810 | S.CER | C1608 JB 1A 224K-T | T | 61.5/37.4 |
| C405 | 4550007480 | S.TAN | F930J106MAABMA | B | 58.3/35.2 |
| C406 | 4030011810 | S.CER | C1608 JB 1A 224K-T | T | 63.5/36.7 |
| C407 | 4550007480 | S.TAN | F930J106MAABMA | B | 50.4/36.1 |
| C408 | 4030011600 | S.CER | C1608 JB 1E 104K-T | T | 54.1/37.4 |
| C409 | 4030011600 | S.CER | C1608 JB 1E 104K-T | T | 54.1/23.2 |
| C410 | 4030009000 | S.CER | C2012 JB 1C 224K-T | T | 62.1/24.2 |
| C411 | 4550007480 | S.TAN | F930J106MAABMA | B | 63.1/28.4 |
| C412 | 4550007480 | S.TAN | F930J106MAABMA | B | 58.3/29.1 |
| C413 | 4030009000 | S.CER | C2012 JB 1C 224K-T | T | 59/22.5 |
| C414 | 4030011600 | S.CER | C1608 JB 1E 104K-T | T | 54.1/24.5 |
| C415 | 4550007520 | S.TAN | F931A106MAABMA | B | 53/26.5 |
| C416 | 4550007520 | S.TAN | F931A106MAABMA | B | 53/31.3 |
| C417 | 4030017840 | S.CER | C2012 CH 1H 222J-T | T | 58/24.2 |
| C450 | 4030011600 | S.CER | C1608 JB 1E 104K-T | T | 43.1/35.3 |
| C451 | 4030011600 | S.CER | C1608 JB 1E 104K-T | T | 43.6/42.9 |
| C452 | 4030006860 | S.CER | C1608 JB 1H 102K-T | T | 40.8/39.6 |
| C501 | 4030011600 | S.CER | C1608 JB 1E 104K-T | T | 74.8/24 |
| C502 | 4550007500 | S.TAN | F931D106MBABMA | B | 77.5/33.1 |
| C503 | 4030011600 | S.CER | C1608 JB 1E 104K-T | T | 71.6/23.4 |
| C504 | 4550007500 | S.TAN | F931D106MBABMA | B | 67.9/29.1 |
| C506 | 4030007090 | S.CER | C1608 CH 1H 470J-T | T | 67.1/28.4 |
| C507 | 4030007090 | S.CER | C1608 CH 1H 470J-T | T | 76.1/27.3 |
| C551 | 4550007520 | S.TAN | F931A106MAABMA | B | 50.3/8.7 |
| C552 | 4030011600 | S.CER | C1608 JB 1E 104K-T | T | 49.5/5.5 |
| C553 | 4550007520 | S.TAN | F931A106MAABMA | B | 55/13.3 |
| C554 | 4030011600 | S.CER | C1608 JB 1E 104K-T | T | 60/7.6 |
| C555 | 4030011600 | S.CER | C1608 JB 1E 104K-T | T | 59.8/4.6 |
| C556 | 4550007480 | S.TAN | F930J106MAABMA | B | 53.6/7.1 |
| C557 | 4030011600 | S.CER | C1608 JB 1E 104K-T | T | 60.7/2.8 |
| C558 | 4550007520 | S.TAN | F931A106MAABMA | B | 53.6/4.3 |
| C601 | 4550007480 | S.TAN | F930J106MAABMA | B | 61.3/17.2 |
| C602 | 4030018510 | S.CER | C2012 CH 1H 682J-T | T | 58.8/16.5 |
| C603 | 4550007500 | S.TAN | F931D106MBABMA | B | 68.2/15 |
| C604 | 4030011600 | S.CER | C1608 JB 1E 104K-T | T | 58.2/14.2 |
| C605 | 4030011600 | S.CER | C1608 JB 1E 104K-T | T | 64.5/13.9 |
| C606 | 4550007500 | S.TAN | F931D106MBABMA | B | 69.2/19.2 |
| C607 | 4030018510 | S.CER | C2012 CH 1H 682J-T | T | 67/22.5 |
| C608 | 4030007050 | S.CER | C1608 CH 1H 220J-T | T | 68.3/16.7 |
| C651 | 4550007480 | S.TAN | F930J106MAABMA | B | 60.1/9.2 |
| C652 | 4030018510 | S.CER | C2012 CH 1H 682J-T | T | 61.9/6.6 |
| C653 | 4550007500 | S.TAN | F931D106MBABMA | B | 59.9/2.6 |
| C654 | 4030011600 | S.CER | C1608 JB 1E 104K-T | T | 64/2.5 |
| C655 | 4030011600 | S.CER | C1608 JB 1E 104K-T | T | 67.7/2.5 |
| C656 | 4550007500 | S.TAN | F931D106MBABMA | B | 59.9/6 |
| C657 | 4030018510 | S.CER | C2012 CH 1H 682J-T | T | 68.3/12.2 |
| C658 | 4030007050 | S.CER | C1608 CH 1H 220J-T | T | 71.4/6.9 |
| C701 | 4030017840 | S.CER | C2012 CH 1H 222J-T | T | 74.3/21.1 |
| C702 | 4030017840 | S.CER | C2012 CH 1H 222J-T | T | 78.9/13.4 |
| C703 | 4550007500 | S.TAN | F931D106MBABMA | B | 75.3/15.7 |
| C704 | 4030011600 | S.CER | C1608 JB 1E 104K-T | T | 75.9/12.8 |
| C705 | 4030011600 | S.CER | C1608 JB 1E 104K-T | T | 79.4/20.6 |
| C706 | 4550007500 | S.TAN | F931D106MBABMA | B | 75.6/21.1 |
| C707 | 4030007050 | S.CER | C1608 CH 1H 220J-T | T | 78.7/18 |
| C771 | 4550007480 | S.TAN | F930J106MAABMA | B | 49.8/14.1 |
| C772 | 4030011600 | S.CER | C1608 JB 1E 104K-T | T | 49.5/15 |
| C773 | 4550007480 | S.TAN | F930J106MAABMA | B | 55/18.1 |
| C801 | 4030011600 | S.CER | C1608 JB 1E 104K-T | T | 77.4/24 |
| C921 | 4550007510 | S.TAN | F931C106MBABMA | B | 66.5/2.6 |
| C922 | 4030011600 | S.CER | C1608 JB 1E 104K-T | T | 71/3.6 |
| C923 | 4550002830 | S.TAN | TEESVD2 1V 685M12R | B | 78.3/6.5 |
| C924 | 4030011600 | S.CER | C1608 JB 1E 104K-T | T | 80.1/8.6 |
| C925 | 4550007510 | S.TAN | F931C106MBABMA | B | 67.1/10.5 |
| C926 | 4030011600 | S.CER | C1608 JB 1E 104K-T | T | 71.8/12.7 |
| C927 | 4550002830 | S.TAN | TEESVD2 1V 685M12R | B | 72.6/6.5 |
| C928 | 4030011600 | S.CER | C1608 JB 1E 104K-T | T | 79.6/5.2 |
| C961 | 4030011600 | S.CER | C1608 JB 1E 104K-T | B | 11.2/15.7 |
| C962 | 4550007520 | S.TAN | F931A106MAABMA | B | 12/18.8 |
| C963 | 4030011600 | S.CER | C1608 JB 1E 104K-T | B | 10.7/25.4 |
| C964 | 4550007520 | S.TAN | F931A106MAABMA | B | 11.4/29.4 |
| J921 | 6910013900 | CNR | IMSA-9180S-22A | | |
| J961 | 6910012460 | CNR | IMSA-9180S-30A | | |

## [DSP-B BOARD]

| REF NO. | ORDER NO. | DESCRIPTION | | M. | H/V LOCATION |
|---|---|---|---|---|---|
| IC1 | 1140012211 | S.IC | TMS320C6713BZDP225 | T | 28.1/20.4 |
| IC151 | 1130008361 | S.IC | TC7SHU04FU (TE85L,JF) | B | 45.5/8.1 |
| IC171 | 1130008041 | S.IC | TC7SH04FU (TE85L,JF) | T | 41.3/4.6 |
| IC181 | 1130011150 | S.IC | SN74AHC2G08HDCTR | T | 30.2/1.9 |
| IC191 | 1130011150 | S.IC | SN74AHC2G08HDCTR | T | 24/3.5 |
| IC201 | 1130013492 | S.IC | AT29LV040A-15TU | B | 29/42 |
| IC203 | 1110006411 | S.IC | R3111N111A-TR-F | T | 30/36.5 |
| IC301 | 1110006100 | S.IC | NJM5534MD-TE1 | T | 72.3/44.7 |
| IC331 | 1130009981 | S.IC | TC7W53FK (TE85L,F) | T | 76.9/34.1 |
| IC341 | 1110006100 | S.IC | NJM5534MD-TE1 | T | 70.3/35.5 |
| IC371 | 1110006100 | S.IC | NJM5534MD-TE1 | T | 59.4/44.3 |
| IC401 | 1110006111 | S.IC | AK5394AVSP/P | T | 54.2/31 |
| IC451 | 1130006891 | S.IC | TC7S04FU (TE85R,F) | T | 43.5/41 |
| IC452 | 1130012160 | S.IC | SN74LVC1GU04DCKR | T | 42.8/38.5 |
| IC501 | 1110001901 | S.IC | uPC4570G2-E1-A | T | 71.6/27.4 |
| IC551 | 1130013090 | S.IC | AK4396VFP-E2/P | T | 54.6/7.3 |
| IC601 | 1110006100 | S.IC | NJM5534MD-TE1 | T | 63.6/17.3 |
| IC651 | 1110006100 | S.IC | NJM5534MD-TE1 | T | 66.8/7.2 |
| IC701 | 1110006100 | S.IC | NJM5534MD-TE1 | T | 74.1/17.5 |
| IC771 | 1110004770 | S.IC | BU9480F-E2 | T | 51.7/18.4 |
| Q1 | 1590000680 | S.TR | DTC114EUA T106 | T | 45.7/16.5 |
| D501 | 1730002320 | S.ZEN | MA8051-M (TX) | B | 76.5/29.5 |
| FI101 | 2040000790 | S.LC | EXCCET103U | T | 36.5/2.8 |
| X151 | 6050011660 | S.XTL | CR-754 (30.000 MHz) | B | 40.5/2.9 |
| L1 | 6200003950 | S.COL | HF50ACC 322513-T | B | 43.2/34.8 |
| L2 | 6180003501 | S.COL | SLF6028T-100M1R3-PF | B | 13.6/35.7 |
| L3 | 6200003640 | S.COL | MLF1608E 100K-T | B | 12.2/8.2 |
| L401 | 6200003950 | S.COL | HF50ACC 322513-T | T | 49.3/42.9 |
| L921 | 6200003950 | S.COL | HF50ACC 322513-T | T | 73.7/4.4 |
| L922 | 6200003950 | S.COL | HF50ACC 322513-T | T | 77.9/9.5 |
| L924 | 6200003950 | S.COL | HF50ACC 322513-T | T | 74.1/9.5 |
| L925 | 6200003950 | S.COL | HF50ACC 322513-T | T | 77.5/4.4 |
| L961 | 6200003950 | S.COL | HF50ACC 322513-T | B | 11.3/12.2 |
| L962 | 6200003950 | S.COL | HF50ACC 322513-T | B | 12.8/24.6 |
| R1 | 7030003560 | S.RES | ERJ3GEYJ 103 V (10 k) | B | 42.5/22.3 |
| R2 | 7030003560 | S.RES | ERJ3GEYJ 103 V (10 k) | B | 41.8/24.2 |
| R3 | 7030003560 | S.RES | ERJ3GEYJ 103 V (10 k) | B | 42.5/21 |
| R4 | 7030003560 | S.RES | ERJ3GEYJ 103 V (10 k) | B | 41.8/13.7 |
| R5 | 7030003440 | S.RES | ERJ3GEYJ 102 V (1 k) | B | 23.2/6 |
| R6 | 7030003440 | S.RES | ERJ3GEYJ 102 V (1 k) | B | 21.9/6 |
| R7 | 7030003640 | S.RES | ERJ3GEYJ 473 V (47 k) | B | 20/6.7 |
| R8 | 7030003440 | S.RES | ERJ3GEYJ 102 V (1 k) | B | 14.1/8.2 |
| R9 | 7030003640 | S.RES | ERJ3GEYJ 473 V (47 k) | B | 14.5/11.6 |
| R10 | 7030003640 | S.RES | ERJ3GEYJ 473 V (47 k) | T | 43.8/13.1 |
| R11 | 7030003460 | S.RES | ERJ3GEYJ 152 V (1.5 k) | B | 48.2/9.7 |
| R12 | 7030003560 | S.RES | ERJ3GEYJ 103 V (10 k) | B | 26.8/13.3 |
| R151 | 7030003320 | S.RES | ERJ3GEYJ 101 V (100) | T | 44.3/5.3 |
| R152 | 7030003800 | S.RES | ERJ3GEYJ 105 V (1 M) | B | 43.5/6.2 |
| R171 | 7030003320 | S.RES | ERJ3GEYJ 101 V (100) | T | 41.3/1.4 |
| R181 | 7030003560 | S.RES | ERJ3GEYJ 103 V (10 k) | T | 9.1/7 |
| R182 | 7030003560 | S.RES | ERJ3GEYJ 103 V (10 k) | T | 6.3/7 |
| R183 | 7030003560 | S.RES | ERJ3GEYJ 103 V (10 k) | T | 11.9/8.3 |
| R184 | 7030003560 | S.RES | ERJ3GEYJ 103 V (10 k) | T | 11.9/7 |
| R201 | 7030003860 | S.RES | ERJ3GE JPW V | T | 30.8/39.2 |
| R301 | 7030003860 | S.RES | ERJ3GE JPW V | T | 79.5/38.4 |
| R302 | 7030009591 | S.RES | ERA3YED 472V (4.7 k) | T | 77.6/46.9 |
| R303 | 7030009591 | S.RES | ERA3YED 472V (4.7 k) | T | 75.7/46.1 |
| R304 | 7030003320 | S.RES | ERJ3GEYJ 101 V (100) | T | 78.1/40.7 |
| R305 | 7030003860 | S.RES | ERJ3GE JPW V | T | 75.7/43.5 |
| R306 | 7030003320 | S.RES | ERJ3GEYJ 101 V (100) | T | 68.9/46.1 |
| R331 | 7030003500 | S.RES | ERJ3GEYJ 332 V (3.3 k) | T | 64.4/39.9 |
| R332 | 7030003480 | S.RES | ERJ3GEYJ 222 V (2.2 k) | T | 65.7/39.9 |
| R333 | 7030003640 | S.RES | ERJ3GEYJ 473 V (47 k) | T | 75/33.2 |
| R341 | 7030003320 | S.RES | ERJ3GEYJ 101 V (100) | T | 73.7/34.8 |
| R342 | 7030003320 | S.RES | ERJ3GEYJ 101 V (100) | T | 66.9/37.3 |
| R343 | 7030006601 | S.RES | ERA3YED 272V (2.7 k) | T | 73.7/37.4 |
| R344 | 7030010390 | S.RES | ERA3YED 821V (820) | T | 65.6/33.6 |
| R345 | 7030009691 | S.RES | ERA3YED 101V (100) | T | 66.2/31.7 |
| R371 | 7030003320 | S.RES | ERJ3GEYJ 101 V (100) | T | 63.4/43.8 |
| R372 | 7030003320 | S.RES | ERJ3GEYJ 101 V (100) | T | 55.3/46.3 |
| R373 | 7030006601 | S.RES | ERA3YED 272V (2.7 k) | T | 63.4/45.6 |
| R374 | 7030010390 | S.RES | ERA3YED 821V (820) | T | 54.7/41.8 |
| R375 | 7030009691 | S.RES | ERA3YED 101V (100) | T | 56/40.5 |
| R401 | 7030009591 | S.RES | ERA3YED 472V (4.7 k) | T | 53.1/42.5 |
| R402 | 7030009591 | S.RES | ERA3YED 472V (4.7 k) | T | 51.8/44 |
| R403 | 7030003640 | S.RES | ERJ3GEYJ 473 V (47 k) | T | 54.1/38.7 |
| R404 | 7030003200 | S.RES | ERJ3GEYJ 100 V (10) | T | 50/40 |
| R405 | 7030003320 | S.RES | ERJ3GEYJ 101 V (100) | T | 51.1/38.1 |
| R406 | 7030003640 | S.RES | ERJ3GEYJ 473 V (47 k) | T | 49.8/38.1 |
| R407 | 7030003460 | S.RES | ERJ3GEYJ 152 V (1.5 k) | B | 46.8/36 |
| R409 | 7030003640 | S.RES | ERJ3GEYJ 473 V (47 k) | T | 52.3/23.8 |
| R410 | 7030003640 | S.RES | ERJ3GEYJ 473 V (47 k) | T | 47.2/23.8 |
| R411 | 7030003640 | S.RES | ERJ3GEYJ 473 V (47 k) | T | 49.8/23.8 |
| R412 | 7030003520 | S.RES | ERJ3GEYJ 472 V (4.7 k) | T | 56/22.3 |
| R413 | 7030003520 | S.RES | ERJ3GEYJ 472 V (4.7 k) | T | 54.1/21.9 |
| R451 | 7030003800 | S.RES | ERJ3GEYJ 105 V (1 M) | T | 42.6/36.6 |
| R501 | 7030006521 | S.RES | ERA3YED 561V (560) | T | 76.1/29.9 |
| R502 | 7030003360 | S.RES | ERJ3GEYJ 221 V (220) | T | 70.3/23.4 |
| R503 | 7030003380 | S.RES | ERJ3GEYJ 331 V (330) | T | 65.3/28.9 |
| R504 | 7030003680 | S.RES | ERJ3GEYJ 104 V (100 k) | T | 65.3/27.6 |
| R551 | 7030003320 | S.RES | ERJ3GEYJ 101 V (100) | T | 49.5/8.6 |
| R559 | 7030003640 | S.RES | ERJ3GEYJ 473 V (47 k) | T | 59.8/10.5 |
| R601 | 7030006521 | S.RES | ERA3YED 561V (560) | T | 63.1/20.7 |
| R602 | 7030007661 | S.RES | ERA3YED 331V (330) | T | 64/22 |
| R603 | 7030007661 | S.RES | ERA3YED 331V (330) | T | 59/19.8 |
| R604 | 7030009961 | S.RES | ERA3YED 221V (220) | T | 68.7/21 |
| R605 | 7030007661 | S.RES | ERA3YED 331V (330) | T | 65.7/20.7 |
| R606 | 7030003320 | S.RES | ERJ3GEYJ 101 V (100) | T | 67.1/13.9 |

M.=Mounted side (T: Mounted on the Top side, B: Mounted on the Bottom side)
S.=Surface mount

## [DSP-B BOARD]

| REF NO. | ORDER NO. | DESCRIPTION | M. | H/V LOCATION |
|---|---|---|---|---|
| R607 | 7030003320 | S.RES ERJ3GEYJ 101 V (100) | T | 61.9/13.9 |
| R651 | 7030006521 | S.RES ERA3YED 561V (560) | T | 64.3/10.6 |
| R652 | 7030007661 | S.RES ERA3YED 331V (330) | T | 65.3/11.9 |
| R653 | 7030007661 | S.RES ERA3YED 331V (330) | T | 62.1/10.1 |
| R654 | 7030009961 | S.RES ERA3YED 221V (220) | T | 69.5/10.6 |
| R655 | 7030007661 | S.RES ERA3YED 331V (330) | T | 66.9/10.6 |
| R658 | 7030003320 | S.RES ERJ3GEYJ 101 V (100) | T | 67.7/3.8 |
| R659 | 7030003320 | S.RES ERJ3GEYJ 101 V (100) | T | 64/3.8 |
| R701 | 7030010770 | S.RES ERA3YED 681V (680) | T | 71.3/21 |
| R702 | 7030009861 | S.RES ERA3YED 471V (470) | T | 74.8/22.7 |
| R703 | 7030010770 | S.RES ERA3YED 681V (680) | T | 70.5/13.5 |
| R704 | 7030009861 | S.RES ERA3YED 471V (470) | T | 77.2/13.3 |
| R705 | 7030009691 | S.RES ERA3YED 101V (100) | T | 77.4/22.2 |
| R706 | 7030003320 | S.RES ERJ3GEYJ 101 V (100) | T | 77.3/20.9 |
| R707 | 7030003320 | S.RES ERJ3GEYJ 101 V (100) | T | 74.1/14.1 |
| R801 | 7030003650 | S.RES ERJ3GEYJ 563 V (56 k) | T | 78/27.2 |
| R802 | 7030003680 | S.RES ERJ3GEYJ 104 V (100 k) | T | 78/25.9 |
| R803 | 7030003480 | S.RES ERJ3GEYJ 222 V (2.2 k) | T | 78.7/24 |
| R804 | 7030003490 | S.RES ERJ3GEYJ 272 V (2.7 k) | T | 78/29.8 |
| R805 | 7030003340 | S.RES ERJ3GEYJ 151 V (150) | T | 78/28.5 |
| R901 | 7030003860 | S.RES ERJ3GE JPW V | T | 46.6/21 |
| R962 | 7030003320 | S.RES ERJ3GEYJ 101 V (100) | T | 12.1/16.8 |
| R963 | 7030003320 | S.RES ERJ3GEYJ 101 V (100) | T | 11.9/15.5 |
| R964 | 7030003320 | S.RES ERJ3GEYJ 101 V (100) | T | 11.9/14.2 |
| R965 | 7030003320 | S.RES ERJ3GEYJ 101 V (100) | T | 11.9/12.9 |
| R967 | 7030003320 | S.RES ERJ3GEYJ 101 V (100) | T | 13.6/37.8 |
| R968 | 7030003320 | S.RES ERJ3GEYJ 101 V (100) | T | 11.9/11.6 |
| R969 | 7030003320 | S.RES ERJ3GEYJ 101 V (100) | T | 13.6/48.2 |
| R970 | 7030003320 | S.RES ERJ3GEYJ 101 V (100) | T | 13.6/46.9 |
| R971 | 7030003320 | S.RES ERJ3GEYJ 101 V (100) | T | 13.6/45.6 |
| R972 | 7030003320 | S.RES ERJ3GEYJ 101 V (100) | T | 13.6/44.3 |
| R973 | 7030003320 | S.RES ERJ3GEYJ 101 V (100) | T | 13.6/43 |
| R974 | 7030003320 | S.RES ERJ3GEYJ 101 V (100) | T | 13.6/41.7 |
| R975 | 7030003320 | S.RES ERJ3GEYJ 101 V (100) | T | 13.6/40.4 |
| R976 | 7030003320 | S.RES ERJ3GEYJ 101 V (100) | T | 13.6/39.1 |
| | | | | |
| C1 | 4030011600 | S.CER C1608 JB 1E 104K-T | B | 15.2/30.5 |
| C2 | 4030011600 | S.CER C1608 JB 1E 104K-T | B | 41.8/30.7 |
| C3 | 4030011600 | S.CER C1608 JB 1E 104K-T | B | 18/32.9 |
| C4 | 4030011600 | S.CER C1608 JB 1E 104K-T | B | 39.4/32.9 |
| C5 | 4030011600 | S.CER C1608 JB 1E 104K-T | B | 23/26.3 |
| C6 | 4030011600 | S.CER C1608 JB 1E 104K-T | B | 24.3/26.3 |
| C7 | 4030011600 | S.CER C1608 JB 1E 104K-T | B | 28.6/26.3 |
| C8 | 4030011600 | S.CER C1608 JB 1E 104K-T | B | 29.9/26.3 |
| C9 | 4030011600 | S.CER C1608 JB 1E 104K-T | B | 33.8/26.3 |
| C10 | 4030011600 | S.CER C1608 JB 1E 104K-T | B | 21.5/23.3 |
| C11 | 4030011600 | S.CER C1608 JB 1E 104K-T | B | 36/23.7 |
| C12 | 4030011600 | S.CER C1608 JB 1E 104K-T | T | 13.7/21 |
| C13 | 4030011600 | S.CER C1608 JB 1E 104K-T | B | 22.2/20.2 |
| C14 | 4030011600 | S.CER C1608 JB 1E 104K-T | B | 36/21.1 |
| C15 | 4030011600 | S.CER C1608 JB 1E 104K-T | B | 22.2/18.9 |
| C16 | 4030011600 | S.CER C1608 JB 1E 104K-T | B | 36/18.5 |
| C17 | 4030011600 | S.CER C1608 JB 1E 104K-T | T | 43.5/20 |
| C18 | 4030011600 | S.CER C1608 JB 1E 104K-T | B | 22.2/15.2 |
| C19 | 4030011600 | S.CER C1608 JB 1E 104K-T | B | 34.7/14.4 |
| C20 | 4030011600 | S.CER C1608 JB 1E 104K-T | B | 23.1/13.3 |
| C21 | 4030011600 | S.CER C1608 JB 1E 104K-T | B | 24.4/13.3 |
| C22 | 4030011600 | S.CER C1608 JB 1E 104K-T | B | 28.1/13.3 |
| C23 | 4030011600 | S.CER C1608 JB 1E 104K-T | B | 32.6/12.6 |
| C24 | 4030011600 | S.CER C1608 JB 1E 104K-T | B | 35.2/12.6 |
| C25 | 4030011600 | S.CER C1608 JB 1E 104K-T | B | 17.3/6.7 |
| C26 | 4030011600 | S.CER C1608 JB 1E 104K-T | B | 33.1/6.8 |
| C27 | 4030011600 | S.CER C1608 JB 1E 104K-T | B | 41.8/11.1 |
| C28 | 4030011600 | S.CER C1608 JB 1E 104K-T | B | 15.4/8.2 |
| C29 | 4030011600 | S.CER C1608 JB 1E 104K-T | B | 40.9/6.8 |
| C30 | 4030011600 | S.CER C1608 JB 1E 104K-T | T | 35.2/5 |
| C31 | 4030011600 | S.CER C1608 JB 1E 104K-T | T | 28.5/5.2 |
| C32 | 4030011600 | S.CER C1608 JB 1E 104K-T | T | 37.8/5 |
| C33 | 4030011600 | S.CER C1608 JB 1E 104K-T | T | 18.5/35.2 |
| C34 | 4030011600 | S.CER C1608 JB 1E 104K-T | T | 36.4/35 |
| C35 | 4030011600 | S.CER C1608 JB 1E 104K-T | B | 26/32.9 |
| C36 | 4030011600 | S.CER C1608 JB 1E 104K-T | B | 29.3/32.9 |
| C37 | 4030011600 | S.CER C1608 JB 1E 104K-T | B | 36.8/32.9 |
| C38 | 4030011600 | S.CER C1608 JB 1E 104K-T | B | 15.2/27.9 |
| C39 | 4030011600 | S.CER C1608 JB 1E 104K-T | B | 22.4/32.9 |
| C40 | 4030011600 | S.CER C1608 JB 1E 104K-T | B | 26/26.3 |
| C41 | 4030011600 | S.CER C1608 JB 1E 104K-T | B | 21.7/26.3 |
| C42 | 4030011600 | S.CER C1608 JB 1E 104K-T | B | 27.3/26.3 |
| C43 | 4030011600 | S.CER C1608 JB 1E 104K-T | B | 32.5/26.3 |
| C44 | 4030011600 | S.CER C1608 JB 1E 104K-T | B | 35.1/26.3 |
| C45 | 4030011600 | S.CER C1608 JB 1E 104K-T | B | 41.8/26.8 |
| C46 | 4030011600 | S.CER C1608 JB 1E 104K-T | B | 15.3/24.9 |
| C47 | 4030011600 | S.CER C1608 JB 1E 104K-T | T | 43.5/29 |
| C48 | 4030011600 | S.CER C1608 JB 1E 104K-T | B | 22.2/21.5 |
| C49 | 4030011600 | S.CER C1608 JB 1E 104K-T | B | 41.8/17.9 |
| C50 | 4030011600 | S.CER C1608 JB 1E 104K-T | B | 22.2/17.6 |
| C51 | 4030011600 | S.CER C1608 JB 1E 104K-T | B | 36/15.9 |
| C52 | 4030011600 | S.CER C1608 JB 1E 104K-T | B | 15.8/11.6 |
| C53 | 4030011600 | S.CER C1608 JB 1E 104K-T | B | 21.8/13.3 |
| C54 | 4030011600 | S.CER C1608 JB 1E 104K-T | T | 42.9/9.9 |
| C55 | 4030011600 | S.CER C1608 JB 1E 104K-T | B | 29.4/13.3 |
| C56 | 4030011600 | S.CER C1608 JB 1E 104K-T | B | 25/6.7 |
| C57 | 4030011600 | S.CER C1608 JB 1E 104K-T | B | 29.8/6.8 |
| C58 | 4030011600 | S.CER C1608 JB 1E 104K-T | B | 38.3/6.8 |
| C59 | 4030011600 | S.CER C1608 JB 1E 104K-T | T | 20.3/5.3 |
| C60 | 4510007130 | S.ELE EEFCD 0J 470R | T | 19.6/44 |
| C61 | 4550007480 | S.TAN F930J106MAABMA | B | 44.8/29.7 |
| C62 | 4510007130 | S.ELE EEFCD 0J 470R | T | 25.7/43.9 |
| C101 | 4030011600 | S.CER C1608 JB 1E 104K-T | B | 35.7/6.8 |
| C102 | 4550007480 | S.TAN F930J106MAABMA | B | 30.6/2.6 |
| C151 | 4030011600 | S.CER C1608 JB 1E 104K-T | B | 45.6/10 |
| C152 | 4030007030 | S.CER C1608 CH 1H 150J-T | B | 46.1/6.2 |
| C153 | 4030007030 | S.CER C1608 CH 1H 150J-T | B | 43.1/8 |
| C171 | 4030011600 | S.CER C1608 JB 1E 104K-T | T | 41.3/2.7 |

## [DSP-B BOARD]

| REF NO. | ORDER NO. | DESCRIPTION | M. | H/V LOCATION |
|---|---|---|---|---|
| C181 | 4030011600 | S.CER C1608 JB 1E 104K-T | T | 31/4.3 |
| C191 | 4030011600 | S.CER C1608 JB 1E 104K-T | T | 22.6/1.2 |
| C201 | 4030011600 | S.CER C1608 JB 1E 104K-T | B | 41.4/43.3 |
| C301 | 4340000250 | S.MLR ECHU 1C 104JX5 | T | 77.9/44 |
| C302 | 4550007500 | S.TAN F931D106MBABMA | B | 76.5/43.7 |
| C303 | 4030011600 | S.CER C1608 JB 1E 104K-T | T | 75.6/40.9 |
| C304 | 4550007500 | S.TAN F931D106MBABMA | B | 71.7/43.7 |
| C305 | 4030011600 | S.CER C1608 JB 1E 104K-T | T | 67.6/46.1 |
| C306 | 4030007050 | S.CER C1608 CH 1H 220J-T | T | 72.4/40.1 |
| C331 | 4030011600 | S.CER C1608 JB 1E 104K-T | T | 78.8/32.8 |
| C332 | 4550007520 | S.TAN F931A106MAABMA | B | 67.9/35.2 |
| C333 | 4030011600 | S.CER C1608 JB 1E 104K-T | T | 79.5/35.8 |
| C341 | 4550007500 | S.TAN F931D106MBABMA | B | 73.1/32.4 |
| C342 | 4030011600 | S.CER C1608 JB 1E 104K-T | T | 73.7/31.6 |
| C343 | 4550007500 | S.TAN F931D106MBABMA | B | 73.2/38.1 |
| C344 | 4030011600 | S.CER C1608 JB 1E 104K-T | T | 65.6/37.3 |
| C345 | 4340000250 | S.MLR ECHU 1C 104JX5 | T | 76.7/38.1 |
| C346 | 4030018580 | S.CER C1608 CH 1H 821J-T | T | 66.9/33.6 |
| C347 | 4030011600 | S.CER C1608 JB 1E 104K-T | T | 66.1/35.5 |
| C348 | 4030007050 | S.CER C1608 CH 1H 220J-T | T | 70.9/30.9 |
| C371 | 4550007500 | S.TAN F931D106MBABMA | B | 59.8/43.8 |
| C372 | 4030011600 | S.CER C1608 JB 1E 104K-T | T | 63.4/42.5 |
| C373 | 4550007500 | S.TAN F931D106MBABMA | B | 50.1/43.9 |
| C374 | 4030011600 | S.CER C1608 JB 1E 104K-T | T | 53.4/45.5 |
| C375 | 4340000250 | S.MLR ECHU 1C 104JX5 | T | 68.1/42.6 |
| C376 | 4030018580 | S.CER C1608 CH 1H 821J-T | T | 56/43.1 |
| C377 | 4030011600 | S.CER C1608 JB 1E 104K-T | T | 55.3/45 |
| C378 | 4030007050 | S.CER C1608 CH 1H 220J-T | T | 59.4/39.5 |
| C401 | 4550007520 | S.TAN F931A106MAABMA | B | 54.9/43.8 |
| C402 | 4030017840 | S.CER C2012 CH 1H 222J-T | T | 58.1/37.6 |
| C403 | 4550007480 | S.TAN F930J106MAABMA | B | 63.1/35.2 |
| C404 | 4030011810 | S.CER C1608 JB 1A 224K-T | T | 61.5/37.4 |
| C405 | 4550007480 | S.TAN F930J106MAABMA | B | 58.3/35.2 |
| C406 | 4030011810 | S.CER C1608 JB 1A 224K-T | T | 63.5/36.7 |
| C407 | 4550007480 | S.TAN F930J106MAABMA | B | 50.4/36.1 |
| C408 | 4030011600 | S.CER C1608 JB 1E 104K-T | T | 54.1/37.4 |
| C409 | 4030011600 | S.CER C1608 JB 1E 104K-T | T | 54.1/23.2 |
| C410 | 4030009000 | S.CER C2012 JB 1C 224K-T | T | 62.1/24.2 |
| C411 | 4550007480 | S.TAN F930J106MAABMA | B | 63.1/28.4 |
| C412 | 4550007480 | S.TAN F930J106MAABMA | B | 58.3/29.1 |
| C413 | 4030009000 | S.CER C2012 JB 1C 224K-T | T | 59/22.5 |
| C414 | 4030011600 | S.CER C1608 JB 1E 104K-T | T | 54.1/24.5 |
| C415 | 4550007520 | S.TAN F931A106MAABMA | B | 53/26.5 |
| C416 | 4550007520 | S.TAN F931A106MAABMA | B | 53/31.3 |
| C417 | 4030017840 | S.CER C2012 CH 1H 222J-T | T | 58/24.2 |
| C450 | 4030011600 | S.CER C1608 JB 1E 104K-T | T | 43.1/35.3 |
| C451 | 4030011600 | S.CER C1608 JB 1E 104K-T | T | 43.6/42.9 |
| C452 | 4030006860 | S.CER C1608 JB 1H 102K-T | T | 40.8/39.6 |
| C501 | 4030011600 | S.CER C1608 JB 1E 104K-T | T | 74.8/24 |
| C502 | 4550007500 | S.TAN F931D106MBABMA | B | 77.5/33.1 |
| C503 | 4030011600 | S.CER C1608 JB 1E 104K-T | T | 71.6/23.4 |
| C504 | 4550007500 | S.TAN F931D106MBABMA | B | 67.9/29.1 |
| C506 | 4030007090 | S.CER C1608 CH 1H 470J-T | T | 67.1/28.4 |
| C507 | 4030007090 | S.CER C1608 CH 1H 470J-T | T | 76.1/27.3 |
| C551 | 4550007520 | S.TAN F931A106MAABMA | B | 50.3/8.7 |
| C552 | 4030011600 | S.CER C1608 JB 1E 104K-T | T | 49.5/5.5 |
| C553 | 4550007520 | S.TAN F931A106MAABMA | B | 55/13.3 |
| C554 | 4030011600 | S.CER C1608 JB 1E 104K-T | T | 60/7.6 |
| C555 | 4030011600 | S.CER C1608 JB 1E 104K-T | T | 59.8/4.6 |
| C556 | 4550007480 | S.TAN F930J106MAABMA | B | 53.6/7.1 |
| C557 | 4030011600 | S.CER C1608 JB 1E 104K-T | T | 60.7/2.8 |
| C558 | 4550007520 | S.TAN F931A106MAABMA | B | 53.6/4.3 |
| C601 | 4550007480 | S.TAN F930J106MAABMA | B | 61.3/17.2 |
| C602 | 4030018510 | S.CER C2012 CH 1H 682J-T | T | 58.8/16.5 |
| C603 | 4550007500 | S.TAN F931D106MBABMA | B | 68.2/15 |
| C604 | 4030011600 | S.CER C1608 JB 1E 104K-T | T | 58.2/14.2 |
| C605 | 4030011600 | S.CER C1608 JB 1E 104K-T | T | 64.5/13.9 |
| C606 | 4550007500 | S.TAN F931D106MBABMA | B | 69.2/19.2 |
| C607 | 4030018510 | S.CER C2012 CH 1H 682J-T | T | 67/22.5 |
| C608 | 4030007050 | S.CER C1608 CH 1H 220J-T | T | 68.3/16.7 |
| C651 | 4550007480 | S.TAN F930J106MAABMA | B | 60.1/9.2 |
| C652 | 4030018510 | S.CER C2012 CH 1H 682J-T | T | 61.9/6.6 |
| C653 | 4550007500 | S.TAN F931D106MBABMA | B | 59.9/2.6 |
| C654 | 4030011600 | S.CER C1608 JB 1E 104K-T | T | 64/2.5 |
| C655 | 4030011600 | S.CER C1608 JB 1E 104K-T | T | 67.7/2.5 |
| C656 | 4550007500 | S.TAN F931D106MBABMA | B | 59.9/6 |
| C657 | 4030018510 | S.CER C2012 CH 1H 682J-T | T | 68.3/12.2 |
| C658 | 4030007050 | S.CER C1608 CH 1H 220J-T | T | 71.4/6.9 |
| C701 | 4030017840 | S.CER C2012 CH 1H 222J-T | T | 74.3/21.1 |
| C702 | 4030017840 | S.CER C2012 CH 1H 222J-T | T | 78.9/13.4 |
| C703 | 4550007500 | S.TAN F931D106MBABMA | B | 75.3/15.7 |
| C704 | 4030011600 | S.CER C1608 JB 1E 104K-T | T | 75.9/12.8 |
| C705 | 4030011600 | S.CER C1608 JB 1E 104K-T | T | 79.4/20.6 |
| C706 | 4550007500 | S.TAN F931D106MBABMA | B | 75.6/21.1 |
| C707 | 4030007050 | S.CER C1608 CH 1H 220J-T | T | 78.7/18 |
| C771 | 4550007480 | S.TAN F930J106MAABMA | B | 49.8/14.1 |
| C772 | 4030011600 | S.CER C1608 JB 1E 104K-T | T | 49.5/15 |
| C773 | 4550007480 | S.TAN F930J106MAABMA | B | 55/18.1 |
| C801 | 4030011600 | S.CER C1608 JB 1E 104K-T | T | 77.4/24 |
| C921 | 4550007510 | S.TAN F931C106MBABMA | B | 66.5/2.6 |
| C922 | 4030011600 | S.CER C1608 JB 1E 104K-T | T | 71/3.6 |
| C923 | 4550002830 | S.TAN TEESVD2 1V 685M12R | B | 78.3/6.5 |
| C924 | 4030011600 | S.CER C1608 JB 1E 104K-T | T | 80.1/8.6 |
| C925 | 4550007510 | S.TAN F931C106MBABMA | B | 67.1/10.5 |
| C926 | 4030011600 | S.CER C1608 JB 1E 104K-T | T | 71.8/12.7 |
| C927 | 4550002830 | S.TAN TEESVD2 1V 685M12R | B | 72.6/6.5 |
| C928 | 4030011600 | S.CER C1608 JB 1E 104K-T | T | 79.6/5.2 |
| C961 | 4030011600 | S.CER C1608 JB 1E 104K-T | B | 11.2/15.7 |
| C962 | 4550007520 | S.TAN F931A106MAABMA | B | 12/18.8 |
| C963 | 4030011600 | S.CER C1608 JB 1E 104K-T | B | 10.7/25.4 |
| C964 | 4550007520 | S.TAN F931A106MAABMA | B | 11.4/29.4 |
| | | | | |
| J921 | 6910013900 | CNR IMSA-9180S-22A | | |
| J961 | 6910012460 | CNR IMSA-9180S-30A | | |

M.=Mounted side (T: Mounted on the Top side, B: Mounted on the Bottom side)
S.=Surface mount

## [DSP-TX BOARD]

| REF NO. | ORDER NO. | DESCRIPTION | | M. | H/V LOCATION |
|---|---|---|---|---|---|
| IC1 | 1140012211 | S.IC | TMS320C6713BZDP225 | T | 28.1/20.4 |
| IC151 | 1130008361 | S.IC | TC7SHU04FU (TE85L,JF) | B | 45.5/8.1 |
| IC171 | 1130008041 | S.IC | TC7SH04FU (TE85L,JF) | T | 41.3/4.6 |
| IC181 | 1130011150 | S.IC | SN74AHC2G08HDCTR | T | 30.2/1.9 |
| IC191 | 1130011150 | S.IC | SN74AHC2G08HDCTR | T | 24/3.5 |
| IC201 | 1130012205 | S.IC | AT29LV040A-15TU (SX-2590F-4) | B | 29.3/42 |
| IC203 | 1110006411 | S.IC | R3111N111A-TR-F | T | 30.2/36.6 |
| IC301 | 1110006100 | S.IC | NJM5534MD-TE1 | T | 72.3/44.4 |
| IC341 | 1110006100 | S.IC | NJM5534MD-TE1 | T | 72.1/35.2 |
| IC371 | 1110006100 | S.IC | NJM5534MD-TE1 | T | 59.4/44.4 |
| IC401 | 1110006111 | S.IC | AK5394AVSP/P | T | 54.2/31 |
| IC451 | 1130006891 | S.IC | TC7S04FU (TE85R,F) | T | 42.8/35.8 |
| IC452 | 1130012160 | S.IC | SN74LVC1GU04DCKR | T | 42.3/39.8 |
| IC551 | 1190002090 | S.IC | AD1854JRSZRL | T | 53.3/5.8 |
| IC601 | 1110006100 | S.IC | NJM5534MD-TE1 | T | 53.1/15.2 |
| IC651 | 1110006100 | S.IC | NJM5534MD-TE1 | T | 65.3/5 |
| IC701 | 1110006100 | S.IC | NJM5534MD-TE1 | T | 63.2/14.8 |
| IC801 | 1110006100 | S.IC | NJM5534MD-TE1 | T | 68.4/25.8 |
| IC831 | 1110006100 | S.IC | NJM5534MD-TE1 | T | 73.1/15.8 |
| IC871 | 1110006100 | S.IC | NJM5534MD-TE1 | T | 77/26.1 |
| FI101 | 2040000790 | S.LC | EXCCET103U | T | 36.5/2.2 |
| X151 | 6050011660 | S.XTL | CR-754 (30.000 MHz) | B | 40.5/2.9 |
| L1 | 6200003950 | S.COL | HF50ACC 322513-T | B | 45/39.6 |
| L2 | 6180003501 | S.COL | SLF6028T-100M1R3-PF | B | 13.6/35.4 |
| L3 | 6200003640 | S.COL | MLF1608E 100K-T | B | 10.9/7.7 |
| L401 | 6200003950 | S.COL | HF50ACC 322513-T | T | 49.4/43.1 |
| L921 | 6200003950 | S.COL | HF50ACC 322513-T | T | 75/3.7 |
| L922 | 6200003950 | S.COL | HF50ACC 322513-T | T | 79.7/8.8 |
| L924 | 6200003950 | S.COL | HF50ACC 322513-T | T | 75/8.8 |
| L925 | 6200003950 | S.COL | HF50ACC 322513-T | T | 79.7/3.7 |
| L961 | 6200003950 | S.COL | HF50ACC 322513-T | B | 11.5/11.9 |
| L962 | 6200003950 | S.COL | HF50ACC 322513-T | B | 12.6/24 |
| R1 | 7030003560 | S.RES | ERJ3GEYJ 103 V (10 k) | B | 43/22.2 |
| R2 | 7030003560 | S.RES | ERJ3GEYJ 103 V (10 k) | B | 42.2/24.2 |
| R3 | 7030003560 | S.RES | ERJ3GEYJ 103 V (10 k) | B | 43/20.9 |
| R4 | 7030003560 | S.RES | ERJ3GEYJ 103 V (10 k) | B | 42.4/13.7 |
| R5 | 7030003440 | S.RES | ERJ3GEYJ 102 V (1 k) | B | 23.2/5.5 |
| R6 | 7030003440 | S.RES | ERJ3GEYJ 102 V (1 k) | B | 21.9/5.5 |
| R7 | 7030003640 | S.RES | ERJ3GEYJ 473 V (47 k) | B | 20.6/5.5 |
| R8 | 7030003440 | S.RES | ERJ3GEYJ 102 V (1 k) | B | 13.7/8.1 |
| R9 | 7030003640 | S.RES | ERJ3GEYJ 473 V (47 k) | B | 13.7/11.5 |
| R10 | 7030003640 | S.RES | ERJ3GEYJ 473 V (47 k) | T | 43.8/13.1 |
| R11 | 7030003460 | S.RES | ERJ3GEYJ 152 V (1.5 k) | B | 41.8/8.5 |
| R12 | 7030003560 | S.RES | ERJ3GEYJ 103 V (10 k) | B | 26.8/13.8 |
| R151 | 7030003320 | S.RES | ERJ3GEYJ 101 V (100) | T | 44.6/5.3 |
| R152 | 7030003800 | S.RES | ERJ3GEYJ 105 V (1 M) | B | 43.5/6.2 |
| R171 | 7030003320 | S.RES | ERJ3GEYJ 101 V (100) | T | 41.3/1.4 |
| R181 | 7030003560 | S.RES | ERJ3GEYJ 103 V (10 k) | T | 6.4/7 |
| R182 | 7030003560 | S.RES | ERJ3GEYJ 103 V (10 k) | T | 9.2/7 |
| R183 | 7030003560 | S.RES | ERJ3GEYJ 103 V (10 k) | T | 11.8/8.3 |
| R184 | 7030003560 | S.RES | ERJ3GEYJ 103 V (10 k) | T | 11.8/7 |
| R201 | 7030003860 | S.RES | ERJ3GE JPW V | T | 30.8/39.3 |
| R301 | 7030003440 | S.RES | ERJ3GEYJ 102 V (1 k) | T | 79.5/37.7 |
| R302 | 7030009591 | S.RES | ERA3YED 472V (4.7 k) | T | 77.6/46.9 |
| R303 | 7030009591 | S.RES | ERA3YED 472V (4.7 k) | T | 75.7/46.1 |
| R304 | 7030003320 | S.RES | ERJ3GEYJ 101 V (100) | T | 78.1/40.1 |
| R305 | 7030003440 | S.RES | ERJ3GEYJ 102 V (1 k) | T | 75.7/43.5 |
| R306 | 7030003320 | S.RES | ERJ3GEYJ 101 V (100) | T | 68.9/46.1 |
| R341 | 7030003320 | S.RES | ERJ3GEYJ 101 V (100) | T | 76.2/34.6 |
| R342 | 7030003320 | S.RES | ERJ3GEYJ 101 V (100) | T | 68.5/38.4 |
| R343 | 7030005321 | S.RES | ERA3YED 103V (10 k) | T | 64.5/34.6 |
| R344 | 7030009591 | S.RES | ERA3YED 472V (4.7 k) | T | 67/33.9 |
| R345 | 7030009691 | S.RES | ERA3YED 101V (100) | T | 67.7/31.9 |
| R371 | 7030003320 | S.RES | ERJ3GEYJ 101 V (100) | B | 62.9/42.1 |
| R372 | 7030003320 | S.RES | ERJ3GEYJ 101 V (100) | T | 55.3/46.3 |
| R373 | 7030005321 | S.RES | ERA3YED 103V (10 k) | T | 63.7/46.2 |
| R374 | 7030009591 | S.RES | ERA3YED 472V (4.7 k) | T | 54.7/41.8 |
| R375 | 7030009691 | S.RES | ERA3YED 101V (100) | T | 56/40.5 |
| R401 | 7030009591 | S.RES | ERA3YED 472V (4.7 k) | T | 53.1/42.5 |
| R402 | 7030009591 | S.RES | ERA3YED 472V (4.7 k) | T | 51.6/44 |
| R403 | 7030003640 | S.RES | ERJ3GEYJ 473 V (47 k) | T | 54.1/38.7 |
| R404 | 7030003200 | S.RES | ERJ3GEYJ 100 V (10) | T | 50/40 |
| R405 | 7030003320 | S.RES | ERJ3GEYJ 101 V (100) | T | 51.1/38.1 |
| R406 | 7030003640 | S.RES | ERJ3GEYJ 473 V (47 k) | T | 49.8/38.1 |
| R407 | 7030003460 | S.RES | ERJ3GEYJ 152 V (1.5 k) | B | 48/35.4 |
| R409 | 7030003640 | S.RES | ERJ3GEYJ 473 V (47 k) | T | 51.9/23.8 |
| R410 | 7030003640 | S.RES | ERJ3GEYJ 473 V (47 k) | T | 50.6/23.8 |
| R411 | 7030003640 | S.RES | ERJ3GEYJ 473 V (47 k) | T | 49/23.8 |
| R412 | 7030003520 | S.RES | ERJ3GEYJ 472 V (4.7 k) | T | 57.2/22.2 |
| R413 | 7030003520 | S.RES | ERJ3GEYJ 472 V (4.7 k) | T | 57.2/20.9 |
| R414 | 7030003360 | S.RES | ERJ3GEYJ 221 V (220) | T | 46/38.2 |
| R451 | 7030003800 | S.RES | ERJ3GEYJ 105 V (1 M) | T | 40.4/41.1 |
| R452 | 7030003440 | S.RES | ERJ3GEYJ 102 V (1 k) | B | 45.8/35.5 |
| R551 | 7030003360 | S.RES | ERJ3GEYJ 221 V (220) | B | 54/9.3 |
| R601 | 7030006521 | S.RES | ERA3YED 561V (560) | T | 50.2/18.6 |
| R602 | 7030007661 | S.RES | ERA3YED 331V (330) | T | 50.2/19.9 |
| R603 | 7030007661 | S.RES | ERA3YED 331V (330) | T | 48.3/17.1 |
| R604 | 7030009961 | S.RES | ERA3YED 221V (220) | T | 55.4/18.6 |
| R605 | 7030007661 | S.RES | ERA3YED 331V (330) | T | 52.8/18.6 |
| R606 | 7030003320 | S.RES | ERJ3GEYJ 101 V (100) | B | 51.4/24.7 |
| R607 | 7030003320 | S.RES | ERJ3GEYJ 101 V (100) | B | 52.2/13.1 |
| R651 | 7030006521 | S.RES | ERA3YED 561V (560) | T | 62.5/8.4 |
| R652 | 7030007661 | S.RES | ERA3YED 331V (330) | T | 63.5/9.7 |
| R653 | 7030007661 | S.RES | ERA3YED 331V (330) | T | 60.3/8.2 |
| R654 | 7030009961 | S.RES | ERA3YED 221V (220) | T | 67.7/8.4 |
| R655 | 7030007661 | S.RES | ERA3YED 331V (330) | T | 65.1/8.4 |
| R656 | 7030003320 | S.RES | ERJ3GEYJ 101 V (100) | B | 67.2/8.2 |
| R657 | 7030003320 | S.RES | ERJ3GEYJ 101 V (100) | B | 65.1/2.8 |
| R701 | 7030010770 | S.RES | ERA3YED 681V (680) | T | 58/18.2 |
| R702 | 7030009861 | S.RES | ERA3YED 471V (470) | T | 62.1/20 |

## [DSP-TX BOARD]

| REF NO. | ORDER NO. | DESCRIPTION | | M. | H/V LOCATION |
|---|---|---|---|---|---|
| R703 | 7030010770 | S.RES | ERA3YED 681V (680) | T | 70.7/9.3 |
| R704 | 7030009861 | S.RES | ERA3YED 471V (470) | T | 55.6/11.8 |
| R705 | 7030009691 | S.RES | ERA3YED 101V (100) | T | 69/12 |
| R706 | 7030003320 | S.RES | ERJ3GEYJ 101 V (100) | B | 61/23.1 |
| R707 | 7030003320 | S.RES | ERJ3GEYJ 101 V (100) | B | 54.7/14.5 |
| R801 | 7030009591 | S.RES | ERA3YED 472V (4.7 k) | T | 65/22.8 |
| R802 | 7030003320 | S.RES | ERJ3GEYJ 101 V (100) | T | 63.5/22.8 |
| R803 | 7030005321 | S.RES | ERA3YED 103V (10 k) | T | 68.6/21.1 |
| R804 | 7030003320 | S.RES | ERJ3GEYJ 101 V (100) | B | 69.7/31.7 |
| R805 | 7030003320 | S.RES | ERJ3GEYJ 101 V (100) | B | 72.4/21.7 |
| R831 | 7030009591 | S.RES | ERA3YED 472V (4.7 k) | T | 68.4/17.9 |
| R832 | 7030003320 | S.RES | ERJ3GEYJ 101 V (100) | T | 68.6/19.7 |
| R833 | 7030005321 | S.RES | ERA3YED 103V (10 k) | T | 69.7/15.3 |
| R834 | 7030003320 | S.RES | ERJ3GEYJ 101 V (100) | B | 64/23.2 |
| R835 | 7030003320 | S.RES | ERJ3GEYJ 101 V (100) | B | 73.4/13.3 |
| R871 | 7030003520 | S.RES | ERJ3GEYJ 472 V (4.7 k) | T | 77.8/13.7 |
| R872 | 7030003520 | S.RES | ERJ3GEYJ 472 V (4.7 k) | T | 79.1/18.7 |
| R874 | 7030003320 | S.RES | ERJ3GEYJ 101 V (100) | B | 71.3/31.7 |
| R875 | 7030003320 | S.RES | ERJ3GEYJ 101 V (100) | B | 74.4/21.3 |
| R901 | 7030003860 | S.RES | ERJ3GE JPW V | T | 52.7/22 |
| R903 | 7030003860 | S.RES | ERJ3GE JPW V | B | 47.7/38 |
| R904 | 7030003860 | S.RES | ERJ3GE JPW V | T | 47.1/4.2 |
| R905 | 7030003860 | S.RES | ERJ3GE JPW V | B | 48.1/10.2 |
| R962 | 7030003320 | S.RES | ERJ3GEYJ 101 V (100) | T | 12.1/17.5 |
| R963 | 7030003320 | S.RES | ERJ3GEYJ 101 V (100) | T | 11.9/16.2 |
| R964 | 7030003320 | S.RES | ERJ3GEYJ 101 V (100) | T | 11.9/14.9 |
| R967 | 7030003320 | S.RES | ERJ3GEYJ 101 V (100) | T | 13.6/38.7 |
| R968 | 7030003320 | S.RES | ERJ3GEYJ 101 V (100) | T | 11.9/12.3 |
| R969 | 7030003320 | S.RES | ERJ3GEYJ 101 V (100) | T | 13.6/47.8 |
| R970 | 7030003320 | S.RES | ERJ3GEYJ 101 V (100) | T | 13.6/46.5 |
| R971 | 7030003320 | S.RES | ERJ3GEYJ 101 V (100) | T | 13.6/45.2 |
| R972 | 7030003320 | S.RES | ERJ3GEYJ 101 V (100) | T | 13.6/43.9 |
| R973 | 7030003320 | S.RES | ERJ3GEYJ 101 V (100) | T | 13.6/42.6 |
| R974 | 7030003320 | S.RES | ERJ3GEYJ 101 V (100) | T | 13.6/41.3 |
| R975 | 7030003320 | S.RES | ERJ3GEYJ 101 V (100) | T | 13.6/40 |
| R976 | 7030003320 | S.RES | ERJ3GEYJ 101 V (100) | T | 11.9/13.6 |
| C1 | 4030011600 | S.CER | C1608 JB 1E 104K-T | B | 15.2/30.4 |
| C2 | 4030011600 | S.CER | C1608 JB 1E 104K-T | B | 42.2/30.7 |
| C3 | 4030011600 | S.CER | C1608 JB 1E 104K-T | B | 18/32.9 |
| C4 | 4030011600 | S.CER | C1608 JB 1E 104K-T | B | 39.4/32.9 |
| C5 | 4030011600 | S.CER | C1608 JB 1E 104K-T | B | 23.3/25.8 |
| C6 | 4030011600 | S.CER | C1608 JB 1E 104K-T | B | 24.6/25.8 |
| C7 | 4030011600 | S.CER | C1608 JB 1E 104K-T | B | 28.7/25.8 |
| C8 | 4030011600 | S.CER | C1608 JB 1E 104K-T | B | 30/25.8 |
| C9 | 4030011600 | S.CER | C1608 JB 1E 104K-T | B | 33.8/25.8 |
| C10 | 4030011600 | S.CER | C1608 JB 1E 104K-T | B | 22.7/23.8 |
| C11 | 4030011600 | S.CER | C1608 JB 1E 104K-T | B | 35.5/23.2 |
| C12 | 4030011600 | S.CER | C1608 JB 1E 104K-T | T | 12.6/20.7 |
| C13 | 4030011600 | S.CER | C1608 JB 1E 104K-T | B | 22.7/20.2 |
| C14 | 4030011600 | S.CER | C1608 JB 1E 104K-T | B | 35.5/20.6 |
| C15 | 4030011600 | S.CER | C1608 JB 1E 104K-T | B | 22.7/18.9 |
| C16 | 4030011600 | S.CER | C1608 JB 1E 104K-T | B | 34.2/18.4 |
| C17 | 4030011600 | S.CER | C1608 JB 1E 104K-T | T | 43.5/20 |
| C18 | 4030011600 | S.CER | C1608 JB 1E 104K-T | B | 22.7/15.7 |
| C19 | 4030011600 | S.CER | C1608 JB 1E 104K-T | B | 34.2/14.9 |
| C20 | 4030011600 | S.CER | C1608 JB 1E 104K-T | B | 23.3/13.8 |
| C21 | 4030011600 | S.CER | C1608 JB 1E 104K-T | B | 24.6/13.8 |
| C22 | 4030011600 | S.CER | C1608 JB 1E 104K-T | B | 28.1/13.8 |
| C23 | 4030011600 | S.CER | C1608 JB 1E 104K-T | B | 32.6/13.1 |
| C24 | 4030011600 | S.CER | C1608 JB 1E 104K-T | B | 35.2/13.1 |
| C25 | 4030011600 | S.CER | C1608 JB 1E 104K-T | B | 17.3/6.7 |
| C26 | 4030011600 | S.CER | C1608 JB 1E 104K-T | B | 33.1/6.3 |
| C27 | 4030011600 | S.CER | C1608 JB 1E 104K-T | B | 42.4/11.1 |
| C28 | 4030011600 | S.CER | C1608 JB 1E 104K-T | B | 15/8.1 |
| C29 | 4030011600 | S.CER | C1608 JB 1E 104K-T | B | 40.9/6.6 |
| C30 | 4030011600 | S.CER | C1608 JB 1E 104K-T | T | 35.2/5 |
| C31 | 4030011600 | S.CER | C1608 JB 1E 104K-T | T | 28.5/5.2 |
| C32 | 4030011600 | S.CER | C1608 JB 1E 104K-T | T | 37.8/5 |
| C33 | 4030011600 | S.CER | C1608 JB 1E 104K-T | T | 18.6/35.5 |
| C34 | 4030011600 | S.CER | C1608 JB 1E 104K-T | T | 37.5/35.5 |
| C35 | 4030011600 | S.CER | C1608 JB 1E 104K-T | B | 26/32.9 |
| C36 | 4030011600 | S.CER | C1608 JB 1E 104K-T | B | 29.3/32.9 |
| C37 | 4030011600 | S.CER | C1608 JB 1E 104K-T | B | 36.8/32.9 |
| C38 | 4030011600 | S.CER | C1608 JB 1E 104K-T | B | 15.2/27.7 |
| C39 | 4030011600 | S.CER | C1608 JB 1E 104K-T | B | 22.4/32.9 |
| C40 | 4030011600 | S.CER | C1608 JB 1E 104K-T | B | 26.1/25.8 |
| C41 | 4030011600 | S.CER | C1608 JB 1E 104K-T | B | 22/25.8 |
| C42 | 4030011600 | S.CER | C1608 JB 1E 104K-T | B | 27.4/25.8 |
| C43 | 4030011600 | S.CER | C1608 JB 1E 104K-T | B | 32.5/25.8 |
| C44 | 4030011600 | S.CER | C1608 JB 1E 104K-T | B | 35.1/25.8 |
| C45 | 4030011600 | S.CER | C1608 JB 1E 104K-T | B | 42.2/26.8 |
| C46 | 4030011600 | S.CER | C1608 JB 1E 104K-T | B | 15.3/24.9 |
| C47 | 4030011600 | S.CER | C1608 JB 1E 104K-T | T | 43.5/29 |
| C48 | 4030011600 | S.CER | C1608 JB 1E 104K-T | B | 22.7/21.5 |
| C49 | 4030011600 | S.CER | C1608 JB 1E 104K-T | B | 42.4/17.9 |
| C50 | 4030011600 | S.CER | C1608 JB 1E 104K-T | B | 22.7/17.6 |
| C51 | 4030011600 | S.CER | C1608 JB 1E 104K-T | B | 35.5/17.5 |
| C52 | 4030011600 | S.CER | C1608 JB 1E 104K-T | B | 15/11.5 |
| C53 | 4030011600 | S.CER | C1608 JB 1E 104K-T | B | 22/13.8 |
| C54 | 4030011600 | S.CER | C1608 JB 1E 104K-T | T | 43.3/9.9 |
| C55 | 4030011600 | S.CER | C1608 JB 1E 104K-T | B | 29.4/13.8 |
| C56 | 4030011600 | S.CER | C1608 JB 1E 104K-T | B | 25.1/6.6 |
| C57 | 4030011600 | S.CER | C1608 JB 1E 104K-T | B | 29.8/6.2 |
| C58 | 4030011600 | S.CER | C1608 JB 1E 104K-T | B | 38.3/6.6 |
| C59 | 4030011600 | S.CER | C1608 JB 1E 104K-T | T | 20.3/5.3 |
| C60 | 4510007130 | S.ELE | EEFCD 0J 470R | T | 25.4/41.7 |
| C61 | 4550007480 | S.TAN | F930J106MAABMA | B | 45.2/29.7 |
| C62 | 4510007130 | S.ELE | EEFCD 0J 470R | T | 19.5/41.7 |
| C101 | 4030011600 | S.CER | C1608 JB 1E 104K-T | B | 35.7/6.5 |
| C102 | 4550007480 | S.TAN | F930J106MAABMA | B | 30.6/2.6 |
| C151 | 4030011600 | S.CER | C1608 JB 1E 104K-T | B | 45.5/10.2 |
| C152 | 4030007030 | S.CER | C1608 CH 1H 150J-T | B | 46.1/6.2 |
| C153 | 4030007030 | S.CER | C1608 CH 1H 150J-T | B | 43.1/8 |

M.=Mounted side (T: Mounted on the Top side, B: Mounted on the Bottom side)
S.=Surface mount

## [DSP-TX BOARD]

| REF NO. | ORDER NO. | DESCRIPTION | M. | H/V LOCATION |
|---|---|---|---|---|
| C171 | 4030011600 | S.CER C1608 JB 1E 104K-T | T | 41.3/2.7 |
| C181 | 4030011600 | S.CER C1608 JB 1E 104K-T | T | 31/4.3 |
| C191 | 4030011600 | S.CER C1608 JB 1E 104K-T | T | 22.6/1.2 |
| C201 | 4030011600 | S.CER C1608 JB 1E 104K-T | B | 42.3/44.3 |
| C301 | 4550007660 | S.TAN F931E105MAABMA | B | 80.4/44.1 |
| C302 | 4550007500 | S.TAN F931D106MBABMA | B | 75.6/44.1 |
| C303 | 4030011600 | S.CER C1608 JB 1E 104K-T | T | 75.7/40.7 |
| C304 | 4550007500 | S.TAN F931D106MBABMA | B | 71.5/44.1 |
| C305 | 4030011600 | S.CER C1608 JB 1E 104K-T | T | 67.6/46.1 |
| C306 | 4030007050 | S.CER C1608 CH 1H 220J-T | T | 72.3/39.8 |
| C341 | 4550007500 | S.TAN F931D106MBABMA | B | 74/34.6 |
| C342 | 4030011600 | S.CER C1608 JB 1E 104K-T | T | 75.5/32.8 |
| C343 | 4550007500 | S.TAN F931D106MBABMA | B | 66.9/36.8 |
| C344 | 4030011600 | S.CER C1608 JB 1E 104K-T | T | 67.2/38.4 |
| C345 | 4550007660 | S.TAN F931E105MAABMA | B | 76.8/38.7 |
| C346 | 4030007140 | S.CER C1608 CH 1H 121J-T | T | 68.5/33.9 |
| C347 | 4030011600 | S.CER C1608 JB 1E 104K-T | T | 67.7/35.9 |
| C348 | 4030007050 | S.CER C1608 CH 1H 220J-T | T | 72/30.6 |
| C371 | 4550007500 | S.TAN F931D106MBABMA | B | 59.8/43.8 |
| C372 | 4030011600 | S.CER C1608 JB 1E 104K-T | T | 63.7/42.9 |
| C373 | 4550007500 | S.TAN F931D106MBABMA | B | 50.1/43.9 |
| C374 | 4030011600 | S.CER C1608 JB 1E 104K-T | T | 53.4/45.5 |
| C375 | 4550007660 | S.TAN F931E105MAABMA | B | 66/43.7 |
| C376 | 4030007140 | S.CER C1608 CH 1H 121J-T | T | 56/43.1 |
| C377 | 4030011600 | S.CER C1608 JB 1E 104K-T | T | 55.3/45 |
| C378 | 4030007050 | S.CER C1608 CH 1H 220J-T | T | 59.4/39.8 |
| C401 | 4550007480 | S.TAN F930J106MAABMA | B | 54.9/43.8 |
| C402 | 4030017840 | S.CER C2012 CH 1H 222J-T | T | 58.1/37.6 |
| C403 | 4550007480 | S.TAN F930J106MAABMA | B | 63.1/35.2 |
| C404 | 4030011810 | S.CER C1608 JB 1A 224K-T | T | 61.5/37.4 |
| C405 | 4550007480 | S.TAN F930J106MAABMA | B | 58.3/36 |
| C406 | 4030011810 | S.CER C1608 JB 1A 224K-T | T | 64.5/32 |
| C407 | 4550007480 | S.TAN F930J106MAABMA | B | 51.1/36.1 |
| C408 | 4030011600 | S.CER C1608 JB 1E 104K-T | T | 54.1/37.4 |
| C410 | 4030009000 | S.CER C2012 JB 1C 224K-T | T | 61/24 |
| C411 | 4550007480 | S.TAN F930J106MAABMA | B | 62.5/28.3 |
| C412 | 4550007480 | S.TAN F930J106MAABMA | B | 58.3/29.9 |
| C413 | 4030009000 | S.CER C2012 JB 1C 224K-T | T | 64.7/28.6 |
| C414 | 4030011600 | S.CER C1608 JB 1E 104K-T | T | 54.2/24.5 |
| C415 | 4550007520 | S.TAN F931A106MAABMA | B | 52.6/29.2 |
| C416 | 4550007480 | S.TAN F930J106MAABMA | B | 56.1/24.4 |
| C417 | 4030017840 | S.CER C2012 CH 1H 222J-T | T | 57.4/24 |
| C450 | 4030011600 | S.CER C1608 JB 1E 104K-T | T | 44.2/39.7 |
| C451 | 4030011600 | S.CER C1608 JB 1E 104K-T | T | 42.9/37.8 |
| C452 | 4030006860 | S.CER C1608 JB 1H 102K-T | T | 42.9/41.9 |
| C453 | 4030007050 | S.CER C1608 CH 1H 220J | B | 45.8/36.8 |
| C551 | 4030011600 | S.CER C1608 JB 1E 104K-T | T | 48/1.7 |
| C552 | 4550007520 | S.TAN F931A106MAABMA | B | 49.8/3.3 |
| C553 | 4550007520 | S.TAN F931A106MAABMA | B | 57.2/8.9 |
| C554 | 4550007520 | S.TAN F931A106MAABMA | B | 55/3.3 |
| C555 | 4030011600 | S.CER C1608 JB 1E 104K-T | T | 58.6/2.5 |
| C556 | 4030011600 | S.CER C1608 JB 1E 104K-T | T | 58.6/5.8 |
| C557 | 4030011600 | S.CER C1608 JB 1E 104K-T | B | 57.7/4.1 |
| C601 | 4550007660 | S.TAN F931E105MAABMA | B | 50.5/9.4 |
| C602 | 4030018510 | S.CER C2012 CH 1H 682J-T | T | 48.3/14.2 |
| C603 | 4550007500 | S.TAN F931D106MBABMA | B | 50.4/15.8 |
| C604 | 4030011600 | S.CER C1608 JB 1E 104K-T | T | 49.6/11.8 |
| C605 | 4030011600 | S.CER C1608 JB 1E 104K-T | T | 52.7/11.8 |
| C606 | 4550007500 | S.TAN F931D106MBABMA | B | 51/20.8 |
| C607 | 4030018510 | S.CER C2012 CH 1H 682J-T | T | 53.2/20.1 |
| C608 | 4030007050 | S.CER C1608 CH 1H 220J-T | T | 57.6/14.5 |
| C651 | 4550007660 | S.TAN F931E105MAABMA | B | 60/8.9 |
| C652 | 4030018510 | S.CER C2012 CH 1H 682J-T | T | 60.1/5.3 |
| C653 | 4550007500 | S.TAN F931D106MBABMA | B | 62.5/3.3 |
| C654 | 4030011600 | S.CER C1608 JB 1E 104K-T | T | 62.5/1.6 |
| C655 | 4030011600 | S.CER C1608 JB 1E 104K-T | T | 69.8/1.6 |
| C656 | 4550007500 | S.TAN F931D106MBABMA | B | 63.6/9.2 |
| C657 | 4030018510 | S.CER C2012 CH 1H 682J-T | T | 66.4/10 |
| C658 | 4030007050 | S.CER C1608 CH 1H 220J-T | T | 69.9/4.4 |
| C701 | 4030017840 | S.CER C2012 CH 1H 222J-T | T | 62.1/18.5 |
| C702 | 4030017840 | S.CER C2012 CH 1H 222J-T | T | 59.2/11.1 |
| C703 | 4550007500 | S.TAN F931D106MBABMA | B | 58.7/15.3 |
| C704 | 4030011600 | S.CER C1608 JB 1E 104K-T | T | 62.4/11.3 |
| C705 | 4030011600 | S.CER C1608 JB 1E 104K-T | T | 65.5/18.2 |
| C706 | 4550007500 | S.TAN F931D106MBABMA | B | 57.7/19.3 |
| C707 | 4030007050 | S.CER C1608 CH 1H 220J-T | T | 67.8/14.1 |
| C801 | 4030006860 | S.CER C1608 JB 1H 102K-T | T | 64.2/24.6 |
| C802 | 4030011600 | S.CER C1608 JB 1E 104K-T | T | 73.3/25 |
| C803 | 4550007480 | S.TAN F930J106MAABMA | B | 76.7/16.6 |
| C804 | 4030011600 | S.CER C1608 JB 1E 104K-T | T | 72/27.9 |
| C805 | 4550007520 | S.TAN F931A106MAABMA | B | 67.2/28.6 |
| C806 | 4030011600 | S.CER C1608 JB 1E 104K-T | T | 72.5/23.1 |
| C807 | 4550007500 | S.TAN F931D106MBABMA | B | 68.4/23.6 |
| C808 | 4030007050 | S.CER C1608 CH 1H 220J-T | T | 69/30.4 |
| C831 | 4030006860 | S.CER C1608 JB 1H 102K-T | T | 69.7/17.9 |
| C832 | 4030011600 | S.CER C1608 JB 1E 104K-T | T | 76.5/16.3 |
| C833 | 4550007480 | S.TAN F930J106MAABMA | B | 69.7/16.8 |
| C834 | 4030011600 | S.CER C1608 JB 1E 104K-T | T | 77.8/17.2 |
| C835 | 4550007520 | S.TAN F931A106MAABMA | B | 64/19.7 |
| C836 | 4030011600 | S.CER C1608 JB 1E 104K-T | T | 76.5/13.7 |
| C837 | 4550007500 | S.TAN F931D106MBABMA | B | 64.7/15.3 |
| C838 | 4030007050 | S.CER C1608 CH 1H 220J-T | T | 73.6/20.5 |
| C871 | 4550007520 | S.TAN F931A106MAABMA | B | 75.5/29.4 |
| C872 | 4030011600 | S.CER C1608 JB 1E 104K-T | T | 73.5/27.9 |
| C873 | 4550007500 | S.TAN F931D106MBABMA | B | 75.6/24.3 |
| C874 | 4030011600 | S.CER C1608 JB 1E 104K-T | T | 78.2/21.5 |
| C875 | 4030007050 | S.CER C1608 CH 1H 220J-T | T | 77.2/30.9 |
| C921 | 4550007510 | S.TAN F931C106MBABMA | B | 69.3/3.8 |
| C922 | 4030011600 | S.CER C1608 JB 1E 104K-T | T | 72.8/3.5 |
| C923 | 4550002830 | S.TAN TEESVD2 1V 685M12R | B | 75.4/6 |
| C924 | 4030011600 | S.CER C1608 JB 1E 104K-T | T | 81.8/8 |
| C925 | 4550007510 | S.TAN F931C106MBABMA | B | 71.1/9.3 |
| C926 | 4030011600 | S.CER C1608 JB 1E 104K-T | T | 72.8/9 |
| C927 | 4550002830 | S.TAN TEESVD2 1V 685M12R | B | 80.7/6 |

## [DSP-TX BOARD]

| REF NO. | ORDER NO. | DESCRIPTION | M. | H/V LOCATION |
|---|---|---|---|---|
| C928 | 4030011600 | S.CER C1608 JB 1E 104K-T | T | 81.8/4.6 |
| C961 | 4030011600 | S.CER C1608 JB 1E 104K-T | B | 11.4/14.9 |
| C962 | 4550007520 | S.TAN F931A106MAABMA | B | 12.2/18.6 |
| C963 | 4030011600 | S.CER C1608 JB 1E 104K-T | B | 10.4/24.8 |
| C964 | 4550007520 | S.TAN F931A106MAABMA | B | 11.4/28.9 |
| J921 | 6910013900 | CNR IMSA-9180S-22A | | |
| J961 | 6910012460 | CNR IMSA-9180S-30A | | |

M.=Mounted side (T: Mounted on the Top side, B: Mounted on the Bottom side)
S.=Surface mount

## [SCOPE UNIT]

| REF NO. | ORDER NO. | DESCRIPTION | | M. | H/V LOCATION |
|---|---|---|---|---|---|
| IC1 | 1110006180 | S.IC | UPG2009TB-E3 | T | 85.1/9.6 |
| IC2 | 1180001771 | S.IC | TA79L05F (TE12L,F) | T | 24.5/95.6 |
| IC31 | 1110006180 | S.IC | UPG2009TB-E3 | T | 86.5/14.1 |
| IC201 | 1180002650 | S.REG | SI-3012KS-TL | T | 116.4/64.6 |
| IC401 | 1110006131 | S.IC | uPC4094G2-E1-A | T | 15.6/88.6 |
| IC403 | 1110006131 | S.IC | uPC4094G2-E1-A | T | 26.9/88.6 |
| IC404 | 1110006131 | S.IC | uPC4094G2-E1-A | T | 44/87.6 |
| IC405 | 1110002700 | S.IC | NJM2904M-TE1-#FMZB | T | 39.2/70.4 |
| IC501 | 1190002031 | S.IC | AD7650ASTZ | T | 55.5/79.2 |
| IC502 | 1130006891 | S.IC | TC7S04FU (TE85R,F) | T | 57.7/88 |
| IC505 | 1180002631 | S.REG | AD1582BRTZ-REEL7 | T | 55.4/94.6 |
| IC601 | 1140012221 | S.IC | TMS320C6711DZDP200 | T | 88.4/81.4 |
| IC602 | 1130011930 | S.IC | SN74LVC1G04DCKR | T | 68.2/67.4 |
| IC603 | 1130011930 | S.IC | SN74LVC1G04DCKR | T | 70.7/70.3 |
| IC604 | 1130008041 | S.IC | TC7SH04FU (TE85L,JF) | B | 67.4/74.6 |
| IC607 | 1110006411 | S.IC | R3111N111A-TR-F | B | 104.1/81.1 |
| IC671 | 1130012394 | S.IC | AT49BV001AN-55TU | T | 112.8/82.9 |
| IC801 | 1130009230 | S.IC | LMX2306TMX/NOPB | T | 65.6/36.5 |
| IC803 | 1130009691 | S.IC | TC74HCT7007AF (F) | B | 68/29 |
| IC820 | 1190001961 | S.IC | AD9857ASTZ | T | 93.7/35.6 |
| IC903 | 1120002921 | S.IC | ADM202EARNZ | T | 96.9/109.1 |
| IC904 | 1130005721 | S.IC | TC7W04F (TE12L,F) | T | 107.5/113 |
| IC905 | 1130005252 | S.IC | TC74HC08AF (EL,F) | B | 97/109.6 |
| IC906 | 1130009831 | S.IC | TC74VHCT04AF (F) | B | 108.4/109.6 |
| | | | | | |
| Q1 | 1530002060 | S.TR | 2SC4081 T106 R | T | 67.4/6.3 |
| Q2 | 1530003851 | S.TR | 2SC5551F-TD-E | T | 45.7/7.4 |
| Q11 | 1590000680 | S.TR | DTC114EUA T106 | T | 78.2/7.4 |
| Q12 | 1590000680 | S.TR | DTC114EUA T106 | T | 92.1/6.5 |
| Q31 | 1590000680 | S.TR | DTC114EUA T106 | T | 78.4/3.5 |
| Q32 | 1590000680 | S.TR | DTC114EUA T106 | T | 92.7/3.5 |
| Q33 | 1590000680 | S.TR | DTC114EUA T106 | T | 93/15.3 |
| Q101 | 1530003151 | S.TR | 2SC4673D-TD-E | T | 28.8/18.2 |
| Q201 | 1560000561 | S.FET | 2SK882-GR (TE85L,F) | T | 11.4/40.4 |
| Q202 | 1560000561 | S.FET | 2SK882-GR (TE85L,F) | T | 10.1/45.2 |
| Q301 | 1530003151 | S.TR | 2SC4673D-TD-E | T | 21.4/67.9 |
| Q701 | 1530003221 | S.TR | 2SC4406-4-TL-E | T | 75.3/54.2 |
| Q720 | 1530003221 | S.TR | 2SC4406-4-TL-E | T | 101.9/45.5 |
| Q810 | 1530003221 | S.TR | 2SC4406-4-TL-E | T | 73.1/37.7 |
| Q821 | 1560000331 | S.FET | 2SK210-GR (TE85R,F) | T | 43.3/45.7 |
| Q841 | 1530002060 | S.TR | 2SC4081 T106 R | T | 41.5/37.2 |
| Q842 | 1530003431 | S.TR | 2SC5226-4-TL-E | T | 27.4/31.6 |
| Q843 | 1530003431 | S.TR | 2SC5226-4-TL-E | T | 25/39.9 |
| Q872 | 1590000680 | S.TR | DTC114EUA T106 | T | 30.2/32.6 |
| Q903 | 1530002280 | S.TR | 2SC4081 T106 S | B | 130.2/111.8 |
| Q904 | 1510000510 | S.TR | 2SA1576A T106R | B | 126.1/105.7 |
| Q921 | 1590001330 | S.TR | DTA114EUA T106 | T | 54.5/112.7 |
| Q922 | 1590000680 | S.TR | DTC114EUA T106 | T | 50.7/112.7 |
| Q923 | 1590001330 | S.TR | DTA114EUA T106 | T | 42.9/113.5 |
| Q924 | 1590000680 | S.TR | DTC114EUA T106 | T | 40.3/113.5 |
| | | | | | |
| D1 | 1750000971 | S.DIO | CPH5513-TL-E | T | 79.7/14.9 |
| D2 | 1750000971 | S.DIO | CPH5513-TL-E | T | 72.5/15.9 |
| D3 | 1750000441 | S.DIO | 1SV263-TL-E | T | 72.1/12.8 |
| D4 | 1750000431 | S.DIO | HSB88WSTR-E | T | 10.3/68.3 |
| D11 | 1790000620 | S.DIO | MA77 (TX) | T | 83.2/4.5 |
| D12 | 1790000620 | S.DIO | MA77 (TX) | T | 87.2/4.5 |
| D101 | 1750000431 | S.DIO | HSB88WSTR-E | T | 25.7/8.2 |
| D201 | 1710000840 | S.DIO | 1SR154-400 TE25 | B | 120.3/65 |
| D401 | 1790001250 | S.DIO | MA2S111-(TX) | T | 41.2/77.1 |
| D402 | 1790001250 | S.DIO | MA2S111-(TX) | T | 39.9/75.2 |
| D403 | 1790001250 | S.DIO | MA2S111-(TX) | T | 33.4/69.5 |
| D821 | 1750000681 | S.VCP | 1SV232 (TPH2,F) | T | 57.9/43.2 |
| D822 | 1750000681 | S.VCP | 1SV232 (TPH2,F) | T | 57.9/44.9 |
| D902 | 1750000550 | S.DIO | 1SS355 TE-17 | B | 129.7/109.5 |
| | | | | | |
| FI201 | 2030000290 | S.MLH | FL-357 (45 MHz) | T | 9.3/29.6 |
| FI501 | 2040000790 | S.LC | EXCCET103U | T | 71.2/76 |
| | | | | | |
| L1 | 6200001831 | S.COL | NLV32T-100J | T | 76.3/12.8 |
| L2 | 6200001831 | S.COL | NLV32T-100J | T | 75.1/19.1 |
| L3 | 6200001831 | S.COL | NLV32T-100J | B | 70.7/15.1 |
| L4 | 6200001831 | S.COL | NLV32T-100J | T | 67.3/12.1 |
| L5 | 6150004280 | COL | LS-484B (C-14927) | | |
| L6 | 6150004280 | COL | LS-484B (C-14927) | | |
| L7 | 6200003261 | S.COL | NLV32T-101J | T | 52/16.6 |
| L8 | 6140003790 | COL | LR-442 | | |
| L9 | 6200001831 | S.COL | NLV32T-100J | T | 41.2/7.5 |
| L10 | 6200001831 | S.COL | NLV32T-100J | T | 41.2/3.2 |
| L11 | 6200001831 | S.COL | NLV32T-100J | T | 57.3/3.5 |
| L12 | 6200010450 | S.COL | C2520C-R82G-A (0.82U) | T | 57.6/15.5 |
| L13 | 6200010940 | S.COL | C2520C-39NG-A | T | 68.3/20 |
| L14 | 6200010860 | S.COL | C2520C-R10G-A (0.1U) | T | 64.1/19.2 |
| L31 | 6200001831 | S.COL | NLV32T-100J | B | 82.6/1.8 |
| L32 | 6200001831 | S.COL | NLV32T-100J | B | 78.8/5.2 |
| L33 | 6200001831 | S.COL | NLV32T-100J | B | 86.6/6 |
| L34 | 6200001831 | S.COL | NLV32T-100J | B | 90.7/3.6 |
| L51 | 6200001831 | S.COL | NLV32T-100J | B | 120.5/26 |
| L52 | 6200001831 | S.COL | NLV32T-100J | B | 126.5/39.4 |
| L53 | 6200001831 | S.COL | NLV32T-100J | T | 47.7/64.3 |
| L54 | 6200001831 | S.COL | NLV32T-100J | T | 50.7/64.3 |
| L55 | 6200003950 | S.COL | HF50ACC 322513-T | B | 119.3/33.5 |
| L56 | 6200003950 | S.COL | HF50ACC 322513-T | T | 116.1/44.6 |
| L57 | 6200003950 | S.COL | HF50ACC 322513-T | T | 121.2/27.1 |
| L58 | 6200003950 | S.COL | HF50ACC 322513-T | B | 119.3/39.1 |
| L59 | 6200003950 | S.COL | HF50ACC 322513-T | T | 119.6/34.4 |
| L60 | 6200003950 | S.COL | HF50ACC 322513-T | T | 119.6/37.6 |
| L101 | 6140003530 | COL | LR-395 | | |
| L102 | 6140003530 | COL | LR-395 | | |
| L103 | 6200003021 | S.COL | NLV32T-R33J | T | 22.3/19.7 |

## [SCOPE UNIT]

| REF NO. | ORDER NO. | DESCRIPTION | | M. | H/V LOCATION |
|---|---|---|---|---|---|
| L104 | 6200001920 | S.COL | ELJNC R15K-F | B | 22.7/16.4 |
| L201 | 6150004250 | COL | LS-471A (C-14922) | | |
| L202 | 6150004280 | COL | LS-484B (C-14927) | | |
| L203 | 6150004280 | COL | LS-484B (C-14927) | | |
| L204 | 6200001831 | S.COL | NLV32T-100J | B | 3.3/46.6 |
| L205 | 6200002431 | S.COL | NLV25T-082J | B | 10.4/17.6 |
| L301 | 6140003530 | COL | LR-395 | | |
| L302 | 6140003530 | COL | LR-395 | | |
| L303 | 6200003041 | S.COL | NLV32T-R68J | T | 21/74.1 |
| L304 | 6200001831 | S.COL | NLV32T-100J | B | 23.2/72.6 |
| L401 | 6200003171 | S.COL | NLV32T-330J | T | 10.4/83.2 |
| L501 | 6200001831 | S.COL | NLV32T-100J | T | 53.8/64.3 |
| L502 | 6200001831 | S.COL | NLV32T-100J | B | 57.6/69.6 |
| L551 | 6180003501 | S.COL | SLF6028T-100M1R3-PF | T | 105.8/64.4 |
| L552 | 6200001831 | S.COL | NLV32T-100J | T | 106.3/69.9 |
| L671 | 6200001831 | S.COL | NLV32T-100J | T | 110.9/69.9 |
| L701 | 6200005491 | S.COL | NLV32T-331J | T | 76/51.4 |
| L720 | 6200001831 | S.COL | NLV32T-100J | T | 82/34.6 |
| L721 | 6200001831 | S.COL | NLV32T-100J | T | 109.4/41 |
| L722 | 6200001831 | S.COL | NLV32T-100J | T | 110.8/45.2 |
| L761 | 6200003011 | S.COL | NLV32T-R27J | T | 106.3/22.3 |
| L762 | 6200003021 | S.COL | NLV32T-R33J | T | 102.7/23 |
| L763 | 6200003251 | S.COL | NLV32T-R39J | T | 97.9/22.4 |
| L764 | 6200003251 | S.COL | NLV32T-R39J | T | 93.6/23.4 |
| L801 | 6200005491 | S.COL | NLV32T-331J | T | 69.7/40.9 |
| L802 | 6200005491 | S.COL | NLV32T-331J | T | 70.3/26.7 |
| L821 | 6200001831 | S.COL | NLV32T-100J | T | 61.7/45.7 |
| L822 | 6190001441 | COL | #E526GN-110504 | | |
| L823 | 6200001851 | S.COL | NLV32T-5R6J | T | 40.7/42.2 |
| L825 | 6200003261 | S.COL | NLV32T-101J | T | 51.7/52.2 |
| L841 | 6200003261 | S.COL | NLV32T-101J | | B26.8/33 |
| L842 | 6200003031 | S.COL | NLV32T-R47J | T | 26.8/34.5 |
| L851 | 6200003431 | S.COL | NLV32T-R10J | T | 27.4/45 |
| L852 | 6200001471 | S.COL | NLV32T-R12J | T | 27/48.9 |
| L902 | 6200003241 | S.COL | NLV32T-221J | T | 128.1/107.7 |
| | | | | | |
| R1 | 7030003360 | S.RES | ERJ3GEYJ 221 V (220) | T | 79.6/12.5 |
| R2 | 7030003480 | S.RES | ERJ3GEYJ 222 V (2.2 k) | T | 70.7/10.8 |
| R3 | 7030003440 | S.RES | ERJ3GEYJ 102 V (1 k) | T | 70.7/9.5 |
| R4 | 7030003460 | S.RES | ERJ3GEYJ 152 V (1.5 k) | T | 67.8/8.2 |
| R5 | 7030003520 | S.RES | ERJ3GEYJ 472 V (4.7 k) | T | 66.6/4.4 |
| R6 | 7030003440 | S.RES | ERJ3GEYJ 102 V (1 k) | T | 69.4/5 |
| R7 | 7030003290 | S.RES | ERJ3GEYJ 560 V (56) | T | 49.8/17.3 |
| R8 | 7030003440 | S.RES | ERJ3GEYJ 102 V (1 k) | T | 48.4/3.5 |
| R9 | 7030003500 | S.RES | ERJ3GEYJ 332 V (3.3 k) | T | 46/4.2 |
| R11 | 7310005550 | S.TRI | TMC3ADCJ4X 22K | T | 61.7/3.8 |
| R12 | 7030003320 | S.RES | ERJ3GEYJ 101 V (100) | T | 46.7/10.6 |
| R14 | 7030003340 | S.RES | ERJ3GEYJ 151 V (150) | T | 82.3/2.4 |
| R16 | 7030003440 | S.RES | ERJ3GEYJ 102 V (1 k) | T | 80.2/6.7 |
| R17 | 7030003440 | S.RES | ERJ3GEYJ 102 V (1 k) | T | 81.5/6.7 |
| R18 | 7030003340 | S.RES | ERJ3GEYJ 151 V (150) | T | 87.4/2.4 |
| R20 | 7030003440 | S.RES | ERJ3GEYJ 102 V (1 k) | T | 90.2/6.7 |
| R21 | 7030003440 | S.RES | ERJ3GEYJ 102 V (1 k) | T | 88.9/6.7 |
| R34 | 7030003440 | S.RES | ERJ3GEYJ 102 V (1 k) | T | 78.4/5.5 |
| R35 | 7030003440 | S.RES | ERJ3GEYJ 102 V (1 k) | T | 89.4/3.5 |
| R36 | 7030003520 | S.RES | ERJ3GEYJ 472 V (4.7 k) | T | 91/14.7 |
| R37 | 7030003500 | S.RES | ERJ3GEYJ 332 V (3.3 k) | T | 89.7/14.7 |
| R38 | 7030003520 | S.RES | ERJ3GEYJ 472 V (4.7 k) | T | 82/13.9 |
| R39 | 7030003500 | S.RES | ERJ3GEYJ 332 V (3.3 k) | T | 83.3/13.9 |
| R51 | 7030003520 | S.RES | ERJ3GEYJ 472 V (4.7 k) | T | 80.6/9.8 |
| R52 | 7030003520 | S.RES | ERJ3GEYJ 472 V (4.7 k) | T | 90.3/9.9 |
| R53 | 7030003320 | S.RES | ERJ3GEYJ 101 V (100) | B | 126/32.3 |
| R54 | 7030003500 | S.RES | ERJ3GEYJ 332 V (3.3 k) | T | 81.9/9.8 |
| R55 | 7030003500 | S.RES | ERJ3GEYJ 332 V (3.3 k) | T | 88.4/9.8 |
| R61 | 7030003320 | S.RES | ERJ3GEYJ 101 V (100) | B | 128.7/49 |
| R62 | 7030003320 | S.RES | ERJ3GEYJ 101 V (100) | T | 122.3/50.4 |
| R63 | 7030003320 | S.RES | ERJ3GEYJ 101 V (100) | B | 128.7/51 |
| R64 | 7030003320 | S.RES | ERJ3GEYJ 101 V (100) | T | 122.3/53.3 |
| R65 | 7030003320 | S.RES | ERJ3GEYJ 101 V (100) | B | 128.7/53 |
| R66 | 7030003320 | S.RES | ERJ3GEYJ 101 V (100) | T | 123.6/56.7 |
| R71 | 7030003320 | S.RES | ERJ3GEYJ 101 V (100) | B | 128.7/55 |
| R72 | 7030003320 | S.RES | ERJ3GEYJ 101 V (100) | T | 121.7/47.4 |
| R73 | 7030003320 | S.RES | ERJ3GEYJ 101 V (100) | T | 121.7/43.3 |
| R74 | 7030003320 | S.RES | ERJ3GEYJ 101 V (100) | B | 128.7/43.4 |
| R75 | 7030003320 | S.RES | ERJ3GEYJ 101 V (100) | T | 121.7/44.7 |
| R76 | 7030003320 | S.RES | ERJ3GEYJ 101 V (100) | B | 128.7/45.4 |
| R77 | 7030003320 | S.RES | ERJ3GEYJ 101 V (100) | T | 121.7/46 |
| R81 | 7030010520 | S.RES | ERJ1TYJ 101U (100) | B | 122.9/46.2 |
| R103 | 7030003480 | S.RES | ERJ3GEYJ 222 V (2.2 k) | T | 33.8/18 |
| R104 | 7030003320 | S.RES | ERJ3GEYJ 101 V (100) | T | 25.9/21.9 |
| R105 | 7030003370 | S.RES | ERJ3GEYJ 271 V (270) | B | 18.3/14.3 |
| R106 | 7030003230 | S.RES | ERJ3GEYJ 180 V (18) | B | 19.1/11.9 |
| R107 | 7030003370 | S.RES | ERJ3GEYJ 271 V (270) | B | 18.3/8.4 |
| R108 | 7030003370 | S.RES | ERJ3GEYJ 271 V (270) | B | 14.6/8.4 |
| R109 | 7030003230 | S.RES | ERJ3GEYJ 180 V (18) | B | 11.2/9.7 |
| R110 | 7030003370 | S.RES | ERJ3GEYJ 271 V (270) | B | 11.2/12 |
| R111 | 7030003550 | S.RES | ERJ3GEYJ 822 V (8.2 k) | T | 29.8/14.9 |
| R112 | 7030003320 | S.RES | ERJ3GEYJ 101 V (100) | T | 33.8/19.3 |
| R113 | 7030003860 | S.RES | ERJ3GE JPW V | B | 19.5/18 |
| R201 | 7030003430 | S.RES | ERJ3GEYJ 821 V (820) | T | 11.3/37.1 |
| R202 | 7030003430 | S.RES | ERJ3GEYJ 821 V (820) | T | 11.3/35.8 |
| R203 | 7030003280 | S.RES | ERJ3GEYJ 470 V (47) | B | 3.1/39.8 |
| R204 | 7030003560 | S.RES | ERJ3GEYJ 103 V (10 k) | T | 12/45 |
| R205 | 7030003280 | S.RES | ERJ3GEYJ 470 V (47) | B | 6.3/46.6 |
| R206 | 7030003380 | S.RES | ERJ3GEYJ 331 V (330) | B | 11.4/54.9 |
| R207 | 7030003220 | S.RES | ERJ3GEYJ 150 V (15) | B | 9.3/55.7 |
| R208 | 7030003380 | S.RES | ERJ3GEYJ 331 V (330) | B | 10.1/57.7 |
| R209 | 7030003640 | S.RES | ERJ3GEYJ 473 V (47 k) | B | 9.9/46.6 |
| R210 | 7030003600 | S.RES | ERJ3GEYJ 223 V (22 k) | T | 112.9/63.4 |
| R301 | 7030003320 | S.RES | ERJ3GEYJ 101 V (100) | T | 9.8/86.7 |
| R302 | 7030003370 | S.RES | ERJ3GEYJ 271 V (270) | B | 10.3/75.4 |
| R303 | 7030003230 | S.RES | ERJ3GEYJ 180 V (18) | B | 15.2/74.6 |
| R304 | 7030003370 | S.RES | ERJ3GEYJ 271 V (270) | B | 19.1/75.4 |

M.=Mounted side (T: Mounted on the Top side, B: Mounted on the Bottom side)
S.=Surface mount

## [SCOPE UNIT]

| REF NO. | ORDER NO. | DESCRIPTION | M. | H/V LOCATION |
|---|---|---|---|---|
| R305 | 7030003320 | S.RES ERJ3GEYJ 101 V (100) | T | 23.7/73.9 |
| R306 | 7030003480 | S.RES ERJ3GEYJ 222 V (2.2 k) | T | 21.4/63.4 |
| R307 | 7030003550 | S.RES ERJ3GEYJ 822 V (8.2 k) | T | 18.3/66.9 |
| R308 | 7030003340 | S.RES ERJ3GEYJ 151 V (150) | T | 24.4/63.4 |
| R402 | 7030003440 | S.RES ERJ3GEYJ 102 V (1 k) | B | 13.4/89.7 |
| R403 | 7030003440 | S.RES ERJ3GEYJ 102 V (1 k) | B | 16.3/90.4 |
| R404 | 7030003440 | S.RES ERJ3GEYJ 102 V (1 k) | B | 19/86.7 |
| R405 | 7030003440 | S.RES ERJ3GEYJ 102 V (1 k) | B | 22.4/90.5 |
| R410 | 7030003560 | S.RES ERJ3GEYJ 103 V (10 k) | T | 21.3/85.8 |
| R411 | 7030003560 | S.RES ERJ3GEYJ 103 V (10 k) | T | 9.2/91.1 |
| R412 | 7030003560 | S.RES ERJ3GEYJ 103 V (10 k) | T | 13.4/92.1 |
| R413 | 7030003730 | S.RES ERJ3GEYJ 274 V (270 k) | T | 9.8/89.3 |
| R414 | 7030003560 | S.RES ERJ3GEYJ 103 V (10 k) | B | 26.9/88 |
| R415 | 7030003560 | S.RES ERJ3GEYJ 103 V (10 k) | T | 31.6/90 |
| R416 | 7310005510 | S.TRI TMC3ADCS5X 470K | T | 34.5/87 |
| R417 | 7030003630 | S.RES ERJ3GEYJ 393 V (39 k) | T | 43.1/95.4 |
| R418 | 7030003570 | S.RES ERJ3GEYJ 123 V (12 k) | T | 45.4/92.2 |
| R419 | 7030003220 | S.RES ERJ3GEYJ 150 V (15) | T | 47.9/92.3 |
| R420 | 7030003580 | S.RES ERJ3GEYJ 153 V (15 k) | T | 40.9/81.7 |
| R421 | 7030003560 | S.RES ERJ3GEYJ 103 V (10 k) | T | 40.5/85.5 |
| R422 | 7030003560 | S.RES ERJ3GEYJ 103 V (10 k) | T | 42.6/92.2 |
| R423 | 7030003540 | S.RES ERJ3GEYJ 682 V (6.8 k) | T | 43.1/94.1 |
| R425 | 7310005540 | S.TRI TMC3ADC14X 10K | T | 45.3/81.2 |
| R426 | 7030003560 | S.RES ERJ3GEYJ 103 V (10 k) | T | 48.7/76.5 |
| R427 | 7030003560 | S.RES ERJ3GEYJ 103 V (10 k) | T | 39.9/77.2 |
| R428 | 7030003680 | S.RES ERJ3GEYJ 104 V (100 k) | T | 37/75.7 |
| R429 | 7030003650 | S.RES ERJ3GEYJ 563 V (56 k) | T | 34.7/67.7 |
| R430 | 7030003740 | S.RES ERJ3GEYJ 334 V (330 k) | T | 38.8/73.9 |
| R431 | 7030003740 | S.RES ERJ3GEYJ 334 V (330 k) | T | 36.2/73.9 |
| R432 | 7030003640 | S.RES ERJ3GEYJ 473 V (47 k) | T | 39.6/81.7 |
| R433 | 7030003680 | S.RES ERJ3GEYJ 104 V (100 k) | T | 38.8/66.4 |
| R434 | 7030003320 | S.RES ERJ3GEYJ 101 V (100) | T | 33.4/66.9 |
| R435 | 7030003680 | S.RES ERJ3GEYJ 104 V (100 k) | T | 40.1/66.4 |
| R436 | 7030003680 | S.RES ERJ3GEYJ 104 V (100 k) | T | 36.9/67 |
| R437 | 7030003680 | S.RES ERJ3GEYJ 104 V (100 k) | T | 43.8/67.7 |
| R438 | 7030003680 | S.RES ERJ3GEYJ 104 V (100 k) | T | 43.8/70.4 |
| R500 | 7030003860 | S.RES ERJ3GE JPW V | T | 53.2/71.7 |
| R501 | 7030003320 | S.RES ERJ3GEYJ 101 V (100) | T | 55.1/73 |
| R502 | 7030003560 | S.RES ERJ3GEYJ 103 V (10 k) | B | 56.3/74.6 |
| R503 | 7030003560 | S.RES ERJ3GEYJ 103 V (10 k) | B | 59.2/75.4 |
| R504 | 7030003560 | S.RES ERJ3GEYJ 103 V (10 k) | T | 60.8/74.2 |
| R505 | 7030003560 | S.RES ERJ3GEYJ 103 V (10 k) | T | 61.6/76 |
| R506 | 7030003560 | S.RES ERJ3GEYJ 103 V (10 k) | B | 57.3/78.2 |
| R507 | 7030003320 | S.RES ERJ3GEYJ 101 V (100) | T | 61.5/87.1 |
| R509 | 7030003640 | S.RES ERJ3GEYJ 473 V (47 k) | T | 60.5/89.8 |
| R602 | 7030003560 | S.RES ERJ3GEYJ 103 V (10 k) | B | 101.3/75.6 |
| R603 | 7030003440 | S.RES ERJ3GEYJ 102 V (1 k) | B | 83.7/77.3 |
| R604 | 7030003560 | S.RES ERJ3GEYJ 103 V (10 k) | B | 92.1/67.4 |
| R605 | 7030003560 | S.RES ERJ3GEYJ 103 V (10 k) | B | 89.8/65.8 |
| R606 | 7030003440 | S.RES ERJ3GEYJ 102 V (1 k) | T | 79.6/95.8 |
| R607 | 7030003440 | S.RES ERJ3GEYJ 102 V (1 k) | B | 77.6/95.9 |
| R608 | 7030003440 | S.RES ERJ3GEYJ 102 V (1 k) | B | 71.8/88.2 |
| R609 | 7030003560 | S.RES ERJ3GEYJ 103 V (10 k) | T | 83.5/65.8 |
| R610 | 7030003800 | S.RES ERJ3GEYJ 105 V (1 M) | T | 70.5/67.6 |
| R611 | 7030004040 | S.RES ERJ3GEYJ 4R7 V (4.7) | T | 66.2/70.3 |
| R612 | 7030004040 | S.RES ERJ3GEYJ 4R7 V (4.7) | T | 67.5/70.3 |
| R615 | 7030003320 | S.RES ERJ3GEYJ 101 V (100) | T | 72.9/65.7 |
| R616 | 7030003520 | S.RES ERJ3GEYJ 472 V (4.7 k) | T | 73.7/93.5 |
| R617 | 7030003520 | S.RES ERJ3GEYJ 472 V (4.7 k) | T | 72.4/93.5 |
| R618 | 7030003560 | S.RES ERJ3GEYJ 103 V (10 k) | B | 81.8/66.8 |
| R619 | 7030003560 | S.RES ERJ3GEYJ 103 V (10 k) | B | 88/66.8 |
| R620 | 7030003440 | S.RES ERJ3GEYJ 102 V (1 k) | B | 73.2/88.9 |
| R621 | 7030003440 | S.RES ERJ3GEYJ 102 V (1 k) | B | 72.6/84.7 |
| R622 | 7030003860 | S.RES ERJ3GE JPW V | B | 111.9/79.5 |
| R623 | 7030003860 | S.RES ERJ3GE JPW V | B | 106.1/78.5 |
| R633 | 7030003560 | S.RES ERJ3GEYJ 103 V (10 k) | B | 74.7/74.4 |
| R634 | 7030003860 | S.RES ERJ3GE JPW V | T | 74/70.4 |
| R635 | 7030003280 | S.RES ERJ3GEYJ 470 V (47) | T | 73.4/68.4 |
| R636 | 7030003280 | S.RES ERJ3GEYJ 470 V (47) | T | 72.7/70.4 |
| R701 | 7030003240 | S.RES ERJ3GEYJ 220 V (22) | T | 73/51.7 |
| R702 | 7030003560 | S.RES ERJ3GEYJ 103 V (10 k) | T | 77.3/54.4 |
| R703 | 7030003320 | S.RES ERJ3GEYJ 101 V (100) | T | 72.7/55.1 |
| R704 | 7030003280 | S.RES ERJ3GEYJ 470 V (47) | T | 73.3/57 |
| R705 | 7030003340 | S.RES ERJ3GEYJ 151 V (150) | T | 77.4/57 |
| R720 | 7030003370 | S.RES ERJ3GEYJ 271 V (270) | T | 107/43.2 |
| R721 | 7030003560 | S.RES ERJ3GEYJ 103 V (10 k) | T | 104/45.3 |
| R722 | 7030003340 | S.RES ERJ3GEYJ 151 V (150) | T | 107.2/45.9 |
| R723 | 7030003440 | S.RES ERJ3GEYJ 102 V (1 k) | B | 91.7/28.7 |
| R724 | 7030003440 | S.RES ERJ3GEYJ 102 V (1 k) | B | 91.1/30.6 |
| R725 | 7030003440 | S.RES ERJ3GEYJ 102 V (1 k) | B | 87.6/28.5 |
| R726 | 7030003440 | S.RES ERJ3GEYJ 102 V (1 k) | B | 91.2/26.8 |
| R727 | 7030003440 | S.RES ERJ3GEYJ 102 V (1 k) | B | 94.8/43 |
| R729 | 7030003280 | S.RES ERJ3GEYJ 470 V (47) | T | 98.7/45.6 |
| R730 | 7030003560 | S.RES ERJ3GEYJ 103 V (10 k) | B | 96.4/40.1 |
| R731 | 7030003460 | S.RES ERJ3GEYJ 152 V (1.5 k) | T | 105.1/38.6 |
| R732 | 7030003510 | S.RES ERJ3GEYJ 392 V (3.9 k) | T | 106.5/34.2 |
| R734 | 7030003510 | S.RES ERJ3GEYJ 392 V (3.9 k) | T | 102.5/42.7 |
| R735 | 7030003280 | S.RES ERJ3GEYJ 470 V (47) | T | 106.5/30.9 |
| R736 | 7030003280 | S.RES ERJ3GEYJ 470 V (47) | T | 106.5/32.2 |
| R737 | 7030003440 | S.RES ERJ3GEYJ 102 V (1 k) | T | 88.4/24 |
| R738 | 7030003640 | S.RES ERJ3GEYJ 473 V (47 k) | T | 88.1/46.1 |
| R739 | 7030003510 | S.RES ERJ3GEYJ 392 V (3.9 k) | T | 106.5/35.5 |
| R741 | 7030003860 | S.RES ERJ3GE JPW V | B | 109.8/26.2 |
| R742 | 7030003860 | S.RES ERJ3GE JPW V | T | 86.8/46 |
| R744 | 7030003860 | S.RES ERJ3GE JPW V | T | 87.7/26.2 |
| R745 | 7030003860 | S.RES ERJ3GE JPW V | T | 85/27.5 |
| R748 | 7030003860 | S.RES ERJ3GE JPW V | T | 89.7/24 |
| R764 | 7030003370 | S.RES ERJ3GEYJ 271 V (270) | T | 48/21.5 |
| R765 | 7030003230 | S.RES ERJ3GEYJ 180 V (18) | T | 45.6/20.8 |
| R766 | 7030003370 | S.RES ERJ3GEYJ 271 V (270) | T | 43.4/21.5 |
| R767 | 7030003860 | S.RES ERJ3GE JPW V | T | 95.7/21.5 |
| R771 | 7030003860 | S.RES ERJ3GE JPW V | T | 41/20.8 |
| R801 | 7030003440 | S.RES ERJ3GEYJ 102 V (1 k) | B | 68.1/38 |
| R802 | 7030003440 | S.RES ERJ3GEYJ 102 V (1 k) | B | 71.2/35.6 |

## [SCOPE UNIT]

| REF NO. | ORDER NO. | DESCRIPTION | M. | H/V LOCATION |
|---|---|---|---|---|
| R803 | 7030003440 | S.RES ERJ3GEYJ 102 V (1 k) | B | 68.1/35.7 |
| R806 | 7030003520 | S.RES ERJ3GEYJ 472 V (4.7 k) | T | 62.4/40.1 |
| R808 | 7030003600 | S.RES ERJ3GEYJ 223 V (22 k) | T | 61.7/42.6 |
| R809 | 7030003840 | S.RES ERJ3GEYJ 225 V (2.2 M) | T | 63.9/41.6 |
| R810 | 7030003370 | S.RES ERJ3GEYJ 271 V (270) | T | 74.1/35.2 |
| R811 | 7030003560 | S.RES ERJ3GEYJ 103 V (10 k) | T | 73.8/40.2 |
| R812 | 7030003280 | S.RES ERJ3GEYJ 470 V (47) | T | 71/31.6 |
| R813 | 7030003340 | S.RES ERJ3GEYJ 151 V (150) | T | 73.8/45.4 |
| R814 | 7030003500 | S.RES ERJ3GEYJ 332 V (3.3 k) | T | 60.3/41.1 |
| R821 | 7030003680 | S.RES ERJ3GEYJ 104 V (100 k) | T | 39.3/45.9 |
| R822 | 7030003680 | S.RES ERJ3GEYJ 104 V (100 k) | T | 46.8/44.6 |
| R823 | 7030003370 | S.RES ERJ3GEYJ 271 V (270) | T | 43.5/41.7 |
| R841 | 7030003200 | S.RES ERJ3GEYJ 100 V (10) | T | 37.9/39.9 |
| R842 | 7030003360 | S.RES ERJ3GEYJ 221 V (220) | T | 42.2/35 |
| R843 | 7030003500 | S.RES ERJ3GEYJ 332 V (3.3 k) | T | 40.1/39.1 |
| R844 | 7030003540 | S.RES ERJ3GEYJ 682 V (6.8 k) | T | 38.6/37.8 |
| R845 | 7030003360 | S.RES ERJ3GEYJ 221 V (220) | T | 38.6/36.5 |
| R846 | 7030003380 | S.RES ERJ3GEYJ 331 V (330) | T | 40.4/32 |
| R847 | 7030003370 | S.RES ERJ3GEYJ 271 V (270) | T | 30.5/30 |
| R848 | 7030003540 | S.RES ERJ3GEYJ 682 V (6.8 k) | T | 28.4/37.3 |
| R849 | 7030003500 | S.RES ERJ3GEYJ 332 V (3.3 k) | T | 30.3/34.8 |
| R850 | 7030003390 | S.RES ERJ3GEYJ 391 V (390) | T | 26.5/37.9 |
| R851 | 7030003360 | S.RES ERJ3GEYJ 221 V (220) | T | 24.4/37.1 |
| R852 | 7030003490 | S.RES ERJ3GEYJ 272 V (2.7 k) | T | 28.4/40 |
| R853 | 7030003510 | S.RES ERJ3GEYJ 392 V (3.9 k) | T | 30.3/41 |
| R854 | 7030003360 | S.RES ERJ3GEYJ 221 V (220) | T | 30.1/42.4 |
| R855 | 7030008180 | S.RES ERJ12YJ331U (330) | T | 42.5/52.9 |
| R856 | 7030003370 | S.RES ERJ3GEYJ 271 V (270) | T | 22.9/60.3 |
| R857 | 7030003230 | S.RES ERJ3GEYJ 180 V (18) | T | 20.7/59.6 |
| R858 | 7030003320 | S.RES ERJ3GEYJ 101 V (100) | T | 20.7/61.1 |
| R859 | 7030003260 | S.RES ERJ3GEYJ 330 V (33) | T | 24.4/44.2 |
| R860 | 7030003400 | S.RES ERJ3GEYJ 471 V (470) | T | 42.4/32 |
| R861 | 7030003860 | S.RES ERJ3GE JPW V | T | 24.4/60.3 |
| R905 | 7030003620 | S.RES ERJ3GEYJ 333 V (33 k) | B | 127/108.8 |
| R906 | 7030003540 | S.RES ERJ3GEYJ 682 V (6.8 k) | B | 128.6/105.8 |
| R907 | 7030003580 | S.RES ERJ3GEYJ 153 V (15 k) | B | 127.2/111.2 |
| R908 | 7030003640 | S.RES ERJ3GEYJ 473 V (47 k) | B | 124.9/108.8 |
| R913 | 7030003370 | S.RES ERJ3GEYJ 271 V (270) | T | 57.4/112.7 |
| R914 | 7030003370 | S.RES ERJ3GEYJ 271 V (270) | T | 45.9/113.5 |
| R951 | 7030003860 | S.RES ERJ3GE JPW V | B | 120.4/122.7 |
| R952 | 7030003860 | S.RES ERJ3GE JPW V | B | 97.5/126.3 |
| R953 | 7030003860 | S.RES ERJ3GE JPW V | B | 97.5/124.7 |
| R954 | 7030003860 | S.RES ERJ3GE JPW V | B | 114.7/103.6 |
| R955 | 7030003860 | S.RES ERJ3GE JPW V | T | 48.6/112.9 |
| R956 | 7030003860 | S.RES ERJ3GE JPW V | T | 39.7/110.6 |
| | | | | |
| C1 | 4030006880 | S.CER C1608 JB 1H 472K-T | T | 84.1/6.7 |
| C2 | 4030006880 | S.CER C1608 JB 1H 472K-T | T | 86.1/6.7 |
| C3 | 4030006880 | S.CER C1608 JB 1H 472K-T | T | 82.8/15.8 |
| C4 | 4030011340 | S.CER C1608 CH 1H 471J-T | T | 76.6/16.1 |
| C5 | 4030011340 | S.CER C1608 CH 1H 471J-T | T | 74.1/12.9 |
| C6 | 4030006880 | S.CER C1608 JB 1H 472K-T | T | 74.9/16.1 |
| C7 | 4030006880 | S.CER C1608 JB 1H 472K-T | T | 70.1/12.8 |
| C8 | 4030006880 | S.CER C1608 JB 1H 472K-T | T | 71.3/20 |
| C9 | 4030006880 | S.CER C1608 JB 1H 472K-T | T | 70/15.7 |
| C10 | 4030011600 | S.CER C1608 JB 1E 104K-T | T | 67.8/9.5 |
| C11 | 4030009510 | S.CER C1608 CH 1H 010B-T | B | 58.9/16.3 |
| C12 | 4030007040 | S.CER C1608 CH 1H 180J-T | B | 61.9/10 |
| C13 | 4030007040 | S.CER C1608 CH 1H 180J-T | B | 53.2/10 |
| C14 | 4030011340 | S.CER C1608 CH 1H 471J-T | B | 47.6/15 |
| C15 | 4030006880 | S.CER C1608 JB 1H 472K-T | T | 40.2/16 |
| C16 | 4030006880 | S.CER C1608 JB 1H 472K-T | T | 49.9/3.5 |
| C17 | 4030006880 | S.CER C1608 JB 1H 472K-T | B | 38.6/10 |
| C18 | 4030006960 | S.CER C1608 CH 1H 050C-T | T | 44/10.6 |
| C21 | 4030006880 | S.CER C1608 JB 1H 472K-T | T | 78.8/57 |
| C22 | 4030006880 | S.CER C1608 JB 1H 472K-T | B | 93.1/11.6 |
| C23 | 4030011600 | S.CER C1608 JB 1E 104K-T | T | 90.5/12.8 |
| C24 | 4030006880 | S.CER C1608 JB 1H 472K-T | T | 85.4/11.8 |
| C31 | 4030006880 | S.CER C1608 JB 1H 472K-T | T | 78.3/9.4 |
| C32 | 4030006880 | S.CER C1608 JB 1H 472K-T | T | 82.8/6.7 |
| C33 | 4030006880 | S.CER C1608 JB 1H 472K-T | T | 90.3/8.6 |
| C34 | 4030006880 | S.CER C1608 JB 1H 472K-T | T | 87.6/6.7 |
| C35 | 4030006900 | S.CER C1608 JB 1H 103K-T | T | 83.6/2.4 |
| C36 | 4030006900 | S.CER C1608 JB 1H 103K-T | T | 80.3/3.3 |
| C37 | 4030006900 | S.CER C1608 JB 1H 103K-T | T | 86.1/2.4 |
| C38 | 4030006900 | S.CER C1608 JB 1H 103K-T | T | 90.7/3.5 |
| C39 | 4030006860 | S.CER C1608 JB 1H 102K-T | T | 88.4/14.7 |
| C40 | 4030006860 | S.CER C1608 JB 1H 102K-T | T | 84.6/13.9 |
| C41 | 4610001830 | S.TRI TZB4S100AB10R00 | T | 57.5/19.3 |
| C42 | 4030007030 | S.CER C1608 CH 1H 150J-T | T | 68.7/15.7 |
| C43 | 4030007120 | S.CER C1608 CH 1H 820J-T | T | 67.9/17.7 |
| C44 | 4030007100 | S.CER C1608 CH 1H 560J-T | T | 67/15.7 |
| C45 | 4030007040 | S.CER C1608 CH 1H 180J-T | T | 64.9/16.4 |
| C46 | 4030008750 | S.CER C1608 CH 1H 360J-T | T | 64.9/14.9 |
| C51 | 4030006860 | S.CER C1608 JB 1H 102K-T | T | 83.2/9.8 |
| C52 | 4030006860 | S.CER C1608 JB 1H 102K-T | T | 87.1/9.8 |
| C53 | 4510008540 | S.ELE EEE1CA100SR | T | 31.7/95.8 |
| C54 | 4510008540 | S.ELE EEE1CA100SR | T | 46.9/69.3 |
| C55 | 4030011600 | S.CER C1608 JB 1E 104K-T | T | 20.4/94.8 |
| C56 | 4510008540 | S.ELE EEE1CA100SR | T | 16.6/95.8 |
| C57 | 4030011600 | S.CER C1608 JB 1E 104K-T | T | 27.9/95.9 |
| C101 | 4030006880 | S.CER C1608 JB 1H 472K-T | T | 33.8/16.7 |
| C102 | 4030007150 | S.CER C1608 CH 1H 151J-T | T | 24.6/19 |
| C103 | 4030011600 | S.CER C1608 JB 1E 104K-T | T | 24.6/21.9 |
| C106 | 4030006880 | S.CER C1608 JB 1H 472K-T | T | 33.8/20.6 |
| C107 | 4030007100 | S.CER C1608 CH 1H 560J-T | T | 23.1/16.4 |
| C108 | 4030007110 | S.CER C1608 CH 1H 680J-T | B | 23.7/21.2 |
| C109 | 4030007140 | S.CER C1608 CH 1H 121J-T | B | 22.4/18.7 |
| C110 | 4030007110 | S.CER C1608 CH 1H 680J-T | B | 21.6/21.2 |
| C201 | 4030007040 | S.CER C1608 CH 1H 180J-T | T | 10.8/24.5 |
| C202 | 4030007040 | S.CER C1608 CH 1H 180J-T | T | 4.7/30.3 |
| C204 | 4030006880 | S.CER C1608 JB 1H 472K-T | T | 11.3/34.5 |
| C205 | 4030007070 | S.CER C1608 CH 1H 330J-T | B | 5.8/39.8 |

M.=Mounted side (T: Mounted on the Top side, B: Mounted on the Bottom side)
S.=Surface mount

## [SCOPE UNIT]

| REF NO. | ORDER NO. | DESCRIPTION | M. | H/V LOCATION |
|---|---|---|---|---|
| C206 | 4030006880 | S.CER C1608 JB 1H 472K-T | T | 11.3/38.5 |
| C207 | 4030006960 | S.CER C1608 CH 1H 050C-T | T | 11.2/42.3 |
| C208 | 4030007070 | S.CER C1608 CH 1H 330J-T | B | 8.4/51 |
| C209 | 4030006880 | S.CER C1608 JB 1H 472K-T | T | 7.6/46.1 |
| C210 | 4030011600 | S.CER C1608 JB 1E 104K-T | B | 2.1/50.2 |
| C211 | 4030009550 | S.CER C1608 CH 1H 2R5B-T | T | 10.8/23.2 |
| C212 | 4030006940 | S.CER C1608 CH 1H 030C-T | T | 4.7/28.9 |
| C213 | 4550007320 | S.TAN F930J226MAABMA | T | 111.2/63.3 |
| C214 | 4550007320 | S.TAN F930J226MAABMA | B | 117.7/65.4 |
| C215 | 4030011600 | S.CER C1608 JB 1E 104K-T | T | 119.9/66.4 |
| C216 | 4030017490 | S.CER C1608 JB 1A 105K-T | T | 112.9/66.4 |
| C301 | 4030007040 | S.CER C1608 CH 1H 180J-T | T | 18.8/70.5 |
| C302 | 4030006880 | S.CER C1608 JB 1H 472K-T | T | 23.7/71.1 |
| C303 | 4030006880 | S.CER C1608 JB 1H 472K-T | T | 19.9/63.4 |
| C304 | 4030006880 | S.CER C1608 JB 1H 472K-T | T | 22.9/63.4 |
| C401 | 4030008850 | S.CER C1608 JB 1H 123K-T | T | 11.1/86.7 |
| C403 | 4030018610 | S.CER C1608 CH 1H 182J-T | B | 15.6/87.5 |
| C404 | 4030018580 | S.CER C1608 CH 1H 821J-T | T | 20.9/89.2 |
| C405 | 4030007140 | S.CER C1608 CH 1H 121J-T | T | 20.9/87.9 |
| C406 | 4030017840 | S.CER C2012 CH 1H 222J-T | B | 22.6/86.7 |
| C407 | 4030017840 | S.CER C2012 CH 1H 222J-T | B | 22.6/88.7 |
| C408 | 4030007010 | S.CER C1608 CH 1H 100D-T | T | 21.6/90.5 |
| C409 | 4030007140 | S.CER C1608 CH 1H 121J-T | T | 21.6/91.8 |
| C410 | 4030011600 | S.CER C1608 JB 1E 104K-T | T | 17.7/92.1 |
| C411 | 4030011600 | S.CER C1608 JB 1E 104K-T | T | 13.4/85.2 |
| C420 | 4030011600 | S.CER C1608 JB 1E 104K-T | T | 8.5/89.3 |
| C421 | 4030006920 | S.CER C1608 CH 1H 010C-T | T | 11.1/89.3 |
| C422 | 4030006920 | S.CER C1608 CH 1H 010C-T | T | 31.6/87.2 |
| C423 | 4030011600 | S.CER C1608 JB 1E 104K-T | T | 29/92.1 |
| C424 | 4030011600 | S.CER C1608 JB 1E 104K-T | T | 24.7/85.2 |
| C425 | 4030011600 | S.CER C1608 JB 1E 104K-T | T | 40.2/95.4 |
| C426 | 4030006900 | S.CER C1608 JB 1H 103K-T | T | 47.4/89.7 |
| C427 | 4030011600 | S.CER C1608 JB 1E 104K-T | T | 35.9/81 |
| C428 | 4510008550 | S.ELE EEE1HA010SR | T | 38/92.2 |
| C429 | 4030011600 | S.CER C1608 JB 1E 104K-T | T | 47.4/85.4 |
| C431 | 4030006900 | S.CER C1608 JB 1H 103K-T | T | 38.5/77.2 |
| C432 | 4030011600 | S.CER C1608 JB 1E 104K-T | T | 41.4/73.9 |
| C433 | 4510008540 | S.ELE EEE1CA100SR | T | 31.4/73.2 |
| C434 | 4030011600 | S.CER C1608 JB 1E 104K-T | T | 40.5/88.5 |
| C501 | 4030011600 | S.CER C1608 JB 1E 104K-T | T | 52.5/73 |
| C502 | 4510008540 | S.ELE EEE1CA100SR | T | 52.2/68.5 |
| C503 | 4510008540 | S.ELE EEE1CA100SR | T | 59.3/70.5 |
| C504 | 4030011600 | S.CER C1608 JB 1E 104K-T | T | 62/78.6 |
| C505 | 4510008540 | S.ELE EEE1CA100SR | T | 59.5/64.5 |
| C506 | 4030011600 | S.CER C1608 JB 1E 104K-T | T | 61.6/81.8 |
| C507 | 4510008580 | S.ELE EEE0JA470SR | T | 51/87.4 |
| C508 | 4030017490 | S.CER C1608 JB 1A 105K-T | T | 49.3/82.9 |
| C509 | 4030011600 | S.CER C1608 JB 1E 104K-T | T | 59.6/87.9 |
| C521 | 4510009280 | S.ELE EEE1EA4R7SR | T | 59.6/93.9 |
| C522 | 4030011600 | S.CER C1608 JB 1E 104K-T | T | 55.5/92.2 |
| C523 | 4510008550 | S.ELE EEE1HA010SR | T | 51.1/93.9 |
| C524 | 4030011600 | S.CER C1608 JB 1E 104K-T | T | 55.2/97 |
| C551 | 4550006960 | S.TAN TEESVB2 0G 107M8R | T | 99.1/64.3 |
| C601 | 4030011600 | S.CER C1608 JB 1E 104K-T | B | 99.4/93.9 |
| C602 | 4030011600 | S.CER C1608 JB 1E 104K-T | B | 98.6/67.3 |
| C603 | 4030011600 | S.CER C1608 JB 1E 104K-T | B | 100.9/91.6 |
| C604 | 4030011600 | S.CER C1608 JB 1E 104K-T | B | 101.5/68.5 |
| C605 | 4030011600 | S.CER C1608 JB 1E 104K-T | B | 93.2/85.9 |
| C606 | 4030011600 | S.CER C1608 JB 1E 104K-T | B | 93.8/84.5 |
| C607 | 4030011600 | S.CER C1608 JB 1E 104K-T | B | 93/80.1 |
| C608 | 4030011600 | S.CER C1608 JB 1E 104K-T | B | 93.8/78.8 |
| C609 | 4030011600 | S.CER C1608 JB 1E 104K-T | B | 93.7/75.8 |
| C610 | 4030011600 | S.CER C1608 JB 1E 104K-T | B | 91.3/86.8 |
| C611 | 4030011600 | S.CER C1608 JB 1E 104K-T | B | 90.3/75.9 |
| C612 | 4030011600 | S.CER C1608 JB 1E 104K-T | B | 87.8/93.9 |
| C613 | 4030011600 | S.CER C1608 JB 1E 104K-T | B | 88.4/86.8 |
| C614 | 4030011600 | S.CER C1608 JB 1E 104K-T | B | 88.5/74 |
| C615 | 4030011600 | S.CER C1608 JB 1E 104K-T | B | 86.9/86 |
| C616 | 4030011600 | S.CER C1608 JB 1E 104K-T | B | 87.1/75.9 |
| C617 | 4030011600 | S.CER C1608 JB 1E 104K-T | T | 87.9/67 |
| C618 | 4030011600 | S.CER C1608 JB 1E 104K-T | B | 83.9/86 |
| C619 | 4030011600 | S.CER C1608 JB 1E 104K-T | B | 83.5/75.7 |
| C620 | 4030011600 | S.CER C1608 JB 1E 104K-T | B | 81.1/86 |
| C621 | 4030011600 | S.CER C1608 JB 1E 104K-T | B | 81.9/83.6 |
| C622 | 4030011600 | S.CER C1608 JB 1E 104K-T | B | 81.9/81.9 |
| C623 | 4030011600 | S.CER C1608 JB 1E 104K-T | B | 81/77.2 |
| C624 | 4030011600 | S.CER C1608 JB 1E 104K-T | B | 81/74.5 |
| C625 | 4030011600 | S.CER C1608 JB 1E 104K-T | B | 74.5/91.6 |
| C626 | 4030011600 | S.CER C1608 JB 1E 104K-T | B | 74.5/77.2 |
| C627 | 4030011600 | S.CER C1608 JB 1E 104K-T | B | 78.3/67.4 |
| C628 | 4030011600 | S.CER C1608 JB 1E 104K-T | B | 75.5/93.8 |
| C629 | 4030011600 | S.CER C1608 JB 1E 104K-T | B | 73.8/69.4 |
| C630 | 4030011600 | S.CER C1608 JB 1E 104K-T | T | 74/76.5 |
| C631 | 4030011600 | S.CER C1608 JB 1E 104K-T | T | 74/80.8 |
| C632 | 4030011600 | S.CER C1608 JB 1E 104K-T | T | 73.9/73.2 |
| C633 | 4030011600 | S.CER C1608 JB 1E 104K-T | T | 102.8/90.4 |
| C634 | 4030011600 | S.CER C1608 JB 1E 104K-T | T | 102.9/76.2 |
| C635 | 4030011600 | S.CER C1608 JB 1E 104K-T | B | 101.2/83.5 |
| C636 | 4030011600 | S.CER C1608 JB 1E 104K-T | B | 101.2/80.3 |
| C637 | 4030011600 | S.CER C1608 JB 1E 104K-T | B | 101.4/72 |
| C638 | 4030011600 | S.CER C1608 JB 1E 104K-T | B | 96/93.9 |
| C639 | 4030011600 | S.CER C1608 JB 1E 104K-T | T | 104/87.3 |
| C640 | 4030011600 | S.CER C1608 JB 1E 104K-T | B | 93/82.8 |
| C641 | 4030011600 | S.CER C1608 JB 1E 104K-T | B | 93.8/87.5 |
| C642 | 4030011600 | S.CER C1608 JB 1E 104K-T | B | 93.8/81.4 |
| C643 | 4030011600 | S.CER C1608 JB 1E 104K-T | B | 93/77.2 |
| C644 | 4030011600 | S.CER C1608 JB 1E 104K-T | B | 93/74.5 |
| C645 | 4030011600 | S.CER C1608 JB 1E 104K-T | B | 94.8/67.4 |
| C646 | 4030011600 | S.CER C1608 JB 1E 104K-T | B | 92.8/93.9 |
| C647 | 4030011600 | S.CER C1608 JB 1E 104K-T | T | 94.3/67 |
| C648 | 4030011600 | S.CER C1608 JB 1E 104K-T | B | 89.7/86 |
| C649 | 4030011600 | S.CER C1608 JB 1E 104K-T | B | 85.4/67.5 |
| C650 | 4030011600 | S.CER C1608 JB 1E 104K-T | B | 85.5/86.7 |
| C651 | 4030011600 | S.CER C1608 JB 1E 104K-T | B | 85.4/74 |

## [SCOPE UNIT]

| REF NO. | ORDER NO. | DESCRIPTION | M. | H/V LOCATION |
|---|---|---|---|---|
| C652 | 4030011600 | S.CER C1608 JB 1E 104K-T | B | 79.4/93.8 |
| C653 | 4030011600 | S.CER C1608 JB 1E 104K-T | B | 82.5/86.8 |
| C654 | 4030011600 | S.CER C1608 JB 1E 104K-T | T | 78.7/66.9 |
| C655 | 4030011600 | S.CER C1608 JB 1E 104K-T | B | 81.9/79.9 |
| C656 | 4030011600 | S.CER C1608 JB 1E 104K-T | B | 74.5/84.6 |
| C657 | 4030011600 | S.CER C1608 JB 1E 104K-T | B | 74.5/80.3 |
| C658 | 4030011600 | S.CER C1608 JB 1E 104K-T | B | 74.6/71.4 |
| C659 | 4030011600 | S.CER C1608 JB 1E 104K-T | B | 74.5/88.1 |
| C660 | 4510008540 | S.ELE EEE1CA100SR | T | 67.6/75 |
| C661 | 4030011600 | S.CER C1608 JB 1E 104K-T | B | 72.8/74.7 |
| C662 | 4030011600 | S.CER C1608 JB 1E 104K-T | T | 88.3/95.9 |
| C663 | 4030011600 | S.CER C1608 JB 1E 104K-T | T | 68.8/70.3 |
| C664 | 4030011600 | S.CER C1608 JB 1E 104K-T | T | 66.2/67.6 |
| C665 | 4030011600 | S.CER C1608 JB 1E 104K-T | B | 67.5/76.8 |
| C666 | 4550007310 | S.TAN F930J227MNMBMA | B | 108.6/73.9 |
| C667 | 4550007310 | S.TAN F930J227MNMBMA | B | 108.6/68.6 |
| C671 | 4030011600 | S.CER C1608 JB 1E 104K-T | T | 114.2/70.1 |
| C672 | 4030006880 | S.CER C1608 JB 1H 472K-T | T | 72.9/64.4 |
| C701 | 4030011600 | S.CER C1608 JB 1E 104K-T | T | 76/57 |
| C702 | 4030011600 | S.CER C1608 JB 1E 104K-T | T | 72.7/53.6 |
| C703 | 4030011600 | S.CER C1608 JB 1E 104K-T | T | 74.6/57 |
| C720 | 4030006880 | S.CER C1608 JB 1H 472K-T | T | 82.9/38.1 |
| C721 | 4030011600 | S.CER C1608 JB 1E 104K-T | T | 83.2/40.2 |
| C722 | 4510008540 | S.ELE EEE1CA100SR | T | 82.6/44.1 |
| C723 | 4030006880 | S.CER C1608 JB 1H 472K-T | T | 109.9/37.4 |
| C724 | 4030011600 | S.CER C1608 JB 1E 104K-T | T | 109.9/38.9 |
| C725 | 4510008540 | S.ELE EEE1CA100SR | T | 110.1/33.2 |
| C726 | 4030006880 | S.CER C1608 JB 1H 472K-T | T | 108.6/45.9 |
| C727 | 4030006880 | S.CER C1608 JB 1H 472K-T | T | 105.6/45.3 |
| C730 | 4030011600 | S.CER C1608 JB 1E 104K-T | T | 84.2/35.3 |
| C731 | 4030011600 | S.CER C1608 JB 1E 104K-T | T | 84.2/38.1 |
| C733 | 4030011600 | S.CER C1608 JB 1E 104K-T | T | 93.4/26.3 |
| C734 | 4030011600 | S.CER C1608 JB 1E 104K-T | T | 103.1/29.9 |
| C736 | 4030011600 | S.CER C1608 JB 1E 104K-T | T | 96.8/44.8 |
| C737 | 4030011600 | S.CER C1608 JB 1E 104K-T | T | 103/40.9 |
| C738 | 4030011600 | S.CER C1608 JB 1E 104K-T | T | 96.5/26.3 |
| C739 | 4030011600 | S.CER C1608 JB 1E 104K-T | T | 99.6/26.3 |
| C740 | 4030011600 | S.CER C1608 JB 1E 104K-T | T | 103.1/37.4 |
| C741 | 4030011600 | S.CER C1608 JB 1E 104K-T | T | 92.6/45.1 |
| C742 | 4030011600 | S.CER C1608 JB 1E 104K-T | T | 90/45.1 |
| C750 | 4030006900 | S.CER C1608 JB 1H 103K-T | T | 103.2/34.5 |
| C751 | 4030006900 | S.CER C1608 JB 1H 103K-T | T | 105.1/37.3 |
| C760 | 4030006880 | S.CER C1608 JB 1H 472K-T | T | 110.9/20.8 |
| C761 | 4030007150 | S.CER C1608 CH 1H 151J-T | T | 110.1/22.8 |
| C762 | 4030007110 | S.CER C1608 CH 1H 680J-T | T | 108.4/21.6 |
| C763 | 4030011280 | S.CER C1608 CH 1H 271J-T | T | 106/25.1 |
| C764 | 4030007080 | S.CER C1608 CH 1H 390J-T | T | 103.4/20.8 |
| C765 | 4030011830 | S.CER C1608 CH 1H 301J-T | T | 100/24.3 |
| C766 | 4030007020 | S.CER C1608 CH 1H 120J-T | T | 100/21.7 |
| C767 | 4030007170 | S.CER C1608 CH 1H 221J-T | T | 95.7/24.3 |
| C768 | 4030011280 | S.CER C1608 CH 1H 271J-T | T | 93.5/20.4 |
| C769 | 4030006860 | S.CER C1608 JB 1H 102K-T | T | 91.4/21.3 |
| C770 | 4030011280 | S.CER C1608 CH 1H 271J-T | T | 89.3/20.5 |
| C801 | 4030006880 | S.CER C1608 JB 1H 472K-T | T | 66.2/40 |
| C802 | 4510008540 | S.ELE EEE1CA100SR | T | 69/44.8 |
| C803 | 4030006900 | S.CER C1608 JB 1H 103K-T | T | 60.4/37.1 |
| C805 | 4550007660 | S.TAN F931E105MAABMA | T | 58.5/38.7 |
| C806 | 4340000240 | S.MLR ECHU 1C 682JX5 | T | 64.2/43.3 |
| C807 | 4030006880 | S.CER C1608 JB 1H 472K-T | T | 69.6/33.3 |
| C808 | 4030006880 | S.CER C1608 JB 1H 472K-T | B | 62.7/32 |
| C809 | 4510008540 | S.ELE EEE1CA100SR | T | 64.9/25.7 |
| C810 | 4030006880 | S.CER C1608 JB 1H 472K-T | T | 73.8/42.8 |
| C811 | 4030006880 | S.CER C1608 JB 1H 472K-T | T | 73.3/32.9 |
| C812 | 4030006880 | S.CER C1608 JB 1H 472K-T | T | 73.8/30.9 |
| C813 | 4030011600 | S.CER C1608 JB 1E 104K-T | T | 65.9/31.8 |
| C821 | 4030007060 | S.CER C1608 CH 1H 270J-T | T | 57.8/46.5 |
| C822 | 4030007100 | S.CER C1608 CH 1H 560J-T | T | 54.4/45.7 |
| C823 | 4030006960 | S.CER C1608 CH 1H 050C-T | T | 55.7/45.7 |
| C824 | 4610001850 | S.TRI TZB4R200AB10R00 | T | 50.6/44.7 |
| C825 | 4030007130 | S.CER C1608 CH 1H 101J-T | T | 46.9/46.8 |
| C826 | 4030007060 | S.CER C1608 CH 1H 270J-T | T | 40.9/45.9 |
| C827 | 4030007020 | S.CER C1608 CH 1H 120J-T | T | 45.5/44.6 |
| C828 | 4030006880 | S.CER C1608 JB 1H 472K-T | T | 43.5/43.1 |
| C829 | 4030009500 | S.CER C1608 CH 1H 0R5B-T | T | 37.9/42.9 |
| C830 | 4030006860 | S.CER C1608 JB 1H 102K-T | T | 47.9/52.8 |
| C831 | 4030006880 | S.CER C1608 JB 1H 472K-T | T | 46.4/52.8 |
| C832 | 4510008500 | S.ELE EEE1CA101WP | T | 49.3/57.6 |
| C833 | 4510008540 | S.ELE EEE1CA100SR | T | 40.3/58 |
| C842 | 4030006880 | S.CER C1608 JB 1H 472K-T | T | 39.4/35 |
| C843 | 4030006860 | S.CER C1608 JB 1H 102K-T | T | 23.8/34.3 |
| C844 | 4030006880 | S.CER C1608 JB 1H 472K-T | T | 24.5/32.4 |
| C845 | 4510008520 | S.ELE EEE1CA470SP | T | 17.7/35.3 |
| C846 | 4030006880 | S.CER C1608 JB 1H 472K-T | T | 38.4/31.3 |
| C847 | 4030006880 | S.CER C1608 JB 1H 472K-T | T | 30.3/36.1 |
| C848 | 4030006880 | S.CER C1608 JB 1H 472K-T | T | 30.3/38.3 |
| C849 | 4030006880 | S.CER C1608 JB 1H 472K-T | T | 27/40 |
| C850 | 4030006880 | S.CER C1608 JB 1H 472K-T | T | 30.3/39.7 |
| C851 | 4030006880 | S.CER C1608 JB 1H 472K-T | T | 25.1/42.3 |
| C852 | 4030007120 | S.CER C1608 CH 1H 820J-T | T | 30/44.2 |
| C853 | 4030007070 | S.CER C1608 CH 1H 330J-T | T | 24.4/46.8 |
| C854 | 4030007140 | S.CER C1608 CH 1H 121J-T | T | 30/45.8 |
| C855 | 4030007020 | S.CER C1608 CH 1H 120J-T | T | 30.1/48.1 |
| C856 | 4030007090 | S.CER C1608 CH 1H 470J-T | T | 30.2/50.4 |
| C862 | 4030006880 | S.CER C1608 JB 1H 472K-T | T | 60.4/34.5 |
| C911 | 4030008680 | S.CER C2012 JF 1C 105Z-T | T | 92.4/112.7 |
| C912 | 4030008680 | S.CER C2012 JF 1C 105Z-T | T | 92.4/109 |
| C913 | 4030008680 | S.CER C2012 JF 1C 105Z-T | T | 92.4/105.5 |
| C914 | 4030008680 | S.CER C2012 JF 1C 105Z-T | T | 96.8/115.2 |
| C915 | 4030008680 | S.CER C2012 JF 1C 105Z-T | T | 101.5/114.1 |
| C916 | 4030011600 | S.CER C1608 JB 1E 104K-T | T | 108.7/116.4 |
| C917 | 4030011600 | S.CER C1608 JB 1E 104K-T | B | 108.2/115.9 |
| C918 | 4030011600 | S.CER C1608 JB 1E 104K-T | B | 91.3/112.6 |

M.=Mounted side (T: Mounted on the Top side, B: Mounted on the Bottom side)
S.=Surface mount

## [SCOPE UNIT]

| REF NO. | ORDER NO. | DESCRIPTION | | M. | H/V LOCATION |
|---|---|---|---|---|---|
| J1 | 6510007020 | CNR | TMP-J01X-V6 | | |
| J2 | 6510007020 | CNR | TMP-J01X-V6 | | |
| J3 | 6510007020 | CNR | TMP-J01X-V6 | | |
| J4 | 6510020001 | S.CNR | 52808-3071 (3090) | T | 127.9/41.5 |
| J11 | 6510007020 | CNR | TMP-J01X-V6 | | |
| J901 | 6510023720 | CNR | LGY6501-0600C | | |
| J902 | 6510023120 | CNR | CD6109SA1J0 <CVI> | | |
| J903 | 6510024040 | CNR | TM11R-5M2-88-LP | | |
| J904 | 6510024032 | CNR | UBA-4R-D10T-4D (LF) (SN) | | |
| J905 | 6450001941 | CNR | KEY-15S-2A3A (LF) (SN) | | |
| J906 | 6510019971 | S.CNR | 52808-1071 | T | 129/97.7 |
| J907 | 6510020251 | S.CNR | B9B-PH-SM4-TB (LF) (SN) | T | 50.7/105.2 |
| J908 | 6510022311 | S.CNR | B5B-PH-SM4-TB (LF) (SN) | T | 88.7/110.1 |
| J909 | 6510003471 | CNR | B11B-EH-S (LF) (SN) | | |
| J910 | 6510019421 | S.CNR | B8B-ZR-SM4-TF (LF) (SN) | T | 109.6/104.7 |
| DS901 | 5040002930 | S.LED | SML-512MW T86 | T | 57.1/115.2 |
| DS902 | 5040002930 | S.LED | SML-512MW T86 | T | 46/115.1 |
| EP901 | 6910012350 | S.BEA | MMZ1608Y 102BT | B | 131.1/119.6 |
| EP902 | 6910012350 | S.BEA | MMZ1608Y 102BT | B | 122.5/122.7 |
| EP903 | 6910012350 | S.BEA | MMZ1608Y 102BT | T | 81.3/114.1 |
| EP904 | 6910012350 | S.BEA | MMZ1608Y 102BT | T | 82.6/114.1 |
| EP905 | 6910012350 | S.BEA | MMZ1608Y 102BT | B | 79.7/113.7 |
| EP906 | 6910012350 | S.BEA | MMZ1608Y 102BT | T | 81.9/110.1 |
| EP907 | 6910012350 | S.BEA | MMZ1608Y 102BT | B | 83.8/111.5 |
| EP908 | 6910012350 | S.BEA | MMZ1608Y 102BT | B | 85.1/111.5 |

## [LOGIC UNIT]

| REF NO. | ORDER NO. | DESCRIPTION | | M. | H/V LOCATION |
|---|---|---|---|---|---|
| IC1 | 1130014630 | S.IC | MT48LC16M16A2P IT | B | 59.3/91.9 |
| IC2 | 1130014630 | S.IC | MT48LC16M16A2P IT | T | 59.3/99 |
| IC51 | 1130011591 | S.IC | IDT70V24L15PFG | B | 95.5/56 |
| IC52 | 1140009781 | S.IC | XC9572XL-10TQG100C | B | 116.5/56 |
| IC53 | 1110005821 | S.IC | R3112N281A-TR-F | T | 142.2/100.9 |
| IC54 | 1130007431 | S.IC | TC7S14FU (TE85R,F) | T | 146.5/100.6 |
| IC55 | 1130008041 | S.IC | TC7SH04FU (TE85L,JF) | T | 97.9/34.4 |
| IC56 | 1130010111 | S.IC | TC7WH04FU (TE12L,F) | B | 35/25.1 |
| IC101 | 1130011010 | S.IC | SN74CBTLV3257PWR <ACE> | T | 25.2/75.3 |
| IC102 | 1130006441 | S.IC | TC7S08F (TE85R,F) | T | 62/39 |
| IC103 | 1140011561 | S.IC | HD6417751RBP200V | T | 53.5/64.9 |
| IC104 | 1130008361 | S.IC | TC7SHU04FU (TE85L,JF) | T | 8.1/60.8 |
| IC105 | 1130012241 | S.IC | CY2292FXC (SX-2590J) | T | 12.6/69 |
| IC106 | 1130011110 | S.IC | TC74VCX04FT (EL) | T | 10/77.1 |
| IC201 | 1130014630 | S.IC | MT48LC16M16A2P IT | B | 128/77.3 |
| IC202 | 1130014630 | S.IC | MT48LC16M16A2P IT | B | 128.1/95.5 |
| IC203 | 1140011571 | S.IC | HD64404BTDV | T | 97.4/78.4 |
| IC204 | 1140011581 | S.IC | ADV7123KSTZ50 | T | 207.1/29.6 |
| IC205 | 1130011941 | S.IC | TC7SZ04F (TE85L,F) | T | 195.9/26.4 |
| IC206 | 1130012150 | S.IC | SN74ACT04PWR | T | 196/19.9 |
| IC207 | 1130005721 | S.IC | TC7W04F (TE12L,F) | B | 212.2/38.2 |
| IC208 | 1130014080 | S.IC | BD6517F-E2 | B | 219.1/39.2 |
| IC209 | 1190001920 | S.IC | AK5355-VT-E2 | B | 109.8/22.9 |
| IC210 | 1190001920 | S.IC | AK5355-VT-E2 | B | 120.7/22.9 |
| IC211 | 1190001910 | S.IC | AK4384-VT-E2 | B | 131.3/32.6 |
| IC212 | 1190001910 | S.IC | AK4384-VT-E2 | B | 119.1/33.4 |
| IC401 | 1130010970 | S.IC | PCI1410APGE | B | 23.5/48.5 |
| IC402 | 1130011960 | S.IC | TPS2211AIDBR | B | 21.8/31.2 |
| IC403 | 1130009570 | S.IC | BR93LC46F-WE2 | T | 24.2/67.3 |
| IC404 | 1130010990 | S.IC | RTL8139C | B | 23/76.5 |
| IC601 | 1130008041 | S.IC | TC7SH04FU (TE85L,JF) | B | 169.3/55.8 |
| IC602 | 1130008711 | S.IC | TC7SET04FU (T5L,JF) | B | 169.3/53.3 |
| IC603 | 1110004770 | S.IC | BU9480F-E2 | T | 176/57 |
| IC604 | 1140011590 | S.IC | HD64F2377VFQ33V | B | 87/30.5 |
| IC605 | 1140009781 | S.IC | XC9572XL-10TQG100C | B | 141/57 |
| IC607 | 1130006441 | S.IC | TC7S08F (TE85R,F) | B | 59.6/22.6 |
| IC608 | 1130006441 | S.IC | TC7S08F (TE85R,F) | B | 63.3/22.6 |
| IC609 | 1130005252 | S.IC | TC74HC08AF (EL,F) | B | 60/29.8 |
| IC610 | 1140008650 | S.IC | HN58X2464TI | B | 54/37.4 |
| IC801 | 1180002020 | S.REG | BA033FP-E2 | B | 144.2/112.5 |
| IC802 | 1180001541 | S.IC | TA78L08F (TE12L,F) | T | 131.1/111.6 |
| IC821 | 1110002700 | S.IC | NJM2904M-TE1-#FMZB | B | 16.9/105 |
| IC851 | 1110003870 | S.IC | NJM2058M-TE1 | B | 186.3/56.1 |
| IC852 | 1110003870 | S.IC | NJM2058M-TE1 | B | 135.5/12.6 |
| IC853 | 1110003870 | S.IC | NJM2058M-TE1 | B | 114.5/10.1 |
| IC854 | 1130005721 | S.IC | TC7W04F (TE12L,F) | B | 161.4/40.6 |
| Q601 | 1530002060 | S.TR | 2SC4081 T106 R | B | 173.3/53.3 |
| Q602 | 1510000510 | S.TR | 2SA1576A T106R | B | 173.2/57.2 |
| Q802 | 1530002060 | S.TR | 2SC4081 T106 R | T | 159.1/70.3 |
| Q803 | 1540000441 | S.TR | 2SD1619T-TD-E | B | 160.1/70.9 |
| Q804 | 1540000441 | S.TR | 2SD1619T-TD-E | B | 166.7/70.8 |
| Q805 | 1530002060 | S.TR | 2SC4081 T106 R | T | 165.7/70.3 |
| Q806 | 1540000441 | S.TR | 2SD1619T-TD-E | B | 173.3/70.8 |
| Q807 | 1530002060 | S.TR | 2SC4081 T106 R | T | 172.3/70.3 |
| Q808 | 1590001330 | S.TR | DTA114EUA T106 | B | 157.7/30.1 |
| Q809 | 1590001330 | S.TR | DTA114EUA T106 | B | 157.7/27.5 |
| Q810 | 1540000550 | S.TR | 2SD1664 T100Q | T | 160.2/78 |
| Q821 | 1520000651 | S.TR | 2SB1201S-TL-E | B | 28.9/108.4 |
| Q822 | 1530002060 | S.TR | 2SC4081 T106 R | B | 25.5/103.6 |
| Q901 | 1590001960 | S.TR | XP4311 (TX) | B | 187.9/88.3 |
| Q902 | 1590001960 | S.TR | XP4311 (TX) | B | 188.9/79.7 |
| Q903 | 1590001960 | S.TR | XP4311 (TX) | B | 193.9/88.3 |
| Q904 | 1590001960 | S.TR | XP4311 (TX) | B | 192.9/79.7 |
| D51 | 1750000550 | S.DIO | 1SS355 TE-17 | T | 126.1/48.7 |
| D52 | 1750000550 | S.DIO | 1SS355 TE-17 | T | 126.1/50.5 |
| D53 | 1750000550 | S.DIO | 1SS355 TE-17 | T | 126.1/52.3 |
| D54 | 1750000550 | S.DIO | 1SS355 TE-17 | T | 126.1/54.1 |
| D55 | 1750000550 | S.DIO | 1SS355 TE-17 | T | 124.7/55.9 |
| D56 | 1750000550 | S.DIO | 1SS355 TE-17 | T | 124.7/57.7 |
| D57 | 1750000550 | S.DIO | 1SS355 TE-17 | T | 124.7/59.5 |
| D58 | 1750000550 | S.DIO | 1SS355 TE-17 | T | 124.7/61.3 |
| D59 | 1750000550 | S.DIO | 1SS355 TE-17 | T | 124.7/63.1 |
| D60 | 1750000550 | S.DIO | 1SS355 TE-17 | T | 130.1/48.7 |
| D61 | 1750000550 | S.DIO | 1SS355 TE-17 | T | 130.1/50.5 |
| D62 | 1750000550 | S.DIO | 1SS355 TE-17 | T | 130.1/52.3 |
| D65 | 1750000550 | S.DIO | 1SS355 TE-17 | T | 128.9/57.7 |
| D66 | 1750000550 | S.DIO | 1SS355 TE-17 | T | 128.9/59.5 |
| D67 | 1750000550 | S.DIO | 1SS355 TE-17 | T | 128.9/61.3 |
| D68 | 1750000550 | S.DIO | 1SS355 TE-17 | T | 128.9/63.1 |
| D201 | 1790000980 | S.DIO | MA742 (TX) | B | 214.6/32.4 |
| D202 | 1790000980 | S.DIO | MA742 (TX) | B | 214.6/29.4 |
| D203 | 1790000980 | S.DIO | MA742 (TX) | B | 214.6/26.4 |
| D204 | 1790000980 | S.DIO | MA742 (TX) | T | 201.5/16.9 |
| D205 | 1790000980 | S.DIO | MA742 (TX) | T | 201.5/19.8 |
| D206 | 1790000980 | S.DIO | MA742 (TX) | B | 218/7.4 |
| D207 | 1790000980 | S.DIO | MA742 (TX) | B | 220.9/7.4 |
| D208 | 1790000980 | S.DIO | MA742 (TX) | B | 228/7.4 |
| D209 | 1790000980 | S.DIO | MA742 (TX) | B | 230.8/7.4 |
| D601 | 1750000550 | S.DIO | 1SS355 TE-17 | B | 175.5/52.5 |
| D801 | 1750000370 | S.DIO | DA221 TL | B | 159.1/66.5 |
| D802 | 1750000370 | S.DIO | DA221 TL | B | 165.7/66.5 |
| D803 | 1750000370 | S.DIO | DA221 TL | B | 172.3/66.5 |
| D804 | 1750000271 | S.DIO | 1SS301 (TE85L,F) | B | 170/64.1 |
| D805 | 1790001611 | S.DIO | 1SS385 (TE85L,F) | B | 157.3/38.2 |
| D806 | 1790001611 | S.DIO | 1SS385 (TE85L,F) | B | 157.3/40.3 |
| D821 | 1730002340 | S.ZEN | MA8047-M (TX) | B | 22.4/104.6 |
| D851 | 1750000550 | S.DIO | 1SS355 TE-17 | B | 180.9/50.2 |
| D852 | 1750000550 | S.DIO | 1SS355 TE-17 | B | 191.8/50 |
| D853 | 1790000980 | S.DIO | MA742 (TX) | B | 122/18.5 |
| D854 | 1790000980 | S.DIO | MA742 (TX) | B | 119.5/18.5 |

M.=Mounted side (T: Mounted on the Top side, B: Mounted on the Bottom side)
S.=Surface mount

## [LOGIC UNIT]

| REF NO. | ORDER NO. | DESCRIPTION | | M. | H/V LOCATION |
|---|---|---|---|---|---|
| D855 | 1790000980 | S.DIO | MA742 (TX) | B | 107/18.4 |
| D856 | 1790000980 | S.DIO | MA742 (TX) | B | 104.5/18.4 |
| D857 | 1750000550 | S.DIO | 1SS355 TE-17 | B | 189.9/61.9 |
| D858 | 1750000550 | S.DIO | 1SS355 TE-17 | B | 182.2/61.9 |
| D860 | 1790000980 | S.DIO | MA742 (TX) | T | 97.5/26.3 |
| D861 | 1790000980 | S.DIO | MA742 (TX) | T | 97.5/31.3 |
| D862 | 1790000980 | S.DIO | MA742 (TX) | T | 97.9/23.7 |
| D863 | 1790000980 | S.DIO | MA742 (TX) | T | 97.5/28.8 |
| D864 | 1790000980 | S.DIO | MA742 (TX) | T | 100.4/23.7 |
| D865 | 1790000980 | S.DIO | MA742 (TX) | T | 94.3/24.7 |
| D866 | 1790000980 | S.DIO | MA742 (TX) | T | 94.3/27.2 |
| D867 | 1790000980 | S.DIO | MA742 (TX) | T | 102.9/23.7 |
| D901 | 1790000980 | S.DIO | MA742 (TX) | T | 188/31.2 |
| X101 | 6050011610 | S.XTL | CR-751 (25.000 MHz) | T | 2.9/63.1 |
| X201 | 6050010680 | S.XTL | CR-628 (24.576 MHz) | T | 103.9/94.6 |
| X202 | 6050011910 | S.XTL | CR-780 (48 MHz) | T | 100.2/60.6 |
| X601 | 6050011810 | S.XTL | CR-755 (15.9744 MHz) | T | 81.9/13.6 |
| L203 | 6200002631 | S.COL | NLV25T-R10J | B | 222.2/32.6 |
| L204 | 6200002631 | S.COL | NLV25T-R10J | B | 222.2/29.6 |
| L205 | 6200002631 | S.COL | NLV25T-R10J | B | 222.2/26.6 |
| L801 | 6200003261 | S.COL | NLV32T-101J | B | 66.9/123.5 |
| L803 | 6180003321 | S.COL | SLF6028T-150M1R0-PF | B | 88.7/112.9 |
| L804 | 6180003321 | S.COL | SLF6028T-150M1R0-PF | B | 102.5/112.9 |
| L805 | 6180003321 | S.COL | SLF6028T-150M1R0-PF | B | 95.8/112.9 |
| L806 | 6180003321 | S.COL | SLF6028T-150M1R0-PF | B | 109/112.9 |
| L807 | 6180003321 | S.COL | SLF6028T-150M1R0-PF | B | 115.7/112.9 |
| L808 | 6200003590 | S.COL | EXCCL3225U1 | T | 92.1/115.8 |
| L809 | 6200003590 | S.COL | EXCCL3225U1 | B | 93.1/123.1 |
| L810 | 6200003590 | S.COL | EXCCL3225U1 | B | 87.7/123.2 |
| L811 | 6200001831 | S.COL | NLV32T-100J | B | 127.9/22.6 |
| L821 | 6200003590 | S.COL | EXCCL3225U1 | B | 121.2/112.7 |
| L822 | 6200003590 | S.COL | EXCCL3225U1 | T | 125/115.8 |
| L823 | 6200009790 | S.COL | BLM31PG121SN1 | T | 18.2/25.6 |
| L824 | 6200003590 | S.COL | EXCCL3225U1 | B | 130.1/115.5 |
| L825 | 6200003590 | S.COL | EXCCL3225U1 | B | 133.6/116.1 |
| L826 | 6180003321 | S.COL | SLF6028T-150M1R0-PF | B | 179.9/15.5 |
| L827 | 6200003590 | S.COL | EXCCL3225U1 | T | 120.4/115.8 |
| L832 | 6200003590 | S.COL | EXCCL3225U1 | B | 80.1/122.1 |
| L833 | 6200003590 | S.COL | EXCCL3225U1 | B | 75.6/122.1 |
| L834 | 6200003590 | S.COL | EXCCL3225U1 | B | 125.6/112.2 |
| L835 | 6200003590 | S.COL | EXCCL3225U1 | B | 125.6/115.3 |
| L901 | 6200003590 | S.COL | EXCCL3225U1 | B | 214.4/74.4 |
| L902 | 6200003590 | S.COL | EXCCL3225U1 | B | 214.4/78.2 |
| L903 | 6200003590 | S.COL | EXCCL3225U1 | B | 206.5/80 |
| L904 | 6200003590 | S.COL | EXCCL3225U1 | B | 214.4/81.2 |
| L905 | 6200003590 | S.COL | EXCCL3225U1 | B | 21/114.8 |
| L906 | 6200003590 | S.COL | EXCCL3225U1 | B | 24/114.8 |
| L907 | 6200003590 | S.COL | EXCCL3225U1 | B | 27/114.8 |
| L908 | 6200003590 | S.COL | EXCCL3225U1 | B | 30/114.8 |
| L909 | 6200003261 | S.COL | NLV32T-101J | B | 181.3/82.6 |
| L910 | 6200003590 | S.COL | EXCCL3225U1 | B | 195.7/82.4 |
| L911 | 6200003590 | S.COL | EXCCL3225U1 | B | 221.8/76.5 |
| L912 | 6200003590 | S.COL | EXCCL3225U1 | B | 230.4/76.8 |
| L913 | 6200003590 | S.COL | EXCCL3225U1 | B | 230.4/63 |
| L914 | 6200003590 | S.COL | EXCCL3225U1 | B | 221.8/64 |
| L915 | 6200003590 | S.COL | EXCCL3225U1 | B | 230.4/66 |
| L916 | 6200003590 | S.COL | EXCCL3225U1 | B | 221.8/67 |
| L917 | 6200003590 | S.COL | EXCCL3225U1 | T | 162.2/21.7 |
| L918 | 6200003590 | S.COL | EXCCL3225U1 | T | 186.4/18.7 |
| L919 | 6200003590 | S.COL | EXCCL3225U1 | T | 186.4/22.4 |
| L920 | 6200003590 | S.COL | EXCCL3225U1 | T | 162.3/24.7 |
| L1101 | 6200003590 | S.COL | EXCCL3225U1 | T | 40.5/25.8 |
| R1 | 7030003520 | S.RES | ERJ3GEYJ 472 V (4.7 k) | T | 91.5/101.3 |
| R51 | 7030003520 | S.RES | ERJ3GEYJ 472 V (4.7 k) | T | 143/76.8 |
| R52 | 7030003560 | S.RES | ERJ3GEYJ 103 V (10 k) | T | 138.6/100.6 |
| R55 | 7030003440 | S.RES | ERJ3GEYJ 102 V (1 k) | B | 126.4/51.5 |
| R56 | 7030003440 | S.RES | ERJ3GEYJ 102 V (1 k) | B | 123.5/46.1 |
| R57 | 7030003680 | S.RES | ERJ3GEYJ 104 V (100 k) | B | 31.3/25 |
| R58 | 7030003680 | S.RES | ERJ3GEYJ 104 V (100 k) | B | 30/25 |
| R101 | 7030003680 | S.RES | ERJ3GEYJ 104 V (100 k) | T | 19.3/74.8 |
| R102 | 7030003520 | S.RES | ERJ3GEYJ 472 V (4.7 k) | T | 31/73.7 |
| R103 | 7030003520 | S.RES | ERJ3GEYJ 472 V (4.7 k) | T | 31/75.7 |
| R104 | 7030003520 | S.RES | ERJ3GEYJ 472 V (4.7 k) | T | 19.3/73.5 |
| R105 | 7030003520 | S.RES | ERJ3GEYJ 472 V (4.7 k) | T | 19.3/76.1 |
| R106 | 7030003560 | S.RES | ERJ3GEYJ 103 V (10 k) | B | 54.6/60.1 |
| R107 | 7030003560 | S.RES | ERJ3GEYJ 103 V (10 k) | B | 49.4/60.1 |
| R108 | 7030003560 | S.RES | ERJ3GEYJ 103 V (10 k) | B | 48.4/49.5 |
| R109 | 7030003560 | S.RES | ERJ3GEYJ 103 V (10 k) | B | 52/60.1 |
| R110 | 7030003560 | S.RES | ERJ3GEYJ 103 V (10 k) | T | 54.9/49.3 |
| R111 | 7030003560 | S.RES | ERJ3GEYJ 103 V (10 k) | B | 54.6/58.8 |
| R112 | 7030003560 | S.RES | ERJ3GEYJ 103 V (10 k) | T | 53.6/49.3 |
| R113 | 7030003560 | S.RES | ERJ3GEYJ 103 V (10 k) | B | 49.4/58.8 |
| R114 | 7030003560 | S.RES | ERJ3GEYJ 103 V (10 k) | B | 45.8/49.5 |
| R115 | 7030003560 | S.RES | ERJ3GEYJ 103 V (10 k) | B | 49.4/62.7 |
| R116 | 7030003560 | S.RES | ERJ3GEYJ 103 V (10 k) | B | 49.4/61.4 |
| R117 | 7030003260 | S.RES | ERJ3GEYJ 330 V (33) | B | 43.2/49.5 |
| R118 | 7030003560 | S.RES | ERJ3GEYJ 103 V (10 k) | B | 49.4/64 |
| R119 | 7030003560 | S.RES | ERJ3GEYJ 103 V (10 k) | B | 41.4/50 |
| R120 | 7030003560 | S.RES | ERJ3GEYJ 103 V (10 k) | B | 49.4/65.3 |
| R121 | 7030003560 | S.RES | ERJ3GEYJ 103 V (10 k) | B | 43.2/46.9 |
| R122 | 7030003560 | S.RES | ERJ3GEYJ 103 V (10 k) | B | 39.3/56 |
| R123 | 7030003560 | S.RES | ERJ3GEYJ 103 V (10 k) | B | 43.2/45.6 |
| R124 | 7030003680 | S.RES | ERJ3GEYJ 104 V (100 k) | T | 51/49.3 |
| R125 | 7030003520 | S.RES | ERJ3GEYJ 472 V (4.7 k) | T | 52.3/49.3 |
| R126 | 7030003560 | S.RES | ERJ3GEYJ 103 V (10 k) | B | 52/61.4 |
| R127 | 7030003560 | S.RES | ERJ3GEYJ 103 V (10 k) | B | 52/58.8 |
| R128 | 7030003560 | S.RES | ERJ3GEYJ 103 V (10 k) | T | 53.6/45.7 |
| R129 | 7030003560 | S.RES | ERJ3GEYJ 103 V (10 k) | T | 54.9/46.7 |

## [LOGIC UNIT]

| REF NO. | ORDER NO. | DESCRIPTION | | M. | H/V LOCATION |
|---|---|---|---|---|---|
| R130 | 7030003560 | S.RES | ERJ3GEYJ 103 V (10 k) | B | 56.4/50.5 |
| R131 | 7030003560 | S.RES | ERJ3GEYJ 103 V (10 k) | B | 54.6/61.4 |
| R132 | 7030003560 | S.RES | ERJ3GEYJ 103 V (10 k) | T | 56.2/49.3 |
| R133 | 7030003560 | S.RES | ERJ3GEYJ 103 V (10 k) | T | 56.2/46.7 |
| R134 | 7030003200 | S.RES | ERJ3GEYJ 100 V (10) | B | 57.2/58.8 |
| R135 | 7030003200 | S.RES | ERJ3GEYJ 100 V (10) | B | 57.2/60.1 |
| R136 | 7030003200 | S.RES | ERJ3GEYJ 100 V (10) | B | 70.1/50.5 |
| R137 | 7030004050 | S.RES | ERJ3GEYJ 1R0 V (1) | B | 49.4/68 |
| R138 | 7030003560 | S.RES | ERJ3GEYJ 103 V (10 k) | B | 49.4/69.3 |
| R139 | 7030003560 | S.RES | ERJ3GEYJ 103 V (10 k) | B | 49.7/78 |
| R140 | 7410000990 | S.ARY | EXB-V8V 470JV (47) | T | 47/82.7 |
| R141 | 7410000990 | S.ARY | EXB-V8V 470JV (47) | T | 43.3/82.7 |
| R142 | 7410000990 | S.ARY | EXB-V8V 470JV (47) | T | 54.4/82.7 |
| R143 | 7410000990 | S.ARY | EXB-V8V 470JV (47) | T | 61.8/82.7 |
| R144 | 7410000990 | S.ARY | EXB-V8V 470JV (47) | T | 50.7/82.7 |
| R145 | 7410000990 | S.ARY | EXB-V8V 470JV (47) | T | 58.1/82.7 |
| R146 | 7030003280 | S.RES | ERJ3GEYJ 470 V (47) | T | 70/81.8 |
| R147 | 7030003280 | S.RES | ERJ3GEYJ 470 V (47) | T | 70/80.5 |
| R148 | 7410000990 | S.ARY | EXB-V8V 470JV (47) | T | 65.5/82.7 |
| R149 | 7410000990 | S.ARY | EXB-V8V 470JV (47) | T | 70/54.9 |
| R150 | 7410000990 | S.ARY | EXB-V8V 470JV (47) | T | 70/58.6 |
| R151 | 7410000990 | S.ARY | EXB-V8V 470JV (47) | T | 70/62.3 |
| R152 | 7410000990 | S.ARY | EXB-V8V 470JV (47) | T | 70/66 |
| R153 | 7030003200 | S.RES | ERJ3GEYJ 100 V (10) | T | 70/83.1 |
| R154 | 7410000990 | S.ARY | EXB-V8V 470JV (47) | T | 70/69.7 |
| R155 | 7410000990 | S.ARY | EXB-V8V 470JV (47) | T | 70/73.4 |
| R156 | 7410000990 | S.ARY | EXB-V8V 470JV (47) | T | 70/78 |
| R157 | 7410000800 | S.ARY | EXB-V8V 103JV (10 k) | T | 77.4/38.7 |
| R158 | 7030003560 | S.RES | ERJ3GEYJ 103 V (10 k) | T | 77.4/36.2 |
| R159 | 7030003560 | S.RES | ERJ3GEYJ 103 V (10 k) | T | 64.3/41.3 |
| R161 | 7030003250 | S.RES | ERJ3GEYJ 270 V (27) | T | 9.1/64.6 |
| R162 | 7030003800 | S.RES | ERJ3GEYJ 105 V (1 M) | T | 6.2/59.5 |
| R163 | 7030003320 | S.RES | ERJ3GEYJ 101 V (100) | T | 12.5/73.7 |
| R164 | 7030003250 | S.RES | ERJ3GEYJ 270 V (27) | B | 10.8/68.3 |
| R165 | 7030003860 | S.RES | ERJ3GE JPW V | T | 4.3/76.8 |
| R166 | 7030003860 | S.RES | ERJ3GE JPW V | T | 8.5/81.2 |
| R167 | 7030003860 | S.RES | ERJ3GE JPW V | T | 14.9/78.1 |
| R170 | 7030003600 | S.RES | ERJ3GEYJ 223 V (22 k) | B | 38.5/38.6 |
| R171 | 7030003600 | S.RES | ERJ3GEYJ 223 V (22 k) | B | 35.3/75.2 |
| R172 | 7030003600 | S.RES | ERJ3GEYJ 223 V (22 k) | B | 35.3/76.5 |
| R173 | 7030003600 | S.RES | ERJ3GEYJ 223 V (22 k) | B | 39.4/78.2 |
| R174 | 7030003600 | S.RES | ERJ3GEYJ 223 V (22 k) | B | 37.4/79 |
| R175 | 7030003600 | S.RES | ERJ3GEYJ 223 V (22 k) | B | 37.4/80.3 |
| R176 | 7030003600 | S.RES | ERJ3GEYJ 223 V (22 k) | B | 35.3/73.9 |
| R201 | 7030003560 | S.RES | ERJ3GEYJ 103 V (10 k) | T | 114.5/85.1 |
| R202 | 7030003560 | S.RES | ERJ3GEYJ 103 V (10 k) | T | 111.3/85.1 |
| R203 | 7030003560 | S.RES | ERJ3GEYJ 103 V (10 k) | T | 118.4/86.4 |
| R204 | 7030003560 | S.RES | ERJ3GEYJ 103 V (10 k) | T | 118.4/85.1 |
| R205 | 7030003560 | S.RES | ERJ3GEYJ 103 V (10 k) | T | 114.5/82.5 |
| R206 | 7030003560 | S.RES | ERJ3GEYJ 103 V (10 k) | T | 111.3/83.8 |
| R207 | 7030003560 | S.RES | ERJ3GEYJ 103 V (10 k) | T | 118.4/83.8 |
| R208 | 7030003560 | S.RES | ERJ3GEYJ 103 V (10 k) | T | 118.4/82.5 |
| R209 | 7030003560 | S.RES | ERJ3GEYJ 103 V (10 k) | T | 114.5/83.8 |
| R212 | 7030003640 | S.RES | ERJ3GEYJ 473 V (47 k) | T | 83.7/82 |
| R213 | 7030003640 | S.RES | ERJ3GEYJ 473 V (47 k) | T | 83.7/83.3 |
| R218 | 7030003520 | S.RES | ERJ3GEYJ 472 V (4.7 k) | T | 116.9/49 |
| R219 | 7030003520 | S.RES | ERJ3GEYJ 472 V (4.7 k) | T | 83.7/79.4 |
| R220 | 7030003520 | S.RES | ERJ3GEYJ 472 V (4.7 k) | B | 94.1/74.4 |
| R221 | 7030003560 | S.RES | ERJ3GEYJ 103 V (10 k) | T | 83.7/73.7 |
| R225 | 7030003560 | S.RES | ERJ3GEYJ 103 V (10 k) | B | 94.1/79.6 |
| R226 | 7030003560 | S.RES | ERJ3GEYJ 103 V (10 k) | B | 94.1/80.9 |
| R227 | 7030003560 | S.RES | ERJ3GEYJ 103 V (10 k) | T | 92/98.2 |
| R228 | 7030003560 | S.RES | ERJ3GEYJ 103 V (10 k) | T | 92/95.1 |
| R229 | 7030003560 | S.RES | ERJ3GEYJ 103 V (10 k) | T | 91.2/92 |
| R230 | 7030003560 | S.RES | ERJ3GEYJ 103 V (10 k) | T | 93.3/95.1 |
| R231 | 7030003560 | S.RES | ERJ3GEYJ 103 V (10 k) | T | 92.5/92.2 |
| R232 | 7030003560 | S.RES | ERJ3GEYJ 103 V (10 k) | B | 93.4/83.2 |
| R233 | 7030003560 | S.RES | ERJ3GEYJ 103 V (10 k) | T | 93.3/98.2 |
| R234 | 7030003560 | S.RES | ERJ3GEYJ 103 V (10 k) | T | 93.8/92.2 |
| R235 | 7030003560 | S.RES | ERJ3GEYJ 103 V (10 k) | T | 94.6/95.1 |
| R236 | 7030003560 | S.RES | ERJ3GEYJ 103 V (10 k) | T | 94.6/98.2 |
| R237 | 7030003560 | S.RES | ERJ3GEYJ 103 V (10 k) | B | 94.7/83.2 |
| R238 | 7030003560 | S.RES | ERJ3GEYJ 103 V (10 k) | T | 95.1/92.2 |
| R239 | 7030003560 | S.RES | ERJ3GEYJ 103 V (10 k) | T | 95.9/95.1 |
| R240 | 7030003560 | S.RES | ERJ3GEYJ 103 V (10 k) | T | 95.9/98.2 |
| R241 | 7030003560 | S.RES | ERJ3GEYJ 103 V (10 k) | B | 97/89.4 |
| R242 | 7030003560 | S.RES | ERJ3GEYJ 103 V (10 k) | T | 96.6/92 |
| R243 | 7030003560 | S.RES | ERJ3GEYJ 103 V (10 k) | B | 96/83.2 |
| R244 | 7030003560 | S.RES | ERJ3GEYJ 103 V (10 k) | T | 96.6/64.7 |
| R245 | 7030003560 | S.RES | ERJ3GEYJ 103 V (10 k) | T | 90.1/64.7 |
| R246 | 7030003560 | S.RES | ERJ3GEYJ 103 V (10 k) | T | 88.8/61.6 |
| R247 | 7030003560 | S.RES | ERJ3GEYJ 103 V (10 k) | B | 96.7/74.4 |
| R248 | 7030003560 | S.RES | ERJ3GEYJ 103 V (10 k) | T | 91.4/64.7 |
| R249 | 7030003560 | S.RES | ERJ3GEYJ 103 V (10 k) | T | 86.2/64.7 |
| R250 | 7030003560 | S.RES | ERJ3GEYJ 103 V (10 k) | T | 87.5/64.7 |
| R251 | 7030003560 | S.RES | ERJ3GEYJ 103 V (10 k) | T | 90.1/61.6 |
| R252 | 7030003560 | S.RES | ERJ3GEYJ 103 V (10 k) | T | 87.5/61.6 |
| R253 | 7030003560 | S.RES | ERJ3GEYJ 103 V (10 k) | T | 83.7/75 |
| R254 | 7030003560 | S.RES | ERJ3GEYJ 103 V (10 k) | T | 88.8/64.7 |
| R255 | 7030003560 | S.RES | ERJ3GEYJ 103 V (10 k) | T | 86.2/61.6 |
| R256 | 7030003560 | S.RES | ERJ3GEYJ 103 V (10 k) | B | 96.7/77 |
| R257 | 7030003560 | S.RES | ERJ3GEYJ 103 V (10 k) | T | 92.7/64.7 |
| R258 | 7030003560 | S.RES | ERJ3GEYJ 103 V (10 k) | B | 96.7/78.3 |
| R259 | 7030003560 | S.RES | ERJ3GEYJ 103 V (10 k) | T | 92.7/61.6 |
| R260 | 7030003560 | S.RES | ERJ3GEYJ 103 V (10 k) | B | 96.7/79.6 |
| R261 | 7030003560 | S.RES | ERJ3GEYJ 103 V (10 k) | T | 94/61.6 |
| R262 | 7030003560 | S.RES | ERJ3GEYJ 103 V (10 k) | B | 96.7/80.9 |
| R263 | 7030003560 | S.RES | ERJ3GEYJ 103 V (10 k) | B | 94/66.6 |
| R264 | 7030003560 | S.RES | ERJ3GEYJ 103 V (10 k) | B | 98/72.6 |
| R265 | 7030003560 | S.RES | ERJ3GEYJ 103 V (10 k) | T | 92.7/59 |
| R266 | 7030003560 | S.RES | ERJ3GEYJ 103 V (10 k) | T | 94/59 |
| R267 | 7030003560 | S.RES | ERJ3GEYJ 103 V (10 k) | T | 95.3/64.7 |
| R268 | 7030003560 | S.RES | ERJ3GEYJ 103 V (10 k) | B | 91.4/66.6 |
| R269 | 7030003560 | S.RES | ERJ3GEYJ 103 V (10 k) | T | 94/64.7 |

M.=Mounted side (T: Mounted on the Top side, B: Mounted on the Bottom side)
S.=Surface mount

## [LOGIC UNIT]

| REF NO. | ORDER NO. | DESCRIPTION | M. | H/V LOCATION |
|---|---|---|---|---|
| R270 | 7030003560 | S.RES ERJ3GEYJ 103 V (10 k) | T | 91.4/61.6 |
| R271 | 7030003560 | S.RES ERJ3GEYJ 103 V (10 k) | T | 91.4/59 |
| R272 | 7030003560 | S.RES ERJ3GEYJ 103 V (10 k) | B | 114.7/71.1 |
| R273 | 7030003560 | S.RES ERJ3GEYJ 103 V (10 k) | T | 114/68.2 |
| R274 | 7030003560 | S.RES ERJ3GEYJ 103 V (10 k) | B | 99.9/79.7 |
| R275 | 7030003560 | S.RES ERJ3GEYJ 103 V (10 k) | T | 111/69.5 |
| R276 | 7030003560 | S.RES ERJ3GEYJ 103 V (10 k) | T | 108.7/64.8 |
| R277 | 7030003560 | S.RES ERJ3GEYJ 103 V (10 k) | T | 114/66.9 |
| R278 | 7030003560 | S.RES ERJ3GEYJ 103 V (10 k) | T | 114/65.6 |
| R279 | 7030003560 | S.RES ERJ3GEYJ 103 V (10 k) | B | 99.9/81 |
| R280 | 7030003560 | S.RES ERJ3GEYJ 103 V (10 k) | T | 114/69.5 |
| R281 | 7030003560 | S.RES ERJ3GEYJ 103 V (10 k) | B | 100.6/75.2 |
| R282 | 7030003560 | S.RES ERJ3GEYJ 103 V (10 k) | B | 99.3/75.2 |
| R283 | 7030003560 | S.RES ERJ3GEYJ 103 V (10 k) | B | 105.6/65.2 |
| R284 | 7030003560 | S.RES ERJ3GEYJ 103 V (10 k) | B | 105.6/66.5 |
| R285 | 7030003560 | S.RES ERJ3GEYJ 103 V (10 k) | B | 99.9/78.4 |
| R286 | 7030003560 | S.RES ERJ3GEYJ 103 V (10 k) | T | 114/64.3 |
| R287 | 7030003560 | S.RES ERJ3GEYJ 103 V (10 k) | T | 103.5/65.6 |
| R288 | 7030003560 | S.RES ERJ3GEYJ 103 V (10 k) | T | 108.7/63.4 |
| R289 | 7030003560 | S.RES ERJ3GEYJ 103 V (10 k) | T | 100.9/65.5 |
| R290 | 7030003560 | S.RES ERJ3GEYJ 103 V (10 k) | B | 99.9/77 |
| R291 | 7030003560 | S.RES ERJ3GEYJ 103 V (10 k) | T | 106.1/65.5 |
| R292 | 7030003560 | S.RES ERJ3GEYJ 103 V (10 k) | B | 94.1/75.7 |
| R293 | 7030003560 | S.RES ERJ3GEYJ 103 V (10 k) | B | 94.1/77 |
| R294 | 7030003560 | S.RES ERJ3GEYJ 103 V (10 k) | B | 94.1/78.3 |
| R295 | 7030003640 | S.RES ERJ3GEYJ 473 V (47 k) | B | 96.7/75.7 |
| R296 | 7030003560 | S.RES ERJ3GEYJ 103 V (10 k) | T | 111.3/87.7 |
| R297 | 7030003560 | S.RES ERJ3GEYJ 103 V (10 k) | T | 111.3/91.6 |
| R298 | 7030003560 | S.RES ERJ3GEYJ 103 V (10 k) | T | 118.4/91.6 |
| R299 | 7030003560 | S.RES ERJ3GEYJ 103 V (10 k) | T | 111.3/90.3 |
| R300 | 7030003560 | S.RES ERJ3GEYJ 103 V (10 k) | T | 114.5/90.3 |
| R301 | 7030003560 | S.RES ERJ3GEYJ 103 V (10 k) | T | 118.4/90.3 |
| R302 | 7030003560 | S.RES ERJ3GEYJ 103 V (10 k) | T | 114.5/91.6 |
| R303 | 7030003560 | S.RES ERJ3GEYJ 103 V (10 k) | T | 118.4/89 |
| R304 | 7030003560 | S.RES ERJ3GEYJ 103 V (10 k) | T | 114.5/89 |
| R305 | 7030003560 | S.RES ERJ3GEYJ 103 V (10 k) | T | 111.3/89 |
| R306 | 7030003560 | S.RES ERJ3GEYJ 103 V (10 k) | T | 111.3/86.4 |
| R307 | 7030003560 | S.RES ERJ3GEYJ 103 V (10 k) | T | 114.5/86.4 |
| R308 | 7030003560 | S.RES ERJ3GEYJ 103 V (10 k) | T | 118.4/87.7 |
| R309 | 7030003560 | S.RES ERJ3GEYJ 103 V (10 k) | T | 114.5/87.7 |
| R310 | 7030003560 | S.RES ERJ3GEYJ 103 V (10 k) | T | 111/68.2 |
| R311 | 7030003560 | S.RES ERJ3GEYJ 103 V (10 k) | B | 116.1/71.1 |
| R313 | 7030003410 | S.RES ERJ3GEYJ 561 V (560) | T | 209.8/36.7 |
| R314 | 7030003340 | S.RES ERJ3GEYJ 151 V (150) | B | 216.8/32.5 |
| R315 | 7030003340 | S.RES ERJ3GEYJ 151 V (150) | B | 218.1/32.5 |
| R316 | 7030003340 | S.RES ERJ3GEYJ 151 V (150) | B | 216.8/29.5 |
| R317 | 7030003340 | S.RES ERJ3GEYJ 151 V (150) | B | 218.1/29.5 |
| R318 | 7030003340 | S.RES ERJ3GEYJ 151 V (150) | B | 216.8/26.5 |
| R319 | 7030003340 | S.RES ERJ3GEYJ 151 V (150) | B | 218.1/26.5 |
| R320 | 7030003240 | S.RES ERJ3GEYJ 220 V (22) | T | 203.9/17.8 |
| R321 | 7030003240 | S.RES ERJ3GEYJ 220 V (22) | T | 203.9/20.7 |
| R322 | 7030003250 | S.RES ERJ3GEYJ 270 V (27) | B | 213.9/7.4 |
| R323 | 7030003250 | S.RES ERJ3GEYJ 270 V (27) | B | 215.9/3.3 |
| R324 | 7030003580 | S.RES ERJ3GEYJ 153 V (15 k) | B | 213.9/6.1 |
| R325 | 7030003580 | S.RES ERJ3GEYJ 153 V (15 k) | B | 215.9/4.6 |
| R326 | 7030003250 | S.RES ERJ3GEYJ 270 V (27) | B | 227.4/4.9 |
| R327 | 7030003250 | S.RES ERJ3GEYJ 270 V (27) | B | 230/4.9 |
| R328 | 7030003580 | S.RES ERJ3GEYJ 153 V (15 k) | B | 228.1/3.1 |
| R329 | 7030003580 | S.RES ERJ3GEYJ 153 V (15 k) | B | 230.7/3.1 |
| R330 | 7030003560 | S.RES ERJ3GEYJ 103 V (10 k) | B | 222.6/38.8 |
| R331 | 7030003560 | S.RES ERJ3GEYJ 103 V (10 k) | B | 223.9/38.8 |
| R332 | 7030003640 | S.RES ERJ3GEYJ 473 V (47 k) | B | 104.6/25.8 |
| R333 | 7030003640 | S.RES ERJ3GEYJ 473 V (47 k) | B | 113.9/19.1 |
| R334 | 7030003640 | S.RES ERJ3GEYJ 473 V (47 k) | B | 110.7/19.5 |
| R335 | 7030003280 | S.RES ERJ3GEYJ 470 V (47) | B | 109.8/26.4 |
| R336 | 7030003640 | S.RES ERJ3GEYJ 473 V (47 k) | B | 115.5/25.8 |
| R337 | 7030003640 | S.RES ERJ3GEYJ 473 V (47 k) | B | 125.1/23.6 |
| R338 | 7030003640 | S.RES ERJ3GEYJ 473 V (47 k) | B | 125.2/20.6 |
| R339 | 7030003280 | S.RES ERJ3GEYJ 470 V (47) | B | 120.1/27.7 |
| R340 | 7030003280 | S.RES ERJ3GEYJ 470 V (47) | B | 130.8/38.1 |
| R341 | 7030003640 | S.RES ERJ3GEYJ 473 V (47 k) | B | 135.7/33.5 |
| R342 | 7030003280 | S.RES ERJ3GEYJ 470 V (47) | B | 121.7/36.9 |
| R343 | 7030003640 | S.RES ERJ3GEYJ 473 V (47 k) | B | 119.5/30 |
| R344 | 7030003520 | S.RES ERJ3GEYJ 472 V (4.7 k) | B | 129.1/29.1 |
| R345 | 7030003520 | S.RES ERJ3GEYJ 472 V (4.7 k) | B | 116.9/30 |
| R350 | 7030003860 | S.RES ERJ3GE JPW V | T | 119.5/49 |
| R351 | 7030003860 | S.RES ERJ3GE JPW V | B | 100.6/83.2 |
| R353 | 7030003860 | S.RES ERJ3GE JPW V | B | 187.5/12.3 |
| R355 | 7030003860 | S.RES ERJ3GE JPW V | B | 187.5/13.6 |
| R356 | 7030003860 | S.RES ERJ3GE JPW V | B | 185.3/9.9 |
| R361 | 7030003320 | S.RES ERJ3GEYJ 101 V (100) | T | 193.5/25.6 |
| R401 | 7030003320 | S.RES ERJ3GEYJ 101 V (100) | B | 39.9/44.9 |
| R403 | 7030003560 | S.RES ERJ3GEYJ 103 V (10 k) | B | 16.5/35.6 |
| R404 | 7030003560 | S.RES ERJ3GEYJ 103 V (10 k) | B | 22.8/35.6 |
| R405 | 7030003560 | S.RES ERJ3GEYJ 103 V (10 k) | B | 7.9/40.8 |
| R406 | 7030003560 | S.RES ERJ3GEYJ 103 V (10 k) | T | 24.3/46.5 |
| R407 | 7030003560 | S.RES ERJ3GEYJ 103 V (10 k) | T | 22.5/47.2 |
| R408 | 7030003560 | S.RES ERJ3GEYJ 103 V (10 k) | T | 28.1/51.8 |
| R409 | 7030003560 | S.RES ERJ3GEYJ 103 V (10 k) | T | 22.9/57 |
| R410 | 7030003560 | S.RES ERJ3GEYJ 103 V (10 k) | T | 20.3/57 |
| R411 | 7030003560 | S.RES ERJ3GEYJ 103 V (10 k) | T | 24.2/57 |
| R412 | 7030003560 | S.RES ERJ3GEYJ 103 V (10 k) | T | 25.5/57 |
| R413 | 7030003560 | S.RES ERJ3GEYJ 103 V (10 k) | T | 26.8/57 |
| R414 | 7030003560 | S.RES ERJ3GEYJ 103 V (10 k) | T | 21.6/57 |
| R415 | 7030003560 | S.RES ERJ3GEYJ 103 V (10 k) | B | 25.6/26.2 |
| R416 | 7030003560 | S.RES ERJ3GEYJ 103 V (10 k) | B | 24.3/26.2 |
| R417 | 7030003560 | S.RES ERJ3GEYJ 103 V (10 k) | B | 23/26.2 |
| R418 | 7030003320 | S.RES ERJ3GEYJ 101 V (100) | B | 36.1/82.5 |
| R419 | 7030003440 | S.RES ERJ3GEYJ 102 V (1 k) | B | 10.4/83.3 |
| R420 | 7030003580 | S.RES ERJ3GEYJ 153 V (15 k) | B | 11/81.5 |
| R421 | 7030003470 | S.RES ERJ3GEYJ 182 V (1.8 k) | B | 12.3/76.4 |
| R422 | 7030003250 | S.RES ERJ3GEYJ 270 V (27) | B | 11.5/74.2 |
| R423 | 7030003560 | S.RES ERJ3GEYJ 103 V (10 k) | B | 14.6/90.2 |
| R424 | 7030003560 | S.RES ERJ3GEYJ 103 V (10 k) | B | 11.5/85.7 |

## [LOGIC UNIT]

| REF NO. | ORDER NO. | DESCRIPTION | M. | H/V LOCATION |
|---|---|---|---|---|
| R425 | 7030003380 | S.RES ERJ3GEYJ 331 V (330) | T | 9.3/96.4 |
| R426 | 7030003380 | S.RES ERJ3GEYJ 331 V (330) | T | 9.3/94.9 |
| R427 | 7030003380 | S.RES ERJ3GEYJ 331 V (330) | T | 9.3/93.1 |
| R428 | 7030003320 | S.RES ERJ3GEYJ 101 V (100) | B | 147.4/21.2 |
| R429 | 7030003320 | S.RES ERJ3GEYJ 101 V (100) | B | 148.7/21.2 |
| R430 | 7030003320 | S.RES ERJ3GEYJ 101 V (100) | B | 151.3/21.2 |
| R431 | 7030003320 | S.RES ERJ3GEYJ 101 V (100) | B | 150/21.2 |
| R432 | 7030003320 | S.RES ERJ3GEYJ 101 V (100) | B | 154.3/15.2 |
| R433 | 7030003320 | S.RES ERJ3GEYJ 101 V (100) | B | 155.6/15.2 |
| R434 | 7030003320 | S.RES ERJ3GEYJ 101 V (100) | B | 155.6/18.4 |
| R435 | 7030003320 | S.RES ERJ3GEYJ 101 V (100) | B | 154.3/18.4 |
| R436 | 7030003340 | S.RES ERJ3GEYJ 151 V (150) | B | 156.5/6.7 |
| R437 | 7030003340 | S.RES ERJ3GEYJ 151 V (150) | B | 158.5/6.7 |
| R438 | 7030003340 | S.RES ERJ3GEYJ 151 V (150) | B | 162.5/6.7 |
| R439 | 7030003340 | S.RES ERJ3GEYJ 151 V (150) | B | 164.5/6.7 |
| R440 | 7030003340 | S.RES ERJ3GEYJ 151 V (150) | B | 156.5/4.1 |
| R441 | 7030003340 | S.RES ERJ3GEYJ 151 V (150) | B | 158.5/4.1 |
| R442 | 7030003340 | S.RES ERJ3GEYJ 151 V (150) | B | 164.5/4.1 |
| R443 | 7030003340 | S.RES ERJ3GEYJ 151 V (150) | B | 162.5/4.1 |
| R450 | 7030003860 | S.RES ERJ3GE JPW V | T | 36.8/35.4 |
| R601 | 7030003620 | S.RES ERJ3GEYJ 333 V (33 k) | B | 175/55.4 |
| R602 | 7030003590 | S.RES ERJ3GEYJ 183 V (18 k) | B | 171.3/53.1 |
| R603 | 7030003540 | S.RES ERJ3GEYJ 682 V (6.8 k) | B | 173.1/55.2 |
| R604 | 7030003640 | S.RES ERJ3GEYJ 473 V (47 k) | B | 171.3/55.7 |
| R605 | 7030003680 | S.RES ERJ3GEYJ 104 V (100 k) | B | 167.3/55 |
| R606 | 7030003680 | S.RES ERJ3GEYJ 104 V (100 k) | B | 102.8/31.6 |
| R607 | 7030003350 | S.RES ERJ3GEYJ 181 V (180) | B | 87.7/14.2 |
| R608 | 7030003520 | S.RES ERJ3GEYJ 472 V (4.7 k) | B | 90.5/14.2 |
| R609 | 7030003440 | S.RES ERJ3GEYJ 102 V (1 k) | T | 80.8/23.6 |
| R610 | 7030003440 | S.RES ERJ3GEYJ 102 V (1 k) | T | 80.8/24.9 |
| R611 | 7030003440 | S.RES ERJ3GEYJ 102 V (1 k) | T | 80.8/26.2 |
| R612 | 7030003440 | S.RES ERJ3GEYJ 102 V (1 k) | T | 80.1/27.5 |
| R613 | 7030003440 | S.RES ERJ3GEYJ 102 V (1 k) | T | 83.4/27.9 |
| R614 | 7030003440 | S.RES ERJ3GEYJ 102 V (1 k) | T | 83.4/29.2 |
| R615 | 7030003440 | S.RES ERJ3GEYJ 102 V (1 k) | T | 83.4/30.5 |
| R616 | 7030003440 | S.RES ERJ3GEYJ 102 V (1 k) | T | 83.4/31.8 |
| R617 | 7030003800 | S.RES ERJ3GEYJ 105 V (1 M) | T | 86.5/31.8 |
| R618 | 7030003800 | S.RES ERJ3GEYJ 105 V (1 M) | T | 86.5/30.5 |
| R619 | 7030003800 | S.RES ERJ3GEYJ 105 V (1 M) | T | 86.5/29.2 |
| R620 | 7030003800 | S.RES ERJ3GEYJ 105 V (1 M) | T | 86.5/27.9 |
| R621 | 7030003800 | S.RES ERJ3GEYJ 105 V (1 M) | T | 84.1/26.6 |
| R622 | 7030003800 | S.RES ERJ3GEYJ 105 V (1 M) | T | 84.1/25.3 |
| R623 | 7030003800 | S.RES ERJ3GEYJ 105 V (1 M) | T | 84.3/23.6 |
| R624 | 7030003800 | S.RES ERJ3GEYJ 105 V (1 M) | T | 84.3/22.3 |
| R625 | 7030003640 | S.RES ERJ3GEYJ 473 V (47 k) | B | 68.6/27.3 |
| R626 | 7030003600 | S.RES ERJ3GEYJ 223 V (22 k) | B | 68.6/28.6 |
| R627 | 7030003640 | S.RES ERJ3GEYJ 473 V (47 k) | B | 66.3/36.4 |
| R628 | 7030003640 | S.RES ERJ3GEYJ 473 V (47 k) | B | 66.3/35.1 |
| R629 | 7030003640 | S.RES ERJ3GEYJ 473 V (47 k) | B | 71.2/34.9 |
| R630 | 7030003520 | S.RES ERJ3GEYJ 472 V (4.7 k) | B | 68.6/32.5 |
| R631 | 7030003520 | S.RES ERJ3GEYJ 472 V (4.7 k) | T | 67.4/27 |
| R632 | 7030003520 | S.RES ERJ3GEYJ 472 V (4.7 k) | T | 67.4/30.9 |
| R633 | 7030003520 | S.RES ERJ3GEYJ 472 V (4.7 k) | T | 67.4/28.3 |
| R634 | 7030003520 | S.RES ERJ3GEYJ 472 V (4.7 k) | B | 66.3/33.8 |
| R635 | 7030003520 | S.RES ERJ3GEYJ 472 V (4.7 k) | T | 67.4/29.6 |
| R636 | 7030003640 | S.RES ERJ3GEYJ 473 V (47 k) | B | 58.1/19.5 |
| R637 | 7030003640 | S.RES ERJ3GEYJ 473 V (47 k) | B | 61.8/19.5 |
| R639 | 7030003640 | S.RES ERJ3GEYJ 473 V (47 k) | T | 99.1/19 |
| R640 | 7030003640 | S.RES ERJ3GEYJ 473 V (47 k) | T | 97.8/19 |
| R641 | 7030003640 | S.RES ERJ3GEYJ 473 V (47 k) | T | 96.5/19 |
| R642 | 7030003640 | S.RES ERJ3GEYJ 473 V (47 k) | T | 95.2/19 |
| R643 | 7030003600 | S.RES ERJ3GEYJ 223 V (22 k) | B | 80.9/46.3 |
| R644 | 7030003560 | S.RES ERJ3GEYJ 103 V (10 k) | B | 82.2/46.3 |
| R645 | 7030003520 | S.RES ERJ3GEYJ 472 V (4.7 k) | T | 93.1/40.9 |
| R646 | 7030003720 | S.RES ERJ3GEYJ 224 V (220 k) | B | 101.8/41.5 |
| R647 | 7030003720 | S.RES ERJ3GEYJ 224 V (220 k) | B | 102.8/44.1 |
| R648 | 7030003720 | S.RES ERJ3GEYJ 224 V (220 k) | B | 103.8/41.5 |
| R649 | 7030003720 | S.RES ERJ3GEYJ 224 V (220 k) | B | 104.8/44.1 |
| R650 | 7030003720 | S.RES ERJ3GEYJ 224 V (220 k) | B | 105.8/41.5 |
| R651 | 7030003720 | S.RES ERJ3GEYJ 224 V (220 k) | B | 106.8/44.1 |
| R652 | 7030003720 | S.RES ERJ3GEYJ 224 V (220 k) | B | 107.8/41.5 |
| R653 | 7030003720 | S.RES ERJ3GEYJ 224 V (220 k) | B | 108.7/44.1 |
| R654 | 7030003520 | S.RES ERJ3GEYJ 472 V (4.7 k) | B | 102.8/39.2 |
| R655 | 7030003520 | S.RES ERJ3GEYJ 472 V (4.7 k) | B | 102.8/37.7 |
| R656 | 7030003520 | S.RES ERJ3GEYJ 472 V (4.7 k) | T | 144.4/59.9 |
| R657 | 7030003720 | S.RES ERJ3GEYJ 224 V (220 k) | B | 68.6/26 |
| R658 | 7030003640 | S.RES ERJ3GEYJ 473 V (47 k) | B | 84.2/44.2 |
| R659 | 7030003640 | S.RES ERJ3GEYJ 473 V (47 k) | B | 84.2/45.5 |
| R660 | 7030003640 | S.RES ERJ3GEYJ 473 V (47 k) | B | 102.8/29.5 |
| R661 | 7030003640 | S.RES ERJ3GEYJ 473 V (47 k) | B | 69.4/16.4 |
| R662 | 7030003640 | S.RES ERJ3GEYJ 473 V (47 k) | B | 89.2/14.2 |
| R663 | 7030003640 | S.RES ERJ3GEYJ 473 V (47 k) | B | 71.2/15.9 |
| R664 | 7030003640 | S.RES ERJ3GEYJ 473 V (47 k) | B | 71.2/17.2 |
| R665 | 7030003560 | S.RES ERJ3GEYJ 103 V (10 k) | B | 93.1/14.2 |
| R666 | 7030003560 | S.RES ERJ3GEYJ 103 V (10 k) | B | 78.3/16.5 |
| R667 | 7030003560 | S.RES ERJ3GEYJ 103 V (10 k) | B | 77/16 |
| R668 | 7030003640 | S.RES ERJ3GEYJ 473 V (47 k) | B | 84.9/16.8 |
| R669 | 7030003640 | S.RES ERJ3GEYJ 473 V (47 k) | B | 71.2/14.6 |
| R670 | 7030003640 | S.RES ERJ3GEYJ 473 V (47 k) | T | 94.4/43.5 |
| R671 | 7030003640 | S.RES ERJ3GEYJ 473 V (47 k) | T | 95.7/43.5 |
| R672 | 7030003640 | S.RES ERJ3GEYJ 473 V (47 k) | B | 75.7/16.8 |
| R673 | 7030003640 | S.RES ERJ3GEYJ 473 V (47 k) | B | 74.4/16.8 |
| R674 | 7030003640 | S.RES ERJ3GEYJ 473 V (47 k) | T | 91.3/36.8 |
| R675 | 7030003640 | S.RES ERJ3GEYJ 473 V (47 k) | T | 89.1/31.8 |
| R676 | 7030003640 | S.RES ERJ3GEYJ 473 V (47 k) | B | 94.4/14.2 |
| R677 | 7030003520 | S.RES ERJ3GEYJ 472 V (4.7 k) | T | 146.1/65.1 |
| R678 | 7030003720 | S.RES ERJ3GEYJ 224 V (220 k) | B | 68.6/22.1 |
| R679 | 7030003640 | S.RES ERJ3GEYJ 473 V (47 k) | B | 91.8/14.2 |
| R680 | 7030003520 | S.RES ERJ3GEYJ 472 V (4.7 k) | T | 144.6/65.1 |
| R681 | 7030003520 | S.RES ERJ3GEYJ 472 V (4.7 k) | T | 147.5/65.1 |
| R682 | 7030003520 | S.RES ERJ3GEYJ 472 V (4.7 k) | B | 152.7/60.8 |
| R683 | 7030003720 | S.RES ERJ3GEYJ 224 V (220 k) | B | 68.6/23.4 |
| R684 | 7030003640 | S.RES ERJ3GEYJ 473 V (47 k) | B | 80.2/16.2 |
| R685 | 7030003520 | S.RES ERJ3GEYJ 472 V (4.7 k) | B | 152.7/62.1 |

M.=Mounted side (T: Mounted on the Top side, B: Mounted on the Bottom side)
S.=Surface mount

## [LOGIC UNIT]

| REF NO. | ORDER NO. | DESCRIPTION | M. | H/V LOCATION |
|---|---|---|---|---|
| R686 | 7030003520 | S.RES ERJ3GEYJ 472 V (4.7 k) | B | 152.7/59.5 |
| R687 | 7030003520 | S.RES ERJ3GEYJ 472 V (4.7 k) | B | 152.1/53.6 |
| R688 | 7030003720 | S.RES ERJ3GEYJ 224 V (220 k) | B | 68.6/24.7 |
| R689 | 7030003520 | S.RES ERJ3GEYJ 472 V (4.7 k) | B | 153/56.2 |
| R690 | 7030003520 | S.RES ERJ3GEYJ 472 V (4.7 k) | B | 153/54.9 |
| R691 | 7030003640 | S.RES ERJ3GEYJ 473 V (47 k) | B | 66/31.9 |
| R701 | 7030003860 | S.RES ERJ3GE JPW V | T | 93.1/43.5 |
| R801 | 7030003560 | S.RES ERJ3GEYJ 103 V (10 k) | T | 158.2/72.8 |
| R802 | 7030006210 | S.RES ERJ12YJ4R7U (4.7) | T | 162.3/71.2 |
| R803 | 7030003440 | S.RES ERJ3GEYJ 102 V (1 k) | T | 159.5/72.8 |
| R804 | 7030006210 | S.RES ERJ12YJ4R7U (4.7) | T | 168.9/71.2 |
| R805 | 7030003440 | S.RES ERJ3GEYJ 102 V (1 k) | T | 166.1/72.8 |
| R806 | 7030003560 | S.RES ERJ3GEYJ 103 V (10 k) | T | 164.8/72.8 |
| R807 | 7030006210 | S.RES ERJ12YJ4R7U (4.7) | T | 175.5/71.2 |
| R808 | 7030003440 | S.RES ERJ3GEYJ 102 V (1 k) | T | 173/72.8 |
| R809 | 7030003560 | S.RES ERJ3GEYJ 103 V (10 k) | T | 171.6/72.8 |
| R810 | 7030003320 | S.RES ERJ3GEYJ 101 V (100) | B | 154.9/29.9 |
| R811 | 7030003320 | S.RES ERJ3GEYJ 101 V (100) | B | 154.9/27.5 |
| R812 | 7030010440 | S.RES ERJ1TYJ 680U (68) | B | 133/111.2 |
| R813 | 7030003560 | S.RES ERJ3GEYJ 103 V (10 k) | B | 192.6/10 |
| R814 | 7030003440 | S.RES ERJ3GEYJ 102 V (1 k) | T | 105.6/116.6 |
| R816 | 7030003560 | S.RES ERJ3GEYJ 103 V (10 k) | T | 158.9/74.7 |
| R817 | 7030003560 | S.RES ERJ3GEYJ 103 V (10 k) | T | 161.5/74.7 |
| R818 | 7030000140 | S.RES MCR10EZHJ 10 (100) | T | 155.6/78.2 |
| R819 | 7030007190 | S.RES ERJ12YJ220U (22) | T | 135.4/111 |
| R821 | 7030003370 | S.RES ERJ3GEYJ 271 V (270) | B | 15.3/100 |
| R822 | 7030009720 | S.RES ERJ12YJ102U (1 k) | T | 19.9/103.2 |
| R823 | 7030003810 | S.RES ERJ3GEYJ 125 V (1.2 M) | B | 16.8/109.5 |
| R824 | 7030003810 | S.RES ERJ3GEYJ 125 V (1.2 M) | B | 13.5/107.1 |
| R825 | 7030008170 | S.RES ERJ12YJ1R0U (1) | B | 37/112.2 |
| R826 | 7030003610 | S.RES ERJ3GEYJ 273 V (27 k) | B | 16.8/110.8 |
| R827 | 7030003610 | S.RES ERJ3GEYJ 273 V (27 k) | B | 13.5/109.9 |
| R828 | 7030003560 | S.RES ERJ3GEYJ 103 V (10 k) | B | 25.4/101.5 |
| R829 | 7030000340 | S.RES MCR10EZHJ 470 (471) | B | 20.6/104.5 |
| R830 | 7030003600 | S.RES ERJ3GEYJ 223 V (22 k) | B | 18.5/100 |
| R832 | 7030003600 | S.RES ERJ3GEYJ 223 V (22 k) | B | 18.5/98.7 |
| R833 | 7030003560 | S.RES ERJ3GEYJ 103 V (10 k) | B | 18.5/97.4 |
| R850 | 7030003860 | S.RES ERJ3GE JPW V | B | 182.4/50.2 |
| R851 | 7030003680 | S.RES ERJ3GEYJ 104 V (100 k) | B | 187.1/61.9 |
| R852 | 7030003680 | S.RES ERJ3GEYJ 104 V (100 k) | B | 185/61.9 |
| R853 | 7030003770 | S.RES ERJ3GEYJ 564 V (560 k) | B | 183.7/61.9 |
| R854 | 7030003770 | S.RES ERJ3GEYJ 564 V (560 k) | B | 188.4/61.9 |
| R855 | 7030003520 | S.RES ERJ3GEYJ 472 V (4.7 k) | B | 191.5/61.9 |
| R856 | 7030003520 | S.RES ERJ3GEYJ 472 V (4.7 k) | B | 180.6/61.9 |
| R857 | 7030003560 | S.RES ERJ3GEYJ 103 V (10 k) | B | 144.7/14.2 |
| R858 | 7030003460 | S.RES ERJ3GEYJ 152 V (1.5 k) | B | 144.7/12.9 |
| R859 | 7030003470 | S.RES ERJ3GEYJ 182 V (1.8 k) | B | 142.1/12.9 |
| R860 | 7030003500 | S.RES ERJ3GEYJ 332 V (3.3 k) | B | 144.7/15.5 |
| R861 | 7030003480 | S.RES ERJ3GEYJ 222 V (2.2 k) | B | 141.4/14.9 |
| R862 | 7030003380 | S.RES ERJ3GEYJ 331 V (330) | B | 147.7/3.8 |
| R863 | 7030003560 | S.RES ERJ3GEYJ 103 V (10 k) | B | 134.5/21.1 |
| R864 | 7030003460 | S.RES ERJ3GEYJ 152 V (1.5 k) | B | 134.5/19.8 |
| R865 | 7030003470 | S.RES ERJ3GEYJ 182 V (1.8 k) | B | 134.5/18.5 |
| R866 | 7030003500 | S.RES ERJ3GEYJ 332 V (3.3 k) | B | 131.7/17.2 |
| R867 | 7030003480 | S.RES ERJ3GEYJ 222 V (2.2 k) | B | 131.7/18.5 |
| R868 | 7030003380 | S.RES ERJ3GEYJ 331 V (330) | B | 134.1/3.8 |
| R869 | 7030003560 | S.RES ERJ3GEYJ 103 V (10 k) | B | 114.1/30 |
| R870 | 7030003560 | S.RES ERJ3GEYJ 103 V (10 k) | B | 144.7/7.2 |
| R871 | 7030003460 | S.RES ERJ3GEYJ 152 V (1.5 k) | B | 143.4/7.2 |
| R872 | 7030003470 | S.RES ERJ3GEYJ 182 V (1.8 k) | B | 142.1/7.2 |
| R873 | 7030003500 | S.RES ERJ3GEYJ 332 V (3.3 k) | B | 138.2/7.2 |
| R874 | 7030003480 | S.RES ERJ3GEYJ 222 V (2.2 k) | B | 139.5/7.2 |
| R875 | 7030003380 | S.RES ERJ3GEYJ 331 V (330) | B | 140.9/3.8 |
| R876 | 7030003410 | S.RES ERJ3GEYJ 561 V (560) | B | 120.5/14.9 |
| R877 | 7030003700 | S.RES ERJ3GEYJ 154 V (150 k) | B | 120.5/13.6 |
| R878 | 7030003520 | S.RES ERJ3GEYJ 472 V (4.7 k) | B | 120.5/12.3 |
| R879 | 7030003550 | S.RES ERJ3GEYJ 822 V (8.2 k) | B | 117.9/4.2 |
| R880 | 7030003690 | S.RES ERJ3GEYJ 124 V (120 k) | B | 119.7/5 |
| R881 | 7030003520 | S.RES ERJ3GEYJ 472 V (4.7 k) | B | 122.3/5 |
| R882 | 7030003410 | S.RES ERJ3GEYJ 561 V (560) | B | 108.9/15.9 |
| R883 | 7030003550 | S.RES ERJ3GEYJ 822 V (8.2 k) | B | 108.9/14.6 |
| R884 | 7030003520 | S.RES ERJ3GEYJ 472 V (4.7 k) | B | 108.9/13.3 |
| R885 | 7030003410 | S.RES ERJ3GEYJ 561 V (560) | B | 108.9/4.1 |
| R886 | 7030003550 | S.RES ERJ3GEYJ 822 V (8.2 k) | B | 109.7/6.2 |
| R887 | 7030003520 | S.RES ERJ3GEYJ 472 V (4.7 k) | B | 108.4/6.2 |
| R888 | 7030003360 | S.RES ERJ3GEYJ 221 V (220) | B | 181.6/48 |
| R889 | 7030003640 | S.RES ERJ3GEYJ 473 V (47 k) | B | 184.5/48.3 |
| R890 | 7030003360 | S.RES ERJ3GEYJ 221 V (220) | B | 191/47.8 |
| R891 | 7030003560 | S.RES ERJ3GEYJ 103 V (10 k) | B | 188.2/48.3 |
| R892 | 7030003730 | S.RES ERJ3GEYJ 274 V (270 k) | B | 190.2/50.2 |
| R893 | 7030003680 | S.RES ERJ3GEYJ 104 V (100 k) | B | 183.7/50.2 |
| R894 | 7030003200 | S.RES ERJ3GEYJ 100 V (10) | B | 193.2/55.7 |
| R895 | 7030003680 | S.RES ERJ3GEYJ 104 V (100 k) | B | 188.9/50.2 |
| R896 | 7030003200 | S.RES ERJ3GEYJ 100 V (10) | B | 192.9/52.8 |
| R901 | 7030003200 | S.RES ERJ3GEYJ 100 V (10) | T | 165.7/37.7 |
| R902 | 7030003200 | S.RES ERJ3GEYJ 100 V (10) | T | 166.1/30.8 |
| R903 | 7030003200 | S.RES ERJ3GEYJ 100 V (10) | T | 166.6/40.3 |
| R904 | 7030003200 | S.RES ERJ3GEYJ 100 V (10) | T | 167.1/28.2 |
| R905 | 7030003200 | S.RES ERJ3GEYJ 100 V (10) | T | 167.6/37.7 |
| R906 | 7030003200 | S.RES ERJ3GEYJ 100 V (10) | T | 168.1/30.8 |
| R907 | 7030003200 | S.RES ERJ3GEYJ 100 V (10) | T | 168.6/40.3 |
| R908 | 7030003200 | S.RES ERJ3GEYJ 100 V (10) | T | 169.1/28.2 |
| R909 | 7030003200 | S.RES ERJ3GEYJ 100 V (10) | T | 169.6/37.7 |
| R910 | 7030003200 | S.RES ERJ3GEYJ 100 V (10) | T | 170.1/30.8 |
| R911 | 7030003200 | S.RES ERJ3GEYJ 100 V (10) | T | 170.6/40.3 |
| R912 | 7030003200 | S.RES ERJ3GEYJ 100 V (10) | T | 171.6/37.7 |
| R913 | 7030003200 | S.RES ERJ3GEYJ 100 V (10) | T | 172.1/30.8 |
| R914 | 7030003200 | S.RES ERJ3GEYJ 100 V (10) | T | 172.6/40.3 |
| R915 | 7030003200 | S.RES ERJ3GEYJ 100 V (10) | T | 173.1/28.2 |
| R916 | 7030003200 | S.RES ERJ3GEYJ 100 V (10) | T | 173.6/37.7 |
| R917 | 7030003200 | S.RES ERJ3GEYJ 100 V (10) | T | 174.1/30.8 |
| R918 | 7030003200 | S.RES ERJ3GEYJ 100 V (10) | T | 174.6/40.3 |
| R919 | 7030003200 | S.RES ERJ3GEYJ 100 V (10) | T | 175.1/28.2 |
| R920 | 7030003200 | S.RES ERJ3GEYJ 100 V (10) | T | 175.6/37.7 |

## [LOGIC UNIT]

| REF NO. | ORDER NO. | DESCRIPTION | M. | H/V LOCATION |
|---|---|---|---|---|
| R921 | 7030003200 | S.RES ERJ3GEYJ 100 V (10) | T | 176.1/30.8 |
| R922 | 7030003200 | S.RES ERJ3GEYJ 100 V (10) | T | 176.6/40.3 |
| R923 | 7030003200 | S.RES ERJ3GEYJ 100 V (10) | T | 177.1/28.2 |
| R924 | 7030003200 | S.RES ERJ3GEYJ 100 V (10) | T | 177.6/37.7 |
| R925 | 7030003200 | S.RES ERJ3GEYJ 100 V (10) | T | 178.1/30.8 |
| R926 | 7030003200 | S.RES ERJ3GEYJ 100 V (10) | T | 178.6/40.3 |
| R927 | 7030003200 | S.RES ERJ3GEYJ 100 V (10) | T | 179.1/28.2 |
| R928 | 7030003200 | S.RES ERJ3GEYJ 100 V (10) | T | 179.6/37.7 |
| R929 | 7030003200 | S.RES ERJ3GEYJ 100 V (10) | T | 180.1/30.8 |
| R930 | 7030003200 | S.RES ERJ3GEYJ 100 V (10) | T | 180.6/40.3 |
| R931 | 7030003200 | S.RES ERJ3GEYJ 100 V (10) | T | 181.1/28.2 |
| R932 | 7030003200 | S.RES ERJ3GEYJ 100 V (10) | T | 182.1/30.8 |
| R933 | 7030003200 | S.RES ERJ3GEYJ 100 V (10) | T | 182.6/40.3 |
| R934 | 7030003200 | S.RES ERJ3GEYJ 100 V (10) | T | 183.1/28.2 |
| R935 | 7030003200 | S.RES ERJ3GEYJ 100 V (10) | T | 183.6/37.7 |
| R936 | 7030003200 | S.RES ERJ3GEYJ 100 V (10) | T | 184.1/30.8 |
| R937 | 7030003200 | S.RES ERJ3GEYJ 100 V (10) | T | 185.1/28.2 |
| R938 | 7030003200 | S.RES ERJ3GEYJ 100 V (10) | T | 133/37.7 |
| R939 | 7030003200 | S.RES ERJ3GEYJ 100 V (10) | T | 134.2/30.8 |
| R940 | 7030003200 | S.RES ERJ3GEYJ 100 V (10) | T | 134.4/37.8 |
| R941 | 7030003200 | S.RES ERJ3GEYJ 100 V (10) | T | 135.2/28.3 |
| R942 | 7030003200 | S.RES ERJ3GEYJ 100 V (10) | T | 135.7/37.7 |
| R943 | 7030003200 | S.RES ERJ3GEYJ 100 V (10) | T | 136.2/30.8 |
| R944 | 7030003200 | S.RES ERJ3GEYJ 100 V (10) | T | 136.7/40.3 |
| R945 | 7030003200 | S.RES ERJ3GEYJ 100 V (10) | T | 137.2/28.3 |
| R946 | 7030003200 | S.RES ERJ3GEYJ 100 V (10) | T | 137.7/37.7 |
| R947 | 7030003200 | S.RES ERJ3GEYJ 100 V (10) | T | 138.2/30.8 |
| R949 | 7030003200 | S.RES ERJ3GEYJ 100 V (10) | T | 139.2/28.3 |
| R950 | 7030003200 | S.RES ERJ3GEYJ 100 V (10) | T | 139.7/37.7 |
| R951 | 7030003200 | S.RES ERJ3GEYJ 100 V (10) | T | 140.2/30.8 |
| R952 | 7030003200 | S.RES ERJ3GEYJ 100 V (10) | T | 140.7/40.3 |
| R953 | 7030003200 | S.RES ERJ3GEYJ 100 V (10) | T | 141.2/28.3 |
| R954 | 7030003200 | S.RES ERJ3GEYJ 100 V (10) | T | 141.7/37.7 |
| R955 | 7030003200 | S.RES ERJ3GEYJ 100 V (10) | T | 142.2/30.8 |
| R956 | 7030003200 | S.RES ERJ3GEYJ 100 V (10) | T | 142.7/40.3 |
| R957 | 7030003200 | S.RES ERJ3GEYJ 100 V (10) | T | 143.2/28.3 |
| R958 | 7030003200 | S.RES ERJ3GEYJ 100 V (10) | T | 143.7/37.7 |
| R959 | 7030003200 | S.RES ERJ3GEYJ 100 V (10) | T | 144.2/30.8 |
| R960 | 7030003200 | S.RES ERJ3GEYJ 100 V (10) | T | 144.7/40.3 |
| R961 | 7030003200 | S.RES ERJ3GEYJ 100 V (10) | T | 145.7/37.7 |
| R962 | 7030003200 | S.RES ERJ3GEYJ 100 V (10) | T | 146.2/30.8 |
| R963 | 7030003200 | S.RES ERJ3GEYJ 100 V (10) | T | 146.7/40.3 |
| R964 | 7030003200 | S.RES ERJ3GEYJ 100 V (10) | T | 147.2/28.3 |
| R965 | 7030003200 | S.RES ERJ3GEYJ 100 V (10) | T | 147.7/37.7 |
| R966 | 7030003200 | S.RES ERJ3GEYJ 100 V (10) | T | 148.2/30.8 |
| R967 | 7030003200 | S.RES ERJ3GEYJ 100 V (10) | T | 148.7/40.3 |
| R968 | 7030003200 | S.RES ERJ3GEYJ 100 V (10) | T | 149.7/37.7 |
| R969 | 7030003200 | S.RES ERJ3GEYJ 100 V (10) | T | 150.2/28.3 |
| R970 | 7030003200 | S.RES ERJ3GEYJ 100 V (10) | T | 150.7/40.3 |
| R971 | 7030003200 | S.RES ERJ3GEYJ 100 V (10) | T | 151.2/30.8 |
| R974 | 7030003200 | S.RES ERJ3GEYJ 100 V (10) | T | 153.2/30.8 |
| R975 | 7030003200 | S.RES ERJ3GEYJ 100 V (10) | B | 214.5/83.4 |
| R976 | 7030003200 | S.RES ERJ3GEYJ 100 V (10) | B | 220.6/83 |
| R977 | 7030003200 | S.RES ERJ3GEYJ 100 V (10) | B | 214.5/86 |
| R978 | 7030003200 | S.RES ERJ3GEYJ 100 V (10) | B | 220.6/87 |
| R979 | 7030003200 | S.RES ERJ3GEYJ 100 V (10) | B | 214.5/88 |
| R980 | 7030003200 | S.RES ERJ3GEYJ 100 V (10) | B | 220.6/89 |
| R981 | 7030003200 | S.RES ERJ3GEYJ 100 V (10) | B | 220.6/91 |
| R982 | 7030003200 | S.RES ERJ3GEYJ 100 V (10) | B | 220.6/93 |
| R983 | 7030003200 | S.RES ERJ3GEYJ 100 V (10) | B | 214.5/94 |
| R984 | 7030003200 | S.RES ERJ3GEYJ 100 V (10) | B | 12.2/115.7 |
| R985 | 7030003200 | S.RES ERJ3GEYJ 100 V (10) | B | 13.6/115.7 |
| R986 | 7030003200 | S.RES ERJ3GEYJ 100 V (10) | B | 14.9/115.7 |
| R987 | 7030003200 | S.RES ERJ3GEYJ 100 V (10) | B | 16.2/115.7 |
| R988 | 7030003200 | S.RES ERJ3GEYJ 100 V (10) | B | 17.5/115.7 |
| R989 | 7030003200 | S.RES ERJ3GEYJ 100 V (10) | T | 181.6/37.7 |
| R990 | 7030003440 | S.RES ERJ3GEYJ 102 V (1 k) | B | 182.5/92.1 |
| R991 | 7030003440 | S.RES ERJ3GEYJ 102 V (1 k) | B | 183.5/83.5 |
| R992 | 7030003440 | S.RES ERJ3GEYJ 102 V (1 k) | B | 184.5/92.1 |
| R993 | 7030003440 | S.RES ERJ3GEYJ 102 V (1 k) | B | 185.5/83.5 |
| R994 | 7030003440 | S.RES ERJ3GEYJ 102 V (1 k) | B | 186.5/92.1 |
| R995 | 7030003440 | S.RES ERJ3GEYJ 102 V (1 k) | B | 187.5/83.5 |
| R996 | 7030003200 | S.RES ERJ3GEYJ 100 V (10) | B | 220.6/95.6 |
| R998 | 7030003440 | S.RES ERJ3GEYJ 102 V (1 k) | B | 190.5/92.1 |
| R999 | 7030003440 | S.RES ERJ3GEYJ 102 V (1 k) | B | 191.5/83.5 |
| R1000 | 7030003440 | S.RES ERJ3GEYJ 102 V (1 k) | B | 192.5/92.1 |
| R1003 | 7030003200 | S.RES ERJ3GEYJ 100 V (10) | B | 231.3/83 |
| R1004 | 7030003200 | S.RES ERJ3GEYJ 100 V (10) | B | 225.9/82.7 |
| R1005 | 7030003200 | S.RES ERJ3GEYJ 100 V (10) | B | 231.3/81 |
| R1006 | 7030003200 | S.RES ERJ3GEYJ 100 V (10) | B | 222.7/80 |
| R1007 | 7030003200 | S.RES ERJ3GEYJ 100 V (10) | B | 231.3/79 |
| R1008 | 7030003200 | S.RES ERJ3GEYJ 100 V (10) | B | 222.7/48.5 |
| R1009 | 7030003200 | S.RES ERJ3GEYJ 100 V (10) | B | 231.3/49.5 |
| R1010 | 7030003200 | S.RES ERJ3GEYJ 100 V (10) | B | 222.7/52.5 |
| R1011 | 7030003200 | S.RES ERJ3GEYJ 100 V (10) | B | 231.3/53.5 |
| R1012 | 7030003200 | S.RES ERJ3GEYJ 100 V (10) | B | 222.7/56.5 |
| R1013 | 7030003200 | S.RES ERJ3GEYJ 100 V (10) | B | 231.3/57.5 |
| R1014 | 7030003200 | S.RES ERJ3GEYJ 100 V (10) | B | 222.7/58.5 |
| R1015 | 7030003200 | S.RES ERJ3GEYJ 100 V (10) | B | 231.3/59.5 |
| R1016 | 7030003200 | S.RES ERJ3GEYJ 100 V (10) | T | 181/22.1 |
| R1017 | 7030003200 | S.RES ERJ3GEYJ 100 V (10) | T | 179.7/22.1 |
| R1018 | 7030003200 | S.RES ERJ3GEYJ 100 V (10) | T | 176.7/22.1 |
| R1019 | 7030003200 | S.RES ERJ3GEYJ 100 V (10) | T | 174.7/22.2 |
| R1020 | 7030003200 | S.RES ERJ3GEYJ 100 V (10) | T | 173.4/22.2 |
| R1021 | 7030003200 | S.RES ERJ3GEYJ 100 V (10) | T | 172.1/22.2 |
| R1022 | 7030003200 | S.RES ERJ3GEYJ 100 V (10) | T | 170.8/22.2 |
| R1023 | 7030003200 | S.RES ERJ3GEYJ 100 V (10) | T | 169.5/22.2 |
| R1024 | 7030003200 | S.RES ERJ3GEYJ 100 V (10) | B | 220.7/85 |
| R1025 | 7030003320 | S.RES ERJ3GEYJ 101 V (100) | B | 120.5/9.7 |
| R1026 | 7030003320 | S.RES ERJ3GEYJ 101 V (100) | B | 108.9/8.1 |
| R1027 | 7030003320 | S.RES ERJ3GEYJ 101 V (100) | B | 137.3/17.2 |
| R1028 | 7030003320 | S.RES ERJ3GEYJ 101 V (100) | B | 135.6/7.2 |
| R1029 | 7030003520 | S.RES ERJ3GEYJ 472 V (4.7 k) | B | 120.5/11 |
| R1030 | 7030003520 | S.RES ERJ3GEYJ 472 V (4.7 k) | B | 120.5/7.1 |

M.=Mounted side (T: Mounted on the Top side, B: Mounted on the Bottom side)
S.=Surface mount

## [LOGIC UNIT]

| REF NO. | ORDER NO. | DESCRIPTION | M. | H/V LOCATION |
|---|---|---|---|---|
| R1031 | 7030003520 | S.RES ERJ3GEYJ 472 V (4.7 k) | B | 108.9/12 |
| R1032 | 7030003520 | S.RES ERJ3GEYJ 472 V (4.7 k) | B | 108.9/9.4 |
| R1033 | 7030003860 | S.RES ERJ3GE JPW V | T | 188.9/62.5 |
| R1035 | 7030003540 | S.RES ERJ3GEYJ 682 V (6.8 k) | B | 192.2/60.1 |
| R1036 | 7030003540 | S.RES ERJ3GEYJ 682 V (6.8 k) | B | 184.5/64.7 |
| R1041 | 7030003520 | S.RES ERJ3GEYJ 472 V (4.7 k) | B | 173.8/28.2 |
| R1042 | 7030003550 | S.RES ERJ3GEYJ 822 V (8.2 k) | T | 115.2/16.6 |
| R1052 | 7030008240 | S.RES ERJ12Y0R00U | T | 86.1/114.3 |
| R1053 | 7030008240 | S.RES ERJ12Y0R00U | T | 67.5/114.4 |
| R1054 | 7030008240 | S.RES ERJ12Y0R00U | T | 9.4/116.7 |
| R1056 | 7030003860 | S.RES ERJ3GE JPW V | T | 138.7/40.3 |
| R1057 | 7030003860 | S.RES ERJ3GE JPW V | B | 123.1/7.1 |
| R1101 | 7030003280 | S.RES ERJ3GEYJ 470 V (47) | T | 18.7/30.5 |
| R1102 | 7030003280 | S.RES ERJ3GEYJ 470 V (47) | T | 18.7/33.1 |
| R1103 | 7030003280 | S.RES ERJ3GEYJ 470 V (47) | T | 18.7/35.7 |
| R1104 | 7030003280 | S.RES ERJ3GEYJ 470 V (47) | T | 20.5/30.5 |
| R1105 | 7030003280 | S.RES ERJ3GEYJ 470 V (47) | T | 20.5/33.1 |
| R1106 | 7030003280 | S.RES ERJ3GEYJ 470 V (47) | T | 20.5/35.7 |
| R1107 | 7030003280 | S.RES ERJ3GEYJ 470 V (47) | T | 22.3/30.5 |
| R1108 | 7030003280 | S.RES ERJ3GEYJ 470 V (47) | T | 22.3/33.1 |
| R1109 | 7030003280 | S.RES ERJ3GEYJ 470 V (47) | T | 22.3/35.7 |
| R1110 | 7030003280 | S.RES ERJ3GEYJ 470 V (47) | T | 24.1/27.9 |
| R1111 | 7030003280 | S.RES ERJ3GEYJ 470 V (47) | T | 24.1/30.5 |
| R1112 | 7030003280 | S.RES ERJ3GEYJ 470 V (47) | T | 24.1/33.1 |
| R1113 | 7030003280 | S.RES ERJ3GEYJ 470 V (47) | T | 25.9/27.9 |
| R1114 | 7030003280 | S.RES ERJ3GEYJ 470 V (47) | T | 25.9/30.5 |
| R1115 | 7030003280 | S.RES ERJ3GEYJ 470 V (47) | T | 25.9/33.1 |
| R1116 | 7030003280 | S.RES ERJ3GEYJ 470 V (47) | T | 27.3/30.5 |
| R1117 | 7030003280 | S.RES ERJ3GEYJ 470 V (47) | T | 28.6/30.5 |
| R1118 | 7030003280 | S.RES ERJ3GEYJ 470 V (47) | T | 29.9/30.5 |
| R1119 | 7030003280 | S.RES ERJ3GEYJ 470 V (47) | T | 31.2/30.5 |
| R1120 | 7030003280 | S.RES ERJ3GEYJ 470 V (47) | T | 32.5/30.5 |
| R1121 | 7030003280 | S.RES ERJ3GEYJ 470 V (47) | T | 33.8/30.5 |
| R1122 | 7030003280 | S.RES ERJ3GEYJ 470 V (47) | T | 35.1/30.5 |
| R1123 | 7030003280 | S.RES ERJ3GEYJ 470 V (47) | T | 40.5/29.6 |
| R1124 | 7030003280 | S.RES ERJ3GEYJ 470 V (47) | T | 42.8/34.8 |
| R1125 | 7030003280 | S.RES ERJ3GEYJ 470 V (47) | T | 43.5/32.2 |
| R1126 | 7030003280 | S.RES ERJ3GEYJ 470 V (47) | T | 44.2/34.8 |
| R1127 | 7030003280 | S.RES ERJ3GEYJ 470 V (47) | T | 44.9/32.2 |
| R1128 | 7030003280 | S.RES ERJ3GEYJ 470 V (47) | T | 45.6/34.8 |
| R1129 | 7030003280 | S.RES ERJ3GEYJ 470 V (47) | T | 46.3/32.2 |
| R1130 | 7030003280 | S.RES ERJ3GEYJ 470 V (47) | T | 47/34.8 |
| R1131 | 7030003280 | S.RES ERJ3GEYJ 470 V (47) | T | 47.7/32.2 |
| R1132 | 7030003280 | S.RES ERJ3GEYJ 470 V (47) | T | 48.4/34.8 |
| R1133 | 7030003280 | S.RES ERJ3GEYJ 470 V (47) | T | 49.1/32.2 |
| R1134 | 7030003280 | S.RES ERJ3GEYJ 470 V (47) | T | 49.8/34.8 |
| R1135 | 7030003280 | S.RES ERJ3GEYJ 470 V (47) | T | 50.5/32.2 |
| R1136 | 7030003280 | S.RES ERJ3GEYJ 470 V (47) | T | 51.2/34.8 |
| R1137 | 7030003280 | S.RES ERJ3GEYJ 470 V (47) | T | 51.9/32.2 |
| R1138 | 7030003280 | S.RES ERJ3GEYJ 470 V (47) | T | 52.6/34.8 |
| R1139 | 7030003280 | S.RES ERJ3GEYJ 470 V (47) | T | 53.3/32.2 |
| R1140 | 7030003280 | S.RES ERJ3GEYJ 470 V (47) | T | 54/34.8 |
| R1141 | 7030003280 | S.RES ERJ3GEYJ 470 V (47) | T | 54.7/32.2 |
| R1142 | 7030003280 | S.RES ERJ3GEYJ 470 V (47) | T | 55.4/34.8 |
| R1143 | 7030003280 | S.RES ERJ3GEYJ 470 V (47) | T | 56.1/32.2 |
| R1144 | 7030003280 | S.RES ERJ3GEYJ 470 V (47) | T | 56.8/34.8 |
| R1145 | 7030003280 | S.RES ERJ3GEYJ 470 V (47) | T | 57.5/32.2 |
| R1146 | 7030003280 | S.RES ERJ3GEYJ 470 V (47) | T | 58.2/34.8 |
| R1151 | 7030003290 | S.RES ERJ3GEYJ 560 V (56) | T | 205.2/11.7 |
| R1152 | 7030003320 | S.RES ERJ3GEYJ 101 V (100) | T | 203.6/11.7 |
| R1153 | 7030003320 | S.RES ERJ3GEYJ 101 V (100) | T | 200.8/13.2 |
| R1154 | 7030003320 | S.RES ERJ3GEYJ 101 V (100) | T | 199.5/13.2 |
| R1155 | 7030003320 | S.RES ERJ3GEYJ 101 V (100) | B | 201.4/10.8 |
| R1156 | 7030003320 | S.RES ERJ3GEYJ 101 V (100) | T | 198.2/13.2 |
| R1157 | 7030003320 | S.RES ERJ3GEYJ 101 V (100) | B | 200.1/10.8 |
| R1158 | 7030003320 | S.RES ERJ3GEYJ 101 V (100) | T | 196.9/13.2 |
| R1159 | 7030003320 | S.RES ERJ3GEYJ 101 V (100) | B | 198.8/10.8 |
| R1160 | 7030003320 | S.RES ERJ3GEYJ 101 V (100) | T | 195.6/13.2 |
| R1161 | 7030003320 | S.RES ERJ3GEYJ 101 V (100) | B | 197.5/10.8 |
| R1162 | 7030003320 | S.RES ERJ3GEYJ 101 V (100) | B | 196.2/10.8 |
| R1163 | 7030003320 | S.RES ERJ3GEYJ 101 V (100) | T | 194.3/13.2 |
| R1164 | 7030003320 | S.RES ERJ3GEYJ 101 V (100) | T | 193/13.2 |
| R1165 | 7030003320 | S.RES ERJ3GEYJ 101 V (100) | T | 191.1/14.9 |
| R1166 | 7030003320 | S.RES ERJ3GEYJ 101 V (100) | T | 189.8/14.9 |
| R1167 | 7030003320 | S.RES ERJ3GEYJ 101 V (100) | T | 188.5/14.9 |
| R1168 | 7030003320 | S.RES ERJ3GEYJ 101 V (100) | T | 187.2/14.9 |
| R1169 | 7030003320 | S.RES ERJ3GEYJ 101 V (100) | T | 185.9/14.9 |
| R1170 | 7030003320 | S.RES ERJ3GEYJ 101 V (100) | T | 181.4/9.5 |
| | | | | |
| C1 | 4030011600 | S.CER C1608 JB 1E 104K-T | B | 69.7/83.3 |
| C2 | 4030011600 | S.CER C1608 JB 1E 104K-T | B | 68.1/83.3 |
| C3 | 4030011600 | S.CER C1608 JB 1E 104K-T | B | 63.3/83.3 |
| C4 | 4030011600 | S.CER C1608 JB 1E 104K-T | B | 59.3/83.3 |
| C5 | 4030011600 | S.CER C1608 JB 1E 104K-T | B | 48.9/83.3 |
| C6 | 4030011600 | S.CER C1608 JB 1E 104K-T | B | 66.9/100.4 |
| C7 | 4030011600 | S.CER C1608 JB 1E 104K-T | B | 62.1/100.4 |
| C8 | 4030011600 | S.CER C1608 JB 1E 104K-T | T | 69.7/107.5 |
| C9 | 4030011600 | S.CER C1608 JB 1E 104K-T | T | 68.1/107.5 |
| C10 | 4030011600 | S.CER C1608 JB 1E 104K-T | T | 63.3/107.5 |
| C11 | 4030011600 | S.CER C1608 JB 1E 104K-T | T | 59.3/107.5 |
| C12 | 4030011600 | S.CER C1608 JB 1E 104K-T | T | 48.9/107.5 |
| C13 | 4030011600 | S.CER C1608 JB 1E 104K-T | T | 66.6/90.9 |
| C14 | 4030011600 | S.CER C1608 JB 1E 104K-T | T | 61.9/90.9 |
| C51 | 4030011600 | S.CER C1608 JB 1E 104K-T | B | 105.5/54.7 |
| C52 | 4030011600 | S.CER C1608 JB 1E 104K-T | B | 97.1/46.1 |
| C53 | 4030011600 | S.CER C1608 JB 1E 104K-T | B | 94.4/46.1 |
| C54 | 4030011600 | S.CER C1608 JB 1E 104K-T | B | 106.6/51 |
| C55 | 4030011600 | S.CER C1608 JB 1E 104K-T | B | 109/65.9 |
| C56 | 4030011600 | S.CER C1608 JB 1E 104K-T | B | 114/65.9 |
| C57 | 4030011600 | S.CER C1608 JB 1E 104K-T | B | 127.6/63.1 |
| C58 | 4030011600 | S.CER C1608 JB 1E 104K-T | B | 127.7/55.9 |
| C59 | 4030011600 | S.CER C1608 JB 1E 104K-T | B | 117.5/46.1 |
| C60 | 4030011600 | S.CER C1608 JB 1E 104K-T | B | 111.5/46.1 |

## [LOGIC UNIT]

| REF NO. | ORDER NO. | DESCRIPTION | M. | H/V LOCATION |
|---|---|---|---|---|
| C61 | 4030009990 | S.CER C1608 CH 1H 200J-T | T | 143/78.1 |
| C62 | 4030011600 | S.CER C1608 JB 1E 104K-T | T | 139.9/100.6 |
| C63 | 4030008890 | S.CER C1608 JB 1H 273K-T | T | 144.5/100.6 |
| C64 | 4030011600 | S.CER C1608 JB 1E 104K-T | T | 146.7/102.5 |
| C65 | 4030011600 | S.CER C1608 JB 1E 104K-T | T | 96/34.2 |
| C66 | 4030011600 | S.CER C1608 JB 1E 104K-T | B | 34.1/27.4 |
| C101 | 4030011600 | S.CER C1608 JB 1E 104K-T | T | 23.3/71.9 |
| C102 | 4030011600 | S.CER C1608 JB 1E 104K-T | B | 43.2/48.2 |
| C103 | 4030011600 | S.CER C1608 JB 1E 104K-T | B | 47.1/78 |
| C104 | 4030011600 | S.CER C1608 JB 1E 104K-T | B | 46.8/58.8 |
| C105 | 4030011600 | S.CER C1608 JB 1E 104K-T | B | 49.5/71 |
| C106 | 4030011600 | S.CER C1608 JB 1E 104K-T | B | 46.8/57.5 |
| C107 | 4030011600 | S.CER C1608 JB 1E 104K-T | B | 52/57.5 |
| C108 | 4030011600 | S.CER C1608 JB 1E 104K-T | B | 57.7/57.5 |
| C109 | 4030011600 | S.CER C1608 JB 1E 104K-T | B | 59.6/60.8 |
| C110 | 4030011600 | S.CER C1608 JB 1E 104K-T | B | 46.8/68 |
| C111 | 4550007520 | S.TAN F931A106MAABMA | B | 57.7/48.8 |
| C112 | 4030011600 | S.CER C1608 JB 1E 104K-T | B | 59/50.5 |
| C113 | 4550007520 | S.TAN F931A106MAABMA | B | 63.6/48.8 |
| C114 | 4030011600 | S.CER C1608 JB 1E 104K-T | B | 62/50.5 |
| C115 | 4550007520 | S.TAN F931A106MAABMA | B | 68.8/48.8 |
| C116 | 4030011600 | S.CER C1608 JB 1E 104K-T | B | 64.9/50.5 |
| C117 | 4030011600 | S.CER C1608 JB 1E 104K-T | B | 46.9/71 |
| C118 | 4030011600 | S.CER C1608 JB 1E 104K-T | B | 46.8/61.4 |
| C119 | 4030011600 | S.CER C1608 JB 1E 104K-T | B | 46.8/69.3 |
| C120 | 4030011600 | S.CER C1608 JB 1E 104K-T | B | 59.6/69.4 |
| C121 | 4030011600 | S.CER C1608 JB 1E 104K-T | B | 57.8/70.2 |
| C122 | 4030011600 | S.CER C1608 JB 1E 104K-T | B | 56.5/70.2 |
| C123 | 4030006860 | S.CER C1608 JB 1H 102K-T | B | 57.3/78 |
| C124 | 4030011600 | S.CER C1608 JB 1E 104K-T | B | 52.1/71 |
| C125 | 4030011600 | S.CER C1608 JB 1E 104K-T | B | 54.7/71 |
| C126 | 4030011600 | S.CER C1608 JB 1E 104K-T | B | 46.8/66.7 |
| C127 | 4030011600 | S.CER C1608 JB 1E 104K-T | B | 43.2/50.8 |
| C128 | 4030011600 | S.CER C1608 JB 1E 104K-T | B | 52.2/50.8 |
| C129 | 4030011600 | S.CER C1608 JB 1E 104K-T | B | 46.1/64.8 |
| C130 | 4030011600 | S.CER C1608 JB 1E 104K-T | B | 59.6/66.8 |
| C131 | 4030011600 | S.CER C1608 JB 1E 104K-T | B | 66.4/68.7 |
| C132 | 4030011600 | S.CER C1608 JB 1E 104K-T | B | 59.6/63.6 |
| C133 | 4030011600 | S.CER C1608 JB 1E 104K-T | B | 47.1/50.9 |
| C134 | 4030011600 | S.CER C1608 JB 1E 104K-T | B | 39.3/58.6 |
| C135 | 4030011600 | S.CER C1608 JB 1E 104K-T | B | 46.8/60.1 |
| C136 | 4030011600 | S.CER C1608 JB 1E 104K-T | B | 54.6/57.5 |
| C137 | 4030011600 | S.CER C1608 JB 1E 104K-T | B | 49.4/57.5 |
| C138 | 4030011600 | S.CER C1608 JB 1E 104K-T | B | 54.7/69.3 |
| C139 | 4030011600 | S.CER C1608 JB 1E 104K-T | B | 59.6/58.2 |
| C140 | 4030006900 | S.CER C1608 JB 1H 103K-T | B | 66.4/58.5 |
| C141 | 4030011600 | S.CER C1608 JB 1E 104K-T | T | 64.3/38.6 |
| C142 | 4030011600 | S.CER C1608 JB 1E 104K-T | T | 76.8/32.5 |
| C144 | 4030011600 | S.CER C1608 JB 1E 104K-T | T | 7.9/62.8 |
| C145 | 4030011600 | S.CER C1608 JB 1E 104K-T | T | 10/62.1 |
| C146 | 4030007020 | S.CER C1608 CH 1H 120J-T | T | 8.1/58.8 |
| C147 | 4030007020 | S.CER C1608 CH 1H 120J-T | T | 10/59.5 |
| C148 | 4030011600 | S.CER C1608 JB 1E 104K-T | T | 6.7/70.5 |
| C149 | 4030011600 | S.CER C1608 JB 1E 104K-T | T | 7.4/73.7 |
| C201 | 4030011600 | S.CER C1608 JB 1E 104K-T | B | 118.1/103.3 |
| C202 | 4030011600 | S.CER C1608 JB 1E 104K-T | B | 120.7/103.3 |
| C203 | 4030011600 | S.CER C1608 JB 1E 104K-T | B | 124.2/103.3 |
| C204 | 4030011600 | S.CER C1608 JB 1E 104K-T | B | 127.3/103.3 |
| C205 | 4030011600 | S.CER C1608 JB 1E 104K-T | B | 137.4/103.5 |
| C206 | 4030011600 | S.CER C1608 JB 1E 104K-T | B | 120.7/87.6 |
| C207 | 4030011600 | S.CER C1608 JB 1E 104K-T | B | 125.5/87.7 |
| C208 | 4030011600 | S.CER C1608 JB 1E 104K-T | B | 117.7/85.8 |
| C209 | 4030011600 | S.CER C1608 JB 1E 104K-T | B | 119.2/85.8 |
| C210 | 4030011600 | S.CER C1608 JB 1E 104K-T | B | 124/85.8 |
| C211 | 4030011600 | S.CER C1608 JB 1E 104K-T | B | 128/85.8 |
| C212 | 4030011600 | S.CER C1608 JB 1E 104K-T | B | 138.4/85.8 |
| C213 | 4030011600 | S.CER C1608 JB 1E 104K-T | B | 120.7/70 |
| C214 | 4030011600 | S.CER C1608 JB 1E 104K-T | B | 124.1/70 |
| C215 | 4030011600 | S.CER C1608 JB 1E 104K-T | B | 89.4/90.4 |
| C216 | 4030011600 | S.CER C1608 JB 1E 104K-T | B | 85.6/71.6 |
| C217 | 4030011600 | S.CER C1608 JB 1E 104K-T | B | 91.5/79.6 |
| C218 | 4030011600 | S.CER C1608 JB 1E 104K-T | B | 92.1/72.6 |
| C219 | 4030011600 | S.CER C1608 JB 1E 104K-T | B | 94.7/72.6 |
| C220 | 4030011600 | S.CER C1608 JB 1E 104K-T | B | 90.8/72.6 |
| C221 | 4030011600 | S.CER C1608 JB 1E 104K-T | B | 96.6/66.6 |
| C222 | 4030011600 | S.CER C1608 JB 1E 104K-T | B | 94.4/89.4 |
| C223 | 4030011600 | S.CER C1608 JB 1E 104K-T | B | 90.8/83.4 |
| C224 | 4030011600 | S.CER C1608 JB 1E 104K-T | B | 85.6/83.7 |
| C225 | 4030011600 | S.CER C1608 JB 1E 104K-T | B | 91.5/77 |
| C226 | 4030011600 | S.CER C1608 JB 1E 104K-T | B | 91.5/75.7 |
| C227 | 4030011600 | S.CER C1608 JB 1E 104K-T | B | 96.7/72.6 |
| C228 | 4030011600 | S.CER C1608 JB 1E 104K-T | B | 91.5/74.4 |
| C229 | 4030011600 | S.CER C1608 JB 1E 104K-T | B | 100.6/89.4 |
| C230 | 4030011600 | S.CER C1608 JB 1E 104K-T | B | 97.3/83.2 |
| C231 | 4030011600 | S.CER C1608 JB 1E 104K-T | B | 102.5/83.6 |
| C232 | 4030011600 | S.CER C1608 JB 1E 104K-T | B | 91.5/80.9 |
| C233 | 4030011600 | S.CER C1608 JB 1E 104K-T | B | 102.5/77.1 |
| C234 | 4030011600 | S.CER C1608 JB 1E 104K-T | B | 99.3/72.6 |
| C235 | 4030011600 | S.CER C1608 JB 1E 104K-T | B | 102.2/66.4 |
| C236 | 4030011600 | S.CER C1608 JB 1E 104K-T | B | 102.5/82.3 |
| C237 | 4030011600 | S.CER C1608 JB 1E 104K-T | B | 102.5/81 |
| C238 | 4030011600 | S.CER C1608 JB 1E 104K-T | B | 102.5/79.7 |
| C239 | 4030011600 | S.CER C1608 JB 1E 104K-T | B | 85.6/81.1 |
| C240 | 4030011600 | S.CER C1608 JB 1E 104K-T | B | 102.5/75.8 |
| C241 | 4030011600 | S.CER C1608 JB 1E 104K-T | B | 102.5/74.5 |
| C242 | 4030011600 | S.CER C1608 JB 1E 104K-T | B | 103.2/72.6 |
| C243 | 4030011600 | S.CER C1608 JB 1E 104K-T | B | 101.9/72.6 |
| C244 | 4030011600 | S.CER C1608 JB 1E 104K-T | B | 91.5/78.3 |
| C245 | 4030011600 | S.CER C1608 JB 1E 104K-T | B | 92.1/83.2 |
| C246 | 4030011600 | S.CER C1608 JB 1E 104K-T | B | 102.5/78.4 |
| C247 | 4030011600 | S.CER C1608 JB 1E 104K-T | B | 99.3/83.2 |
| C248 | 4030011600 | S.CER C1608 JB 1E 104K-T | B | 100.6/72.6 |
| C249 | 4030011600 | S.CER C1608 JB 1E 104K-T | B | 93.4/72.6 |
| C250 | 4030007050 | S.CER C1608 CH 1H 220J-T | T | 101/91.3 |

M.=Mounted side (T: Mounted on the Top side, B: Mounted on the Bottom side)
S.=Surface mount

## [LOGIC UNIT]

| REF NO. | ORDER NO. | DESCRIPTION | M. | H/V LOCATION |
|---|---|---|---|---|
| C251 | 4030007050 | S.CER C1608 CH 1H 220J-T | T | 98.4/91.3 |
| C252 | 4030006990 | S.CER C1608 CH 1H 080D-T | T | 98.9/63.9 |
| C253 | 4030006990 | S.CER C1608 CH 1H 080D-T | T | 101.5/63.9 |
| C254 | 4030006900 | S.CER C1608 JB 1H 103K-T | T | 83.7/84.6 |
| C255 | 4510008520 | S.ELE EEE1CA470SP | T | 101.3/100.8 |
| C256 | 4030006900 | S.CER C1608 JB 1H 103K-T | T | 83/64.1 |
| C257 | 4510007130 | S.ELE EEFCD 0J 470R | T | 78.5/66.3 |
| C258 | 4030011600 | S.CER C1608 JB 1E 104K-T | T | 84.9/61 |
| C259 | 4030011600 | S.CER C1608 JB 1E 104K-T | B | 85.6/76.9 |
| C260 | 4030011600 | S.CER C1608 JB 1E 104K-T | T | 214.2/33 |
| C261 | 4030011600 | S.CER C1608 JB 1E 104K-T | T | 214.2/31.7 |
| C262 | 4030011600 | S.CER C1608 JB 1E 104K-T | T | 214.2/29.7 |
| C263 | 4030011600 | S.CER C1608 JB 1E 104K-T | T | 214.2/28.4 |
| C264 | 4030011600 | S.CER C1608 JB 1E 104K-T | T | 205.4/23.2 |
| C265 | 4510008540 | S.ELE EEE1CA100SR | T | 214.2/36.7 |
| C266 | 4030011600 | S.CER C1608 JB 1E 104K-T | T | 196.3/28.7 |
| C267 | 4030007100 | S.CER C1608 CH 1H 560J-T | B | 219.4/32.5 |
| C268 | 4030007100 | S.CER C1608 CH 1H 560J-T | B | 219.4/29.5 |
| C269 | 4030007100 | S.CER C1608 CH 1H 560J-T | B | 219.4/26.5 |
| C270 | 4030007050 | S.CER C1608 CH 1H 220J-T | B | 225/32.5 |
| C271 | 4030007050 | S.CER C1608 CH 1H 220J-T | B | 225/29.5 |
| C272 | 4030007050 | S.CER C1608 CH 1H 220J-T | B | 225/26.5 |
| C273 | 4030011600 | S.CER C1608 JB 1E 104K-T | T | 194.2/16.5 |
| C274 | 4030007170 | S.CER C1608 CH 1H 221J-T | T | 203.9/16.5 |
| C275 | 4030007170 | S.CER C1608 CH 1H 221J-T | T | 203.9/19.4 |
| C276 | 4030007050 | S.CER C1608 CH 1H 220J-T | B | 217.8/9.3 |
| C277 | 4030007050 | S.CER C1608 CH 1H 220J-T | B | 220.7/9.3 |
| C278 | 4510008500 | S.ELE EEE1CA101WP | T | 223.4/38.4 |
| C279 | 4030007050 | S.CER C1608 CH 1H 220J-T | B | 227.8/9.3 |
| C280 | 4030007050 | S.CER C1608 CH 1H 220J-T | B | 230.7/9.3 |
| C281 | 4510008500 | S.ELE EEE1CA101WP | T | 223.4/30.6 |
| C282 | 4030011600 | S.CER C1608 JB 1E 104K-T | B | 215.6/39.1 |
| C283 | 4510008550 | S.ELE EEE1HA010SR | T | 217.2/42 |
| C284 | 4030011600 | S.CER C1608 JB 1E 104K-T | B | 104.6/21.2 |
| C285 | 4510008540 | S.ELE EEE1CA100SR | T | 105.6/37.4 |
| C286 | 4510008540 | S.ELE EEE1CA100SR | T | 105.6/32.6 |
| C287 | 4030011600 | S.CER C1608 JB 1E 104K-T | B | 104.6/23.2 |
| C288 | 4510008540 | S.ELE EEE1CA100SR | T | 105.6/27.8 |
| C289 | 4030011600 | S.CER C1608 JB 1E 104K-T | B | 104.6/24.5 |
| C290 | 4030011600 | S.CER C1608 JB 1E 104K-T | B | 115.5/21.2 |
| C291 | 4510008540 | S.ELE EEE1CA100SR | T | 111.7/37.4 |
| C292 | 4510008540 | S.ELE EEE1CA100SR | T | 111.7/32.6 |
| C293 | 4030011600 | S.CER C1608 JB 1E 104K-T | B | 115.5/23.2 |
| C294 | 4510008540 | S.ELE EEE1CA100SR | T | 111.7/27.8 |
| C295 | 4030011600 | S.CER C1608 JB 1E 104K-T | B | 115.5/24.5 |
| C296 | 4030011600 | S.CER C1608 JB 1E 104K-T | B | 126.3/33.9 |
| C297 | 4510008540 | S.ELE EEE1CA100SR | T | 123.9/39.8 |
| C298 | 4030011600 | S.CER C1608 JB 1E 104K-T | B | 126.3/31.3 |
| C299 | 4510008540 | S.ELE EEE1CA100SR | T | 123.9/35 |
| C300 | 4030011600 | S.CER C1608 JB 1E 104K-T | B | 114/34.6 |
| C301 | 4510008540 | S.ELE EEE1CA100SR | T | 117.8/39.8 |
| C302 | 4030011600 | S.CER C1608 JB 1E 104K-T | B | 113.3/32.5 |
| C303 | 4510008540 | S.ELE EEE1CA100SR | T | 117.8/35 |
| C401 | 4030011600 | S.CER C1608 JB 1E 104K-T | B | 28.2/61.5 |
| C402 | 4030011600 | S.CER C1608 JB 1E 104K-T | B | 22.3/61.5 |
| C403 | 4030011600 | S.CER C1608 JB 1E 104K-T | B | 8.7/53.3 |
| C404 | 4030011600 | S.CER C1608 JB 1E 104K-T | B | 8.7/45.6 |
| C405 | 4030011600 | S.CER C1608 JB 1E 104K-T | B | 20.2/35.6 |
| C406 | 4030011600 | S.CER C1608 JB 1E 104K-T | B | 25.4/35.6 |
| C407 | 4030011600 | S.CER C1608 JB 1E 104K-T | B | 29.7/35.6 |
| C408 | 4030011600 | S.CER C1608 JB 1E 104K-T | B | 38.5/42.3 |
| C409 | 4030011600 | S.CER C1608 JB 1E 104K-T | B | 38.7/47.5 |
| C410 | 4030011600 | S.CER C1608 JB 1E 104K-T | B | 38.7/51 |
| C411 | 4030011600 | S.CER C1608 JB 1E 104K-T | B | 40.9/36.2 |
| C412 | 4030006860 | S.CER C1608 JB 1H 102K-T | T | 29.3/44.7 |
| C413 | 4030006900 | S.CER C1608 JB 1H 103K-T | T | 26.7/44.7 |
| C414 | 4030007150 | S.CER C1608 CH 1H 151J-T | T | 28/44.7 |
| C415 | 4030011600 | S.CER C1608 JB 1E 104K-T | B | 15.2/30.5 |
| C416 | 4510008540 | S.ELE EEE1CA100SR | T | 13.7/28.8 |
| C417 | 4030011600 | S.CER C1608 JB 1E 104K-T | B | 15.2/31.8 |
| C418 | 4510008540 | S.ELE EEE1CA100SR | T | 13.7/33.6 |
| C419 | 4030006900 | S.CER C1608 JB 1H 103K-T | T | 36.9/26.6 |
| C420 | 4030007150 | S.CER C1608 CH 1H 151J-T | T | 36.9/25.3 |
| C421 | 4550007520 | S.TAN F931A106MAABMA | B | 19.7/26.8 |
| C422 | 4030011600 | S.CER C1608 JB 1E 104K-T | T | 20.8/66.3 |
| C423 | 4030011600 | S.CER C1608 JB 1E 104K-T | B | 35.3/85.1 |
| C424 | 4030011600 | S.CER C1608 JB 1E 104K-T | B | 38.1/77.1 |
| C425 | 4030011600 | S.CER C1608 JB 1E 104K-T | B | 34.6/71.4 |
| C426 | 4030011600 | S.CER C1608 JB 1E 104K-T | B | 34.8/67.7 |
| C427 | 4030011600 | S.CER C1608 JB 1E 104K-T | B | 26.8/62.8 |
| C428 | 4030011600 | S.CER C1608 JB 1E 104K-T | B | 20.8/62.8 |
| C429 | 4030011600 | S.CER C1608 JB 1E 104K-T | B | 18.2/62.8 |
| C430 | 4030011600 | S.CER C1608 JB 1E 104K-T | B | 9.7/81.5 |
| C431 | 4030011600 | S.CER C1608 JB 1E 104K-T | B | 12.3/72.4 |
| C432 | 4030011600 | S.CER C1608 JB 1E 104K-T | B | 12.3/79 |
| C433 | 4030011600 | S.CER C1608 JB 1E 104K-T | B | 12.3/82.2 |
| C434 | 4030011600 | S.CER C1608 JB 1E 104K-T | B | 17.2/90.2 |
| C435 | 4030011600 | S.CER C1608 JB 1E 104K-T | B | 20.8/90.2 |
| C436 | 4030011600 | S.CER C1608 JB 1E 104K-T | B | 25.7/90.2 |
| C437 | 4030011600 | S.CER C1608 JB 1E 104K-T | B | 146.1/21.2 |
| C438 | 4030011600 | S.CER C1608 JB 1E 104K-T | B | 152.6/21.2 |
| C439 | 4030011600 | S.CER C1608 JB 1E 104K-T | B | 153/18.4 |
| C440 | 4010008500 | CER DEBB33D102KA2B | | |
| C601 | 4030011600 | S.CER C1608 JB 1E 104K-T | B | 169.4/51.4 |
| C602 | 4030011600 | S.CER C1608 JB 1E 104K-T | B | 169.1/57.7 |
| C603 | 4030011600 | S.CER C1608 JB 1E 104K-T | B | 79.6/44.7 |
| C604 | 4030011600 | S.CER C1608 JB 1E 104K-T | B | 99.9/36.7 |
| C605 | 4030011600 | S.CER C1608 JB 1E 104K-T | B | 102/21.3 |
| C606 | 4030011600 | S.CER C1608 JB 1E 104K-T | B | 83.2/16.8 |
| C607 | 4030011600 | S.CER C1608 JB 1E 104K-T | B | 81.5/16.8 |
| C608 | 4510008540 | S.ELE EEE1CA100SR | T | 67/16.3 |
| C609 | 4510008540 | S.ELE EEE1CA100SR | T | 62.4/34 |
| C610 | 4030006900 | S.CER C1608 JB 1H 103K-T | B | 71.2/19.5 |
| C611 | 4030006900 | S.CER C1608 JB 1H 103K-T | B | 71.2/20.8 |

## [LOGIC UNIT]

| REF NO. | ORDER NO. | DESCRIPTION | M. | H/V LOCATION |
|---|---|---|---|---|
| C612 | 4030007010 | S.CER C1608 CH 1H 100D-T | T | 80.9/16.9 |
| C613 | 4030007010 | S.CER C1608 CH 1H 100D-T | T | 83.5/16.9 |
| C614 | 4030011600 | S.CER C1608 JB 1E 104K-T | B | 86.2/14.2 |
| C615 | 4030006880 | S.CER C1608 JB 1H 472K-T | B | 71.2/31.2 |
| C616 | 4030006880 | S.CER C1608 JB 1H 472K-T | B | 71.2/29.9 |
| C617 | 4030006880 | S.CER C1608 JB 1H 472K-T | B | 71.2/28.6 |
| C618 | 4030006880 | S.CER C1608 JB 1H 472K-T | B | 71.2/27.3 |
| C619 | 4030006880 | S.CER C1608 JB 1H 472K-T | B | 71.2/26 |
| C620 | 4030006880 | S.CER C1608 JB 1H 472K-T | B | 71.2/24.7 |
| C621 | 4030006880 | S.CER C1608 JB 1H 472K-T | B | 71.2/23.4 |
| C622 | 4030006880 | S.CER C1608 JB 1H 472K-T | B | 71.2/22.1 |
| C623 | 4510008540 | S.ELE EEE1CA100SR | T | 178.6/62.5 |
| C624 | 4030011600 | S.CER C1608 JB 1E 104K-T | T | 174.9/60.6 |
| C625 | 4510008540 | S.ELE EEE1CA100SR | T | 184.7/62.5 |
| C626 | 4030011600 | S.CER C1608 JB 1E 104K-T | B | 63.7/20.3 |
| C627 | 4030011600 | S.CER C1608 JB 1E 104K-T | B | 60/20.3 |
| C628 | 4030011600 | S.CER C1608 JB 1E 104K-T | B | 73.6/39 |
| C629 | 4030011600 | S.CER C1608 JB 1E 104K-T | B | 57.2/39.8 |
| C630 | 4030011600 | S.CER C1608 JB 1E 104K-T | B | 150.9/51.7 |
| C631 | 4030011600 | S.CER C1608 JB 1E 104K-T | B | 148.9/48.1 |
| C632 | 4030011600 | S.CER C1608 JB 1E 104K-T | B | 131.8/66 |
| C633 | 4030011600 | S.CER C1608 JB 1E 104K-T | B | 138.2/66.7 |
| C634 | 4030011600 | S.CER C1608 JB 1E 104K-T | B | 150.9/58 |
| C635 | 4030011600 | S.CER C1608 JB 1E 104K-T | B | 131.1/58.5 |
| C636 | 4030011600 | S.CER C1608 JB 1E 104K-T | B | 131.1/52.1 |
| C801 | 4510008540 | S.ELE EEE1CA100SR | T | 141/114.6 |
| C802 | 4030011600 | S.CER C1608 JB 1E 104K-T | B | 138.5/110.6 |
| C803 | 4030011600 | S.CER C1608 JB 1E 104K-T | B | 138.5/113.3 |
| C804 | 4510008520 | S.ELE EEE1CA470SP | T | 147.2/113.8 |
| C805 | 4510008870 | S.ELE EEE1AA471UP | T | 100.2/110.4 |
| C806 | 4510008870 | S.ELE EEE1AA471UP | T | 109.5/110.4 |
| C807 | 4510008870 | S.ELE EEE1AA471UP | T | 119.4/100.6 |
| C808 | 4510008870 | S.ELE EEE1AA471UP | T | 119.9/109.6 |
| C809 | 4510008560 | S.ELE EEE1HAR47SR | T | 160/65.3 |
| C810 | 4510008560 | S.ELE EEE1HAR47SR | T | 166.6/65.3 |
| C811 | 4510008560 | S.ELE EEE1HAR47SR | T | 173.2/65.3 |
| C812 | 4030006860 | S.CER C1608 JB 1H 102K-T | B | 66.8/117.7 |
| C813 | 4030006860 | S.CER C1608 JB 1H 102K-T | B | 84.9/122.3 |
| C814 | 4030006860 | S.CER C1608 JB 1H 102K-T | B | 83.6/116.9 |
| C815 | 4030006860 | S.CER C1608 JB 1H 102K-T | T | 88.8/115.9 |
| C816 | 4030006860 | S.CER C1608 JB 1H 102K-T | B | 97.3/121.4 |
| C817 | 4030006860 | S.CER C1608 JB 1H 102K-T | B | 100.6/122.1 |
| C818 | 4030006860 | S.CER C1608 JB 1H 102K-T | B | 103.1/122.1 |
| C819 | 4030006860 | S.CER C1608 JB 1H 102K-T | B | 105.6/122.1 |
| C820 | 4030006860 | S.CER C1608 JB 1H 102K-T | B | 108.8/121.4 |
| C821 | 4510008520 | S.ELE EEE1CA470SP | T | 211/16 |
| C822 | 4510008500 | S.ELE EEE1CA101WP | T | 14.3/109.4 |
| C823 | 4030006880 | S.CER C1608 JB 1H 472K-T | B | 33.9/114.5 |
| C824 | 4030006860 | S.CER C1608 JB 1H 102K-T | T | 20/24.5 |
| C825 | 4030011600 | S.CER C1608 JB 1E 104K-T | B | 20.4/107.6 |
| C826 | 4030006860 | S.CER C1608 JB 1H 102K-T | T | 122.2/118.1 |
| C827 | 4030006860 | S.CER C1608 JB 1H 102K-T | T | 117.6/118.7 |
| C828 | 4030007130 | S.CER C1608 CH 1H 101J-T | T | 118.9/118.7 |
| C829 | 4030006860 | S.CER C1608 JB 1H 102K-T | T | 127.2/116 |
| C830 | 4030007130 | S.CER C1608 CH 1H 101J-T | T | 128.5/116 |
| C831 | 4030006860 | S.CER C1608 JB 1H 102K-T | T | 130.5/115.5 |
| C832 | 4030007130 | S.CER C1608 CH 1H 101J-T | T | 130.5/116.8 |
| C833 | 4030006860 | S.CER C1608 JB 1H 102K-T | T | 133.9/116 |
| C834 | 4030007130 | S.CER C1608 CH 1H 101J-T | T | 132.6/116 |
| C835 | 4030011600 | S.CER C1608 JB 1E 104K-T | T | 127.8/110.6 |
| C836 | 4510008540 | S.ELE EEE1CA100SR | T | 127.8/106 |
| C837 | 4030011600 | S.CER C1608 JB 1E 104K-T | T | 135.7/106.8 |
| C838 | 4510008540 | S.ELE EEE1CA100SR | T | 132.6/106 |
| C850 | 4030011600 | S.CER C1608 JB 1E 104K-T | B | 165/40.9 |
| C851 | 4510008540 | S.ELE EEE1CA100SR | T | 128/31.2 |
| C852 | 4030009490 | S.CER C1608 JB 1H 821K-T | B | 142.1/11.6 |
| C853 | 4030009490 | S.CER C1608 JB 1H 821K-T | B | 142.7/14.9 |
| C855 | 4510008540 | S.ELE EEE1CA100SR | T | 117.7/29.1 |
| C856 | 4030009490 | S.CER C1608 JB 1H 821K-T | B | 134.5/17.2 |
| C857 | 4030009490 | S.CER C1608 JB 1H 821K-T | B | 131.7/19.8 |
| C859 | 4510008540 | S.ELE EEE1CA100SR | T | 123.2/29.1 |
| C860 | 4030009490 | S.CER C1608 JB 1H 821K-T | B | 136.9/7.2 |
| C861 | 4030009490 | S.CER C1608 JB 1H 821K-T | B | 140.8/7.2 |
| C865 | 4510008540 | S.ELE EEE1CA100SR | T | 119.4/22.2 |
| C866 | 4030007160 | S.CER C1608 CH 1H 181J-T | B | 121/5 |
| C867 | 4030009880 | S.CER C1608 JB 1H 682K-T | T | 115.2/17.9 |
| C868 | 4030008880 | S.CER C1608 JB 1H 223K-T | T | 115.2/15.3 |
| C869 | 4510008540 | S.ELE EEE1CA100SR | T | 109.4/16.3 |
| C871 | 4510008540 | S.ELE EEE1CA100SR | T | 104.6/16.2 |
| C873 | 4030011600 | S.CER C1608 JB 1E 104K-T | B | 120.5/8.4 |
| C874 | 4030011600 | S.CER C1608 JB 1E 104K-T | B | 108.9/10.7 |
| C875 | 4510008540 | S.ELE EEE1CA100SR | T | 114.6/22.2 |
| C876 | 4510008540 | S.ELE EEE1CA100SR | T | 119/16.3 |
| C877 | 4030011600 | S.CER C1608 JB 1E 104K-T | B | 137.3/18.5 |
| C878 | 4030011600 | S.CER C1608 JB 1E 104K-T | B | 134.3/7.2 |
| C879 | 4510008540 | S.ELE EEE1CA100SR | T | 124.2/22.2 |
| C880 | 4510008540 | S.ELE EEE1CA100SR | T | 124.2/16.3 |
| C883 | 4510008560 | S.ELE EEE1HAR47SR | T | 184.7/67.3 |
| C884 | 4510008560 | S.ELE EEE1HAR47SR | T | 180.1/71.1 |
| C901 | 4510008540 | S.ELE EEE1CA100SR | T | 183.7/50.9 |
| C902 | 4510008540 | S.ELE EEE1CA100SR | T | 188.9/50.9 |
| C903 | 4030011600 | S.CER C1608 JB 1E 104K-T | B | 186.3/50.2 |
| C904 | 4030011600 | S.CER C1608 JB 1E 104K-T | B | 193.7/57.5 |
| C905 | 4510008540 | S.ELE EEE1CA100SR | T | 188.9/57 |
| C906 | 4510008540 | S.ELE EEE1CA100SR | T | 183.7/57 |
| C907 | 4030006860 | S.CER C1608 JB 1H 102K-T | B | 170.6/40.3 |
| C908 | 4030006860 | S.CER C1608 JB 1H 102K-T | B | 171.6/37.7 |
| C909 | 4030006860 | S.CER C1608 JB 1H 102K-T | B | 173.6/37.7 |
| C910 | 4030006860 | S.CER C1608 JB 1H 102K-T | B | 175.1/28.2 |
| C911 | 4030006860 | S.CER C1608 JB 1H 102K-T | B | 176.1/30.8 |
| C912 | 4030006860 | S.CER C1608 JB 1H 102K-T | B | 177.6/37.7 |
| C913 | 4030006860 | S.CER C1608 JB 1H 102K-T | B | 178.6/40.3 |
| C914 | 4030006860 | S.CER C1608 JB 1H 102K-T | B | 179.6/37.7 |
| C915 | 4030006860 | S.CER C1608 JB 1H 102K-T | B | 180.1/30.8 |

M.=Mounted side (T: Mounted on the Top side, B: Mounted on the Bottom side)
S.=Surface mount

## [LOGIC UNIT]

| REF NO. | ORDER NO. | DESCRIPTION | M. | H/V LOCATION |
|---|---|---|---|---|
| C916 | 4030006860 | S.CER C1608 JB 1H 102K-T | B | 180.6/40.3 |
| C917 | 4030006860 | S.CER C1608 JB 1H 102K-T | B | 181.1/28.2 |
| C918 | 4030006860 | S.CER C1608 JB 1H 102K-T | B | 182.1/30.8 |
| C919 | 4030006860 | S.CER C1608 JB 1H 102K-T | B | 182.6/40.3 |
| C920 | 4030006860 | S.CER C1608 JB 1H 102K-T | B | 183.1/28.2 |
| C921 | 4030006860 | S.CER C1608 JB 1H 102K-T | B | 183.6/37.7 |
| C922 | 4030006860 | S.CER C1608 JB 1H 102K-T | B | 184.1/30.8 |
| C923 | 4030006860 | S.CER C1608 JB 1H 102K-T | B | 133.7/37.7 |
| C924 | 4030006860 | S.CER C1608 JB 1H 102K-T | B | 134.7/40.3 |
| C925 | 4030006860 | S.CER C1608 JB 1H 102K-T | B | 135.7/37.7 |
| C926 | 4030006860 | S.CER C1608 JB 1H 102K-T | B | 136.2/30.8 |
| C927 | 4030006860 | S.CER C1608 JB 1H 102K-T | B | 136.7/40.3 |
| C928 | 4030006860 | S.CER C1608 JB 1H 102K-T | B | 137.2/25.5 |
| C929 | 4030006860 | S.CER C1608 JB 1H 102K-T | B | 137.7/37.7 |
| C930 | 4030006860 | S.CER C1608 JB 1H 102K-T | B | 138.2/28.1 |
| C931 | 4030006860 | S.CER C1608 JB 1H 102K-T | B | 138.7/40.3 |
| C932 | 4030006860 | S.CER C1608 JB 1H 102K-T | B | 139.2/25.5 |
| C933 | 4030006860 | S.CER C1608 JB 1H 102K-T | B | 139.7/37.7 |
| C934 | 4030006860 | S.CER C1608 JB 1H 102K-T | B | 140.2/28.1 |
| C935 | 4030006860 | S.CER C1608 JB 1H 102K-T | B | 140.7/40.3 |
| C936 | 4030006860 | S.CER C1608 JB 1H 102K-T | B | 141.2/25.5 |
| C937 | 4030006860 | S.CER C1608 JB 1H 102K-T | B | 141.7/37.7 |
| C938 | 4030006860 | S.CER C1608 JB 1H 102K-T | B | 142.2/22.9 |
| C939 | 4030006860 | S.CER C1608 JB 1H 102K-T | B | 142.7/40.3 |
| C940 | 4030006860 | S.CER C1608 JB 1H 102K-T | B | 143.2/25.5 |
| C941 | 4030006860 | S.CER C1608 JB 1H 102K-T | B | 144.2/22.9 |
| C942 | 4030006860 | S.CER C1608 JB 1H 102K-T | B | 146.2/30.8 |
| C943 | 4030006860 | S.CER C1608 JB 1H 102K-T | B | 147.2/28.3 |
| C944 | 4030006860 | S.CER C1608 JB 1H 102K-T | B | 148.2/30.9 |
| C945 | 4030006860 | S.CER C1608 JB 1H 102K-T | B | 150.2/28.3 |
| C946 | 4030006860 | S.CER C1608 JB 1H 102K-T | B | 151.2/30.9 |
| C947 | 4030006860 | S.CER C1608 JB 1H 102K-T | B | 214.5/84.7 |
| C948 | 4030006860 | S.CER C1608 JB 1H 102K-T | B | 220.6/81.7 |
| C949 | 4030006860 | S.CER C1608 JB 1H 102K-T | B | 223/91.7 |
| C950 | 4030006860 | S.CER C1608 JB 1H 102K-T | B | 220.6/94.3 |
| C951 | 4030006860 | S.CER C1608 JB 1H 102K-T | B | 214.5/92.7 |
| C952 | 4030006860 | S.CER C1608 JB 1H 102K-T | B | 213.6/72.3 |
| C953 | 4030006860 | S.CER C1608 JB 1H 102K-T | B | 211.5/76.1 |
| C954 | 4030006860 | S.CER C1608 JB 1H 102K-T | B | 205.7/77.8 |
| C955 | 4030006860 | S.CER C1608 JB 1H 102K-T | B | 211.5/79.5 |
| C956 | 4030006860 | S.CER C1608 JB 1H 102K-T | T | 21/113.9 |
| C957 | 4030006860 | S.CER C1608 JB 1H 102K-T | T | 24/113.9 |
| C958 | 4030006860 | S.CER C1608 JB 1H 102K-T | T | 27/113.9 |
| C959 | 4030006860 | S.CER C1608 JB 1H 102K-T | T | 30/113.8 |
| C960 | 4030006860 | S.CER C1608 JB 1H 102K-T | B | 180.6/79.6 |
| C961 | 4030006860 | S.CER C1608 JB 1H 102K-T | B | 183.2/90.3 |
| C962 | 4030006860 | S.CER C1608 JB 1H 102K-T | B | 187.7/90.3 |
| C963 | 4030006860 | S.CER C1608 JB 1H 102K-T | B | 188.7/81.7 |
| C964 | 4030006860 | S.CER C1608 JB 1H 102K-T | B | 193/81.7 |
| C965 | 4030006860 | S.CER C1608 JB 1H 102K-T | B | 193.7/90.3 |
| C966 | 4030006860 | S.CER C1608 JB 1H 102K-T | B | 194.9/78.8 |
| C967 | 4030006860 | S.CER C1608 JB 1H 102K-T | B | 222.7/78.7 |
| C968 | 4030006860 | S.CER C1608 JB 1H 102K-T | B | 228.7/79 |
| C969 | 4030006860 | S.CER C1608 JB 1H 102K-T | B | 222/74.4 |
| C970 | 4030006860 | S.CER C1608 JB 1H 102K-T | B | 229.9/74.4 |
| C971 | 4030006860 | S.CER C1608 JB 1H 102K-T | B | 220.9/49.2 |
| C972 | 4030006860 | S.CER C1608 JB 1H 102K-T | B | 229.5/50.2 |
| C973 | 4030006860 | S.CER C1608 JB 1H 102K-T | B | 227.1/62.2 |
| C974 | 4030006860 | S.CER C1608 JB 1H 102K-T | B | 218.4/63.2 |
| C975 | 4030006860 | S.CER C1608 JB 1H 102K-T | B | 227.1/66.7 |
| C976 | 4030006860 | S.CER C1608 JB 1H 102K-T | B | 218.4/68.1 |
| C977 | 4030006860 | S.CER C1608 JB 1H 102K-T | T | 181.7/23.9 |
| C978 | 4030006860 | S.CER C1608 JB 1H 102K-T | T | 159.4/23.6 |
| C979 | 4030006860 | S.CER C1608 JB 1H 102K-T | T | 190.4/18.9 |
| C980 | 4030006860 | S.CER C1608 JB 1H 102K-T | T | 188.7/24.5 |
| C981 | 4030006860 | S.CER C1608 JB 1H 102K-T | T | 166.1/22.6 |
| C982 | 4030006860 | S.CER C1608 JB 1H 102K-T | T | 173.3/42.7 |
| C983 | 4030011600 | S.CER C1608 JB 1E 104K-T | T | 180.7/84.3 |
| C984 | 4030010210 | S.CER C3216 JB 1C 105M-T | B | 198.6/85.6 |
| C985 | 4030011600 | S.CER C1608 JB 1E 104K-T | T | 195.5/83.6 |
| C991 | 4030006880 | S.CER C1608 JB 1H 472K-T | T | 208.4/92 |
| C992 | 4030006880 | S.CER C1608 JB 1H 472K-T | T | 208.4/94 |
| C993 | 4030006880 | S.CER C1608 JB 1H 472K-T | T | 220.2/93 |
| C994 | 4030006880 | S.CER C1608 JB 1H 472K-T | T | 220.2/81.4 |
| C995 | 4030006880 | S.CER C1608 JB 1H 472K-T | T | 208.3/80 |
| C996 | 4030006880 | S.CER C1608 JB 1H 472K-T | T | 220.2/78.6 |
| C997 | 4030006880 | S.CER C1608 JB 1H 472K-T | T | 218.4/73.2 |
| | | | | |
| J1 | 6510022490 | S.CNR AXK5S30045P | T | 40/98 |
| J2 | 6510019870 | S.CNR AXK5S40045P | T | 85/98 |
| J51 | 6910014251 | CNR IMSA-9202B-2-06Z041-PT1 | | |
| J102 | 6510019981 | S.CNR 52808-1671 (1690) | T | 72.5/40 |
| J602 | 6510019971 | S.CNR 52808-1071 | T | 95.5/14.5 |
| J604 | 6510019971 | S.CNR 52808-1071 | T | 72.5/23 |
| J802 | 6510024261 | S.CNR S9B-PH-SM4-TB (LF) (SN) | T | 158.5/5 |
| J803 | 6510024401 | CNR S11B-EH (LF) (SN) | | |
| J804 | 6510024251 | S.CNR S5B-PH-SM4-TB (LF) (SN) | T | 213.2/5 |
| J805 | 6510024111 | S.CNR 52793-2070 (2090) | T | 129.5/123.9 |
| J806 | 6510024131 | S.CNR IMSA-9637S-40Y905 | T | 193/4.7 |
| J807 | 6510024151 | S.CNR 50FY-BMT-TB (LF) (SN) | T | 53.6/22 |
| J808 | 6510022471 | S.CNR 40FLT-SM2-TB (LF) (SN) | T | 175.3/34.3 |
| J809 | 6510022471 | S.CNR 40FLT-SM2-TB (LF) (SN) | T | 143.4/34.3 |
| J810 | 6510022731 | S.CNR S13B-PH-SM4-TB (LF) (SN) | T | 120/7 |
| J811 | 6510021561 | S.CNR 52808-2470 (2490) | T | 214.3/84.5 |
| J812 | 6510020701 | S.CNR 52793-1270 (1290) | T | 19.5/123.9 |
| J813 | 6510020081 | S.CNR 52808-2071 (2090) | T | 189/89.8 |
| J814 | 6510019971 | S.CNR 52808-1071 | T | 229/79.5 |
| J815 | 6510019991 | S.CNR 52808-2271 (2291) | T | 229/58 |
| J816 | 6510019991 | S.CNR 52808-2271 (2291) | T | 171.2/17.5 |
| J820 | 6510003581 | CNR S10B-EH-S (LF) (SN) | | |
| J821 | 6510003551 | CNR S07B-EH-S (LF) (SN) | | |
| J822 | 6510021601 | S.CNR S2B-PH-SM4-TB (LF) (SN) | T | 15.5/18 |
| J823 | 6510021601 | S.CNR S2B-PH-SM4-TB (LF) (SN) | T | 53.8/122.6 |

## [LOGIC UNIT]

| REF NO. | ORDER NO. | DESCRIPTION | M. | H/V LOCATION |
|---|---|---|---|---|
| J824 | 6510024100 | CNR SC25-02WL | | |
| J825 | 6510019421 | S.CNR B8B-ZR-SM4-TF (LF) (SN) | T | 29.4/20.8 |
| J826 | 6510023801 | S.CNR S4B-ZR-SM4A-TF (LF) (SN) | T | 141.3/4.5 |
| | | | | |
| DS401 | 5040002930 | S.LED SML-512MW T86 | T | 11.9/96.4 |
| DS402 | 5040002930 | S.LED SML-512MW T86 | T | 11.9/94.9 |
| DS403 | 5040002930 | S.LED SML-512MW T86 | T | 11.9/93.1 |
| | | | | |
| S51 | 2260001890 | S.SW SKQDPA | T | 142.6/106.8 |
| | | | | |
| T401 | 5920000841 | S.TSM H1102NL | T | 150/20 |
| | | | | |
| EP101 | 6910013310 | S.BEA MMZ1608D121B | T | 3.6/74.9 |
| EP102 | 6910013310 | S.BEA MMZ1608D121B | T | 10.3/80.5 |
| EP103 | 6910013310 | S.BEA MMZ1608D121B | T | 14.9/80.7 |
| EP201 | 6910012350 | S.BEA MMZ1608Y 102BT | T | 201.5/22.1 |
| EP202 | 6910012350 | S.BEA MMZ1608Y 102BT | T | 198.3/28 |
| EP203 | 6910012350 | S.BEA MMZ1608Y 102BT | T | 83.7/86.4 |
| EP204 | 6910012350 | S.BEA MMZ1608Y 102BT | T | 79.6/72.4 |
| EP401 | 6910013310 | S.BEA MMZ1608D121B | T | 19.4/79.6 |
| EP402 | 6910013310 | S.BEA MMZ1608D121B | T | 17.3/75.6 |
| EP403 | 6910013310 | S.BEA MMZ1608D121B | T | 19.4/82.5 |
| EP801 | 6910013310 | S.BEA MMZ1608D121B | T | 204.4/9.8 |
| EP802 | 6910013310 | S.BEA MMZ1608D121B | T | 202.1/10.6 |
| EP803 | 6910013310 | S.BEA MMZ1608D121B | T | 200.8/10.6 |
| EP804 | 6910013310 | S.BEA MMZ1608D121B | T | 199.5/10.6 |
| EP805 | 6910013310 | S.BEA MMZ1608D121B | B | 201.4/8.2 |
| EP806 | 6910013310 | S.BEA MMZ1608D121B | T | 198.2/10.6 |
| EP807 | 6910013310 | S.BEA MMZ1608D121B | B | 200.1/8.2 |
| EP808 | 6910013310 | S.BEA MMZ1608D121B | T | 196.9/10.6 |
| EP809 | 6910013310 | S.BEA MMZ1608D121B | B | 198.8/8.2 |
| EP810 | 6910013310 | S.BEA MMZ1608D121B | T | 195.6/10.6 |
| EP811 | 6910013310 | S.BEA MMZ1608D121B | B | 197.5/8.2 |
| EP812 | 6910013310 | S.BEA MMZ1608D121B | B | 196.2/8.2 |
| EP813 | 6910013310 | S.BEA MMZ1608D121B | T | 194.3/10.6 |
| EP814 | 6910013310 | S.BEA MMZ1608D121B | T | 193/10.6 |
| EP815 | 6910013310 | S.BEA MMZ1608D121B | T | 191.7/10.9 |
| EP816 | 6910013310 | S.BEA MMZ1608D121B | T | 190.4/11.6 |
| EP817 | 6910013310 | S.BEA MMZ1608D121B | T | 189.1/12.3 |
| EP818 | 6910013310 | S.BEA MMZ1608D121B | T | 187.8/12 |
| EP819 | 6910013310 | S.BEA MMZ1608D121B | T | 186.5/11.6 |
| EP820 | 6910013310 | S.BEA MMZ1608D121B | T | 183.5/10 |
| EP821 | 6910015980 | S.BEA MMZ1608S 181CT-AS | T | 71.1/116.5 |
| EP822 | 6910015980 | S.BEA MMZ1608S 181CT-AS | T | 72.5/116.5 |
| EP826 | 6910012350 | S.BEA MMZ1608Y 102BT | T | 133.2/118.1 |
| EP827 | 6910012350 | S.BEA MMZ1608Y 102BT | B | 137.3/124.5 |
| EP828 | 6910012350 | S.BEA MMZ1608Y 102BT | B | 137.3/123.1 |
| EP829 | 6910012350 | S.BEA MMZ1608Y 102BT | T | 135.2/117.3 |
| EP972 | 6910015970 | S.BEA MMZ1608B 301CT-AS | T | 139/11.1 |
| EP973 | 6910015970 | S.BEA MMZ1608B 301CT-AS | T | 142/11.1 |
| EP996 | 6910015970 | S.BEA MMZ1608B 301CT-AS | B | 188.5/92.1 |
| EP997 | 6910015970 | S.BEA MMZ1608B 301CT-AS | B | 189.5/83.5 |
| EP1001 | 6910015970 | S.BEA MMZ1608B 301CT-AS | B | 193.5/83.5 |
| EP1002 | 6910015970 | S.BEA MMZ1608B 301CT-AS | B | 194.5/92.1 |
| EP1101 | 6910013310 | S.BEA MMZ1608D121B | T | 39.4/13.9 |
| EP1102 | 6910013310 | S.BEA MMZ1608D121B | T | 40.1/16.6 |
| EP1103 | 6910013310 | S.BEA MMZ1608D121B | T | 40.8/13.9 |
| EP1104 | 6910013310 | S.BEA MMZ1608D121B | T | 41.5/16.6 |
| EP1105 | 6910013310 | S.BEA MMZ1608D121B | T | 42.2/13.9 |
| EP1106 | 6910013310 | S.BEA MMZ1608D121B | T | 42.9/16.6 |
| EP1107 | 6910013310 | S.BEA MMZ1608D121B | T | 43.6/13.9 |
| EP1108 | 6910013310 | S.BEA MMZ1608D121B | T | 44.3/16.6 |
| EP1109 | 6910013310 | S.BEA MMZ1608D121B | T | 45/13.9 |
| EP1110 | 6910013310 | S.BEA MMZ1608D121B | T | 45.7/16.6 |
| EP1111 | 6910013310 | S.BEA MMZ1608D121B | T | 46.4/13.9 |
| EP1112 | 6910013310 | S.BEA MMZ1608D121B | T | 47.1/16.6 |
| EP1113 | 6910013310 | S.BEA MMZ1608D121B | T | 47.8/13.9 |
| EP1114 | 6910013310 | S.BEA MMZ1608D121B | T | 48.5/16.6 |
| EP1115 | 6910013310 | S.BEA MMZ1608D121B | T | 49.2/13.9 |
| EP1116 | 6910013310 | S.BEA MMZ1608D121B | T | 49.9/16.6 |
| EP1117 | 6910013310 | S.BEA MMZ1608D121B | T | 50.6/13.9 |
| EP1118 | 6910013310 | S.BEA MMZ1608D121B | T | 51.3/16.6 |
| EP1119 | 6910013310 | S.BEA MMZ1608D121B | T | 52/13.9 |
| EP1120 | 6910013310 | S.BEA MMZ1608D121B | T | 52.7/16.6 |
| EP1121 | 6910013310 | S.BEA MMZ1608D121B | T | 53.4/13.9 |
| EP1122 | 6910013310 | S.BEA MMZ1608D121B | T | 54.1/16.6 |
| EP1123 | 6910013310 | S.BEA MMZ1608D121B | T | 54.8/13.9 |
| EP1124 | 6910013310 | S.BEA MMZ1608D121B | T | 42.8/29.6 |
| EP1125 | 6910013310 | S.BEA MMZ1608D121B | T | 43.5/27 |
| EP1126 | 6910013310 | S.BEA MMZ1608D121B | T | 44.2/29.6 |
| EP1127 | 6910013310 | S.BEA MMZ1608D121B | T | 44.9/27 |
| EP1128 | 6910013310 | S.BEA MMZ1608D121B | T | 45.6/29.6 |
| EP1129 | 6910013310 | S.BEA MMZ1608D121B | T | 46.3/27 |
| EP1130 | 6910013310 | S.BEA MMZ1608D121B | T | 47/29.6 |
| EP1131 | 6910013310 | S.BEA MMZ1608D121B | T | 47.7/27 |
| EP1132 | 6910013310 | S.BEA MMZ1608D121B | T | 48.4/29.6 |
| EP1133 | 6910013310 | S.BEA MMZ1608D121B | T | 49.1/27 |
| EP1134 | 6910013310 | S.BEA MMZ1608D121B | T | 49.8/29.6 |
| EP1135 | 6910013310 | S.BEA MMZ1608D121B | T | 50.5/27 |
| EP1136 | 6910013310 | S.BEA MMZ1608D121B | T | 51.2/29.6 |
| EP1137 | 6910013310 | S.BEA MMZ1608D121B | T | 51.9/27 |
| EP1138 | 6910013310 | S.BEA MMZ1608D121B | T | 52.6/29.6 |
| EP1139 | 6910013310 | S.BEA MMZ1608D121B | T | 53.3/27 |
| EP1140 | 6910013310 | S.BEA MMZ1608D121B | T | 54/29.6 |
| EP1141 | 6910013310 | S.BEA MMZ1608D121B | T | 54.7/27 |
| EP1142 | 6910013310 | S.BEA MMZ1608D121B | T | 55.4/29.6 |
| EP1143 | 6910013310 | S.BEA MMZ1608D121B | T | 56.1/27 |
| EP1144 | 6910013310 | S.BEA MMZ1608D121B | T | 56.8/29.6 |
| EP1145 | 6910013310 | S.BEA MMZ1608D121B | T | 57.5/27 |
| EP1146 | 6910013310 | S.BEA MMZ1608D121B | T | 58.2/29.6 |

M.=Mounted side (T: Mounted on the Top side, B: Mounted on the Bottom side)
S.=Surface mount

## [PA UNIT]

| REF NO. | ORDER NO. | DESCRIPTION | | M. | H/V LOCATION |
|---|---|---|---|---|---|
| MF1 | 2710000770 | FAN | FCB34AC12A | | |
| W1 | 8900012790 | CBL | OPC-1299 | | |

## [PA200W BOARD]

| REF NO. | ORDER NO. | DESCRIPTION | | M. | H/V LOCATION |
|---|---|---|---|---|---|
| IC2 | 1180001541 | S.IC | TA78L08F (TE12L,F) | T | 58.8/15.1 |
| Q1 | 1520000531 | S.TR | 2SB1119S-TD-E | T | 42.8/19.2 |
| Q2 | 1590000680 | S.TR | DTC114EUA T106 | T | 45.8/13.5 |
| Q101 | 1560001241 | S.FET | RD01MUS1-T113 | T | 5.9/66.4 |
| Q201 | 1590003051 | S.FET | PD55003-E | T | 20.5/53.1 |
| Q301 | 1590003350 | S.FET | SD2918 | T | 64/45.8 |
| Q401 | 1590003361 | FET | SD2931-12 | | |
| Q402 | 1590003361 | FET | SD2931-12 | | |
| D1 | 1730000561 | S.ZEN | RD2.7M-T2B-A B1 | T | 100.6/22.8 |
| D401 | 1750000271 | S.DIO | 1SS301 (TE85L,F) | T | 116.8/99.1 |
| D402 | 1750000271 | S.DIO | 1SS301 (TE85L,F) | T | 118.3/35.9 |
| D403 | 1750000271 | S.DIO | 1SS301 (TE85L,F) | T | 104/98.3 |
| D404 | 1750000271 | S.DIO | 1SS301 (TE85L,F) | T | 104/35.7 |
| L1 | 6200005011 | S.COL | NLV25T-100J | T | 14.7/18 |
| L2 | 6200005011 | S.COL | NLV25T-100J | T | 14.7/20.5 |
| L3 | 6200005011 | S.COL | NLV25T-100J | T | 14.7/23 |
| L6 | 6200005011 | S.COL | NLV25T-100J | T | 14.7/25.5 |
| L7 | 6200010881 | S.COL | CDRH124NP-330MC | T | 77.3/11 |
| L101 | 6200005131 | S.COL | NLC453232T-101K-PF | T | 5.6/59.6 |
| L102 | 6200007220 | S.COL | EXCCL4532U1 | T | 6/38.4 |
| L201 | 6180001240 | COL | LAL 04NA 820K | | |
| L202 | 6140004350 | COL | LR-475 | | |
| L301 | 6200003261 | S.COL | NLV32T-101J | T | 46.1/36.4 |
| L303 | 6200001831 | S.COL | NLV32T-100J | T | 86.9/26.2 |
| L304 | 2040000490 | COL | EXC-ELDR25C | | |
| L305 | 2040000490 | COL | EXC-ELDR25C | | |
| L306 | 6140004340 | COL | LR-474 | | |
| L307 | 6200001831 | S.COL | NLV32T-100J | T | 75.7/100.2 |
| L401 | 6200003261 | S.COL | NLV32T-101J | T | 100.4/98.3 |
| L402 | 6200003261 | S.COL | NLV32T-101J | T | 100.1/35.8 |
| L403 | 6140002590 | COL | LR-296 (TR18X8X8 D12A) | | |
| L404 | 6140000720 | S.COL | LR-95 | T | 166.4/67 |
| L501 | 6140002030 | COL | LR-230 (SK-10M-15Y 120) | | |
| R1 | 7030003440 | S.RES | ERJ3GEYJ 102 V (1 k) | T | 42.8/12.8 |
| R2 | 7030003560 | S.RES | ERJ3GEYJ 103 V (10 k) | T | 42.8/14.2 |
| R3 | 7510001740 | TMR | DTN-C103F3H-STS-40 | | |
| R4 | 7030000380 | S.RES | MCR10EZHJ 1 k | T | 39.7/22.5 |
| R5 | 7030008061 | S.RES | ERA3YED 222V (2.2 k) | T | 104.3/23.1 |
| R6 | 7030007210 | S.RES | ERA3YEB 102V (1 k) | T | 103.6/16.5 |
| R7 | 7030007210 | S.RES | ERA3YEB 102V (1 k) | T | 103.6/17.8 |
| R101 | 7030003370 | S.RES | ERJ3GEYJ 271 V (270) | T | 6/87.2 |
| R102 | 7030003220 | S.RES | ERJ3GEYJ 150 V (15) | T | 3.9/86.1 |
| R103 | 7030003370 | S.RES | ERJ3GEYJ 271 V (270) | T | 6/85 |
| R104 | 7030003360 | S.RES | ERJ3GEYJ 221 V (220) | T | 4.8/71.3 |
| R105 | 7030003430 | S.RES | ERJ3GEYJ 821 V (820) | T | 6/73.3 |
| R106 | 7030003480 | S.RES | ERJ3GEYJ 222 V (2.2 k) | T | 9.2/73.8 |
| R107 | 7030003440 | S.RES | ERJ3GEYJ 102 V (1 k) | T | 2.2/64.7 |
| R108 | 7030003200 | S.RES | ERJ3GEYJ 100 V (10) | T | 9.2/68.3 |
| R110 | 7030000230 | S.RES | MCR10EZHJ 56 (560) | T | 11.3/56.6 |
| R111 | 7030003420 | S.RES | ERJ3GEYJ 681 V (680) | T | 13.3/58.6 |
| R112 | 7030003510 | S.RES | ERJ3GEYJ 392 V (3.9 k) | T | 12.6/60.6 |
| R113 | 7030003500 | S.RES | ERJ3GEYJ 332 V (3.3 k) | T | 6.8/75.2 |
| R115 | 7030003520 | S.RES | ERJ3GEYJ 472 V (4.7 k) | T | 13.1/40.8 |
| R117 | 7030003530 | S.RES | ERJ3GEYJ 562 V (5.6 k) | T | 7.7/76.5 |
| R118 | 7030003550 | S.RES | ERJ3GEYJ 822 V (8.2 k) | T | 11.7/40.8 |
| R119 | 7030008240 | S.RES | ERJ12Y0R00U | T | 5/49.6 |
| R201 | 7030004050 | S.RES | ERJ3GEYJ 1R0 V (1) | T | 13.8/48.6 |
| R202 | 7030003410 | S.RES | ERJ3GEYJ 561 V (560) | T | 23.1/43.1 |
| R203 | 7030010800 | S.RES | ERJ1TYJ 2R7U (2.7) | T | 18.4/65.5 |
| R205 | 7030006260 | S.RES | ERJ12YJ471U (470) | T | 30.3/55.7 |
| R301 | 7310005210 | TRI | VM5CK-PVB 20 k | | |
| R302 | 7030008180 | S.RES | ERJ12YJ331U (330) | T | 48.3/40.6 |
| R305 | 7030003530 | S.RES | ERJ3GEYJ 562 V (5.6 k) | T | 49.6/43.5 |
| R307 | 7070000830 | RES | ERG3SJ 101 (100) | | |
| R309 | 7030010570 | S.RES | ERJ1TYJ 4R7U (4.7) | T | 80/45.8 |
| R310 | 7310005200 | TRI | VM5CK-PVB 2 k | | |
| R312 | 7070000830 | RES | ERG3SJ 101 (100) | | |
| R401 | 7030010960 | S.RES | ERJ1TYJ 120U (12) | T | 89.8/90.7 |
| R402 | 7030010960 | S.RES | ERJ1TYJ 120U (12) | T | 93.5/90.7 |
| R403 | 7030010960 | S.RES | ERJ1TYJ 120U (12) | T | 97.2/90.7 |
| R404 | 7030010960 | S.RES | ERJ1TYJ 120U (12) | T | 90.8/43.3 |
| R405 | 7030010960 | S.RES | ERJ1TYJ 120U (12) | T | 94.5/43.3 |
| R406 | 7030010960 | S.RES | ERJ1TYJ 120U (12) | T | 98.2/43.3 |
| R407 | 7310005230 | TRI | VM5CK-PVB 10 k | | |
| R408 | 7030000420 | S.RES | MCR10EZHJ 2.2 k | T | 116.3/96 |
| R409 | 7030000420 | S.RES | MCR10EZHJ 2.2 k | T | 116.3/38 |
| R410 | 7310005230 | TRI | VM5CK-PVB 10 k | | |
| R411 | 7030010520 | S.RES | ERJ1TYJ 101U (100) | T | 107.6/93.9 |
| R412 | 7030010520 | S.RES | ERJ1TYJ 101U (100) | T | 107.5/40.2 |
| R413 | 7030010520 | S.RES | ERJ1TYJ 101U (100) | T | 111.3/93.9 |
| R414 | 7030010520 | S.RES | ERJ1TYJ 101U (100) | T | 111.2/40.2 |
| R416 | 7070000890 | RES | ERG3SJ 150 (15) | | |
| R418 | 7070001190 | RES | ERG3SJ180 (18) | | |
| R420 | 7070000890 | RES | ERG3SJ 150 (15) | | |
| R422 | 7070001190 | RES | ERG3SJ180 (18) | | |
| R423 | 7030003460 | S.RES | ERJ3GEYJ 152 V (1.5 k) | T | 95.9/98.4 |
| R424 | 7030003460 | S.RES | ERJ3GEYJ 152 V (1.5 k) | T | 99.4/33.6 |
| R425 | 7310005200 | TRI | VM5CK-PVB 2 k | | |
| R426 | 7310005200 | TRI | VM5CK-PVB 2 k | | |

## [PA200W BOARD]

| REF NO. | ORDER NO. | DESCRIPTION | | M. | H/V LOCATION |
|---|---|---|---|---|---|
| R427 | 7070001200 | RES | ERG3SJ100P (10) | | |
| R501 | 7070000890 | RES | ERG3SJ 150 (15) | | |
| R502 | 7070000890 | RES | ERG3SJ 150 (15) | | |
| R503 | 7030003500 | S.RES | ERJ3GEYJ 332 V (3.3 k) | T | 171.8/16.7 |
| R504 | 7030003500 | S.RES | ERJ3GEYJ 332 V (3.3 k) | T | 169.9/15.9 |
| R507 | 7030003500 | S.RES | ERJ3GEYJ 332 V (3.3 k) | T | 139.1/17.9 |
| R508 | 7030003500 | S.RES | ERJ3GEYJ 332 V (3.3 k) | T | 137.3/19.2 |
| R511 | 7070000890 | RES | ERG3SJ 150 (15) | | |
| R512 | 7070000890 | RES | ERG3SJ 150 (15) | | |
| R513 | 7070001000 | RES | ERG3SJ 821 (820) | | |
| R514 | 7070001000 | RES | ERG3SJ 821 (820) | | |
| R521 | 7030011160 | S.RES | RL7520WT-R010-F | T | 165.2/20.2 |
| R522 | 7030011160 | S.RES | RL7520WT-R010-F | T | 159.6/20.2 |
| R523 | 7030011160 | S.RES | RL7520WT-R010-F | T | 154/20.2 |
| C1 | 4030011600 | S.CER | C1608 JB 1E 104K-T | T | 18.9/18 |
| C2 | 4030006880 | S.CER | C1608 JB 1H 472K-T | T | 18.9/20.5 |
| C3 | 4030006880 | S.CER | C1608 JB 1H 472K-T | T | 18.9/23 |
| C6 | 4030006880 | S.CER | C1608 JB 1H 472K-T | T | 18.9/25.5 |
| C7 | 4030006900 | S.CER | C1608 JB 1H 103K-T | T | 70/6.8 |
| C8 | 4030006880 | S.CER | C1608 JB 1H 472K-T | T | 42.8/15.6 |
| C9 | 4030011600 | S.CER | C1608 JB 1E 104K-T | T | 57.6/11.4 |
| C10 | 4510008520 | S.ELE | EEE1CA470SP | T | 52/15.5 |
| C11 | 4030006900 | S.CER | C1608 JB 1H 103K-T | T | 60.4/11.4 |
| C12 | 4510008520 | S.ELE | EEE1CA470SP | T | 64.9/15.5 |
| C15 | 4030006880 | S.CER | C1608 JB 1H 472K-T | T | 104.3/20.4 |
| C16 | 4030006880 | S.CER | C1608 JB 1H 472K-T | T | 103/23.1 |
| C17 | 4510008550 | S.ELE | EEE1HA010SR | T | 95.9/22.8 |
| C102 | 4030017810 | S.CER | C1608 CH 1H 102J-T | T | 4.1/76.2 |
| C103 | 4030011600 | S.CER | C1608 JB 1E 104K-T | T | 9.2/72.5 |
| C104 | 4030011600 | S.CER | C1608 JB 1E 104K-T | T | 9.5/75.2 |
| C106 | 4030017320 | S.CER | GRM21BB11H104KA01 | T | 2.2/67.7 |
| C107 | 4030011600 | S.CER | C1608 JB 1E 104K-T | T | 9.2/70.9 |
| C108 | 4030017810 | S.CER | C1608 CH 1H 102J-T | T | 9.2/69.6 |
| C109 | 4030017320 | S.CER | GRM21BB11H104KA01L | T | 8.1/62.6 |
| C110 | 4030017810 | S.CER | C1608 CH 1H 102J-T | T | 9/64.2 |
| C111 | 4030017810 | S.CER | C1608 CH 1H 102J-T | T | 9/56.4 |
| C112 | 4030017320 | S.CER | GRM21BB11H104KA01L | T | 8.7/54.8 |
| C113 | 4030011600 | S.CER | C1608 JB 1E 104K-T | T | 5.3/102.4 |
| C114 | 4030011600 | S.CER | C1608 JB 1E 104K-T | T | 13.9/60.6 |
| C201 | 4030017320 | S.CER | GRM21BB11H104KA01L | T | 18.2/43.1 |
| C202 | 4030017810 | S.CER | C1608 CH 1H 102J-T | T | 15.7/61.3 |
| C204 | 4030008490 | S.CER | C2012 JB 1H 682K-T | T | 31.2/61.6 |
| C206 | 4030008700 | S.CER | GRM21BB11H473KA01L | T | 29.3/61.6 |
| C207 | 4030008700 | S.CER | GRM21BB11H473KA01L | T | 34.4/36.7 |
| C301 | 4030004760 | S.CER | C2012 JF 1H 104Z-T | T | 49.4/45.5 |
| C303 | 4030011600 | S.CER | C1608 JB 1E 104K-T | T | 43.4/35.4 |
| C305 | 4030004760 | S.CER | C2012 JF 1H 104Z-T | T | 44.4/42.6 |
| C307 | 4030017810 | S.CER | C1608 CH 1H 102J-T | T | 39.7/31.7 |
| C309 | 4030011600 | S.CER | C1608 JB 1E 104K-T | T | 41.1/31.7 |
| C311 | 4030018750 | S.CER | C3225 CH 2J 682K-T | T | 54.1/58.9 |
| C313 | 4030011600 | S.CER | C1608 JB 1E 104K-T | T | 89.1/26.9 |
| C314 | 4510008050 | ELE | 63 ME 220 CZ | | |
| C317 | 4030018790 | S.CER | C3225 JB 2E 104K-T | T | 76.8/34 |
| C318 | 4030011600 | S.CER | C1608 JB 1E 104K-T | T | 77.2/96.7 |
| C319 | 4030018790 | S.CER | C3225 JB 2E 104K-T | T | 70.4/79 |
| C401 | 4030011790 | S.CER | GRM55RF52A684ZD01L | T | 92.4/82.2 |
| C402 | 4030011790 | S.CER | GRM55RF52A684ZD01L | T | 92.4/51.8 |
| C403 | 4030011600 | S.CER | C1608 JB 1E 104K-T | T | 79.9/100.1 |
| C404 | 4030011600 | S.CER | C1608 JB 1E 104K-T | T | 88.6/30.3 |
| C405 | 4030006900 | S.CER | C1608 JB 1H 103K-T | T | 79.9/98.8 |
| C406 | 4030006900 | S.CER | C1608 JB 1H 103K-T | T | 88.6/31.6 |
| C407 | 4030017810 | S.CER | C1608 CH 1H 102J-T | T | 79.9/97.5 |
| C408 | 4030017810 | S.CER | C1608 CH 1H 102J-T | T | 88.6/32.9 |
| C409 | 4030018790 | S.CER | C3225 JB 2E 104K-T | T | 111.3/100.2 |
| C410 | 4030018790 | S.CER | C3225 JB 2E 104K-T | T | 111.2/33.9 |
| C411 | 4030006880 | S.CER | C1608 JB 1H 472K-T | T | 114.9/99.1 |
| C412 | 4030006880 | S.CER | C1608 JB 1H 472K-T | T | 116.3/35 |
| C413 | 4030011600 | S.CER | C1608 JB 1E 104K-T | T | 97.8/99.1 |
| C414 | 4030011600 | S.CER | C1608 JB 1E 104K-T | T | 97.4/36.5 |
| C415 | 4030011790 | S.CER | GRM55RF52A684ZD01L | T | 102.8/88.8 |
| C416 | 4030011790 | S.CER | GRM55RF52A684ZD01L | T | 103.8/49 |
| C417 | 4030018760 | S.CER | C4532 CH 2A 104K-T | T | 190.2/82.6 |
| C418 | 4030018760 | S.CER | C4532 CH 2A 104K-T | T | 193.9/82.6 |
| C419 | 4030018760 | S.CER | C4532 CH 2A 104K-T | T | 190.2/53.4 |
| C420 | 4030018760 | S.CER | C4532 CH 2A 104K-T | T | 193.9/53.4 |
| C501 | 4030018790 | S.CER | C3225 JB 2E 104K-T | T | 183.8/32 |
| C502 | 4030018780 | S.CER | C3225 JB 2J 473K-T | T | 180.4/32 |
| C503 | 4030018770 | S.CER | C3216 CH 2J 102J-T | T | 177.3/32 |
| C504 | 4510006830 | ELE | 63 ME 470CZ | | |
| C505 | 4510006830 | ELE | 63 ME 470CZ | | |
| C506 | 4030006880 | S.CER | C1608 JB 1H 472K-T | T | 173.7/15.9 |
| C507 | 4030006880 | S.CER | C1608 JB 1H 472K-T | T | 137.2/17 |
| C510 | 4030018790 | S.CER | C3225 JB 2E 104K-T | T | 170.2/13.6 |
| C511 | 4030018780 | S.CER | C3225 JB 2J 473K-T | T | 170.2/10.6 |
| C512 | 4030018770 | S.CER | C3216 CH 2J 102J-T | T | 169.9/7.2 |
| C513 | 4510008050 | ELE | 63 ME 220 CZ | | |
| C514 | 4030011790 | S.CER | GRM55RF52A684ZD01L | T | 164.8/6.7 |
| C515 | 4030011790 | S.CER | GRM55RF52A684ZD01L | T | 148.4/6.6 |
| J1 | 6510007020 | CNR | TMP-J01X-V6 | | |
| J2 | 6510022311 | S.CNR | B5B-PH-SM4-TB (LF) (SN) | T | 6/23 |
| J5 | 6510020421 | S.CNR | S4B-PH-SM4-TB (LF) (SN) | T | 93/4.5 |
| J401 | 6510017920 | CNR | 1811P342 | | |
| J402 | 6910001040 | CNR | IPS-1136 | | |
| W401 | 9025900670 | WIR | 23/05/060/B21/W07 | | |
| W501 | 9040401001 | JMP | 74/98/050/X98/X98 | | |
| EP501 | 6910011330 | TER | OT-009 M3 | | |
| EP502 | 6910011330 | TER | OT-009 M3 | | |
| EP503 | 6910000640 | BEA | FSRH090160RN000B | | |

M.=Mounted side (T: Mounted on the Top side, B: Mounted on the Bottom side)
S.=Surface mount

## [DC-DC UNIT]

| REF NO. | ORDER NO. | DESCRIPTION | | M. | H/V LOCATION |
|---|---|---|---|---|---|
| IC21 | 1180002510 | S.REG | LM2673S-3.3 | T | 130/20.9 |
| IC41 | 1180002510 | S.REG | LM2673S-3.3 | T | 97.6/94.7 |
| IC61 | 1180002520 | S.REG | LM2673S-5.0 | T | 97.6/59.8 |
| IC81 | 1180002520 | S.REG | LM2673S-5.0 | T | 38/13.5 |
| IC101 | 1180002500 | S.REG | LM2673S-ADJ | T | 96.6/26.6 |
| IC121 | 1180002530 | S.REG | LM2594M-12 | T | 128.6/69.2 |
| Q141 | 1590003310 | S.TR | DTD113ZK T146 | T | 7.8/95.4 |
| D21 | 1750000960 | S.DIO | RB081L-20 | T | 125.2/32.8 |
| D41 | 1750000960 | S.DIO | RB081L-20 | T | 85.7/88.1 |
| D61 | 1750000960 | S.DIO | RB081L-20 | T | 88.6/54.3 |
| D81 | 1750000960 | S.DIO | RB081L-20 | T | 31.2/22 |
| D101 | 1750000960 | S.DIO | RB081L-20 | T | 87.6/21.9 |
| D121 | 1710000840 | S.DIO | 1SR154-400 TE25 | T | 145.3/70.6 |
| D122 | 1750001011 | S.DIO | MBRD835LT4G | T | 120.6/82.8 |
| D123 | 1750000960 | S.DIO | RB081L-20 | T | 132.6/86.1 |
| D141 | 1750000520 | S.DIO | DAN222TL | T | 11.3/94.8 |
| L21 | 6200003950 | S.COL | HF50ACC 322513-T | T | 117.9/55.1 |
| L22 | 6200010891 | S.COL | CDRH124NP-150MC | T | 115.5/34.2 |
| L23 | 6200010881 | S.COL | CDRH124NP-330MC | T | 130/50.7 |
| L41 | 6200009790 | S.COL | BLM31PG121SN1 | T | 63.2/81.3 |
| L42 | 6200010891 | S.COL | CDRH124NP-150MC | T | 84.7/80.3 |
| L43 | 6200010881 | S.COL | CDRH124NP-330MC | T | 68.3/94 |
| L44 | 6200009790 | S.COL | BLM31PG121SN1 | T | 63.2/83.6 |
| L61 | 6200003950 | S.COL | HF50ACC 322513-T | T | 62.9/46.6 |
| L62 | 6200010901 | S.COL | CDRH104RNP-100NC | T | 80.4/45 |
| L63 | 6200010881 | S.COL | CDRH124NP-330MC | T | 66.5/58 |
| L81 | 6200003950 | S.COL | HF50ACC 322513-T | T | 27.4/47.8 |
| L82 | 6200010901 | S.COL | CDRH104RNP-100NC | T | 22.7/32 |
| L83 | 6200010881 | S.COL | CDRH124NP-330MC | T | 36.1/43.1 |
| L101 | 6200003950 | S.COL | HF50ACC 322513-T | T | 62.9/16.6 |
| L102 | 6200010881 | S.COL | CDRH124NP-330MC | T | 84.9/12.1 |
| L103 | 6190001191 | S.COL | D10F-#A814AY-101K | T | 65.5/26.6 |
| L121 | 6190001640 | S.COL | SLF12555T-101M1R1 | T | 119.3/72.3 |
| L122 | 6190001191 | S.COL | D10F-#A814AY-101K | T | 141.6/80.9 |
| L141 | 6200001831 | S.COL | NLV32T-100J | T | 10.5/99.4 |
| L142 | 6200010901 | S.COL | CDRH104RNP-100NC | T | 97.3/109 |
| R21 | 7030006091 | S.RES | ERA3YED 822V (8.2 k) | T | 119.1/19.7 |
| R41 | 7030006091 | S.RES | ERA3YED 822V (8.2 k) | T | 98.9/83.8 |
| R61 | 7030006091 | S.RES | ERA3YED 822V (8.2 k) | T | 98.8/48.5 |
| R81 | 7030006091 | S.RES | ERA3YED 822V (8.2 k) | T | 27/12.2 |
| R101 | 7030009851 | S.RES | ERA3YED 271V (270) | T | 102/17.9 |
| R102 | 7030007230 | S.RES | ERA3YED 102V (1 k) | T | 102/20.8 |
| R103 | 7030006091 | S.RES | ERA3YED 822V (8.2 k) | T | 97.9/15.7 |
| R121 | 7030003640 | S.RES | ERJ3GEYJ 473 V (47 k) | T | 133.3/72.6 |
| R122 | 7030003640 | S.RES | ERJ3GEYJ 473 V (47 k) | T | 132/71.8 |
| R141 | 7030008190 | S.RES | ERJ12YJ330U (33) | T | 14.7/99 |
| C9 | 4510008910 | S.ELE | EEEFC1C101P | T | 138.5/69.7 |
| C21 | 4030011600 | S.CER | C1608 JB 1E 104K-T | T | 125.3/40.8 |
| C22 | 4510008610 | S.ELE | 10SVP150MX | T | 131.1/38.1 |
| C23 | 4030011340 | S.CER | C1608 CH 1H 471J-T | T | 119.1/17.1 |
| C24 | 4030004750 | S.CER | C2012 JB 1H 103K-T | T | 119.7/23.7 |
| C25 | 4030005110 | S.CER | C2012 JB 1E 473K-T | T | 125.3/27.5 |
| C26 | 4550006770 | S.TAN | TEESVD2 1C 476M-12R | T | 132.1/30 |
| C27 | 4510008610 | S.ELE | 10SVP150MX | T | 115.3/47.4 |
| C41 | 4030011600 | S.CER | C1608 JB 1E 104K-T | T | 77.5/89.5 |
| C42 | 4510008610 | S.ELE | 10SVP150MX | T | 80.8/95.2 |
| C43 | 4030011340 | S.CER | C1608 CH 1H 471J-T | T | 101.4/83.8 |
| C44 | 4030004750 | S.CER | C2012 JB 1H 103K-T | T | 94.8/84.1 |
| C45 | 4030005110 | S.CER | C2012 JB 1E 473K-T | T | 91.4/90.6 |
| C46 | 4550007140 | S.TAN | TEESVD 1C 107M12R | T | 87.6/96.4 |
| C47 | 4510008610 | S.ELE | 10SVP150MX | T | 70.5/79.1 |
| C61 | 4030011600 | S.CER | C1608 JB 1E 104K-T | T | 81.5/56 |
| C62 | 4510008610 | S.ELE | 10SVP150MX | T | 77.3/60.9 |
| C63 | 4030011340 | S.CER | C1608 CH 1H 471J-T | T | 101.4/48.5 |
| C64 | 4030004750 | S.CER | C2012 JB 1H 103K-T | T | 94.8/49.1 |
| C65 | 4030011600 | S.CER | C1608 JB 1E 104K-T | T | 91.1/55.4 |
| C66 | 4550006770 | S.TAN | TEESVD2 1C 476M-12R | T | 85.6/61.7 |
| C67 | 4510008610 | S.ELE | 10SVP150MX | T | 69.6/44 |
| C81 | 4030011600 | S.CER | C1608 JB 1E 104K-T | T | 33.1/28.4 |
| C82 | 4510008610 | S.ELE | 10SVP150MX | T | 37.9/32.4 |
| C83 | 4030011340 | S.CER | C1608 CH 1H 471J-T | T | 26.9/9.7 |
| C84 | 4030004750 | S.CER | C2012 JB 1H 103K-T | T | 27.7/16.1 |
| C85 | 4030011600 | S.CER | C1608 JB 1E 104K-T | T | 33.4/19.8 |
| C86 | 4550006770 | S.TAN | TEESVD2 1C 476M-12R | T | 38/25.1 |
| C87 | 4510008610 | S.ELE | 10SVP150MX | T | 21.7/42.7 |
| C101 | 4030011600 | S.CER | C1608 JB 1E 104K-T | T | 80.1/22.7 |
| C102 | 4510008610 | S.ELE | 10SVP150MX | T | 75.7/27.3 |
| C103 | 4030011340 | S.CER | C1608 CH 1H 471J-T | T | 100.4/15.6 |
| C104 | 4030004750 | S.CER | C2012 JB 1H 103K-T | T | 93.8/16.2 |
| C105 | 4030005110 | S.CER | C2012 JB 1E 473K-T | T | 90.1/22.5 |
| C106 | 4550006770 | S.TAN | TEESVD2 1C 476M-12R | T | 83.8/28.2 |
| C107 | 4510008610 | S.ELE | 10SVP150MX | T | 68.6/11.3 |
| C122 | 4030011600 | S.CER | C1608 JB 1E 104K-T | T | 132/69.2 |
| C123 | 4510008940 | S.ELE | EEEFC1V470P | T | 131.7/79.3 |
| C124 | 4030006880 | S.CER | C1608 JB 1H 472K-T | T | 120.8/95.1 |
| C141 | 4030011600 | S.CER | C1608 JB 1E 104K-T | T | 7.6/97.9 |
| RL142 | 6330001760 | RLY | AW3023 | | |
| J2 | 6510003471 | CNR | B11B-EH-S (LF) (SN) | | |
| J3 | 6510003431 | CNR | B07B-EH-S (LF) (SN) | | |
| J4 | 6510003461 | CNR | B10B-EH-S (LF) (SN) | | |
| J5 | 6510020421 | S.CNR | S4B-PH-SM4-TB (LF) (SN) | T | 128.2/97.5 |
| W1 | 8900012780 | CBL | OPC-1298 | | |

## [TUNER UNIT]

| REF NO. | ORDER NO. | DESCRIPTION | | M. | H/V LOCATION |
|---|---|---|---|---|---|
| MF1 | 2710000780 | MTR | MP24Z (STEPPING MOTOR) | | |
| MF2 | 2710000780 | MTR | MP24Z (STEPPING MOTOR) | | |
| MF3 | 2710000470 | FAN | MF60B-12H901 | | |
| W1 | 8900012901 | CBL | OPC-1345R | | |
| W2 | 8900012901 | CBL | OPC-1345R | | |
| W3 | 8900017140 | CBL | OPC-927A (P1,N24,L100) | | |
| W51 | 8600037090 | CBL | SX2590 P51 | | |

M.=Mounted side (T: Mounted on the Top side, B: Mounted on the Bottom side)
S.=Surface mount

## [CTRL BOARD]

| REF NO. | ORDER NO. | DESCRIPTION | | M. | H/V LOCATION |
|---|---|---|---|---|---|
| IC1 | 1140004120 | S.IC | M38022M2-138FP | T | 65.7/81.8 |
| IC2 | 1130010390 | S.IC | HN58X2416TI | T | 54/86.9 |
| IC3 | 1130003921 | S.IC | TC4S69F (TE85R,F) | T | 55.9/58.2 |
| IC4 | 1180001071 | S.IC | TA7805F (TE16L,Q) | B | 63/57.7 |
| IC5 | 1130009691 | S.IC | TC74HCT7007AF (F) | B | 92.5/91.6 |
| IC6 | 1130006441 | S.IC | TC7S08F (TE85R,F) | T | 81.7/70.3 |
| IC51 | 1130011530 | S.IC | CD74HC4094M96 | T | 42.2/72.4 |
| IC52 | 1130007690 | S.IC | BU4066BCF-E2 | B | 12.5/76.8 |
| IC55 | 1130011530 | S.IC | CD74HC4094M96 | B | 100.2/76.1 |
| IC56 | 1130011530 | S.IC | CD74HC4094M96 | B | 114.3/76.1 |
| IC57 | 1160000131 | S.IC | TD62783AFG (S,EL) | T | 99.6/73.1 |
| IC58 | 1160000131 | S.IC | TD62783AFG (S,EL) | T | 113.7/73.1 |
| IC101 | 1110000960 | S.IC | NJM4558M-TE1-#FMZB | T | 19.4/37.8 |
| IC151 | 1120002301 | S.IC | TC74AC04F (F) | B | 35.3/44.3 |
| IC153 | 1130012011 | S.IC | TC7SZ32F (TE85L,F) | T | 31.2/47.3 |
| IC154 | 1130012011 | S.IC | TC7SZ32F (TE85L,F) | T | 42.4/45.8 |
| IC155 | 1130012011 | S.IC | TC7SZ32F (TE85L,F) | T | 36/47.5 |
| IC156 | 1130012021 | S.IC | TC74ACT112F (EL,F) | T | 38.4/56.5 |
| IC201 | 1110000960 | S.IC | NJM4558M-TE1-#FMZB | T | 19/54.7 |
| IC301 | 1110002690 | S.IC | NJM2903M-TE1-#FMZB | T | 73.4/59 |
| IC401 | 1160000131 | S.IC | TD62783AFG (S,EL) | T | 13.6/86.1 |
| IC402 | 1160000131 | S.IC | TD62783AFG (S,EL) | T | 31.6/84.7 |
| Q1 | 1590001330 | S.TR | DTA114EUA T106 | T | 78.5/75.2 |
| Q2 | 1590000680 | S.TR | DTC114EUA T106 | T | 77.8/71.2 |
| Q3 | 1590000680 | S.TR | DTC114EUA T106 | T | 128.4/74.5 |
| Q4 | 1590000680 | S.TR | DTC114EUA T106 | T | 128.4/77 |
| Q5 | 1590000680 | S.TR | DTC114EUA T106 | T | 128.4/81.3 |
| Q6 | 1590000680 | S.TR | DTC114EUA T106 | T | 128.4/83.8 |
| Q7 | 1590000680 | S.TR | DTC114EUA T106 | T | 128.4/88.5 |
| Q8 | 1590000680 | S.TR | DTC114EUA T106 | T | 128.4/91 |
| Q9 | 1590000680 | S.TR | DTC114EUA T106 | T | 128.4/95.7 |
| Q10 | 1590000680 | S.TR | DTC114EUA T106 | T | 128.4/100.5 |
| Q11 | 1590000680 | S.TR | DTC114EUA T106 | B | 85.7/99.8 |
| Q51 | 1590000680 | S.TR | DTC114EUA T106 | T | 6.1/78.6 |
| Q52 | 1590000680 | S.TR | DTC114EUA T106 | T | 12.5/78.6 |
| Q53 | 1590000680 | S.TR | DTC114EUA T106 | B | 6.6/72.8 |
| Q54 | 1560001260 | S.FET | 2SK3018 T106 | B | 121.2/80.2 |
| Q55 | 1590000680 | S.TR | DTC114EUA T106 | B | 130.2/68.9 |
| Q59 | 1590000680 | S.TR | DTC114EUA T106 | T | 56.8/69.5 |
| Q201 | 1560000871 | S.FET | 2SK515-T1B-A (X33) | T | 52.6/43 |
| Q251 | 1590000680 | S.TR | DTC114EUA T106 | T | 74.2/34.9 |
| D1 | 1730000411 | S.ZEN | RD5.1M-T2B-A B2 | T | 63.4/58.4 |
| D2 | 1710000780 | S.DIO | MA114 (TX) | T | 67.7/55.9 |
| D3 | 1750000201 | S.DIO | 1SS319 (TE85R,F) | B | 129.5/98.1 |
| D4 | 1750000201 | S.DIO | 1SS319 (TE85R,F) | B | 129.5/90 |
| D5 | 1750000201 | S.DIO | 1SS319 (TE85R,F) | B | 129.5/82.8 |
| D6 | 1750000201 | S.DIO | 1SS319 (TE85R,F) | B | 129.5/76 |
| D7 | 1730000031 | S.ZEN | RD5.6M-T2B-A B2 | T | 63.6/54.9 |
| D101 | 1790000491 | S.DIO | HSM88ASTR-E | T | 14.7/24.3 |
| D102 | 1790000491 | S.DIO | HSM88ASTR-E | T | 25.6/29.5 |
| D103 | 1750000201 | S.DIO | 1SS319 (TE85R,F) | T | 19.3/42.1 |
| D151 | 1790000491 | S.DIO | HSM88ASTR-E | T | 32/38.2 |
| D152 | 1790000491 | S.DIO | HSM88ASTR-E | T | 39.4/38.2 |
| D153 | 1790000491 | S.DIO | HSM88ASTR-E | T | 28.4/57.2 |
| D154 | 1790000491 | S.DIO | HSM88ASTR-E | T | 29.6/53.4 |
| D201 | 1790000491 | S.DIO | HSM88ASTR-E | T | 57.6/37.2 |
| D202 | 1790000491 | S.DIO | HSM88ASTR-E | T | 48.5/37.1 |
| D203 | 1750000201 | S.DIO | 1SS319 (TE85R,F) | T | 18/60.9 |
| D251 | 1750000271 | S.DIO | 1SS301 (TE85L,F) | T | 72.1/36.5 |
| D301 | 1790000491 | S.DIO | HSM88ASTR-E | T | 81.5/58.3 |
| D302 | 1790000491 | S.DIO | HSM88ASTR-E | T | 88.4/59.6 |
| X1 | 6050009890 | S.XTL | CR-569 (6.144 MHz) | T | 83.2/79.5 |
| L1 | 6200003261 | S.COL | NLV32T-101J | T | 51.1/76.5 |
| L2 | 6200003261 | S.COL | NLV32T-101J | T | 54.5/77.8 |
| L4 | 2040000490 | COL | EXC-ELDR25C | | |
| L5 | 6200005131 | S.COL | NLC453232T-101K-PF | T | 121.6/100.3 |
| L6 | 6200003590 | S.COL | EXCCL3225U1 | T | 109.3/91.1 |
| L7 | 6200003590 | S.COL | EXCCL3225U1 | T | 106.3/91.2 |
| L8 | 6200003590 | S.COL | EXCCL3225U1 | T | 103.3/91.1 |
| L9 | 6200003950 | S.COL | HF50ACC 322513-T | B | 92/101 |
| L51 | 6200003261 | S.COL | NLV32T-101J | T | 106.3/86.9 |
| L52 | 6200005131 | S.COL | NLC453232T-101K-PF | T | 114.9/88.1 |
| L101 | 6140004410 | COL | LR-502 | | |
| L102 | 6200001831 | S.COL | NLV32T-100J | T | 20.9/66.5 |
| L103 | 6200003261 | S.COL | NLV32T-101J | T | 15.2/66.4 |
| L151 | 6140004410 | COL | LR-502 | | |
| L152 | 6200001831 | S.COL | NLV32T-100J | T | 41.4/63 |
| L201 | 6140004410 | COL | LR-502 | | |
| L202 | 6180003300 | COL | T6-222J (2.2M) | | |
| L301 | 6140004410 | COL | LR-502 | | |
| L302 | 6200003261 | S.COL | NLV32T-101J | B | 69.4/61.2 |
| L401 | 6200003950 | S.COL | HF50ACC 322513-T | T | 26.4/101.5 |
| L402 | 6200003950 | S.COL | HF50ACC 322513-T | T | 18.5/101.5 |
| R2 | 7030003680 | S.RES | ERJ3GEYJ 104 V (100 k) | T | 63/71 |
| R3 | 7030003680 | S.RES | ERJ3GEYJ 104 V (100 k) | T | 64.3/71 |
| R4 | 7030003680 | S.RES | ERJ3GEYJ 104 V (100 k) | T | 65.6/71 |
| R5 | 7030003680 | S.RES | ERJ3GEYJ 104 V (100 k) | T | 66.9/71 |
| R6 | 7030003560 | S.RES | ERJ3GEYJ 103 V (10 k) | T | 74.7/71 |
| R7 | 7030003440 | S.RES | ERJ3GEYJ 102 V (1 k) | T | 73.4/71 |
| R8 | 7030003680 | S.RES | ERJ3GEYJ 104 V (100 k) | T | 55.4/72.8 |
| R9 | 7030003680 | S.RES | ERJ3GEYJ 104 V (100 k) | T | 54.7/74.7 |
| R10 | 7030003680 | S.RES | ERJ3GEYJ 104 V (100 k) | T | 57.3/72.9 |
| R11 | 7030003680 | S.RES | ERJ3GEYJ 104 V (100 k) | T | 53.4/74.7 |
| R12 | 7030003440 | S.RES | ERJ3GEYJ 102 V (1 k) | T | 78.3/83.9 |
| R13 | 7030003680 | S.RES | ERJ3GEYJ 104 V (100 k) | T | 76.6/75.6 |
| R14 | 7030003680 | S.RES | ERJ3GEYJ 104 V (100 k) | T | 78.5/78.2 |
| R15 | 7030003440 | S.RES | ERJ3GEYJ 102 V (1 k) | T | 55.6/60.7 |
| R16 | 7030003320 | S.RES | ERJ3GEYJ 101 V (100) | T | 54.8/55.2 |

## [CTRL BOARD]

| REF NO. | ORDER NO. | DESCRIPTION | | M. | H/V LOCATION |
|---|---|---|---|---|---|
| R17 | 7030003560 | S.RES | ERJ3GEYJ 103 V (10 k) | T | 54.1/82.2 |
| R18 | 7030003560 | S.RES | ERJ3GEYJ 103 V (10 k) | T | 54.1/80.9 |
| R19 | 7030003680 | S.RES | ERJ3GEYJ 104 V (100 k) | T | 58.3/58.2 |
| R20 | 7030003570 | S.RES | ERJ3GEYJ 123 V (12 k) | T | 59.6/60.6 |
| R21 | 7030003650 | S.RES | ERJ3GEYJ 563 V (56 k) | T | 59.6/58.2 |
| R22 | 7030003450 | S.RES | ERJ3GEYJ 122 V (1.2 k) | T | 66.3/58.5 |
| R23 | 7030003560 | S.RES | ERJ3GEYJ 103 V (10 k) | B | 105.1/100 |
| R24 | 7030003440 | S.RES | ERJ3GEYJ 102 V (1 k) | B | 102.9/98.8 |
| R25 | 7030003380 | S.RES | ERJ3GEYJ 331 V (330) | B | 126/99.1 |
| R26 | 7030003380 | S.RES | ERJ3GEYJ 331 V (330) | B | 126/97.1 |
| R27 | 7030003380 | S.RES | ERJ3GEYJ 331 V (330) | B | 126/91 |
| R28 | 7030003380 | S.RES | ERJ3GEYJ 331 V (330) | B | 126/89 |
| R29 | 7030003380 | S.RES | ERJ3GEYJ 331 V (330) | B | 126/83.8 |
| R30 | 7030003380 | S.RES | ERJ3GEYJ 331 V (330) | B | 126/81.8 |
| R31 | 7030003380 | S.RES | ERJ3GEYJ 331 V (330) | B | 126/77 |
| R32 | 7030003380 | S.RES | ERJ3GEYJ 331 V (330) | B | 126/75 |
| R40 | 7030003440 | S.RES | ERJ3GEYJ 102 V (1 k) | T | 61.2/99.9 |
| R42 | 7030003860 | S.RES | ERJ3GE JPW V | T | 60.4/71 |
| R43 | 7030003860 | S.RES | ERJ3GE JPW V | T | 60.7/69 |
| R44 | 7030003860 | S.RES | ERJ3GE JPW V | T | 68.2/71 |
| R45 | 7030003860 | S.RES | ERJ3GE JPW V | T | 65.7/68.5 |
| R46 | 7030003860 | S.RES | ERJ3GE JPW V | T | 70.6/68.9 |
| R51 | 7030003440 | S.RES | ERJ3GEYJ 102 V (1 k) | B | 35.8/80.1 |
| R52 | 7030003440 | S.RES | ERJ3GEYJ 102 V (1 k) | B | 34.3/80.1 |
| R53 | 7030003440 | S.RES | ERJ3GEYJ 102 V (1 k) | B | 32.8/80.1 |
| R54 | 7030003440 | S.RES | ERJ3GEYJ 102 V (1 k) | B | 31.2/80.1 |
| R55 | 7030003440 | S.RES | ERJ3GEYJ 102 V (1 k) | B | 29.6/80.1 |
| R56 | 7030003440 | S.RES | ERJ3GEYJ 102 V (1 k) | B | 28/80.1 |
| R57 | 7030003440 | S.RES | ERJ3GEYJ 102 V (1 k) | B | 26.4/80.1 |
| R58 | 7030003440 | S.RES | ERJ3GEYJ 102 V (1 k) | B | 24.8/80.1 |
| R59 | 7030003440 | S.RES | ERJ3GEYJ 102 V (1 k) | T | 18.3/78.7 |
| R60 | 7030003440 | S.RES | ERJ3GEYJ 102 V (1 k) | T | 17/76 |
| R61 | 7030003440 | S.RES | ERJ3GEYJ 102 V (1 k) | T | 15.7/76 |
| R62 | 7030003440 | S.RES | ERJ3GEYJ 102 V (1 k) | T | 14.4/78.7 |
| R63 | 7030003440 | S.RES | ERJ3GEYJ 102 V (1 k) | T | 10.6/78.7 |
| R64 | 7030003440 | S.RES | ERJ3GEYJ 102 V (1 k) | T | 9.3/74.8 |
| R65 | 7030003440 | S.RES | ERJ3GEYJ 102 V (1 k) | T | 8/74.8 |
| R66 | 7030003520 | S.RES | ERJ3GEYJ 472 V (4.7 k) | B | 15.6/81.6 |
| R67 | 7030003200 | S.RES | ERJ3GEYJ 100 V (10) | T | 99.8/90.4 |
| R68 | 7030003200 | S.RES | ERJ3GEYJ 100 V (10) | T | 98.5/90.4 |
| R69 | 7030003200 | S.RES | ERJ3GEYJ 100 V (10) | T | 97.2/90.4 |
| R70 | 7030004040 | S.RES | ERJ3GEYJ 4R7 V (4.7) | T | 104.8/65.9 |
| R71 | 7030004040 | S.RES | ERJ3GEYJ 4R7 V (4.7) | T | 103.5/65.9 |
| R72 | 7030004040 | S.RES | ERJ3GEYJ 4R7 V (4.7) | T | 102.2/65.9 |
| R73 | 7030004040 | S.RES | ERJ3GEYJ 4R7 V (4.7) | T | 100.9/65.9 |
| R74 | 7030004040 | S.RES | ERJ3GEYJ 4R7 V (4.7) | T | 99.6/65.9 |
| R75 | 7030004040 | S.RES | ERJ3GEYJ 4R7 V (4.7) | T | 98.3/65.9 |
| R76 | 7030004040 | S.RES | ERJ3GEYJ 4R7 V (4.7) | T | 97/65.9 |
| R77 | 7030004040 | S.RES | ERJ3GEYJ 4R7 V (4.7) | T | 95.7/65.9 |
| R78 | 7030004040 | S.RES | ERJ3GEYJ 4R7 V (4.7) | B | 120.1/64.6 |
| R84 | 7030004040 | S.RES | ERJ3GEYJ 4R7 V (4.7) | B | 110.5/64.6 |
| R85 | 7030004040 | S.RES | ERJ3GEYJ 4R7 V (4.7) | B | 108.9/64.6 |
| R86 | 7030003560 | S.RES | ERJ3GEYJ 103 V (10 k) | B | 116.1/83.6 |
| R87 | 7030003860 | S.RES | ERJ3GE JPW V | T | 32.5/76 |
| R88 | 7030003860 | S.RES | ERJ3GE JPW V | T | 31.2/76 |
| R89 | 7030003860 | S.RES | ERJ3GE JPW V | T | 29.9/76 |
| R90 | 7030003860 | S.RES | ERJ3GE JPW V | T | 28.6/76 |
| R91 | 7030003860 | S.RES | ERJ3GE JPW V | T | 27.3/76 |
| R92 | 7030003860 | S.RES | ERJ3GE JPW V | T | 26/76 |
| R95 | 7030003860 | S.RES | ERJ3GE JPW V | T | 15.7/78.7 |
| R97 | 7030003860 | S.RES | ERJ3GE JPW V | T | 8/78.7 |
| R101 | 7030010950 | S.RES | ERJ1TYJ 100U (10) | T | 18.6/29.5 |
| R102 | 7030010950 | S.RES | ERJ1TYJ 100U (10) | T | 22.3/29.5 |
| R103 | 7030003560 | S.RES | ERJ3GEYJ 103 V (10 k) | T | 12.2/34.7 |
| R104 | 7030003560 | S.RES | ERJ3GEYJ 103 V (10 k) | T | 27.6/34.9 |
| R105 | 7030003720 | S.RES | ERJ3GEYJ 224 V (220 k) | T | 12.2/37.3 |
| R106 | 7030003720 | S.RES | ERJ3GEYJ 224 V (220 k) | T | 25/36.7 |
| R107 | 7030003660 | S.RES | ERJ3GEYJ 683 V (68 k) | T | 14.1/36.5 |
| R108 | 7030003660 | S.RES | ERJ3GEYJ 683 V (68 k) | T | 23.2/34.8 |
| R109 | 7030003720 | S.RES | ERJ3GEYJ 224 V (220 k) | T | 13.3/38.7 |
| R110 | 7030003720 | S.RES | ERJ3GEYJ 224 V (220 k) | T | 25/37.9 |
| R111 | 7030009340 | S.RES | ERJ3GEYJ 275V (2.7 M) | T | 13.7/40.6 |
| R112 | 7030003810 | S.RES | ERJ3GEYJ 125 V (1.2 M) | T | 25/39.1 |
| R115 | 7030009340 | S.RES | ERJ3GEYJ 275V (2.7 M) | T | 12.4/40.6 |
| R151 | 7030007190 | S.RES | ERJ12YJ220U (22) | T | 37.6/27.2 |
| R152 | 7030010620 | S.RES | ERJ12YJ180U (18) | B | 38.1/26.8 |
| R153 | 7030007190 | S.RES | ERJ12YJ220U (22) | T | 37.6/31.8 |
| R154 | 7030010620 | S.RES | ERJ12YJ180U (18) | B | 38.1/31.8 |
| R155 | 7030003320 | S.RES | ERJ3GEYJ 101 V (100) | T | 37/39.6 |
| R157 | 7030003320 | S.RES | ERJ3GEYJ 101 V (100) | T | 30.3/40.1 |
| R158 | 7030003560 | S.RES | ERJ3GEYJ 103 V (10 k) | T | 31.8/41.5 |
| R159 | 7030003560 | S.RES | ERJ3GEYJ 103 V (10 k) | T | 38.4/41.5 |
| R160 | 7030003280 | S.RES | ERJ3GEYJ 470 V (47) | T | 30/42.3 |
| R161 | 7030003280 | S.RES | ERJ3GEYJ 470 V (47) | T | 39.7/43 |
| R162 | 7030003440 | S.RES | ERJ3GEYJ 102 V (1 k) | T | 30.9/44.9 |
| R163 | 7030003440 | S.RES | ERJ3GEYJ 102 V (1 k) | T | 42/43.3 |
| R164 | 7030003280 | S.RES | ERJ3GEYJ 470 V (47) | T | 33.6/47.7 |
| R165 | 7030003280 | S.RES | ERJ3GEYJ 470 V (47) | T | 39.2/46.4 |
| R166 | 7030003440 | S.RES | ERJ3GEYJ 102 V (1 k) | T | 34.3/44.7 |
| R167 | 7030003440 | S.RES | ERJ3GEYJ 102 V (1 k) | T | 39.2/45.1 |
| R168 | 7030003280 | S.RES | ERJ3GEYJ 470 V (47) | T | 38.8/49.8 |
| R169 | 7030003440 | S.RES | ERJ3GEYJ 102 V (1 k) | T | 38.8/51.1 |
| R170 | 7030003280 | S.RES | ERJ3GEYJ 470 V (47) | T | 31.5/58.2 |
| R171 | 7030003280 | S.RES | ERJ3GEYJ 470 V (47) | T | 31.5/56.9 |
| R172 | 7030003480 | S.RES | ERJ3GEYJ 222 V (2.2 k) | T | 32/53.7 |
| R173 | 7030003500 | S.RES | ERJ3GEYJ 332 V (3.3 k) | T | 27.2/54.9 |
| R174 | 7030003360 | S.RES | ERJ3GEYJ 221 V (220) | T | 27.2/52.3 |
| R201 | 7030010420 | S.RES | ERJ1TYJ 560U (56) | T | 49/29.7 |
| R202 | 7030010420 | S.RES | ERJ1TYJ 560U (56) | B | 49.3/29.4 |
| R203 | 7030010420 | S.RES | ERJ1TYJ 560U (56) | T | 49/33.7 |
| R204 | 7030010420 | S.RES | ERJ1TYJ 560U (56) | B | 49.3/34 |
| R205 | 7030003560 | S.RES | ERJ3GEYJ 103 V (10 k) | T | 52.3/45.4 |
| R206 | 7030003560 | S.RES | ERJ3GEYJ 103 V (10 k) | T | 57.4/41.5 |
| R207 | 7030003800 | S.RES | ERJ3GEYJ 105 V (1 M) | T | 50.1/41.9 |

M.=Mounted side (T: Mounted on the Top side, B: Mounted on the Bottom side)
S.=Surface mount

## [CTRL BOARD]

| REF NO. | ORDER NO. | DESCRIPTION | | M. | H/V LOCATION |
|---|---|---|---|---|---|
| R208 | 7030003560 | S.RES | ERJ3GEYJ 103 V (10 k) | T | 54.8/42.6 |
| R209 | 7030003520 | S.RES | ERJ3GEYJ 472 V (4.7 k) | T | 54.8/40 |
| R210 | 7030003440 | S.RES | ERJ3GEYJ 102 V (1 k) | T | 56.1/42.7 |
| R211 | 7030003480 | S.RES | ERJ3GEYJ 222 V (2.2 k) | T | 13.1/49.4 |
| R212 | 7030003560 | S.RES | ERJ3GEYJ 103 V (10 k) | T | 25.1/49.4 |
| R213 | 7030005331 | S.RES | ERA3YED 562V (5.6 k) | T | 17.8/49.9 |
| R214 | 7030005331 | S.RES | ERA3YED 562V (5.6 k) | T | 16.5/49.9 |
| R215 | 7030005871 | S.RES | ERA3YKD 104V (100 k) | T | 14/53 |
| R216 | 7030008121 | S.RES | ERA3YED 682V (6.8 k) | T | 20.6/50 |
| R217 | 7030008121 | S.RES | ERA3YED 682V (6.8 k) | T | 22.3/48.1 |
| R218 | 7030005871 | S.RES | ERA3YKD 104V (100 k) | T | 23.8/52 |
| R221 | 7030003670 | S.RES | ERJ3GEYJ 823 V (82 k) | B | 17.1/57 |
| R222 | 7030003680 | S.RES | ERJ3GEYJ 104 V (100 k) | T | 20.9/51.3 |
| R223 | 7030003820 | S.RES | ERJ3GEYJ 155 V (1.5 M) | T | 14/55.8 |
| R224 | 7030003820 | S.RES | ERJ3GEYJ 155 V (1.5 M) | T | 23.8/54.6 |
| R225 | 7030003560 | S.RES | ERJ3GEYJ 103 V (10 k) | T | 14/61.4 |
| R226 | 7030003560 | S.RES | ERJ3GEYJ 103 V (10 k) | T | 21.9/61.4 |
| R227 | 7030003560 | S.RES | ERJ3GEYJ 103 V (10 k) | T | 14.7/63.4 |
| R228 | 7030003560 | S.RES | ERJ3GEYJ 103 V (10 k) | T | 21.3/63.4 |
| R252 | 7030000230 | S.RES | MCR10EZHJ 56 (560) | T | 70.8/31.9 |
| R253 | 7030000230 | S.RES | MCR10EZHJ 56 (560) | T | 69.9/35.2 |
| R254 | 7030000230 | S.RES | MCR10EZHJ 56 (560) | T | 70.8/38.7 |
| R255 | 7030000220 | S.RES | MCR10EZHJ 47 (470) | T | 72.2/40.8 |
| R256 | 7030000230 | S.RES | MCR10EZHJ 56 (560) | T | 72.4/31 |
| R301 | 7030003560 | S.RES | ERJ3GEYJ 103 V (10 k) | T | 83.7/57.6 |
| R302 | 7030003670 | S.RES | ERJ3GEYJ 823 V (82 k) | T | 81.9/61.2 |
| R303 | 7030010910 | S.RES | ERJ1TYJ 150U (15) | B | 90.1/60.7 |
| R304 | 7030003560 | S.RES | ERJ3GEYJ 103 V (10 k) | T | 85.5/62 |
| R305 | 7030003720 | S.RES | ERJ3GEYJ 224 V (220 k) | T | 80.6/61.2 |
| R306 | 7030003660 | S.RES | ERJ3GEYJ 683 V (68 k) | T | 78.7/57.2 |
| R307 | 7030003660 | S.RES | ERJ3GEYJ 683 V (68 k) | T | 79.2/59.7 |
| R308 | 7030003840 | S.RES | ERJ3GEYJ 225 V (2.2 M) | B | 76.5/58.3 |
| R309 | 7030003720 | S.RES | ERJ3GEYJ 224 V (220 k) | T | 76.1/53.9 |
| R310 | 7030003840 | S.RES | ERJ3GEYJ 225 V (2.2 M) | T | 73.4/54 |
| R311 | 7030003440 | S.RES | ERJ3GEYJ 102 V (1 k) | T | 76/55.5 |
| R312 | 7030003560 | S.RES | ERJ3GEYJ 103 V (10 k) | T | 73.4/55.5 |
| R313 | 7030003700 | S.RES | ERJ3GEYJ 154 V (150 k) | T | 78.5/61.6 |
| R345 | 7030003560 | S.RES | ERJ3GEYJ 103 V (10 k) | T | 88.3/83.7 |
| R401 | 7030004040 | S.RES | ERJ3GEYJ 4R7 V (4.7) | T | 17.5/93.4 |
| R402 | 7030004040 | S.RES | ERJ3GEYJ 4R7 V (4.7) | T | 16.2/93.4 |
| R403 | 7030004040 | S.RES | ERJ3GEYJ 4R7 V (4.7) | T | 14.9/93.4 |
| R404 | 7030004040 | S.RES | ERJ3GEYJ 4R7 V (4.7) | T | 13.6/93.4 |
| R405 | 7030004040 | S.RES | ERJ3GEYJ 4R7 V (4.7) | T | 12.3/93.4 |
| R406 | 7030004040 | S.RES | ERJ3GEYJ 4R7 V (4.7) | T | 11/93.4 |
| R407 | 7030004040 | S.RES | ERJ3GEYJ 4R7 V (4.7) | T | 9.7/93.4 |
| R408 | 7030004040 | S.RES | ERJ3GEYJ 4R7 V (4.7) | T | 8.4/93.4 |
| R409 | 7030004040 | S.RES | ERJ3GEYJ 4R7 V (4.7) | B | 36.6/86.7 |
| R410 | 7030004040 | S.RES | ERJ3GEYJ 4R7 V (4.7) | B | 35.1/86.7 |
| R411 | 7030004040 | S.RES | ERJ3GEYJ 4R7 V (4.7) | B | 33.6/86.7 |
| R412 | 7030004040 | S.RES | ERJ3GEYJ 4R7 V (4.7) | B | 32/86.7 |
| R413 | 7030004040 | S.RES | ERJ3GEYJ 4R7 V (4.7) | B | 30.4/86.7 |
| R414 | 7030004040 | S.RES | ERJ3GEYJ 4R7 V (4.7) | B | 28.8/86.7 |
| R415 | 7030004040 | S.RES | ERJ3GEYJ 4R7 V (4.7) | B | 27.2/86.7 |
| R416 | 7030004040 | S.RES | ERJ3GEYJ 4R7 V (4.7) | B | 25.6/86.7 |
| R417 | 7030003440 | S.RES | ERJ3GEYJ 102 V (1 k) | B | 31.3/98.5 |
| R418 | 7030003440 | S.RES | ERJ3GEYJ 102 V (1 k) | B | 44.8/98.5 |
| R419 | 7030003440 | S.RES | ERJ3GEYJ 102 V (1 k) | B | 32.9/98.5 |
| R420 | 7030003440 | S.RES | ERJ3GEYJ 102 V (1 k) | B | 46.4/98.5 |
| R421 | 7030003440 | S.RES | ERJ3GEYJ 102 V (1 k) | B | 34.5/98.5 |
| R422 | 7030003440 | S.RES | ERJ3GEYJ 102 V (1 k) | B | 48/98.5 |
| R423 | 7030003440 | S.RES | ERJ3GEYJ 102 V (1 k) | B | 36.1/98.5 |
| R424 | 7030003440 | S.RES | ERJ3GEYJ 102 V (1 k) | B | 49.6/98.5 |
| R425 | 7030003440 | S.RES | ERJ3GEYJ 102 V (1 k) | B | 37.7/98.5 |
| R426 | 7030003440 | S.RES | ERJ3GEYJ 102 V (1 k) | B | 51.2/98.5 |
| R427 | 7030003440 | S.RES | ERJ3GEYJ 102 V (1 k) | B | 39.3/98.5 |
| R428 | 7030003440 | S.RES | ERJ3GEYJ 102 V (1 k) | B | 52.8/98.5 |
| R429 | 7030003440 | S.RES | ERJ3GEYJ 102 V (1 k) | B | 40.9/98.5 |
| R430 | 7030003440 | S.RES | ERJ3GEYJ 102 V (1 k) | B | 54.4/98.5 |
| R431 | 7030003440 | S.RES | ERJ3GEYJ 102 V (1 k) | B | 42.5/98.5 |
| R432 | 7030003440 | S.RES | ERJ3GEYJ 102 V (1 k) | B | 56/98.5 |
| | | | | | |
| C1 | 4510008540 | S.ELE | EEE1CA100SR | T | 42.6/80.3 |
| C2 | 4030011600 | S.CER | C1608 JB 1E 104K-T | T | 45.8/82.3 |
| C3 | 4030006880 | S.CER | C1608 JB 1H 472K-T | B | 89.5/100 |
| C4 | 4030006900 | S.CER | C1608 JB 1H 103K-T | T | 56/74.7 |
| C5 | 4030006900 | S.CER | C1608 JB 1H 103K-T | T | 58.6/72.9 |
| C6 | 4030006880 | S.CER | C1608 JB 1H 472K-T | T | 74.6/74.7 |
| C7 | 4030017810 | S.CER | C1608 CH 1H 102J-T | T | 75.3/76.6 |
| C8 | 4030011600 | S.CER | C1608 JB 1E 104K-T | T | 56/81.3 |
| C9 | 4030009990 | S.CER | C1608 CH 1H 200J-T | T | 75.3/80.5 |
| C10 | 4030011600 | S.CER | C1608 JB 1E 104K-T | T | 51.7/79.8 |
| C11 | 4030006880 | S.CER | C1608 JB 1H 472K-T | T | 76.6/78.2 |
| C12 | 4030009990 | S.CER | C1608 CH 1H 200J-T | T | 76.6/81.5 |
| C13 | 4510008870 | S.ELE | EEE1AA471UP | T | 48.5/56.6 |
| C14 | 4030011600 | S.CER | C1608 JB 1E 104K-T | T | 60.7/55.3 |
| C15 | 4030011600 | S.CER | C1608 JB 1E 104K-T | T | 67.3/53.7 |
| C16 | 4510008500 | S.ELE | EEE1CA101WP | T | 66.6/48.8 |
| C17 | 4510008550 | S.ELE | EEE1HA010SR | T | 133.3/100.5 |
| C18 | 4510008550 | S.ELE | EEE1HA010SR | T | 133.3/95.7 |
| C19 | 4510008550 | S.ELE | EEE1HA010SR | T | 138.4/91.9 |
| C20 | 4510008550 | S.ELE | EEE1HA010SR | T | 133.3/89.7 |
| C21 | 4510008550 | S.ELE | EEE1HA010SR | T | 138.4/85.3 |
| C22 | 4510008550 | S.ELE | EEE1HA010SR | T | 133.3/83.1 |
| C23 | 4510008550 | S.ELE | EEE1HA010SR | T | 138.4/78.6 |
| C24 | 4510008550 | S.ELE | EEE1HA010SR | T | 133.3/76.5 |
| C25 | 4030011600 | S.CER | C1608 JB 1E 104K-T | T | 53.6/57.7 |
| C26 | 4030006880 | S.CER | C1608 JB 1H 472K-T | T | 61/58.2 |
| C38 | 4030011600 | S.CER | C1608 JB 1E 104K-T | T | 91.3/87.5 |
| C39 | 4510008870 | S.ELE | EEE1AA471UP | T | 57.9/49.8 |
| C40 | 4030011600 | S.CER | C1608 JB 1E 104K-T | T | 84/70.6 |
| C41 | 4030011600 | S.CER | C1608 JB 1E 104K-T | T | 78.5/73.2 |
| C43 | 4030006880 | S.CER | C1608 JB 1H 472K-T | T | 88.8/95.5 |
| C66 | 4510008540 | S.ELE | EEE1CA100SR | T | 106.6/81.6 |
| C68 | 4030011600 | S.CER | C1608 JB 1E 104K-T | B | 103.6/82.8 |

## [CTRL BOARD]

| REF NO. | ORDER NO. | DESCRIPTION | | M. | H/V LOCATION |
|---|---|---|---|---|---|
| C69 | 4030011600 | S.CER | C1608 JB 1E 104K-T | T | 118.4/79.9 |
| C70 | 4030011600 | S.CER | C1608 JB 1E 104K-T | T | 95.8/80.5 |
| C71 | 4030011600 | S.CER | C1608 JB 1E 104K-T | T | 106.9/77.6 |
| C72 | 4510008540 | S.ELE | EEE1CA100SR | T | 111.6/83.3 |
| C88 | 4030011600 | S.CER | C1608 JB 1E 104K-T | B | 7.8/81.8 |
| C102 | 4010005530 | CER | HM60SJ SL 020C 500V | | |
| C103 | 4010005530 | CER | HM60SJ SL 020C 500V | | |
| C104 | 4610002250 | TRI | TZ03R200Y169B00 | | |
| C105 | 4030011540 | S.CER | C1608 CH 1H 750J-T | B | 13.1/28.5 |
| C106 | 4030011540 | S.CER | C1608 CH 1H 750J-T | T | 25.8/33.1 |
| C107 | 4030017810 | S.CER | C1608 CH 1H 102J-T | T | 12.2/36 |
| C108 | 4030017810 | S.CER | C1608 CH 1H 102J-T | T | 25.8/35.5 |
| C109 | 4030006880 | S.CER | C1608 JB 1H 472K-T | B | 21.6/38.4 |
| C110 | 4030006880 | S.CER | C1608 JB 1H 472K-T | B | 18.5/38.4 |
| C111 | 4510008540 | S.ELE | EEE1CA100SR | T | 25.4/45.8 |
| C112 | 4510008540 | S.ELE | EEE1CA100SR | T | 18.8/46.4 |
| C113 | 4030006880 | S.CER | C1608 JB 1H 472K-T | T | 16.3/41.8 |
| C114 | 4030006880 | S.CER | C1608 JB 1H 472K-T | T | 23/41.8 |
| C115 | 4030007100 | S.CER | C1608 CH 1H 560J-T | B | 13.1/26.9 |
| C116 | 4030011540 | S.CER | C1608 CH 1H 750J-T | T | 25.8/34.3 |
| C119 | 4030007100 | S.CER | C1608 CH 1H 560J-T | T | 16.9/24.1 |
| C151 | 4010005540 | CER | HM60SJ SL 030C 500V | | |
| C152 | 4030007070 | S.CER | C1608 CH 1H 330J-T | T | 33/34.3 |
| C153 | 4030007120 | S.CER | C1608 CH 1H 820J-T | T | 32.3/35.6 |
| C154 | 4030007070 | S.CER | C1608 CH 1H 330J-T | T | 38.5/34.5 |
| C155 | 4030007120 | S.CER | C1608 CH 1H 820J-T | T | 35.9/34.5 |
| C156 | 4030006880 | S.CER | C1608 JB 1H 472K-T | T | 29.8/37.5 |
| C157 | 4030006880 | S.CER | C1608 JB 1H 472K-T | T | 41.6/38.4 |
| C158 | 4030007060 | S.CER | C1608 CH 1H 270J-T | T | 29.7/35.6 |
| C159 | 4030006880 | S.CER | C1608 JB 1H 472K-T | T | 34.4/38.4 |
| C161 | 4030006880 | S.CER | C1608 JB 1H 472K-T | T | 45.2/51.5 |
| C162 | 4550003120 | S.TAN | TEESVD2 1A 476M12R | T | 46.7/46.3 |
| C163 | 4030007170 | S.CER | C1608 CH 1H 221J-T | T | 30.1/59.5 |
| C164 | 4030007170 | S.CER | C1608 CH 1H 221J-T | T | 31.5/55.6 |
| C165 | 4030006880 | S.CER | C1608 JB 1H 472K-T | T | 31.5/51.7 |
| C171 | 4030006880 | S.CER | C1608 JB 1H 472K-T | B | 40.2/37.7 |
| C173 | 4030006880 | S.CER | C1608 JB 1H 472K-T | T | 28.3/48.4 |
| C174 | 4030006880 | S.CER | C1608 JB 1H 472K-T | T | 42.2/49.6 |
| C175 | 4030006880 | S.CER | C1608 JB 1H 472K-T | T | 35.9/49.8 |
| C180 | 4030011600 | S.CER | C1608 JB 1E 104K-T | T | 28.3/49.7 |
| C181 | 4030011600 | S.CER | C1608 JB 1E 104K-T | T | 42.2/48.3 |
| C201 | 4010005580 | CER | HM60SJ SL 070D 500V | | |
| C202 | 4010005520 | CER | HM60SJ SL 010C 500V | | |
| C204 | 4030011570 | S.CER | CM105 CH 101G 50AT | T | 55.3/36.9 |
| C205 | 4030016550 | S.CER | CM105 CH 151G 50AT | T | 51.4/36.9 |
| C206 | 4030009530 | S.CER | C1608 CH 1H 030B-T | T | 52.7/36.9 |
| C207 | 4030006880 | S.CER | C1608 JB 1H 472K-T | T | 49.8/39.3 |
| C208 | 4030006880 | S.CER | C1608 JB 1H 472K-T | T | 56.1/40 |
| C209 | 4030017810 | S.CER | C1608 CH 1H 102J-T | T | 51.7/40 |
| C210 | 4030006880 | S.CER | C1608 JB 1H 472K-T | T | 53.5/40 |
| C211 | 4030006880 | S.CER | C1608 JB 1H 472K-T | T | 14.4/49.4 |
| C212 | 4030006880 | S.CER | C1608 JB 1H 472K-T | T | 23.8/49.4 |
| C213 | 4030006880 | S.CER | C1608 JB 1H 472K-T | B | 19.7/55.7 |
| C214 | 4030007170 | S.CER | C1608 CH 1H 221J-T | T | 14.7/59.4 |
| C215 | 4030007170 | S.CER | C1608 CH 1H 221J-T | T | 21.4/59.4 |
| C216 | 4030011340 | S.CER | C1608 CH 1H 471J-T | T | 15.4/61.4 |
| C217 | 4030011340 | S.CER | C1608 CH 1H 471J-T | T | 20.6/61.4 |
| C218 | 4030006880 | S.CER | C1608 JB 1H 472K-T | B | 18.2/54.1 |
| C252 | 4030006880 | S.CER | C1608 JB 1H 472K-T | T | 72.9/33.3 |
| C253 | 4030006880 | S.CER | C1608 JB 1H 472K-T | T | 76.6/38.3 |
| C254 | 4030006880 | S.CER | C1608 JB 1H 472K-T | T | 72.9/48.1 |
| C255 | 4030006880 | S.CER | C1608 JB 1H 472K-T | T | 73/38.2 |
| C301 | 4010005520 | CER | HM60SJ SL 010C 500V | | |
| C302 | 4030007030 | S.CER | C1608 CH 1H 150J-T | T | 85.5/56.6 |
| C303 | 4030007050 | S.CER | C1608 CH 1H 220J-T | T | 85.5/59.2 |
| C304 | 4030017810 | S.CER | C1608 CH 1H 102J-T | T | 83.7/60.5 |
| C305 | 4030017810 | S.CER | C1608 CH 1H 102J-T | T | 90.3/61.3 |
| C307 | 4030006880 | S.CER | C1608 JB 1H 472K-T | T | 78.7/55.8 |
| C308 | 4030006880 | S.CER | C1608 JB 1H 472K-T | T | 77.9/59.7 |
| C309 | 4030011600 | S.CER | C1608 JB 1E 104K-T | T | 68.8/59.8 |
| C310 | 4030009530 | S.CER | C1608 CH 1H 030B-T | T | 85.5/57.9 |
| C417 | 4510008540 | S.ELE | EEE1CA100SR | T | 22.6/77.6 |
| C418 | 4510008540 | S.ELE | EEE1CA100SR | T | 40.6/85.6 |
| C419 | 4030006880 | S.CER | C1608 JB 1H 472K-T | T | 19.6/78.7 |
| C420 | 4030006880 | S.CER | C1608 JB 1H 472K-T | T | 38.4/79.2 |
| | | | | | |
| RL251 | 6330001530 | RLY | NR-HD (5V) AE5349 | | |
| RL252 | 6330001460 | RLY | FTR-F1CA012V | | |
| RL253 | 6330001460 | RLY | FTR-F1CA012V | | |
| | | | | | |
| CP1 | 6910009670 | S.CHK | HK3-S-T | T | 67.7/100.1 |
| CP101 | 6910009670 | S.CHK | HK3-S-T | T | 5/83.4 |
| | | | | | |
| J1 | 6510023771 | S.CNR | 52793-2470 (2490) | T | 101.8/99.6 |
| J2 | 6510023761 | S.CNR | S10B-PH-SM4-TB (LF) (SN) | T | 148.3/82.8 |
| J51 | 6510023771 | S.CNR | 52793-2470 (2490) | T | 43.9/99.6 |
| J52 | 6510022031 | S.CNR | B10B-ZR-SM4-TF (LF) (SN) | T | 133/2.9 |
| J53 | 6510021431 | S.CNR | S8B-ZR-SM4A-TF (LF) (SN) | T | 134.6/65 |
| J101 | 6510017920 | CNR | 1811P342 | | |
| J251 | 6510017920 | CNR | 1811P342 | | |
| J252 | 6510017920 | CNR | 1811P342 | | |
| J301 | 6510017920 | CNR | 1811P342 | | |
| J351 | 6510007020 | CNR | TMP-J01X-V6 | | |
| | | | | | |
| W1 | 9029804001 | WIR | 72/99/040/X98/X98 | | |
| | | | | | |
| EP1 | 9040902903 | TUB | IRRAX 0.7 (d) L=22 mm | | |

M.=Mounted side (T: Mounted on the Top side, B: Mounted on the Bottom side)
S.=Surface mount

## [ANT-SW UNIT]

| REF NO. | ORDER NO. | DESCRIPTION | | M. | H/V LOCATION |
|---|---|---|---|---|---|
| IC11 | 1130011510 | S.IC | BU2099FV-E2 | T | 160.6/33.6 |
| IC12 | 1180002391 | S.REG | S-812C33AMC-C2N-G | T | 152.4/28.7 |
| Q11 | 1590001001 | S.TR | RN2427(RE85R,F) | T | 156.9/38.6 |
| Q12 | 1590001001 | S.TR | RN2427(RE85R,F) | T | 152.3/36.9 |
| Q13 | 1590001001 | S.TR | RN2427(RE85R,F) | T | 164.7/38.5 |
| Q14 | 1590001001 | S.TR | RN2427(RE85R,F) | T | 164.7/17.5 |
| D51 | 1750000550 | S.DIO | 1SS355 TE-17 | T | 161.9/13.3 |
| D52 | 1750000550 | S.DIO | 1SS355 TE-17 | T | 140.3/42.9 |
| D53 | 1750000550 | S.DIO | 1SS355 TE-17 | T | 115.1/41.4 |
| D61 | 1750000550 | S.DIO | 1SS355 TE-17 | T | 118.9/19.7 |
| D62 | 1750000550 | S.DIO | 1SS355 TE-17 | T | 107.1/43 |
| D63 | 1750000550 | S.DIO | 1SS355 TE-17 | T | 79/43.6 |
| D71 | 1750000550 | S.DIO | 1SS355 TE-17 | T | 68.7/21.4 |
| D72 | 1750000550 | S.DIO | 1SS355 TE-17 | T | 61.6/42.9 |
| D73 | 1750000550 | S.DIO | 1SS355 TE-17 | T | 65.8/43.4 |
| D81 | 1750000550 | S.DIO | 1SS355 TE-17 | T | 36.9/19.7 |
| D82 | 1750000550 | S.DIO | 1SS355 TE-17 | T | 41.4/45.2 |
| D83 | 1750000550 | S.DIO | 1SS355 TE-17 | T | 28.2/45.3 |
| D84 | 1750000550 | S.DIO | 1SS355 TE-17 | T | 25.8/43 |
| L1 | 6200003590 | S.COL | EXCCL3225U1 | T | 155.7/27.5 |
| L2 | 6110001670 | COL | LA-253 | | |
| R1 | 7540000100 | ABS | SRYH-350L | | |
| R2 | 7540000130 | ABS | 2P-50A-301 | | |
| R3 | 7540000130 | ABS | 2P-50A-301 | | |
| R11 | 7030003320 | S.RES | ERJ3GEYJ 101 V (100) | T | 165.5/27.4 |
| R12 | 7030003320 | S.RES | ERJ3GEYJ 101 V (100) | T | 164.2/27.4 |
| R13 | 7030003320 | S.RES | ERJ3GEYJ 101 V (100) | T | 162.9/27.4 |
| R14 | 7030003320 | S.RES | ERJ3GEYJ 101 V (100) | T | 166.2/33.9 |
| R15 | 7030003320 | S.RES | ERJ3GEYJ 101 V (100) | T | 148.7/31.6 |
| R16 | 7030003320 | S.RES | ERJ3GEYJ 101 V (100) | T | 151.5/31.6 |
| R17 | 7030003320 | S.RES | ERJ3GEYJ 101 V (100) | T | 154.7/39.4 |
| R18 | 7030003320 | S.RES | ERJ3GEYJ 101 V (100) | T | 151.4/32.9 |
| R19 | 7030003320 | S.RES | ERJ3GEYJ 101 V (100) | T | 151.4/34.2 |
| R20 | 7030003320 | S.RES | ERJ3GEYJ 101 V (100) | T | 152.1/39.1 |
| R21 | 7030003320 | S.RES | ERJ3GEYJ 101 V (100) | T | 154.7/36.6 |
| R22 | 7030003320 | S.RES | ERJ3GEYJ 101 V (100) | T | 166.9/38.7 |
| R23 | 7030003320 | S.RES | ERJ3GEYJ 101 V (100) | T | 162.3/38.9 |
| R24 | 7030003320 | S.RES | ERJ3GEYJ 101 V (100) | T | 161/39.1 |
| R25 | 7030003320 | S.RES | ERJ3GEYJ 101 V (100) | T | 159.7/39.1 |
| R26 | 7030003320 | S.RES | ERJ3GEYJ 101 V (100) | T | 162.7/15.6 |
| C1 | 4010005610 | CER | HM60SJ SL 100D 500V | | |
| C2 | 4010005660 | CER | HM60SJ SL 220J 500V | | |
| C11 | 4030011600 | S.CER | C1608 JB 1E 104K-T | T | 160/27.6 |
| C12 | 4030011600 | S.CER | C1608 JB 1E 104K-T | T | 158.7/27.6 |
| C51 | 4030006880 | S.CER | C1608 JB 1H 472K-T | T | 163.5/13.6 |
| C52 | 4030006880 | S.CER | C1608 JB 1H 472K-T | T | 144.5/41.3 |
| C53 | 4030006880 | S.CER | C1608 JB 1H 472K-T | T | 113.5/41.7 |
| C61 | 4030006880 | S.CER | C1608 JB 1H 472K-T | T | 119.2/21.3 |
| C62 | 4030006880 | S.CER | C1608 JB 1H 472K-T | T | 107.4/44.5 |
| C63 | 4030006880 | S.CER | C1608 JB 1H 472K-T | T | 77.5/43.6 |
| C71 | 4030006880 | S.CER | C1608 JB 1H 472K-T | T | 69/19.9 |
| C72 | 4030006880 | S.CER | C1608 JB 1H 472K-T | T | 61.6/44.5 |
| C73 | 4030006880 | S.CER | C1608 JB 1H 472K-T | T | 73/43.4 |
| C81 | 4030006880 | S.CER | C1608 JB 1H 472K-T | T | 37.2/21.3 |
| C82 | 4030006880 | S.CER | C1608 JB 1H 472K-T | T | 42.9/45.2 |
| C83 | 4030006880 | S.CER | C1608 JB 1H 472K-T | T | 26.6/45.6 |
| C84 | 4030006880 | S.CER | C1608 JB 1H 472K-T | T | 25/45.6 |
| RL51 | 6330001460 | RLY | FTR-F1CA012V | | |
| RL52 | 6330001780 | RLY | FTR-MYAA012D | | |
| RL53 | 6330001780 | RLY | FTR-MYAA012D | | |
| RL61 | 6330001460 | RLY | FTR-F1CA012V | | |
| RL62 | 6330001780 | RLY | FTR-MYAA012D | | |
| RL63 | 6330001780 | RLY | FTR-MYAA012D | | |
| RL71 | 6330001460 | RLY | FTR-F1CA012V | | |
| RL72 | 6330001780 | RLY | FTR-MYAA012D | | |
| RL73 | 6330001780 | RLY | FTR-MYAA012D | | |
| RL81 | 6330001460 | RLY | FTR-F1CA012V | | |
| RL82 | 6330001780 | RLY | FTR-MYAA012D | | |
| RL83 | 6330001780 | RLY | FTR-MYAA012D | | |
| RL84 | 6330001780 | RLY | FTR-MYAA012D | | |
| J1 | 6510017930 | CNR | 1771P145-20 | | |
| J2 | 6510007020 | CNR | TMP-J01X-V6 | | |
| J3 | 6510007020 | CNR | TMP-J01X-V6 | | |
| J4 | 6510019971 | S.CNR | 52808-1071 | T | 153/22 |
| J51 | 6510000410 | CNR | MR-DS-E 02 | | |
| J61 | 6510000410 | CNR | MR-DS-E 02 | | |
| J71 | 6510000410 | CNR | MR-DS-E 02 | | |
| J81 | 6510000410 | CNR | MR-DS-E 02 | | |

## [OSC UNIT]

| REF NO. | ORDER NO. | DESCRIPTION | | M. | H/V LOCATION |
|---|---|---|---|---|---|
| IC10 | 1180002610 | S.REG | BA12FP-E2 | T | 37.8/20 |
| IC91 | 1190002001 | S.IC | AD5260BRUZ50 | T | 26.8/12 |
| IC92 | 1130005721 | S.IC | TC7W04F (TE12L,F) | T | 23.7/6.1 |
| Q10 | 1590000680 | S.TR | DTC114EUA T106 | T | 32.4/35 |
| Q11 | 1590000680 | S.TR | DTC114EUA T106 | T | 22.1/42.4 |
| Q12 | 1590000680 | S.TR | DTC114EUA T106 | T | 29.1/41.5 |
| Q13 | 1590000680 | S.TR | DTC114EUA T106 | T | 31.6/41.5 |
| Q21 | 1530002060 | S.TR | 2SC4081 T106 R | T | 11.3/6.3 |
| Q22 | 1530002601 | S.TR | 2SC4215-O (TE85R,F) | T | 10.4/17.8 |
| Q23 | 1590000680 | S.TR | DTC114EUA T106 | T | 13/11 |
| Q42 | 1530002601 | S.TR | 2SC4215-O (TE85R,F) | T | 18.8/18.8 |
| Q43 | 1590000680 | S.TR | DTC114EUA T106 | T | 19.6/11.7 |
| Q61 | 1530002060 | S.TR | 2SC4081 T106 R | T | 26.1/36.1 |
| Q62 | 1530002060 | S.TR | 2SC4081 T106 R | T | 20.6/38.6 |
| Q70 | 1530002060 | S.TR | 2SC4081 T106 R | T | 9.9/41.2 |
| Q101 | 1530002700 | S.TR | 2SC4097 T106Q | T | 36.7/40 |
| D10 | 1790001250 | S.DIO | MA2S111-(TX) | T | 31.4/31.7 |
| D11 | 1790001250 | S.DIO | MA2S111-(TX) | T | 16.5/38.2 |
| D71 | 1750000381 | S.DIO | 1SS312 (TE85L,F) | T | 29.8/34.9 |
| D72 | 1750000381 | S.DIO | 1SS312 (TE85L,F) | T | 29.9/37.6 |
| X1 | 6050012210 | XTL | CR-772.OCVXO-148A | | |
| L1 | 6200003950 | S.COL | HF50ACC 322513-T | T | 38.8/43.7 |
| L2 | 6200003950 | S.COL | HF50ACC 322513-T | T | 35.8/43.7 |
| L10 | 6200003950 | S.COL | HF50ACC 322513-T | T | 94.7/30.6 |
| L20 | 6200005491 | S.COL | NLV32T-331J | T | 14.7/1.9 |
| L21 | 6200003261 | S.COL | NLV32T-101J | T | 6.9/11.2 |
| L22 | 6200003261 | S.COL | NLV32T-101J | T | 7.9/14.7 |
| L23 | 6200003041 | S.COL | NLV32T-R68J | T | 6.9/20.3 |
| L24 | 6200003051 | S.COL | NLV32T-R82J | T | 6.2/23.8 |
| L41 | 6200003261 | S.COL | NLV32T-101J | T | 15.3/13.7 |
| L42 | 6200003261 | S.COL | NLV32T-101J | T | 14.7/17.2 |
| L43 | 6200003041 | S.COL | NLV32T-R68J | T | 15.3/22.4 |
| L44 | 6200003051 | S.COL | NLV32T-R82J | T | 18.8/24.2 |
| L61 | 6150004170 | COL | LS-476 | | |
| L62 | 6150004170 | COL | LS-476 | | |
| L91 | 6200003950 | S.COL | HF50ACC 322513-T | T | 23.6/20.3 |
| L92 | 6200003950 | S.COL | HF50ACC 322513-T | T | 19.4/4.3 |
| R1 | 7030003440 | S.RES | ERJ3GEYJ 102 V (1 k) | T | 32.4/44.3 |
| R2 | 7030003440 | S.RES | ERJ3GEYJ 102 V (1 k) | T | 29.8/44.2 |
| R3 | 7030003440 | S.RES | ERJ3GEYJ 102 V (1 k) | T | 25.8/44.2 |
| R11 | 7030003200 | S.RES | ERJ3GEYJ 100 V (10) | T | 33.3/32.3 |
| R12 | 7030003200 | S.RES | ERJ3GEYJ 100 V (10) | T | 16.7/40.3 |
| R13 | 7030003440 | S.RES | ERJ3GEYJ 102 V (1 k) | T | 16.8/11.6 |
| R20 | 7030003240 | S.RES | ERJ3GEYJ 220 V (22) | T | 11.3/1.8 |
| R21 | 7030003560 | S.RES | ERJ3GEYJ 103 V (10 k) | T | 11.1/4.4 |
| R22 | 7030003370 | S.RES | ERJ3GEYJ 271 V (270) | T | 15.5/7.9 |
| R23 | 7030004040 | S.RES | ERJ3GEYJ 4R7 V (4.7) | T | 11.4/14 |
| R24 | 7030003370 | S.RES | ERJ3GEYJ 271 V (270) | T | 12.3/17.7 |
| R25 | 7030003500 | S.RES | ERJ3GEYJ 332 V (3.3 k) | T | 10.1/14.2 |
| R26 | 7030003480 | S.RES | ERJ3GEYJ 222 V (2.2 k) | T | 12.8/9.1 |
| R27 | 7030003360 | S.RES | ERJ3GEYJ 221 V (220) | T | 5.8/13.9 |
| R28 | 7030003440 | S.RES | ERJ3GEYJ 102 V (1 k) | T | 10.2/11.9 |
| R43 | 7030003240 | S.RES | ERJ3GEYJ 220 V (22) | T | 19.7/14.2 |
| R44 | 7030003370 | S.RES | ERJ3GEYJ 271 V (270) | T | 20.7/18.6 |
| R45 | 7030003500 | S.RES | ERJ3GEYJ 332 V (3.3 k) | T | 17.9/15.1 |
| R46 | 7030003480 | S.RES | ERJ3GEYJ 222 V (2.2 k) | T | 19.4/9.8 |
| R47 | 7030003290 | S.RES | ERJ3GEYJ 560 V (56) | T | 16.8/17.9 |
| R61 | 7030003240 | S.RES | ERJ3GEYJ 220 V (22) | T | 22.2/35.4 |
| R62 | 7030003560 | S.RES | ERJ3GEYJ 103 V (10 k) | T | 26.3/34.2 |
| R63 | 7030003380 | S.RES | ERJ3GEYJ 331 V (330) | T | 25.9/38 |
| R64 | 7030003280 | S.RES | ERJ3GEYJ 470 V (47) | T | 20.8/40.5 |
| R65 | 7030003400 | S.RES | ERJ3GEYJ 471 V (470) | T | 20/34.8 |
| R67 | 7030003560 | S.RES | ERJ3GEYJ 103 V (10 k) | T | 19.6/36.7 |
| R68 | 7030003550 | S.RES | ERJ3GEYJ 822 V (8.2 k) | T | 22.2/36.7 |
| R71 | 7030003340 | S.RES | ERJ3GEYJ 151 V (150) | T | 32.6/38.2 |
| R72 | 7030003270 | S.RES | ERJ3GEYJ 390 V (39) | T | 31.2/39.5 |
| R73 | 7030003340 | S.RES | ERJ3GEYJ 151 V (150) | T | 28.6/39.5 |
| R75 | 7030003280 | S.RES | ERJ3GEYJ 470 V (47) | T | 16.2/43.1 |
| R77 | 7030003320 | S.RES | ERJ3GEYJ 101 V (100) | T | 12.5/44.6 |
| R78 | 7030003470 | S.RES | ERJ3GEYJ 182 V (1.8 k) | T | 8/41 |
| R79 | 7030003480 | S.RES | ERJ3GEYJ 222 V (2.2 k) | T | 6.1/41.6 |
| R80 | 7030003360 | S.RES | ERJ3GEYJ 221 V (220) | T | 11.8/41 |
| R82 | 7030003280 | S.RES | ERJ3GEYJ 470 V (47) | T | 17.5/43.1 |
| R91 | 7030006091 | S.RES | ERA3YED 822V (8.2 k) | T | 19.5/7.1 |
| R92 | 7030005341 | S.RES | ERA3YED 332V (3.3 k) | T | 19.5/8.4 |
| R93 | 7030003560 | S.RES | ERJ3GEYJ 103 V (10 k) | T | 25.6/1.4 |
| R94 | 7030003540 | S.RES | ERJ3GEYJ 682 V (6.8 k) | T | 25.6/2.7 |
| R95 | 7030003320 | S.RES | ERJ3GEYJ 101 V (100) | T | 22.4/16.7 |
| R96 | 7030003440 | S.RES | ERJ3GEYJ 102 V (1 k) | T | 32/14.1 |
| R97 | 7030003440 | S.RES | ERJ3GEYJ 102 V (1 k) | T | 28.6/16.1 |
| R98 | 7030003640 | S.RES | ERJ3GEYJ 473 V (47 k) | T | 27.3/16.1 |
| R99 | 7030003480 | S.RES | ERJ3GEYJ 222 V (2.2 k) | T | 22.4/10.1 |
| R100 | 7030003640 | S.RES | ERJ3GEYJ 473 V (47 k) | T | 27.2/6.4 |
| R101 | 7030003360 | S.RES | ERJ3GEYJ 221 V (220) | T | 36.9/38.1 |
| R102 | 7030005981 | S.RES | ERA3YED 333V (33 k) | T | 32.4/6.7 |
| C1 | 4030006880 | S.CER | C1608 JB 1H 472K-T | T | 39.6/47.6 |
| C2 | 4030006880 | S.CER | C1608 JB 1H 472K-T | T | 31.1/44.3 |
| C3 | 4030006880 | S.CER | C1608 JB 1H 472K-T | T | 33.7/44 |
| C4 | 4030006880 | S.CER | C1608 JB 1H 472K-T | T | 30.5/8.6 |
| C5 | 4510008550 | S.ELE | EEE1HA010SR | T | 30.6/2.6 |
| C6 | 4030006880 | S.CER | C1608 JB 1H 472K-T | T | 35/3.4 |
| C7 | 4510008550 | S.ELE | EEE1HA010SR | T | 38.7/2.6 |

M.=Mounted side (T: Mounted on the Top side, B: Mounted on the Bottom side)
S.=Surface mount

## [OSC UNIT]

| REF NO. | ORDER NO. | DESCRIPTION | | M. | H/V LOCATION |
|---|---|---|---|---|---|
| C8 | 4030011600 | S.CER | C1608 JB 1E 104K-T | T | 17.3/2.1 |
| C9 | 4030006880 | S.CER | C1608 JB 1H 472K-T | T | 27.1/43.1 |
| C10 | 4510008680 | S.ELE | EEE1EA220SP | T | 29.7/21.3 |
| C11 | 4030004760 | S.CER | C2012 JF 1H 104Z-T | T | 35.9/13 |
| C12 | 4030006880 | S.CER | C1608 JB 1H 472K-T | T | 39.2/12.8 |
| C13 | 4510008680 | S.ELE | EEE1EA220SP | T | 37.1/8.6 |
| C14 | 4030006880 | S.CER | C1608 JB 1H 472K-T | T | 94.7/33.9 |
| C15 | 4030011600 | S.CER | C1608 JB 1E 104K-T | T | 39.2/14.1 |
| C16 | 4030011600 | S.CER | C1608 JB 1E 104K-T | T | 29.6/32.3 |
| C17 | 4030011600 | S.CER | C1608 JB 1E 104K-T | T | 19.4/41.8 |
| C18 | 4030011600 | S.CER | C1608 JB 1E 104K-T | T | 17.8/38.3 |
| C19 | 4030011600 | S.CER | C1608 JB 1E 104K-T | T | 31.5/33 |
| C20 | 4030011600 | S.CER | C1608 JB 1E 104K-T | T | 13.3/5.2 |
| C21 | 4030011600 | S.CER | C1608 JB 1E 104K-T | T | 11.3/3.1 |
| C22 | 4030011600 | S.CER | C1608 JB 1E 104K-T | T | 15/11 |
| C23 | 4030011600 | S.CER | C1608 JB 1E 104K-T | T | 11.9/15.8 |
| C24 | 4030011600 | S.CER | C1608 JB 1E 104K-T | T | 12.7/14 |
| C25 | 4030011600 | S.CER | C1608 JB 1E 104K-T | T | 10.2/19.8 |
| C26 | 4030017800 | S.CER | C1608 CH 1H 561J-T | T | 10.2/21.1 |
| C27 | 4030007120 | S.CER | C1608 CH 1H 820J-T | T | 7.7/18.2 |
| C28 | 4030011340 | S.CER | C1608 CH 1H 471J-T | T | 8.9/22.5 |
| C29 | 4030011330 | S.CER | C1608 CH 1H 391J-T | T | 10.2/23.8 |
| C30 | 4030007050 | S.CER | C1608 CH 1H 220J-T | T | 8.4/24.5 |
| C31 | 4030017800 | S.CER | C1608 CH 1H 561J-T | T | 10.2/25.1 |
| C32 | 4030011600 | S.CER | C1608 JB 1E 104K-T | T | 10.8/9.2 |
| C33 | 4030011600 | S.CER | C1608 JB 1E 104K-T | T | 9.5/10.1 |
| C42 | 4030011600 | S.CER | C1608 JB 1E 104K-T | T | 21.6/12.7 |
| C43 | 4030011600 | S.CER | C1608 JB 1E 104K-T | T | 20.1/16.8 |
| C44 | 4030011600 | S.CER | C1608 JB 1E 104K-T | T | 19.9/15.5 |
| C45 | 4030011600 | S.CER | C1608 JB 1E 104K-T | T | 13.2/20.6 |
| C46 | 4030017800 | S.CER | C1608 CH 1H 561J-T | T | 15/19.8 |
| C47 | 4030007120 | S.CER | C1608 CH 1H 820J-T | T | 13.2/23.2 |
| C48 | 4030011340 | S.CER | C1608 CH 1H 471J-T | T | 17.5/21.5 |
| C49 | 4030011330 | S.CER | C1608 CH 1H 391J-T | T | 18.8/21.5 |
| C50 | 4030007050 | S.CER | C1608 CH 1H 220J-T | T | 20.6/22.1 |
| C51 | 4030017800 | S.CER | C1608 CH 1H 561J-T | T | 21.7/24.4 |
| C52 | 4030011600 | S.CER | C1608 JB 1E 104K-T | T | 17.6/8.8 |
| C53 | 4030011600 | S.CER | C1608 JB 1E 104K-T | T | 16.3/9.7 |
| C61 | 4030011600 | S.CER | C1608 JB 1E 104K-T | T | 26.3/32.9 |
| C62 | 4030011600 | S.CER | C1608 JB 1E 104K-T | T | 24.1/36.1 |
| C63 | 4030011600 | S.CER | C1608 JB 1E 104K-T | T | 25.9/39.3 |
| C64 | 4030011600 | S.CER | C1608 JB 1E 104K-T | T | 22.7/34.1 |
| C66 | 4030007010 | S.CER | C1608 CH 1H 100D-T | T | 12.8/25.1 |
| C67 | 4030011600 | S.CER | C1608 JB 1E 104K-T | T | 17/35.4 |
| C71 | 4030006880 | S.CER | C1608 JB 1H 472K-T | T | 33.8/39.5 |
| C72 | 4030006880 | S.CER | C1608 JB 1H 472K-T | T | 14.4/45.4 |
| C73 | 4030006880 | S.CER | C1608 JB 1H 472K-T | T | 6.1/40.3 |
| C74 | 4030006880 | S.CER | C1608 JB 1H 472K-T | T | 10/43.2 |
| C75 | 4030006880 | S.CER | C1608 JB 1H 472K-T | T | 13.1/40.9 |
| C76 | 4030006880 | S.CER | C1608 JB 1H 472K-T | T | 19.4/45.4 |
| C77 | 4030011600 | S.CER | C1608 JB 1E 104K-T | T | 10.7/44.6 |
| C91 | 4030006880 | S.CER | C1608 JB 1H 472K-T | T | 25.5/16.4 |
| C92 | 4030006880 | S.CER | C1608 JB 1H 472K-T | T | 17.3/4.7 |
| C93 | 4030006880 | S.CER | C1608 JB 1H 472K-T | T | 22.1/2.7 |
| C94 | 4030006880 | S.CER | C1608 JB 1H 472K-T | T | 27.9/8.6 |
| C101 | 4550006480 | S.TAN | TEESVA 1C 475M8R | T | 40/38.9 |
| RL10 | 6330001750 | RLY | FTR-B4CA012Z | | |
| RL11 | 6330001750 | RLY | FTR-B4CA012Z | | |
| J2 | 6510019971 | S.CNR | 52808-1071 | T | 30.5/48.8 |
| J71 | 6510007020 | CNR | TMP-J01X-V6 | | |
| J72 | 6510007020 | CNR | TMP-J01X-V6 | | |
| J73 | 6510007020 | CNR | TMP-J01X-V6 | | |

## [DIGISEL UNIT]

| REF NO. | ORDER NO. | DESCRIPTION | | M. | H/V LOCATION |
|---|---|---|---|---|---|
| IC1 | 1130014370 | S.IC | CAT24C256XI | B | 18.9/51.9 |
| IC4 | 1130011510 | S.IC | BU2099FV-E2 | T | 29.9/55.8 |
| IC5 | 1130011510 | S.IC | BU2099FV-E2 | T | 18.5/55.8 |
| IC501 | 1130014370 | S.IC | CAT24C256XI | B | 17.5/26.4 |
| IC504 | 1130011510 | S.IC | BU2099FV-E2 | T | 28.3/29.2 |
| IC505 | 1130011510 | S.IC | BU2099FV-E2 | T | 18.1/29.3 |
| Q201 | 1530003851 | S.TR | 2SC5551F-TD-E | T | 48.5/52.8 |
| Q701 | 1530003851 | S.TR | 2SC5551F-TD-E | T | 49.7/21.3 |
| D21 | 1750000550 | S.DIO | 1SS355 TE-17 | B | 28.5/45.9 |
| D51 | 1750000550 | S.DIO | 1SS355 TE-17 | B | 60.7/57.2 |
| D52 | 1750000550 | S.DIO | 1SS355 TE-17 | B | 61.6/44.8 |
| D53 | 1750000550 | S.DIO | 1SS355 TE-17 | T | 53.1/59.2 |
| D54 | 1750000550 | S.DIO | 1SS355 TE-17 | B | 90.2/68.2 |
| D55 | 1750000550 | S.DIO | 1SS355 TE-17 | B | 69.5/68.4 |
| D56 | 1750000550 | S.DIO | 1SS355 TE-17 | B | 67.3/55.1 |
| D57 | 1750000550 | S.DIO | 1SS355 TE-17 | T | 66/48.7 |
| D58 | 1750000550 | S.DIO | 1SS355 TE-17 | B | 114.3/50.2 |
| D59 | 1750000550 | S.DIO | 1SS355 TE-17 | B | 90.5/51 |
| D60 | 1750000550 | S.DIO | 1SS355 TE-17 | B | 90.5/54.4 |
| D61 | 1750000550 | S.DIO | 1SS355 TE-17 | B | 114.3/53.5 |
| D62 | 1750000550 | S.DIO | 1SS355 TE-17 | B | 138.2/50.2 |
| D63 | 1750000550 | S.DIO | 1SS355 TE-17 | B | 138.2/53.7 |
| D64 | 1750000550 | S.DIO | 1SS355 TE-17 | B | 162.1/50.1 |
| D65 | 1750000550 | S.DIO | 1SS355 TE-17 | B | 162.1/53.7 |
| D66 | 1750000550 | S.DIO | 1SS355 TE-17 | B | 180.9/47.7 |
| D67 | 1750000550 | S.DIO | 1SS355 TE-17 | B | 114.3/57.2 |
| D68 | 1750000550 | S.DIO | 1SS355 TE-17 | T | 85.8/64.1 |
| D69 | 1750000550 | S.DIO | 1SS355 TE-17 | B | 183.4/63 |
| D70 | 1750000550 | S.DIO | 1SS355 TE-17 | B | 162.1/61.3 |
| D71 | 1750000550 | S.DIO | 1SS355 TE-17 | B | 162.1/57.5 |
| D72 | 1750000550 | S.DIO | 1SS355 TE-17 | B | 138.2/61.3 |
| D73 | 1750000550 | S.DIO | 1SS355 TE-17 | B | 138.2/57.5 |
| D74 | 1750000550 | S.DIO | 1SS355 TE-17 | B | 114.3/61.4 |
| D75 | 1750000550 | S.DIO | 1SS355 TE-17 | B | 90.5/59.1 |
| D201 | 1710001240 | DIO | L204BBB | | |
| D202 | 1710001240 | DIO | L204BBB | | |
| D203 | 1750000550 | S.DIO | 1SS355 TE-17 | B | 48.3/73.3 |
| D204 | 1750000550 | S.DIO | 1SS355 TE-17 | B | 46.1/73.3 |
| D205 | 1750000550 | S.DIO | 1SS355 TE-17 | B | 44.8/69.7 |
| D521 | 1750000550 | S.DIO | 1SS355 TE-17 | B | 25/35.2 |
| D551 | 1750000550 | S.DIO | 1SS355 TE-17 | B | 63.7/9.2 |
| D552 | 1750000550 | S.DIO | 1SS355 TE-17 | B | 61.7/23 |
| D553 | 1750000550 | S.DIO | 1SS355 TE-17 | B | 58/8.5 |
| D554 | 1750000550 | S.DIO | 1SS355 TE-17 | B | 91/12.8 |
| D555 | 1750000550 | S.DIO | 1SS355 TE-17 | T | 68.6/11.7 |
| D556 | 1750000550 | S.DIO | 1SS355 TE-17 | B | 67.2/24.9 |
| D557 | 1750000550 | S.DIO | 1SS355 TE-17 | B | 70.2/36.4 |
| D558 | 1750000550 | S.DIO | 1SS355 TE-17 | B | 114.3/27.1 |
| D559 | 1750000550 | S.DIO | 1SS355 TE-17 | B | 90.6/26.8 |
| D560 | 1750000550 | S.DIO | 1SS355 TE-17 | B | 90.6/30.3 |
| D561 | 1750000550 | S.DIO | 1SS355 TE-17 | B | 114.3/30.5 |
| D562 | 1750000550 | S.DIO | 1SS355 TE-17 | B | 138.2/27.1 |
| D563 | 1750000550 | S.DIO | 1SS355 TE-17 | B | 138.2/30.5 |
| D564 | 1750000550 | S.DIO | 1SS355 TE-17 | B | 162.1/27.1 |
| D565 | 1750000550 | S.DIO | 1SS355 TE-17 | B | 162.1/30.6 |
| D566 | 1750000550 | S.DIO | 1SS355 TE-17 | B | 182.5/33.5 |
| D567 | 1750000550 | S.DIO | 1SS355 TE-17 | B | 114.3/19.6 |
| D568 | 1750000550 | S.DIO | 1SS355 TE-17 | B | 90.7/19.6 |
| D569 | 1750000550 | S.DIO | 1SS355 TE-17 | B | 183.6/17.1 |
| D570 | 1750000550 | S.DIO | 1SS355 TE-17 | B | 162.1/19.7 |
| D571 | 1750000550 | S.DIO | 1SS355 TE-17 | B | 162.1/23.5 |
| D572 | 1750000550 | S.DIO | 1SS355 TE-17 | B | 138.2/23.5 |
| D573 | 1750000550 | S.DIO | 1SS355 TE-17 | B | 138.2/19.6 |
| D574 | 1750000550 | S.DIO | 1SS355 TE-17 | B | 114.3/23.4 |
| D575 | 1750000550 | S.DIO | 1SS355 TE-17 | B | 90.7/22.9 |
| D701 | 1710001240 | DIO | L204BBB | | |
| D702 | 1710001240 | DIO | L204BBB | | |
| D703 | 1750000550 | S.DIO | 1SS355 TE-17 | B | 47/9 |
| D704 | 1750000550 | S.DIO | 1SS355 TE-17 | B | 44.9/9 |
| D705 | 1750000550 | S.DIO | 1SS355 TE-17 | T | 51.8/34.3 |
| L1 | 6200003261 | S.COL | NLV32T-101J | B | 4.5/52 |
| L2 | 6200003950 | S.COL | HF50ACC 322513-T | B | 4.7/40 |
| L3 | 6200003261 | S.COL | NLV32T-101J | B | 4.5/48 |
| L4 | 6200003261 | S.COL | NLV32T-101J | B | 4.5/44 |
| L101 | 6140003980 | COL | LR-476 | | |
| L102 | 6140003990 | COL | LR-477 | | |
| L103 | 6140004001 | COL | LR-478A | | |
| L104 | 6140004010 | COL | LR-479 | | |
| L105 | 6140004020 | COL | LR-480 | | |
| L106 | 6140004030 | COL | LR-481 | | |
| L107 | 6110003930 | COL | LA-595 | | |
| L201 | 6180000920 | COL | LAL 03NA 221K | | |
| L203 | 6140003940 | COL | LR-493 | | |
| L503 | 6200003261 | S.COL | NLV32T-101J | B | 4.5/36 |
| L504 | 6200003261 | S.COL | NLV32T-101J | B | 4.5/32 |
| L601 | 6140003980 | COL | LR-476 | | |
| L602 | 6140003990 | COL | LR-477 | | |
| L603 | 6140004001 | COL | LR-478A | | |
| L604 | 6140004010 | COL | LR-479 | | |
| L605 | 6140004020 | COL | LR-480 | | |
| L606 | 6140004030 | COL | LR-481 | | |
| L607 | 6110003930 | COL | LA-595 | | |
| L701 | 6180000920 | COL | LAL 03NA 221K | | |
| L703 | 6140003940 | COL | LR-493 | | |
| R1 | 7030003680 | S.RES | ERJ3GEYJ 104 V (100 k) | B | 17.3/60.8 |
| R2 | 7030003560 | S.RES | ERJ3GEYJ 103 V (10 k) | B | 12.6/54.5 |

M.=Mounted side (T: Mounted on the Top side, B: Mounted on the Bottom side)
S.=Surface mount

## [DIGISEL UNIT]

| REF NO. | ORDER NO. | DESCRIPTION | M. | H/V LOCATION |
|---|---|---|---|---|
| R3 | 7030003560 | S.RES ERJ3GEYJ 103 V (10 k) | T | 26.1/51.6 |
| R4 | 7030003440 | S.RES ERJ3GEYJ 102 V (1 k) | T | 14.3/47.4 |
| R5 | 7030003440 | S.RES ERJ3GEYJ 102 V (1 k) | T | 15.7/44.8 |
| R6 | 7030003440 | S.RES ERJ3GEYJ 102 V (1 k) | T | 15.1/46.1 |
| R7 | 7030003440 | S.RES ERJ3GEYJ 102 V (1 k) | T | 4/52.9 |
| R8 | 7030003440 | S.RES ERJ3GEYJ 102 V (1 k) | T | 13.3/51.8 |
| R9 | 7030003360 | S.RES ERJ3GEYJ 221 V (220) | B | 32/45.9 |
| R10 | 7030003360 | S.RES ERJ3GEYJ 221 V (220) | T | 34.6/60 |
| R35 | 7030003360 | S.RES ERJ3GEYJ 221 V (220) | T | 27.9/62.4 |
| R36 | 7030003360 | S.RES ERJ3GEYJ 221 V (220) | T | 28.6/65.8 |
| R37 | 7030003360 | S.RES ERJ3GEYJ 221 V (220) | T | 29.3/62.4 |
| R38 | 7030003360 | S.RES ERJ3GEYJ 221 V (220) | T | 30/65.8 |
| R39 | 7030003360 | S.RES ERJ3GEYJ 221 V (220) | T | 30.7/62.4 |
| R40 | 7030003360 | S.RES ERJ3GEYJ 221 V (220) | T | 26.5/62.4 |
| R41 | 7030003360 | S.RES ERJ3GEYJ 221 V (220) | T | 27.2/65.8 |
| R42 | 7030003360 | S.RES ERJ3GEYJ 221 V (220) | T | 25.8/65.8 |
| R43 | 7030003360 | S.RES ERJ3GEYJ 221 V (220) | T | 25.1/62.4 |
| R44 | 7030003360 | S.RES ERJ3GEYJ 221 V (220) | T | 24.4/65.8 |
| R45 | 7030003360 | S.RES ERJ3GEYJ 221 V (220) | T | 23.7/62.4 |
| R46 | 7030003360 | S.RES ERJ3GEYJ 221 V (220) | T | 23/65.8 |
| R47 | 7030003360 | S.RES ERJ3GEYJ 221 V (220) | T | 21.2/62.4 |
| R48 | 7030003360 | S.RES ERJ3GEYJ 221 V (220) | T | 19.1/65.8 |
| R49 | 7030003360 | S.RES ERJ3GEYJ 221 V (220) | T | 18.4/62.4 |
| R50 | 7030003360 | S.RES ERJ3GEYJ 221 V (220) | T | 19.8/62.4 |
| R51 | 7030003360 | S.RES ERJ3GEYJ 221 V (220) | T | 20.5/65.8 |
| R52 | 7030003360 | S.RES ERJ3GEYJ 221 V (220) | T | 15.6/62.4 |
| R53 | 7030003360 | S.RES ERJ3GEYJ 221 V (220) | T | 14.9/65.8 |
| R54 | 7030003360 | S.RES ERJ3GEYJ 221 V (220) | T | 14.2/62.4 |
| R55 | 7030003360 | S.RES ERJ3GEYJ 221 V (220) | T | 16.3/65.8 |
| R56 | 7030003360 | S.RES ERJ3GEYJ 221 V (220) | T | 17/62.4 |
| R57 | 7030003360 | S.RES ERJ3GEYJ 221 V (220) | T | 17.7/65.8 |
| R58 | 7030003360 | S.RES ERJ3GEYJ 221 V (220) | T | 20.9/46.4 |
| R59 | 7030003440 | S.RES ERJ3GEYJ 102 V (1 k) | T | 14.9/49.7 |
| R100 | 7030000010 | S.RES MCR10EZHJ JPW (000) | B | 26/47.3 |
| R104 | 7030003560 | S.RES ERJ3GEYJ 103 V (10 k) | B | 145.1/64.1 |
| R105 | 7030003560 | S.RES ERJ3GEYJ 103 V (10 k) | B | 131.1/62.7 |
| R201 | 7030000380 | S.RES MCR10EZHJ 1 k | B | 49.4/55.6 |
| R202 | 7030000290 | S.RES MCR10EZHJ 180 (181) | B | 49.4/51.8 |
| R203 | 7030000220 | S.RES MCR10EZHJ 47 (470) | B | 49.4/53.7 |
| R204 | 7030003360 | S.RES ERJ3GEYJ 221 V (220) | B | 48.2/69.7 |
| R205 | 7030003350 | S.RES ERJ3GEYJ 181 V (180) | T | 54.5/46.5 |
| R206 | 7030003370 | S.RES ERJ3GEYJ 271 V (270) | B | 49.4/48.7 |
| R207 | 7030003560 | S.RES ERJ3GEYJ 103 V (10 k) | T | 57.6/48.7 |
| R208 | 7030000200 | S.RES MCR10EZHJ 33 (330) | B | 45.4/56.9 |
| R209 | 7030003240 | S.RES ERJ3GEYJ 220 V (22) | T | 44.2/53.9 |
| R210 | 7030003370 | S.RES ERJ3GEYJ 271 V (270) | B | 45.2/49.5 |
| R211 | 7030003370 | S.RES ERJ3GEYJ 271 V (270) | B | 45.2/50.8 |
| R213 | 7030000220 | S.RES MCR10EZHJ 47 (470) | B | 38.1/55.9 |
| R214 | 7030003460 | S.RES ERJ3GEYJ 152 V (1.5 k) | B | 51.6/60 |
| R215 | 7030003460 | S.RES ERJ3GEYJ 152 V (1.5 k) | B | 52.4/58 |
| R216 | 7030003680 | S.RES ERJ3GEYJ 104 V (100 k) | B | 17.3/66.4 |
| R501 | 7030003680 | S.RES ERJ3GEYJ 104 V (100 k) | B | 14.5/21.2 |
| R502 | 7030003560 | S.RES ERJ3GEYJ 103 V (10 k) | B | 25.7/25.3 |
| R503 | 7030003560 | S.RES ERJ3GEYJ 103 V (10 k) | B | 24.4/25.3 |
| R504 | 7030003440 | S.RES ERJ3GEYJ 102 V (1 k) | B | 9.7/44.5 |
| R505 | 7030003440 | S.RES ERJ3GEYJ 102 V (1 k) | T | 9.3/42.5 |
| R506 | 7030003440 | S.RES ERJ3GEYJ 102 V (1 k) | T | 3.7/28.1 |
| R507 | 7030003440 | S.RES ERJ3GEYJ 102 V (1 k) | B | 4.4/28 |
| R508 | 7030003440 | S.RES ERJ3GEYJ 102 V (1 k) | T | 12.9/30.8 |
| R509 | 7030003360 | S.RES ERJ3GEYJ 221 V (220) | T | 31.1/34.8 |
| R510 | 7030003360 | S.RES ERJ3GEYJ 221 V (220) | T | 32.2/21.9 |
| R535 | 7030003360 | S.RES ERJ3GEYJ 221 V (220) | T | 26.4/21.9 |
| R536 | 7030003360 | S.RES ERJ3GEYJ 221 V (220) | T | 25.7/19 |
| R537 | 7030003360 | S.RES ERJ3GEYJ 221 V (220) | T | 23.6/21.9 |
| R538 | 7030003360 | S.RES ERJ3GEYJ 221 V (220) | T | 24.3/19 |
| R539 | 7030003360 | S.RES ERJ3GEYJ 221 V (220) | T | 25/21.8 |
| R540 | 7030003360 | S.RES ERJ3GEYJ 221 V (220) | T | 30.1/19 |
| R541 | 7030003360 | S.RES ERJ3GEYJ 221 V (220) | T | 29.4/21.9 |
| R542 | 7030003360 | S.RES ERJ3GEYJ 221 V (220) | T | 28.7/19 |
| R543 | 7030003360 | S.RES ERJ3GEYJ 221 V (220) | T | 27.9/21.9 |
| R544 | 7030003360 | S.RES ERJ3GEYJ 221 V (220) | T | 27.2/19 |
| R545 | 7030003360 | S.RES ERJ3GEYJ 221 V (220) | T | 30.8/21.9 |
| R546 | 7030003360 | S.RES ERJ3GEYJ 221 V (220) | T | 31.5/19 |
| R547 | 7030003360 | S.RES ERJ3GEYJ 221 V (220) | T | 18/21.9 |
| R548 | 7030003360 | S.RES ERJ3GEYJ 221 V (220) | T | 17.3/19.1 |
| R549 | 7030003360 | S.RES ERJ3GEYJ 221 V (220) | T | 15.2/21.9 |
| R550 | 7030003360 | S.RES ERJ3GEYJ 221 V (220) | T | 16.6/21.9 |
| R551 | 7030003360 | S.RES ERJ3GEYJ 221 V (220) | T | 15.9/19.1 |
| R552 | 7030003360 | S.RES ERJ3GEYJ 221 V (220) | T | 20.1/19.2 |
| R553 | 7030003360 | S.RES ERJ3GEYJ 221 V (220) | T | 19.4/21.9 |
| R554 | 7030003360 | S.RES ERJ3GEYJ 221 V (220) | T | 18.7/19.1 |
| R555 | 7030003360 | S.RES ERJ3GEYJ 221 V (220) | T | 20.9/21.9 |
| R556 | 7030003360 | S.RES ERJ3GEYJ 221 V (220) | T | 21.6/19.2 |
| R557 | 7030003360 | S.RES ERJ3GEYJ 221 V (220) | T | 22.3/21.9 |
| R558 | 7030003360 | S.RES ERJ3GEYJ 221 V (220) | T | 23.5/34.2 |
| R600 | 7030000010 | S.RES MCR10EZHJ JPW (000) | B | 30.9/33.9 |
| R604 | 7030003560 | S.RES ERJ3GEYJ 103 V (10 k) | B | 145.1/17.1 |
| R605 | 7030003560 | S.RES ERJ3GEYJ 103 V (10 k) | B | 129.1/17.1 |
| R701 | 7030000380 | S.RES MCR10EZHJ 1 k | T | 53.2/20.4 |
| R702 | 7030000290 | S.RES MCR10EZHJ 180 (181) | T | 51.6/15.9 |
| R703 | 7030000220 | S.RES MCR10EZHJ 47 (470) | T | 51.6/13.8 |
| R704 | 7030003360 | S.RES ERJ3GEYJ 221 V (220) | T | 52.9/31.9 |
| R705 | 7030003350 | S.RES ERJ3GEYJ 181 V (180) | B | 49.4/9 |
| R706 | 7030003370 | S.RES ERJ3GEYJ 271 V (270) | B | 42.4/10.1 |
| R707 | 7030003560 | S.RES ERJ3GEYJ 103 V (10 k) | T | 51.3/12.2 |
| R708 | 7030000200 | S.RES MCR10EZHJ 33 (330) | T | 43.8/25.6 |
| R709 | 7030003240 | S.RES ERJ3GEYJ 220 V (22) | T | 46.5/19.8 |
| R710 | 7030003370 | S.RES ERJ3GEYJ 271 V (270) | B | 45.6/19.4 |
| R711 | 7030003370 | S.RES ERJ3GEYJ 271 V (270) | B | 45.6/21 |
| R713 | 7030000220 | S.RES MCR10EZHJ 47 (470) | B | 38.8/27.4 |
| R714 | 7030003460 | S.RES ERJ3GEYJ 152 V (1.5 k) | T | 53.5/29.2 |
| R715 | 7030003460 | S.RES ERJ3GEYJ 152 V (1.5 k) | T | 51.6/30 |
| R716 | 7030003680 | S.RES ERJ3GEYJ 104 V (100 k) | B | 14.5/15.5 |

## [DIGISEL UNIT]

| REF NO. | ORDER NO. | DESCRIPTION | M. | H/V LOCATION |
|---|---|---|---|---|
| C1 | 4030011600 | S.CER C1608 JB 1E 104K-T | B | 15.2/55.4 |
| C2 | 4030011600 | S.CER C1608 JB 1E 104K-T | T | 7.9/31.8 |
| C4 | 4030011600 | S.CER C1608 JB 1E 104K-T | T | 31.8/50.7 |
| C5 | 4030011600 | S.CER C1608 JB 1E 104K-T | T | 16/51.6 |
| C21 | 4030006880 | S.CER C1608 JB 1H 472K-T | B | 30.4/45.9 |
| C35 | 4030006880 | S.CER C1608 JB 1H 472K-T | T | 32.1/65.3 |
| C51 | 4030006880 | S.CER C1608 JB 1H 472K-T | B | 64.8/57.2 |
| C52 | 4030006880 | S.CER C1608 JB 1H 472K-T | T | 57.6/45.8 |
| C53 | 4030006880 | S.CER C1608 JB 1H 472K-T | T | 51.5/59.2 |
| C54 | 4030006880 | S.CER C1608 JB 1H 472K-T | T | 87.3/72.3 |
| C55 | 4030006880 | S.CER C1608 JB 1H 472K-T | B | 67.1/63.5 |
| C56 | 4030006880 | S.CER C1608 JB 1H 472K-T | T | 66.5/54.9 |
| C57 | 4030006880 | S.CER C1608 JB 1H 472K-T | B | 66.2/45.6 |
| C58 | 4030006880 | S.CER C1608 JB 1H 472K-T | T | 114.3/50.4 |
| C59 | 4030006880 | S.CER C1608 JB 1H 472K-T | T | 90.4/51.4 |
| C60 | 4030006880 | S.CER C1608 JB 1H 472K-T | T | 90.4/54.4 |
| C61 | 4030006880 | S.CER C1608 JB 1H 472K-T | T | 114.3/53.7 |
| C62 | 4030006880 | S.CER C1608 JB 1H 472K-T | T | 138.2/51.1 |
| C63 | 4030006880 | S.CER C1608 JB 1H 472K-T | T | 138.2/54.4 |
| C64 | 4030006880 | S.CER C1608 JB 1H 472K-T | T | 162.1/50.8 |
| C65 | 4030006880 | S.CER C1608 JB 1H 472K-T | T | 162.1/53.9 |
| C66 | 4030006880 | S.CER C1608 JB 1H 472K-T | B | 182.5/47.7 |
| C67 | 4030006880 | S.CER C1608 JB 1H 472K-T | T | 114.3/57.2 |
| C68 | 4030006880 | S.CER C1608 JB 1H 472K-T | T | 88.3/63 |
| C69 | 4030006880 | S.CER C1608 JB 1H 472K-T | B | 183.7/64.8 |
| C70 | 4030006880 | S.CER C1608 JB 1H 472K-T | T | 162.1/60.2 |
| C71 | 4030006880 | S.CER C1608 JB 1H 472K-T | T | 162.1/57.3 |
| C72 | 4030006880 | S.CER C1608 JB 1H 472K-T | T | 138.2/59.5 |
| C73 | 4030006880 | S.CER C1608 JB 1H 472K-T | T | 135.8/63 |
| C74 | 4030006880 | S.CER C1608 JB 1H 472K-T | T | 114.3/60.4 |
| C75 | 4030006880 | S.CER C1608 JB 1H 472K-T | T | 90.5/59.6 |
| C101 | 4030011340 | S.CER C1608 CH 1H 471J-T | T | 68.2/68.4 |
| C102 | 4030011280 | S.CER C1608 CH 1H 271J-T | T | 59.5/69.2 |
| C103 | 4030011280 | S.CER C1608 CH 1H 271J-T | T | 60.5/56.7 |
| C104 | 4030007130 | S.CER C1608 CH 1H 101J-T | T | 57.7/52.7 |
| C105 | 4030006940 | S.CER C1608 CH 1H 030C-T | B | 65.7/51.9 |
| C106 | 4030007150 | S.CER C1608 CH 1H 151J-T | B | 56.4/70.2 |
| C107 | 4030007150 | S.CER C1608 CH 1H 151J-T | B | 60.3/70.6 |
| C108 | 4030007150 | S.CER C1608 CH 1H 151J-T | B | 62.4/70.6 |
| C109 | 4030007150 | S.CER C1608 CH 1H 151J-T | B | 56.4/68.8 |
| C110 | 4030009520 | S.CER C1608 CH 1H 020B-T | T | 77.2/69.1 |
| C111 | 4030009550 | S.CER C1608 CH 1H 2R5B-T | T | 77.2/67.8 |
| C113 | 4030007000 | S.CER C1608 CH 1H 090D-T | T | 73.7/58.9 |
| C114 | 4030007040 | S.CER C1608 CH 1H 180J-T | T | 71.7/59.5 |
| C115 | 4030007040 | S.CER C1608 CH 1H 180J-T | T | 70.4/59.5 |
| C116 | 4030007040 | S.CER C1608 CH 1H 180J-T | T | 69.1/59.5 |
| C117 | 4030007070 | S.CER C1608 CH 1H 330J-T | T | 77.2/70.4 |
| C118 | 4030007090 | S.CER C1608 CH 1H 470J-T | B | 76.7/59.8 |
| C119 | 4030007040 | S.CER C1608 CH 1H 180J-T | B | 66.1/48.1 |
| C120 | 4030007040 | S.CER C1608 CH 1H 180J-T | B | 66.1/49.8 |
| C121 | 4030007040 | S.CER C1608 CH 1H 180J-T | B | 74.4/59.7 |
| C122 | 4030007000 | S.CER C1608 CH 1H 090D-T | B | 74.3/70.3 |
| C124 | 4030009520 | S.CER C1608 CH 1H 020B-T | B | 77.4/68.9 |
| C125 | 4030009550 | S.CER C1608 CH 1H 2R5B-T | B | 76.1/68.9 |
| C126 | 4030008360 | S.CER C1608 UJ 1H 101J-T | B | 124.5/63.3 |
| C128 | 4030009500 | S.CER C1608 CH 1H 0R5B-T | B | 107.2/55.4 |
| C129 | 4030009510 | S.CER C1608 CH 1H 010B-T | B | 83.2/55.8 |
| C130 | 4030009520 | S.CER C1608 CH 1H 020B-T | B | 97.6/55.5 |
| C131 | 4030009910 | S.CER C1608 CH 1H 040B-T | B | 121.5/55.6 |
| C132 | 4030006990 | S.CER C1608 CH 1H 080D-T | B | 131/55.6 |
| C133 | 4030007040 | S.CER C1608 CH 1H 180J-T | B | 145.4/55.7 |
| C134 | 4030008750 | S.CER C1608 CH 1H 360J-T | B | 154.9/55.7 |
| C135 | 4030007110 | S.CER C1608 CH 1H 680J-T | B | 169.3/55.7 |
| C136 | 4030007140 | S.CER C1608 CH 1H 121J-T | B | 178.8/55.7 |
| C137 | 4030007140 | S.CER C1608 CH 1H 121J-T | B | 107.4/63.8 |
| C138 | 4030007130 | S.CER C1608 CH 1H 101J-T | B | 107.4/62.5 |
| C139 | 4030007160 | S.CER C1608 CH 1H 181J-T | B | 83.6/62.7 |
| C140 | 4030007160 | S.CER C1608 CH 1H 181J-T | B | 83.6/64.5 |
| C141 | 4030008330 | S.CER C1608 UJ 1H 560J-T | B | 177.2/63.2 |
| C142 | 4030008330 | S.CER C1608 UJ 1H 560J-T | B | 169.3/63.2 |
| C143 | 4030007090 | S.CER C1608 CH 1H 470J-T | B | 155.2/63.2 |
| C201 | 4030011600 | S.CER C1608 JB 1E 104K-T | B | 49.1/57.2 |
| C202 | 4030006900 | S.CER C1608 JB 1H 103K-T | T | 57.7/55.4 |
| C203 | 4030011600 | S.CER C1608 JB 1E 104K-T | B | 50.4/46.3 |
| C204 | 4030011600 | S.CER C1608 JB 1E 104K-T | B | 53.2/45.4 |
| C205 | 4030011600 | S.CER C1608 JB 1E 104K-T | B | 43.4/59.6 |
| C206 | 4030011600 | S.CER C1608 JB 1E 104K-T | B | 44.4/54.6 |
| C207 | 4030006880 | S.CER C1608 JB 1H 472K-T | B | 41.1/59.6 |
| C208 | 4030007010 | S.CER C1608 CH 1H 100D-T | T | 45/56.1 |
| C209 | 4030006880 | S.CER C1608 JB 1H 472K-T | B | 38.1/59.6 |
| C210 | 4030006900 | S.CER C1608 JB 1H 103K-T | B | 45.2/52.1 |
| C211 | 4030009000 | S.CER C2012 JB 1C 224K-T | B | 45.6/47.9 |
| C212 | 4030006880 | S.CER C1608 JB 1H 472K-T | B | 52.4/62 |
| C213 | 4030006880 | S.CER C1608 JB 1H 472K-T | T | 54.5/45.1 |
| C214 | 4030006880 | S.CER C1608 JB 1H 472K-T | B | 48.5/46.3 |
| C215 | 4030006880 | S.CER C1608 JB 1H 472K-T | T | 43.8/68.4 |
| C501 | 4030011600 | S.CER C1608 JB 1E 104K-T | B | 27/25.3 |
| C504 | 4030011600 | S.CER C1608 JB 1E 104K-T | T | 30.8/33.4 |
| C505 | 4030011600 | S.CER C1608 JB 1E 104K-T | T | 19.5/33.7 |
| C521 | 4030006880 | S.CER C1608 JB 1H 472K-T | B | 28/35 |
| C535 | 4030006880 | S.CER C1608 JB 1H 472K-T | T | 33.5/21.9 |
| C551 | 4030006880 | S.CER C1608 JB 1H 472K-T | B | 63.6/10.9 |
| C552 | 4030006880 | S.CER C1608 JB 1H 472K-T | T | 61.5/22.9 |
| C553 | 4030006880 | S.CER C1608 JB 1H 472K-T | B | 58/10.2 |
| C554 | 4030006880 | S.CER C1608 JB 1H 472K-T | T | 90.3/12.9 |
| C555 | 4030006880 | S.CER C1608 JB 1H 472K-T | B | 68.8/12.6 |
| C556 | 4030006880 | S.CER C1608 JB 1H 472K-T | B | 69.8/27.9 |
| C557 | 4030006880 | S.CER C1608 JB 1H 472K-T | B | 67.4/32.9 |
| C558 | 4030006880 | S.CER C1608 JB 1H 472K-T | T | 114.3/25.9 |
| C559 | 4030006880 | S.CER C1608 JB 1H 472K-T | T | 90.4/27.1 |
| C560 | 4030006880 | S.CER C1608 JB 1H 472K-T | T | 90.4/30.5 |
| C561 | 4030006880 | S.CER C1608 JB 1H 472K-T | T | 114.3/29.9 |
| C562 | 4030006880 | S.CER C1608 JB 1H 472K-T | T | 138.2/27.1 |
| C563 | 4030006880 | S.CER C1608 JB 1H 472K-T | T | 138.2/30.5 |

M.=Mounted side (T: Mounted on the Top side, B: Mounted on the Bottom side)
S.=Surface mount

## [DIGISEL UNIT]

| REF NO. | ORDER NO. | DESCRIPTION | M. | H/V LOCATION |
|---|---|---|---|---|
| C564 | 4030006880 | S.CER C1608 JB 1H 472K-T | T | 162.1/27.2 |
| C565 | 4030006880 | S.CER C1608 JB 1H 472K-T | T | 162.1/30.4 |
| C566 | 4030006880 | S.CER C1608 JB 1H 472K-T | B | 180.9/33.5 |
| C567 | 4030006880 | S.CER C1608 JB 1H 472K-T | T | 109.8/17.8 |
| C568 | 4030006880 | S.CER C1608 JB 1H 472K-T | T | 90.4/19.5 |
| C569 | 4030006880 | S.CER C1608 JB 1H 472K-T | B | 181.8/17.1 |
| C570 | 4030006880 | S.CER C1608 JB 1H 472K-T | T | 162.1/22.4 |
| C571 | 4030006880 | S.CER C1608 JB 1H 472K-T | T | 158.5/17.6 |
| C572 | 4030006880 | S.CER C1608 JB 1H 472K-T | T | 138.2/23.1 |
| C573 | 4030006880 | S.CER C1608 JB 1H 472K-T | T | 134.8/17.5 |
| C574 | 4030006880 | S.CER C1608 JB 1H 472K-T | T | 114.3/20.6 |
| C575 | 4030006880 | S.CER C1608 JB 1H 472K-T | T | 90.4/23.3 |
| C601 | 4030011340 | S.CER C1608 CH 1H 471J-T | B | 66/22.5 |
| C602 | 4030011280 | S.CER C1608 CH 1H 271J-T | B | 65.2/26.7 |
| C603 | 4030011280 | S.CER C1608 CH 1H 271J-T | T | 59.1/35.6 |
| C604 | 4030007130 | S.CER C1608 CH 1H 101J-T | T | 57.7/33 |
| C605 | 4030006940 | S.CER C1608 CH 1H 030C-T | T | 57.2/29 |
| C606 | 4030007150 | S.CER C1608 CH 1H 151J-T | T | 55.6/30.7 |
| C607 | 4030007150 | S.CER C1608 CH 1H 151J-T | T | 57.2/25.4 |
| C608 | 4030007150 | S.CER C1608 CH 1H 151J-T | T | 57.2/23.8 |
| C609 | 4030007150 | S.CER C1608 CH 1H 151J-T | T | 56.8/22.5 |
| C610 | 4030009520 | S.CER C1608 CH 1H 020B-T | B | 77.3/11.3 |
| C611 | 4030009550 | S.CER C1608 CH 1H 2R5B-T | B | 76/11.3 |
| C613 | 4030007000 | S.CER C1608 CH 1H 090D-T | B | 73.8/12.5 |
| C614 | 4030007040 | S.CER C1608 CH 1H 180J-T | B | 73.7/21.1 |
| C615 | 4030007040 | S.CER C1608 CH 1H 180J-T | B | 73.9/28.2 |
| C616 | 4030007040 | S.CER C1608 CH 1H 180J-T | B | 73.9/29.7 |
| C617 | 4030007070 | S.CER C1608 CH 1H 330J-T | B | 76/19.4 |
| C618 | 4030007090 | S.CER C1608 CH 1H 470J-T | T | 75.5/20.7 |
| C619 | 4030007040 | S.CER C1608 CH 1H 180J-T | T | 65.6/35.3 |
| C620 | 4030007040 | S.CER C1608 CH 1H 180J-T | T | 65.7/36.7 |
| C621 | 4030007040 | S.CER C1608 CH 1H 180J-T | T | 73.7/28.3 |
| C622 | 4030007000 | S.CER C1608 CH 1H 090D-T | T | 73.2/20.2 |
| C624 | 4030009520 | S.CER C1608 CH 1H 020B-T | T | 76.9/10.6 |
| C625 | 4030009550 | S.CER C1608 CH 1H 2R5B-T | T | 76.9/12 |
| C626 | 4030008360 | S.CER C1608 UJ 1H 101J-T | B | 124.5/17.4 |
| C628 | 4030009500 | S.CER C1608 CH 1H 0R5B-T | B | 107.4/25.3 |
| C629 | 4030009510 | S.CER C1608 CH 1H 010B-T | B | 83.3/25.5 |
| C630 | 4030009520 | S.CER C1608 CH 1H 020B-T | B | 97.8/25.3 |
| C631 | 4030009910 | S.CER C1608 CH 1H 040B-T | B | 121.2/25.3 |
| C632 | 4030006990 | S.CER C1608 CH 1H 080D-T | B | 131.3/25.3 |
| C633 | 4030007040 | S.CER C1608 CH 1H 180J-T | B | 145.2/25.3 |
| C634 | 4030008750 | S.CER C1608 CH 1H 360J-T | B | 155.2/25.3 |
| C635 | 4030007110 | S.CER C1608 CH 1H 680J-T | B | 169/25.3 |
| C636 | 4030007140 | S.CER C1608 CH 1H 121J-T | B | 179.1/25.3 |
| C637 | 4030007140 | S.CER C1608 CH 1H 121J-T | B | 107.4/18.3 |
| C638 | 4030007130 | S.CER C1608 CH 1H 101J-T | B | 107.4/16.5 |
| C639 | 4030007160 | S.CER C1608 CH 1H 181J-T | B | 83.9/18.1 |
| C640 | 4030007160 | S.CER C1608 CH 1H 181J-T | B | 84.7/16.3 |
| C641 | 4030008330 | S.CER C1608 UJ 1H 560J-T | B | 177/17.9 |
| C642 | 4030008330 | S.CER C1608 UJ 1H 560J-T | B | 169/18 |
| C643 | 4030007090 | S.CER C1608 CH 1H 470J-T | B | 155.5/18 |
| C701 | 4030011600 | S.CER C1608 JB 1E 104K-T | T | 52.3/17.7 |
| C702 | 4030006900 | S.CER C1608 JB 1H 103K-T | T | 54.6/27.3 |
| C703 | 4030011600 | S.CER C1608 JB 1E 104K-T | B | 40.3/10.4 |
| C704 | 4030011600 | S.CER C1608 JB 1E 104K-T | B | 52.1/9.8 |
| C705 | 4030011600 | S.CER C1608 JB 1E 104K-T | B | 44/28.1 |
| C706 | 4030011600 | S.CER C1608 JB 1E 104K-T | T | 45.1/22.6 |
| C707 | 4030006880 | S.CER C1608 JB 1H 472K-T | B | 42.7/28.1 |
| C708 | 4030007010 | S.CER C1608 CH 1H 100D-T | T | 46.5/22.7 |
| C709 | 4030006880 | S.CER C1608 JB 1H 472K-T | B | 40.6/28.9 |
| C710 | 4030006900 | S.CER C1608 JB 1H 103K-T | B | 45.6/22.7 |
| C711 | 4030009000 | S.CER C2012 JB 1C 224K-T | B | 45.7/24.4 |
| C712 | 4030006880 | S.CER C1608 JB 1H 472K-T | T | 54.8/32.3 |
| C713 | 4030006880 | S.CER C1608 JB 1H 472K-T | B | 52.1/7.9 |
| C714 | 4030006880 | S.CER C1608 JB 1H 472K-T | B | 42.4/6.5 |
| C715 | 4030006880 | S.CER C1608 JB 1H 472K-T | T | 54.2/34.3 |
| RL2 | 6330001750 | RLY FTR-B4CA012Z | | |
| RL21 | 6330001750 | RLY FTR-B4CA012Z | | |
| RL51 | 6330001750 | RLY FTR-B4CA012Z | | |
| RL52 | 6330001750 | RLY FTR-B4CA012Z | | |
| RL53 | 6330001750 | RLY FTR-B4CA012Z | | |
| RL54 | 6330001750 | RLY FTR-B4CA012Z | | |
| RL55 | 6330001750 | RLY FTR-B4CA012Z | | |
| RL56 | 6330001750 | RLY FTR-B4CA012Z | | |
| RL57 | 6330001750 | RLY FTR-B4CA012Z | | |
| RL58 | 6330001750 | RLY FTR-B4CA012Z | | |
| RL59 | 6330001750 | RLY FTR-B4CA012Z | | |
| RL60 | 6330001750 | RLY FTR-B4CA012Z | | |
| RL61 | 6330001750 | RLY FTR-B4CA012Z | | |
| RL62 | 6330001750 | RLY FTR-B4CA012Z | | |
| RL63 | 6330001750 | RLY FTR-B4CA012Z | | |
| RL64 | 6330001750 | RLY FTR-B4CA012Z | | |
| RL65 | 6330001750 | RLY FTR-B4CA012Z | | |
| RL66 | 6330001750 | RLY FTR-B4CA012Z | | |
| RL67 | 6330001750 | RLY FTR-B4CA012Z | | |
| RL69 | 6330001750 | RLY FTR-B4CA012Z | | |
| RL70 | 6330001750 | RLY FTR-B4CA012Z | | |
| RL71 | 6330001750 | RLY FTR-B4CA012Z | | |
| RL72 | 6330001750 | RLY FTR-B4CA012Z | | |
| RL73 | 6330001750 | RLY FTR-B4CA012Z | | |
| RL74 | 6330001750 | RLY FTR-B4CA012Z | | |
| RL75 | 6330001750 | RLY FTR-B4CA012Z | | |
| RL76 | 6330001750 | RLY FTR-B4CA012Z | | |
| RL201 | 6330001750 | RLY FTR-B4CA012Z | | |
| RL502 | 6330001750 | RLY FTR-B4CA012Z | | |
| RL521 | 6330001750 | RLY FTR-B4CA012Z | | |
| RL551 | 6330001750 | RLY FTR-B4CA012Z | | |
| RL552 | 6330001750 | RLY FTR-B4CA012Z | | |
| RL553 | 6330001750 | RLY FTR-B4CA012Z | | |
| RL554 | 6330001750 | RLY FTR-B4CA012Z | | |
| RL555 | 6330001750 | RLY FTR-B4CA012Z | | |

## [DIGISEL UNIT]

| REF NO. | ORDER NO. | DESCRIPTION | M. | H/V LOCATION |
|---|---|---|---|---|
| RL556 | 6330001750 | RLY FTR-B4CA012Z | | |
| RL557 | 6330001750 | RLY FTR-B4CA012Z | | |
| RL558 | 6330001750 | RLY FTR-B4CA012Z | | |
| RL559 | 6330001750 | RLY FTR-B4CA012Z | | |
| RL560 | 6330001750 | RLY FTR-B4CA012Z | | |
| RL561 | 6330001750 | RLY FTR-B4CA012Z | | |
| RL562 | 6330001750 | RLY FTR-B4CA012Z | | |
| RL563 | 6330001750 | RLY FTR-B4CA012Z | | |
| RL564 | 6330001750 | RLY FTR-B4CA012Z | | |
| RL565 | 6330001750 | RLY FTR-B4CA012Z | | |
| RL566 | 6330001750 | RLY FTR-B4CA012Z | | |
| RL567 | 6330001750 | RLY FTR-B4CA012Z | | |
| RL569 | 6330001750 | RLY FTR-B4CA012Z | | |
| RL570 | 6330001750 | RLY FTR-B4CA012Z | | |
| RL571 | 6330001750 | RLY FTR-B4CA012Z | | |
| RL572 | 6330001750 | RLY FTR-B4CA012Z | | |
| RL573 | 6330001750 | RLY FTR-B4CA012Z | | |
| RL574 | 6330001750 | RLY FTR-B4CA012Z | | |
| RL575 | 6330001750 | RLY FTR-B4CA012Z | | |
| RL576 | 6330001750 | RLY FTR-B4CA012Z | | |
| RL701 | 6330001750 | RLY FTR-B4CA012Z | | |
| J1 | 6510007020 | CNR TMP-J01X-V6 | | |
| J2 | 6510007020 | CNR TMP-J01X-V6 | | |
| J10 | 6510020081 | S.CNR 52808-2071 (2090) | T | 4.5/40.5 |
| J501 | 6510007020 | CNR TMP-J01X-V6 | | |
| J502 | 6510007020 | CNR TMP-J01X-V6 | | |
| Q300 | 1520000561 | S.TR 2SB1123 T-TD-E | T | 205.7/10.5 |

M.=Mounted side (T: Mounted on the Top side, B: Mounted on the Bottom side)
S.=Surface mount

## [NETWORK UNIT]

| REF NO. | ORDER NO. | DESCRIPTION | | M. | H/V LOCATION |
|---|---|---|---|---|---|
| Q301 | 1590000680 | S.TR | DTC114EUA T106 | T | 201.4/9.1 |
| | | | | | |
| L50 | 6110003950 | COL | LA-598 | | |
| L60 | 6110003910 | COL | LA-593 | | |
| L70 | 6110003050 | COL | LA-492 | | |
| L80 | 6110003050 | COL | LA-492 | | |
| L90 | 6110003060 | COL | LA-493 | | |
| L100 | 6110003070 | COL | LA-494 | | |
| L110 | 6110003920 | COL | LA-594 | | |
| L120 | 6140004460 | COL | LR-504 | | |
| L130 | 6140004470 | COL | LR-505 | | |
| L131 | 6140004470 | COL | LR-505 | | |
| L300 | 6180000990 | COL | LAL 04NA 101K | | |
| | | | | | |
| R300 | 7030000420 | S.RES | MCR10EZHJ 2.2 k | T | 202.8/6.9 |
| R301 | 7030000420 | S.RES | MCR10EZHJ 2.2 k | T | 201.5/11.3 |
| R302 | 7030000420 | S.RES | MCR10EZHJ 2.2 k | T | 206.2/6.9 |
| R303 | 7030009800 | S.RES | ERJ12YJ121U (120) | T | 209.7/5 |
| | | | | | |
| C1 | 4620000150 | VAR | KB-150-07 150P | | |
| C2 | 4620000150 | VAR | KB-150-07 150P | | |
| C3 | 4010007580 | CER | HT20SJ SL 201J 3KV | | |
| C4 | 4010007580 | CER | HT20SJ SL 201J 3KV | | |
| C5 | 4010007580 | CER | HT20SJ SL 201J 3KV | | |
| C6 | 4010007580 | CER | HT20SJ SL 201J 3KV | | |
| C7 | 4010007580 | CER | HT20SJ SL 201J 3KV | | |
| C8 | 4010007580 | CER | HT20SJ SL 201J 3KV | | |
| C9 | 4010007580 | CER | HT20SJ SL 201J 3KV | | |
| C10 | 4010007580 | CER | HT20SJ SL 201J 3KV | | |
| C20 | 4010007570 | CER | HT15SJ SL 151J 3KV | | |
| C21 | 4010007570 | CER | HT15SJ SL 151J 3KV | | |
| C22 | 4010007570 | CER | HT15SJ SL 151J 3KV | | |
| C23 | 4010007570 | CER | HT15SJ SL 151J 3KV | | |
| C24 | 4010007570 | CER | HT15SJ SL 151J 3KV | | |
| C25 | 4010007570 | CER | HT15SJ SL 151J 3KV | | |
| C26 | 4010007570 | CER | HT15SJ SL 151J 3KV | | |
| C27 | 4010007570 | CER | HT15SJ SL 151J 3KV | | |
| C30 | 4010007550 | CER | HT11SJ SL 820J 3KV | | |
| C31 | 4010007550 | CER | HT11SJ SL 820J 3KV | | |
| C32 | 4010007550 | CER | HT11SJ SL 820J 3KV | | |
| C33 | 4010007550 | CER | HT11SJ SL 820J 3KV | | |
| C34 | 4010007550 | CER | HT11SJ SL 820J 3KV | | |
| C35 | 4010007550 | CER | HT11SJ SL 820J 3KV | | |
| C36 | 4010007550 | CER | HT11SJ SL 820J 3KV | | |
| C37 | 4010007550 | CER | HT11SJ SL 820J 3KV | | |
| C40 | 4010008550 | CER | DEA1X3F390JC3B | | |
| C41 | 4010008550 | CER | DEA1X3F390JC3B | | |
| C42 | 4010008550 | CER | DEA1X3F390JC3B | | |
| C43 | 4010008550 | CER | DEA1X3F390JC3B | | |
| C44 | 4010008550 | CER | DEA1X3F390JC3B | | |
| C45 | 4010008550 | CER | DEA1X3F390JC3B | | |
| C46 | 4010008550 | CER | DEA1X3F390JC3B | | |
| C47 | 4010008550 | CER | DEA1X3F390JC3B | | |
| C50 | 4030006880 | S.CER | C1608 JB 1H 472K-T | T | 140.7/12 |
| C60 | 4030006880 | S.CER | C1608 JB 1H 472K-T | T | 154.1/12 |
| C70 | 4030006880 | S.CER | C1608 JB 1H 472K-T | T | 167.5/16.1 |
| C80 | 4030006880 | S.CER | C1608 JB 1H 472K-T | T | 181.9/21.5 |
| C90 | 4030006880 | S.CER | C1608 JB 1H 472K-T | T | 195.3/21.3 |
| C100 | 4030006880 | S.CER | C1608 JB 1H 472K-T | T | 204.4/20.7 |
| C110 | 4030006880 | S.CER | C1608 JB 1H 472K-T | T | 205.8/20.7 |
| C120 | 4030006880 | S.CER | C1608 JB 1H 472K-T | T | 207.2/20.6 |
| C202 | 4030006880 | S.CER | C1608 JB 1H 472K-T | T | 187.4/13.2 |
| C203 | 4030006880 | S.CER | C1608 JB 1H 472K-T | T | 188.4/15.7 |
| C204 | 4030006880 | S.CER | C1608 JB 1H 472K-T | T | 189.4/13.2 |
| C205 | 4030006880 | S.CER | C1608 JB 1H 472K-T | T | 190.4/15.7 |
| C206 | 4030006880 | S.CER | C1608 JB 1H 472K-T | T | 191.4/13.2 |
| C207 | 4030006880 | S.CER | C1608 JB 1H 472K-T | T | 192.4/15.7 |
| C208 | 4030006880 | S.CER | C1608 JB 1H 472K-T | T | 193.4/13.2 |
| C209 | 4030006880 | S.CER | C1608 JB 1H 472K-T | T | 194.4/15.7 |
| C252 | 4030006880 | S.CER | C1608 JB 1H 472K-T | T | 175.4/13.2 |
| C253 | 4030006880 | S.CER | C1608 JB 1H 472K-T | T | 176.4/15.7 |
| C254 | 4030006880 | S.CER | C1608 JB 1H 472K-T | T | 177.4/13.2 |
| C255 | 4030006880 | S.CER | C1608 JB 1H 472K-T | T | 178.4/15.7 |
| C256 | 4030006880 | S.CER | C1608 JB 1H 472K-T | T | 179.4/13.2 |
| C257 | 4030006880 | S.CER | C1608 JB 1H 472K-T | T | 180.4/15.7 |
| C258 | 4030006880 | S.CER | C1608 JB 1H 472K-T | T | 181.4/13.2 |
| C259 | 4030006880 | S.CER | C1608 JB 1H 472K-T | T | 182.4/15.7 |
| C300 | 4030006880 | S.CER | C1608 JB 1H 472K-T | T | 184.4/13.2 |
| C301 | 4030006880 | S.CER | C1608 JB 1H 472K-T | T | 210.5/10.1 |
| | | | | | |
| RL10 | 6330001200 | RLY | VS-12MBU-UC | | |
| RL11 | 6330001200 | RLY | VS-12MBU-UC | | |
| RL20 | 6330001200 | RLY | VS-12MBU-UC | | |
| RL21 | 6330001200 | RLY | VS-12MBU-UC | | |
| RL30 | 6330001200 | RLY | VS-12MBU-UC | | |
| RL31 | 6330001200 | RLY | VS-12MBU-UC | | |
| RL40 | 6330001200 | RLY | VS-12MBU-UC | | |
| RL41 | 6330001200 | RLY | VS-12MBU-UC | | |
| RL50 | 6330001460 | RLY | FTR-F1CA012V | | |
| RL60 | 6330001200 | RLY | VS-12MBU-UC | | |
| RL70 | 6330001200 | RLY | VS-12MBU-UC | | |
| RL80 | 6330001200 | RLY | VS-12MBU-UC | | |
| RL90 | 6330001200 | RLY | VS-12MBU-UC | | |
| RL100 | 6330001200 | RLY | VS-12MBU-UC | | |
| RL110 | 6330001200 | RLY | VS-12MBU-UC | | |
| RL120 | 6330001200 | RLY | VS-12MBU-UC | | |
| | | | | | |
| J1 | 6510021561 | S.CNR | 52808-2470 (2490) | T | 184.9/7.4 |
| J2 | 6510017930 | CNR | 1771P145-20 | | |
| J3 | 6510017930 | CNR | 1771P145-20 | | |
| J4 | 6510003521 | CNR | S04B-EH-S (LF) (SN) | | |
| | | | | | |
| | | | | | |
| D402 | 1750000271 | S.DIO | 1SS301 (TE85L,F) | T | 11.8/24.3 |

## [FILTER UNIT]

| REF NO. | ORDER NO. | DESCRIPTION | | M. | H/V LOCATION |
|---|---|---|---|---|---|
| D452 | 1750000271 | S.DIO | 1SS301 (TE85L,F) | T | 32/20.5 |
| D502 | 1750000271 | S.DIO | 1SS301 (TE85L,F) | T | 54.8/30.3 |
| D552 | 1750000271 | S.DIO | 1SS301 (TE85L,F) | T | 155.6/29.1 |
| D602 | 1750000271 | S.DIO | 1SS301 (TE85L,F) | T | 130.1/20.3 |
| D652 | 1750000271 | S.DIO | 1SS301 (TE85L,F) | T | 93.8/33 |
| D702 | 1750000271 | S.DIO | 1SS301 (TE85L,F) | T | 69.6/20.3 |
| D752 | 1750000271 | S.DIO | 1SS301 (TE85L,F) | T | 113.1/33 |
| D802 | 1750000271 | S.DIO | 1SS301 (TE85L,F) | T | 173.6/25.9 |
| | | | | | |
| L401 | 6200005131 | S.COL | NLC453232T-101K-PF | T | 25.4/136.7 |
| L402 | 6140004310 | COL | LR-471 | | |
| L403 | 6140004300 | COL | LR-470 | | |
| L404 | 6140004300 | COL | LR-470 | | |
| L405 | 6200005131 | S.COL | NLC453232T-101K-PF | T | 7.3/24.6 |
| L451 | 6200005131 | S.COL | NLC453232T-101K-PF | T | 4.4/143.9 |
| L452 | 6140004270 | COL | LR-467 | | |
| L453 | 6140004290 | COL | LR-469 | | |
| L454 | 6140004290 | COL | LR-469 | | |
| L455 | 6200005131 | S.COL | NLC453232T-101K-PF | T | 28.4/29.9 |
| L501 | 6200005131 | S.COL | NLC453232T-101K-PF | T | 46.3/133.8 |
| L502 | 6140004280 | COL | LR-468 | | |
| L503 | 6140004270 | COL | LR-467 | | |
| L504 | 6140004270 | COL | LR-467 | | |
| L505 | 6200005131 | S.COL | NLC453232T-101K-PF | T | 50.2/29.6 |
| L551 | 6200005131 | S.COL | NLC453232T-101K-PF | T | 150.7/133.8 |
| L552 | 6140004260 | COL | LR-466 | | |
| L553 | 6140004280 | COL | LR-468 | | |
| L554 | 6140004280 | COL | LR-468 | | |
| L555 | 6200005131 | S.COL | NLC453232T-101K-PF | T | 151/29.7 |
| L601 | 6200005131 | S.COL | NLC453232T-101K-PF | T | 129.9/133.8 |
| L602 | 6140004250 | COL | LR-465 | | |
| L603 | 6140004240 | COL | LR-464 | | |
| L604 | 6140004240 | COL | LR-464 | | |
| L605 | 6200005131 | S.COL | NLC453232T-101K-PF | T | 130.1/14.2 |
| L651 | 6200005131 | S.COL | NLC453232T-101K-PF | T | 88.2/133.8 |
| L652 | 6140004200 | COL | LR-463 | | |
| L653 | 6140004170 | COL | LR-462 | | |
| L654 | 6140004170 | COL | LR-462 | | |
| L655 | 6200005131 | S.COL | NLC453232T-101K-PF | T | 92.3/29.8 |
| L701 | 6200005131 | S.COL | NLC453232T-101K-PF | T | 67.2/133.8 |
| L702 | 6140004130 | COL | LR-461 | | |
| L703 | 6140004070 | COL | LR-460 | | |
| L704 | 6140004070 | COL | LR-460 | | |
| L705 | 6200005131 | S.COL | NLC453232T-101K-PF | T | 69.6/14.1 |
| L751 | 6200005131 | S.COL | NLC453232T-101K-PF | T | 109.1/133.8 |
| L752 | 6110003900 | COL | LA-592 | | |
| L753 | 6110003890 | COL | LA-591 | | |
| L754 | 6110003890 | COL | LA-591 | | |
| L755 | 6200005131 | S.COL | NLC453232T-101K-PF | T | 111.4/29.8 |
| L801 | 6200001831 | S.COL | NLV32T-100J | T | 165.9/163.4 |
| L802 | 6110003880 | COL | LA-590 | | |
| L803 | 6110003870 | COL | LA-589 | | |
| L804 | 6110003870 | COL | LA-589 | | |
| L805 | 6200001831 | S.COL | NLV32T-100J | T | 173.9/22.8 |
| | | | | | |
| C401 | 4030006880 | S.CER | C1608 JB 1H 472K-T | T | 25.4/130.4 |
| C402 | 4010008200 | CER | HM11TJ SL 331J 500V | | |
| C403 | 4010008200 | CER | HM11TJ SL 331J 500V | | |
| C404 | 4010008300 | CER | HM11TJ SL 391J 500V | | |
| C405 | 4010008300 | CER | HM11TJ SL 391J 500V | | |
| C406 | 4010008210 | CER | HM60TJ SL 560J 500V | | |
| C407 | 4010007590 | CER | HM15SJ SL 681J 500V | | |
| C408 | 4010007590 | CER | HM15SJ SL 681J 500V | | |
| C409 | 4010007590 | CER | HM15SJ SL 681J 500V | | |
| C410 | 4010005870 | CER | HM95SJ SL 221J 500V | | |
| C411 | 4010008280 | CER | HM95TJ SL 221J 500V | | |
| C412 | 4010008370 | CER | HM60TJ SL 150J 500V | | |
| C413 | 4010007590 | CER | HM15SJ SL 681J 500V | | |
| C414 | 4010007590 | CER | HM15SJ SL 681J 500V | | |
| C415 | 4010007590 | CER | HM15SJ SL 681J 500V | | |
| C416 | 4010008300 | CER | HM11TJ SL 391J 500V | | |
| C417 | 4010008230 | CER | HM60TJ SL 820J 500V | | |
| C418 | 4010007590 | CER | HM15SJ SL 681J 500V | | |
| C419 | 4010007590 | CER | HM15SJ SL 681J 500V | | |
| C420 | 4030006880 | S.CER | C1608 JB 1H 472K-T | T | 11.6/26.3 |
| C451 | 4030006880 | S.CER | C1608 JB 1H 472K-T | T | 26.6/127.9 |
| C452 | 4010008290 | CER | HM95TJ SL 271J 500V | | |
| C453 | 4010008280 | CER | HM95TJ SL 221J 500V | | |
| C454 | 4010008240 | CER | HM60TJ SL 101J 500V | | |
| C455 | 4010005810 | CER | HM74SJ SL 111J 500V | | |
| C456 | 4010007490 | CER | HM15SJ SL 561J 500V | | |
| C457 | 4010006410 | CER | HM13SJ SL 471J 500V | | |
| C458 | 4010008250 | CER | HM74TJ SL 121J 500V | | |
| C459 | 4010005810 | CER | HM74SJ SL 111J 500V | | |
| C461 | 4010007490 | CER | HM15SJ SL 561J 500V | | |
| C462 | 4010007490 | CER | HM15SJ SL 561J 500V | | |
| C463 | 4010008340 | CER | HM60TJ SL 270J 500V | | |
| C464 | 4010008320 | CER | HM60TJ SL 390J 500V | | |
| C465 | 4010007490 | CER | HM15SJ SL 561J 500V | | |
| C466 | 4010008220 | CER | HM60TJ SL 680J 500V | | |
| C467 | 4030006880 | S.CER | C1608 JB 1H 472K-T | T | 32.4/23.4 |
| C468 | 4010008230 | CER | HM60TJ SL 820J 500V | | |
| C501 | 4030006880 | S.CER | C1608 JB 1H 472K-T | T | 47.6/127.3 |
| C502 | 4010008280 | CER | HM95TJ SL 221J 500V | | |
| C503 | 4010008260 | CER | HM74TJ SL 151J 500V | | |
| C504 | 4010008280 | CER | HM95TJ SL 221J 500V | | |
| C506 | 4010008200 | CER | HM11TJ SL 331J 500V | | |
| C507 | 4010008280 | CER | HM95TJ SL 221J 500V | | |
| C508 | 4010008280 | CER | HM95TJ SL 221J 500V | | |
| C509 | 4010005810 | CER | HM74SJ SL 111J 500V | | |
| C511 | 4010008300 | CER | HM11TJ SL 391J 500V | | |
| C512 | 4010008300 | CER | HM11TJ SL 391J 500V | | |
| C513 | 4010008260 | CER | HM74TJ SL 151J 500V | | |
| C514 | 4010008320 | CER | HM60TJ SL 390J 500V | | |

M.=Mounted side (T: Mounted on the Top side, B: Mounted on the Bottom side)
S.=Surface mount

## [FILTER UNIT]

| REF NO. | ORDER NO. | DESCRIPTION | | M. | H/V LOCATION |
|---|---|---|---|---|---|
| C515 | 4010008280 | CER | HM95TJ SL 221J 500V | | |
| C516 | 4010008280 | CER | HM95TJ SL 221J 500V | | |
| C517 | 4030006880 | S.CER | C1608 JB 1H 472K-T | T | 54.7/28.4 |
| C518 | 4010008340 | CER | HM60TJ SL 270J 500V | | |
| C551 | 4030006880 | S.CER | C1608 JB 1H 472K-T | T | 149.9/122.5 |
| C552 | 4010005860 | CER | HM95SJ SL 201J 500V | | |
| C554 | 4010008230 | CER | HM60TJ SL 820J 500V | | |
| C555 | 4010008370 | CER | HM60TJ SL 150J 500V | | |
| C556 | 4010008290 | CER | HM95TJ SL 271J 500V | | |
| C557 | 4010008290 | CER | HM95TJ SL 271J 500V | | |
| C558 | 4010008320 | CER | HM60TJ SL 390J 500V | | |
| C559 | 4010008330 | CER | HM60TJ SL 330J 500V | | |
| C560 | 4010008340 | CER | HM60TJ SL 270J 500V | | |
| C561 | 4010008200 | CER | HM11TJ SL 331J 500V | | |
| C562 | 4010008290 | CER | HM95TJ SL 271J 500V | | |
| C563 | 4010008330 | CER | HM60TJ SL 330J 500V | | |
| C564 | 4010005650 | CER | HM60SJ SL 200J 500V | | |
| C565 | 4010008280 | CER | HM95TJ SL 221J 500V | | |
| C566 | 4010008350 | CER | HM60TJ SL 220J 500V | | |
| C567 | 4030006880 | S.CER | C1608 JB 1H 472K-T | T | 152.2/32.2 |
| C601 | 4030006880 | S.CER | C1608 JB 1H 472K-T | T | 130.2/125 |
| C604 | 4010008230 | CER | HM60TJ SL 820J 500V | | |
| C605 | 4010008370 | CER | HM60TJ SL 150J 500V | | |
| C606 | 4010008280 | CER | HM95TJ SL 221J 500V | | |
| C607 | 4010008220 | CER | HM60TJ SL 680J 500V | | |
| C608 | 4010008350 | CER | HM60TJ SL 220J 500V | | |
| C609 | 4010008340 | CER | HM60TJ SL 270J 500V | | |
| C610 | 4010008200 | CER | HM11TJ SL 331J 500V | | |
| C611 | 4010008230 | CER | HM60TJ SL 820J 500V | | |
| C612 | 4010008360 | CER | HM60TJ SL 180J 500V | | |
| C613 | 4010008260 | CER | HM74TJ SL 151J 500V | | |
| C614 | 4010008230 | CER | HM60TJ SL 820J 500V | | |
| C615 | 4030006880 | S.CER | C1608 JB 1H 472K-T | T | 130.2/18.3 |
| C651 | 4030006880 | S.CER | C1608 JB 1H 472K-T | T | 88.3/124.9 |
| C654 | 4010008360 | CER | HM60TJ SL 180J 500V | | |
| C655 | 4010008320 | CER | HM60TJ SL 390J 500V | | |
| C656 | 4010008280 | CER | HM95TJ SL 221J 500V | | |
| C657 | 4010008220 | CER | HM60TJ SL 680J 500V | | |
| C658 | 4010008360 | CER | HM60TJ SL 180J 500V | | |
| C659 | 4010008380 | CER | HM60TJ SL 120J 500V | | |
| C660 | 4010008280 | CER | HM95TJ SL 221J 500V | | |
| C661 | 4010008240 | CER | HM60TJ SL 101J 500V | | |
| C662 | 4010008390 | CER | HM60TJ SL 100D 500V | | |
| C663 | 4010008250 | CER | HM74TJ SL 121J 500V | | |
| C664 | 4010008320 | CER | HM60TJ SL 390J 500V | | |
| C665 | 4030006880 | S.CER | C1608 JB 1H 472K-T | T | 96.6/28.6 |
| C701 | 4030006880 | S.CER | C1608 JB 1H 472K-T | T | 68.6/127.5 |
| C703 | 4010008370 | CER | HM60TJ SL 150J 500V | | |
| C704 | 4010008350 | CER | HM60TJ SL 220J 500V | | |
| C705 | 4010005650 | CER | HM60SJ SL 200J 500V | | |
| C706 | 4010005860 | CER | HM95SJ SL 201J 500V | | |
| C707 | 4010008310 | CER | HM60TJ SL 470J 500V | | |
| C708 | 4010008370 | CER | HM60TJ SL 150J 500V | | |
| C709 | 4010008280 | CER | HM95TJ SL 221J 500V | | |
| C710 | 4010008350 | CER | HM60TJ SL 220J 500V | | |
| C712 | 4010008330 | CER | HM60TJ SL 330J 500V | | |
| C713 | 4010008310 | CER | HM60TJ SL 470J 500V | | |
| C714 | 4030006880 | S.CER | C1608 JB 1H 472K-T | T | 69.6/18.3 |
| C715 | 4010008360 | CER | HM60TJ SL 180J 500V | | |
| C751 | 4030006880 | S.CER | C1608 JB 1H 472K-T | T | 109.1/125 |
| C755 | 4010008240 | CER | HM60TJ SL 101J 500V | | |
| C756 | 4010008230 | CER | HM60TJ SL 820J 500V | | |
| C757 | 4010008360 | CER | HM60TJ SL 180J 500V | | |
| C758 | 4010008210 | CER | HM60TJ SL 560J 500V | | |
| C759 | 4010008240 | CER | HM60TJ SL 101J 500V | | |
| C760 | 4010008400 | CER | HM60TJ SL 060D 500V | | |
| C761 | 4010008310 | CER | HM60TJ SL 470J 500V | | |
| C763 | 4030006880 | S.CER | C1608 JB 1H 472K-T | T | 115.6/28.6 |
| C764 | 4010005650 | CER | HM60SJ SL 200J 500V | | |
| C765 | 4010008370 | CER | HM60TJ SL 150J 500V | | |
| C801 | 4030006880 | S.CER | C1608 JB 1H 472K-T | T | 168.6/158.6 |
| C804 | 4010008360 | CER | HM60TJ SL 180J 500V | | |
| C805 | 4010008320 | CER | HM60TJ SL 390J 500V | | |
| C806 | 4010008310 | CER | HM60TJ SL 470J 500V | | |
| C807 | 4010005600 | CER | HM60SJ SL 090D 500V | | |
| C808 | 4010008330 | CER | HM60TJ SL 330J 500V | | |
| C809 | 4010008320 | CER | HM60TJ SL 390J 500V | | |
| C810 | 4010008410 | CER | HM60TJ SL 030C 500V | | |
| C811 | 4010005560 | CER | HM60SJ SL 050C 500V | | |
| C813 | 4030006880 | S.CER | C1608 JB 1H 472K-T | T | 175.6/26 |
| | | | | | |
| RL401 | 6330001471 | RLY | AJS1311F-K2 | | |
| RL402 | 6330001471 | RLY | AJS1311F-K2 | | |
| RL451 | 6330001471 | RLY | AJS1311F-K2 | | |
| RL452 | 6330001471 | RLY | AJS1311F-K2 | | |
| RL501 | 6330001471 | RLY | AJS1311F-K2 | | |
| RL502 | 6330001471 | RLY | AJS1311F-K2 | | |
| RL551 | 6330001471 | RLY | AJS1311F-K2 | | |
| RL552 | 6330001471 | RLY | AJS1311F-K2 | | |
| RL601 | 6330001471 | RLY | AJS1311F-K2 | | |
| RL602 | 6330001471 | RLY | AJS1311F-K2 | | |
| RL651 | 6330001471 | RLY | AJS1311F-K2 | | |
| RL652 | 6330001471 | RLY | AJS1311F-K2 | | |
| RL701 | 6330001471 | RLY | AJS1311F-K2 | | |
| RL702 | 6330001471 | RLY | AJS1311F-K2 | | |
| RL751 | 6330001471 | RLY | AJS1311F-K2 | | |
| RL752 | 6330001471 | RLY | AJS1311F-K2 | | |
| RL801 | 6330001460 | RLY | FTR-F1CA012V | | |
| RL802 | 6330001460 | RLY | FTR-F1CA012V | | |
| | | | | | |
| J901 | 6510017930 | CNR | 1771P145-20 | | |
| J902 | 6510022031 | S.CNR | B10B-ZR-SM4-TF (LF) (SN) | T | 145.3/165.2 |
| J903 | 6510019971 | S.CNR | 52808-1071 | T | 4/156 |
| J904 | 6510017930 | CNR | 1771P145-20 | | |

## [FILTER UNIT]

| REF NO. | ORDER NO. | DESCRIPTION | | M. | H/V LOCATION |
|---|---|---|---|---|---|
| J905 | 6510019421 | S.CNR | B8B-ZR-SM4-TF (LF) (SN) | T | 146.8/160.2 |

## [MEMORY BOARD]

| REF NO. | ORDER NO. | DESCRIPTION | | M. | H/V LOCATION |
|---|---|---|---|---|---|
| IC1 | 1130013514 | S.IC | JS28F128J3D-75(SX-2590A-8) | T | 39.8/26.2 |
| IC2 | 1130013515 | S.IC | JS28F128J3D-75(SX-2590A-9) | T | 24/26.2 |
| | | | | | |
| C1 | 4030011600 | S.CER | C1608 JB 1E 104K-T | T | 41.8/38.8 |
| C2 | 4030011600 | S.CER | C1608 JB 1E 104K-T | T | 39.9/13.2 |
| C3 | 4030011600 | S.CER | C1608 JB 1E 104K-T | T | 36.8/13.2 |
| C4 | 4030011600 | S.CER | C1608 JB 1E 104K-T | T | 26/38.8 |
| C5 | 4030011600 | S.CER | C1608 JB 1E 104K-T | T | 24/13.2 |
| C6 | 4030011600 | S.CER | C1608 JB 1E 104K-T | T | 21/13.2 |
| | | | | | |
| J1 | 6510024210 | S.CNR | AXK6S30435P | T | 55/20 |
| J2 | 6510024200 | S.CNR | AXK6S40435P | T | 10/20 |

M.=Mounted side (T: Mounted on the Top side, B: Mounted on the Bottom side)
S.=Surface mount

# BOARD LAYOUTS

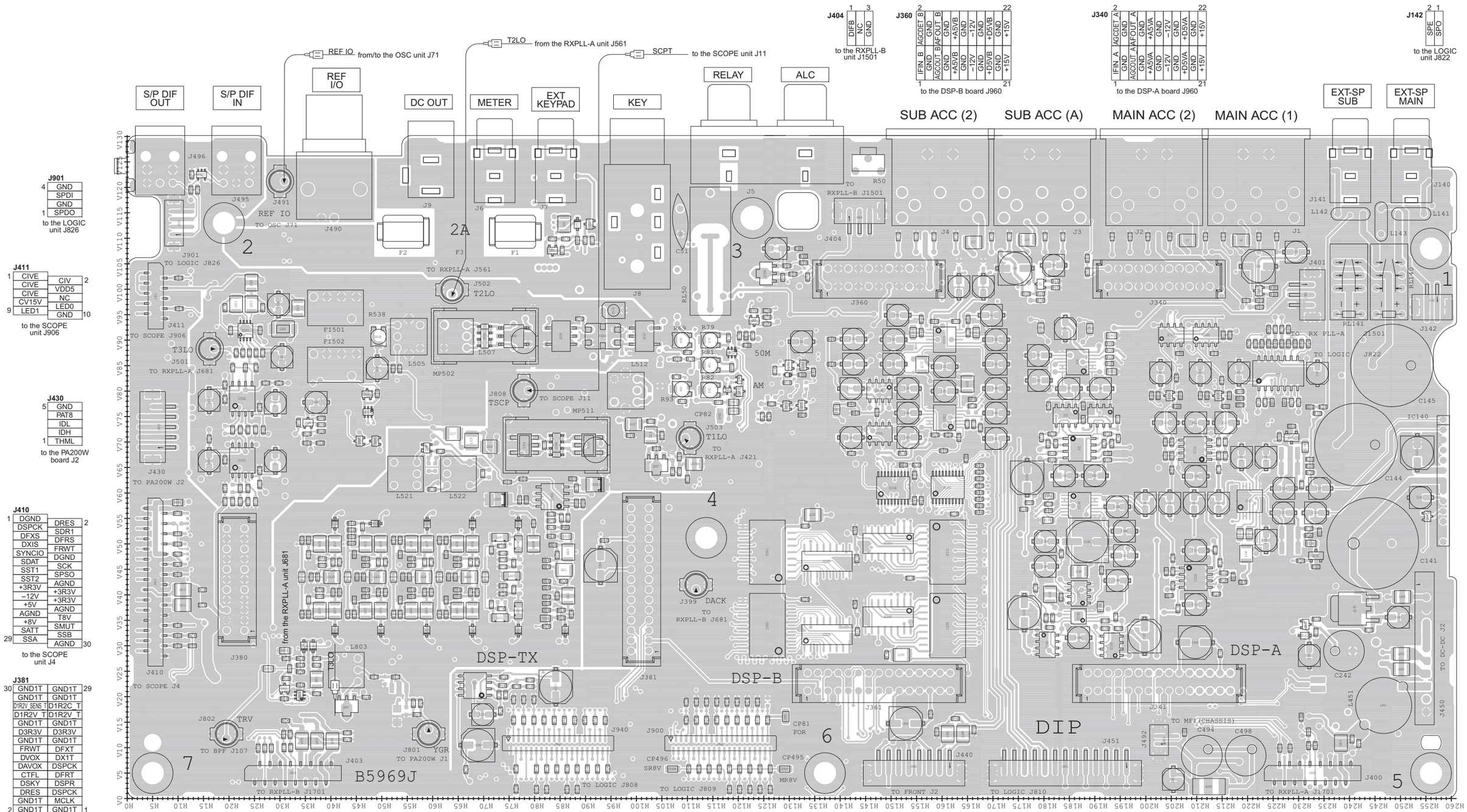


**J901**

| | | |
|---|---|---|
| 4 | GND | |
| | SPDI | |
| | GND | |
| 1 | SPDO | |

to the LOGIC unit J826

**J411**

| | | | |
|---|---|---|---|
| 1 | CIVE | CIV | 2 |
| | CIVE | VDD5 | |
| | CIVE | NC | |
| | CV15V | LED0 | |
| 9 | LED1 | GND | 10 |

to the SCOPE unit J906

**J430**

| | | |
|---|---|---|
| 5 | GND | |
| | PAT8 | |
| | IDL | |
| | IDH | |
| 1 | THML | |

to the PA200W board J2

**J410**

| | | | |
|---|---|---|---|
| 1 | DGND | DRES | 2 |
| | DSPCK | SDR1 | |
| | DFXS | DFRS | |
| | DXIS | FRWT | |
| | SYNCIO | DGND | |
| | SDAT | SCK | |
| | SST1 | SPSO | |
| | SST2 | AGND | |
| | +3R3V | +3R3V | |
| | −12V | +3R3V | |
| | +5V | AGND | |
| | AGND | T8V | |
| | +8V | SMUT | |
| | SATT | SSB | |
| 29 | SSA | AGND | 30 |

to the SCOPE unit J4

**J381**

| | | | |
|---|---|---|---|
| 30 | GND1T | GND1T | 29 |
| | GND1T | GND1T | |
| | D1R2V_SENS_T | D1R2C_T | |
| | D1R2V_T | D1R2V_T | |
| | GND1T | GND1T | |
| | D3R3V | D3R3V | |
| | GND1T | GND1T | |
| | FRWT | DFXT | |
| | DVOX | DX1T | |
| | DAVOX | DSPCK | |
| | CTFL | DFRT | |
| | DSKY | DSPR | |
| | DRES | DSPCK | |
| | GND1T | MCLK | |
| 2 | GND1T | GND1T | 1 |

to the DSP-TX board J961

**J404**

| | | |
|---|---|---|
| 1 | DIFB | 3 |
| | NC | |
| | GND | |

to the RXPLL-B unit J1501

**J360**

| | | | |
|---|---|---|---|
| 2 | AGCDET_B | | 22 |
| | GND | GND | |
| | AFOUT_B | GND | |
| | GND | +A5VB | |
| | GND | GND | |
| | −12V | GND | |
| | GND | +D5VB | |
| | GND | GND | |
| | +15V | +15V | |
| 1 | IFIN_B | | 21 |

to the DSP-B board J960

**J340**

| | | | |
|---|---|---|---|
| 2 | AGCDET_A | | 22 |
| | GND | GND | |
| | AGCOUT_A | AFOUT_A | |
| | GND | GND | |
| | +A5VA | +A5VA | |
| | GND | GND | |
| | −12V | −12V | |
| | GND | +D5VA | |
| | +D5VA | +D5VA | |
| | GND | GND | |
| | +15V | +15V | |
| 1 | IFIN_A | | 21 |

to the DSP-A board J960

**J142**

| | | |
|---|---|---|
| 2 | SPE | 1 |
| | SPO | |

to the LOGIC unit J822

**J403**

| | | | | | | | | |
|---|---|---|---|---|---|---|---|---|
| 2 | MSTBB | MCK | GND | AGCIB | +3R3V | −12V | +15V | GND | 16 |
| | GND | MDAT | GND | +8V | AGCOB | NC | NC | +15V | |
| 1 | | | | | | | | | 15 |

to the RXPLL-B unit J1701

**J940**

| | | | | | | | | | | | | | | | | | | | | |
|---|---|---|---|---|---|---|---|---|---|---|---|---|---|---|---|---|---|---|---|---|
| 1 | MUTEI | EPAD | CTFL | DSKY | DAVOX | DVOX | DFTX | DXIT | DFRT | FRWT | DRES | RXIS | DFRS | DFXS | GND | SST2 | SPSO | SST1 | SDAT | SCK | 39 |
| | GND | METS | METM | SYNCIO | TNDB | RTDB | VSQB | NSQB | DFXB | DX1B | DFRB | TNDA | RTDA | VSQA | NSQA | DX1A | DFRA | DSPR | DSPCK | | |
| 2 | | | | | | | | | | | | | | | | | | | | | 40 |

to the LOGIC unit J808

**J900**

| | | | | | | | | | | | | | | | | | | | | |
|---|---|---|---|---|---|---|---|---|---|---|---|---|---|---|---|---|---|---|---|---|
| 1 | CIV | VOXAF | LED0 | LED1 | GND | KEY | DULSB | DULSA | GND | SQLS | SQLM | SQLAS | SQLAM | THML | ALCL | VDL | IDL | FANV | REFV | FORV | 39 |
| | CIVE | VOXAFE | MADT | MCK | MSTB1 | MSTB2 | ASTB1 | ASTB2 | RSTBA | RSTBB | SR8V | MR8V | T8V | ASND | SEND | SENI | RTKI | TRVI | EXRL2 | EXRL1 | |
| 2 | | | | | | | | | | | | | | | | | | | | | 40 |

to the LOGIC unit J809

**J361**

| | | | | | | | | | | | | | | | | | | | | |
|---|---|---|---|---|---|---|---|---|---|---|---|---|---|---|---|---|---|---|---|---|
| 2 | GND1B | GND1B | DRES | RTDB | NSQB | DULSB | DSPCK | GND1B | TNDB | FRWT | GND1B | GND1B | D3R3V | GND1B | D1R2V_SENS_B | D1R2V_B | GND1B | | | | 30 |
| | GND1B | MCLK | DSPCK | DSPR | DFRB | VSQB | DSPCK | DX1B | DFXB | GND1B | D3R3V | GND1B | D1R2V_B | D1R2V_A | GND1B | | | | | | |
| 1 | | | | | | | | | | | | | | | | | | | | | 29 |

to the DSP-B board J961

**J341**

| | | | | | | | | | | | | | | | | | | | | |
|---|---|---|---|---|---|---|---|---|---|---|---|---|---|---|---|---|---|---|---|---|
| 2 | GND1A | GND1A | DRES | RTDA | NSQL | DULSA | GND1A | TNDA | FRWT | GND1A | D3R3V | GND1A | D1R2V_SENS_A | D1R2V_A | GND1A | | | | | | 30 |
| | GND1A | MCLK | DSPCK | DSPR | VSQA | DSPCK | DX1A | DFXA | GND1A | GND1A | D3R3V | GND1A | D1R2V_A | D1R2V_A | GND1A | | | | | | |
| 1 | | | | | | | | | | | | | | | | | | | | | 29 |

to the DSP-A board J961

**J400**

| | | | | | | | | |
|---|---|---|---|---|---|---|---|---|
| 2 | RSTBA | MCK | GND | AGCIA | +3R3V | −12V | +15V | GND | 16 |
| | GND | MDAT | GND | +8V | AGCOA | NC | NC | +15V | |
| 1 | | | | | | | | | 15 |

to the RXPLL-A unit J1701

**J450**

| | | |
|---|---|---|
| 1 | GND | |
| | VDD5 | |
| | GND | |
| | +3R3V | |
| | +3R3V | |
| | +3R3V | |
| | +5V | |
| | +8V | |
| | +15V | |
| | +8V | |
| | −12V | |
| 12 | GND | |

to the DC-DC unit J2

**J440**

| | | |
|---|---|---|
| 8 | AFE | 1 |
| | AFO | |
| | PHE | |
| | PHOM | |
| | PHE | |
| | PHOS | |
| | MICE | |
| | MICI | |

to the VR-A board J2

**J451**

| | | |
|---|---|---|
| 13 | GND | 1 |
| | MICPLAYE | |
| | MICPLAY | |
| | MICRECE | |
| | MICREC | |
| | SPLAYE | |
| | SPLAY | |
| | MPLAYE | |
| | MPLAY | |
| | RXSRECE | |
| | RXSREC | |
| | RXMRECE | |
| | RXMREC | |

to the LOGIC unit J810

**J492**

| | | |
|---|---|---|
| 2 | DFAN | 1 |
| | GND | |

to the CHASSIS unit MF1

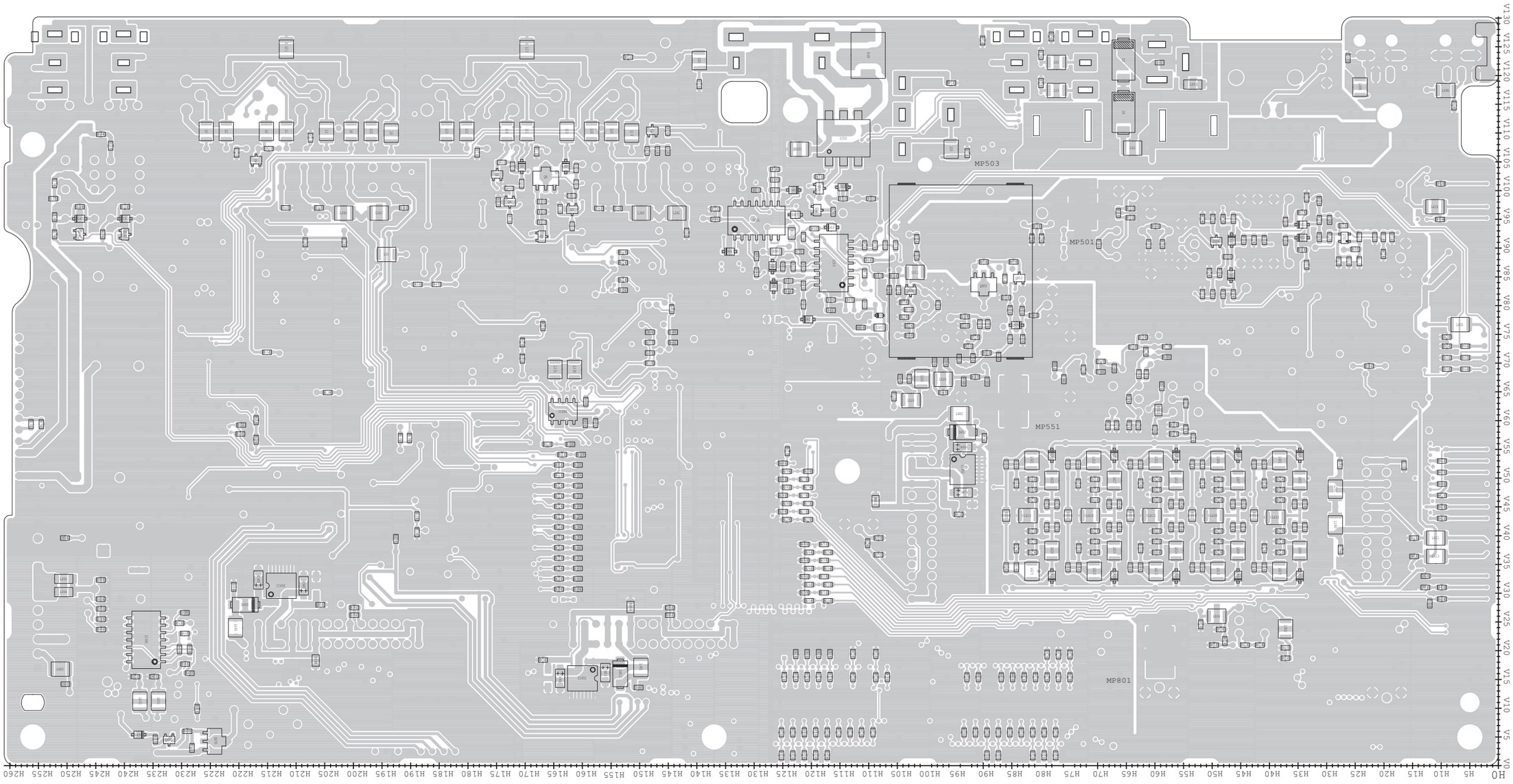
MP503
MP501
MP551
MP801

# SECTION 11 VOLTAGE DIAGRAMS

## DISPLAY BOARD

## CF BOARD

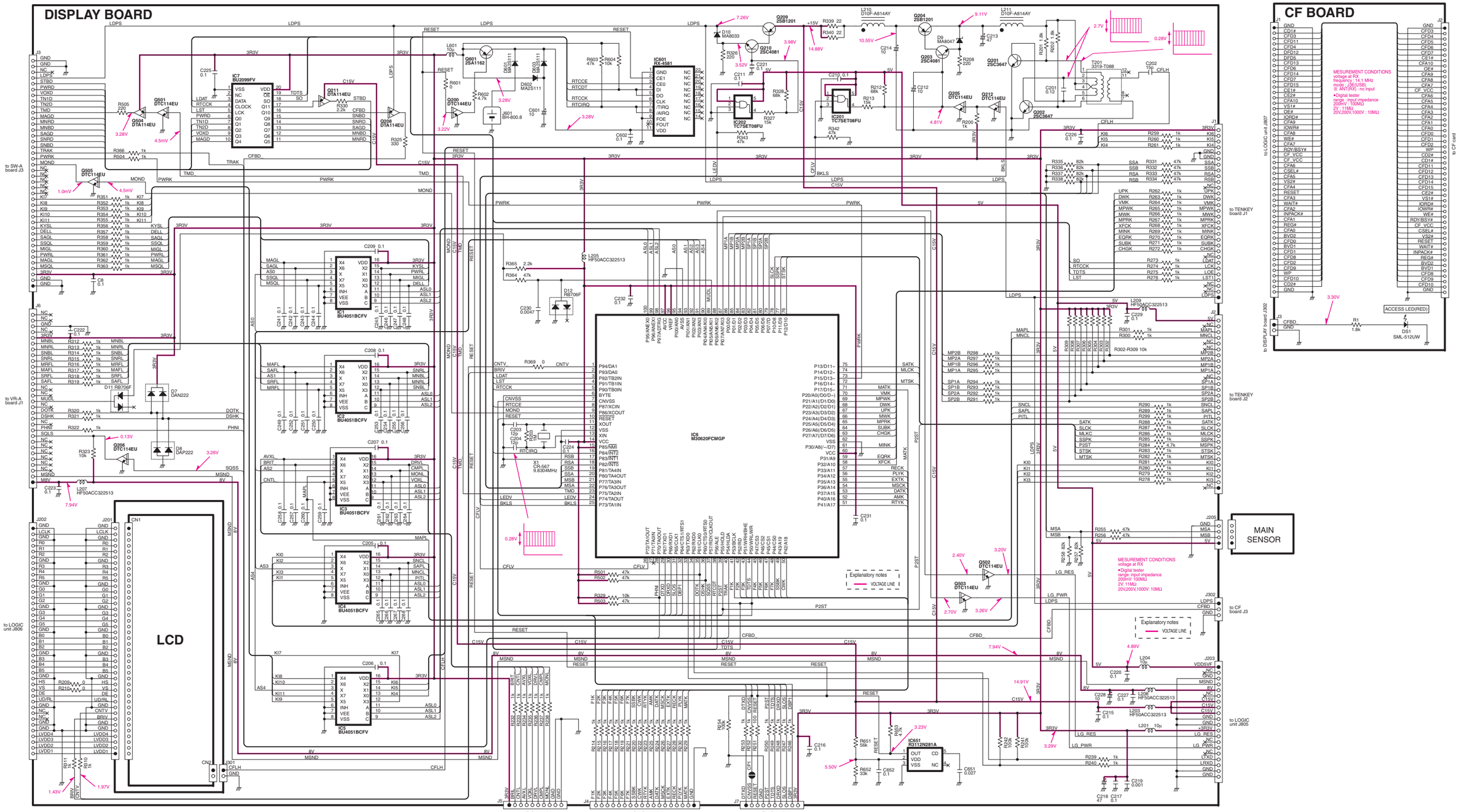

## SW-A BOARD

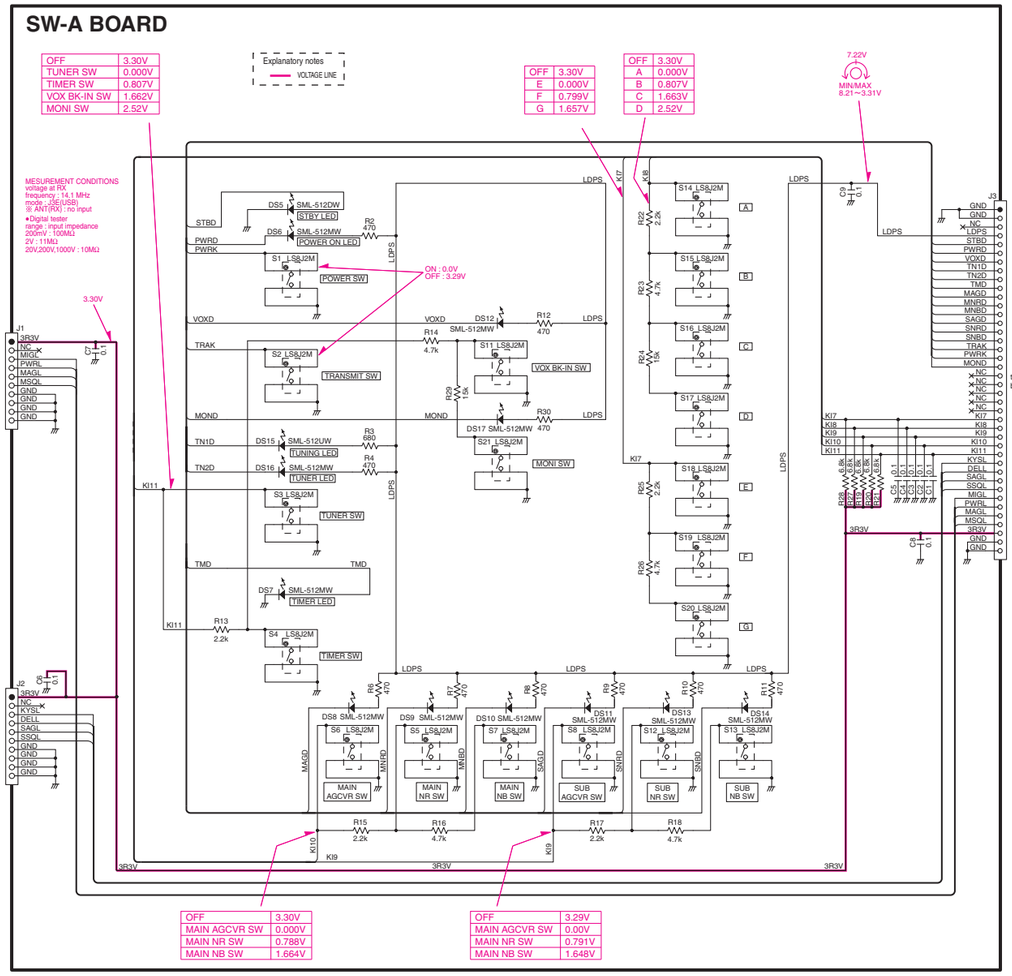


## VR-A BOARD

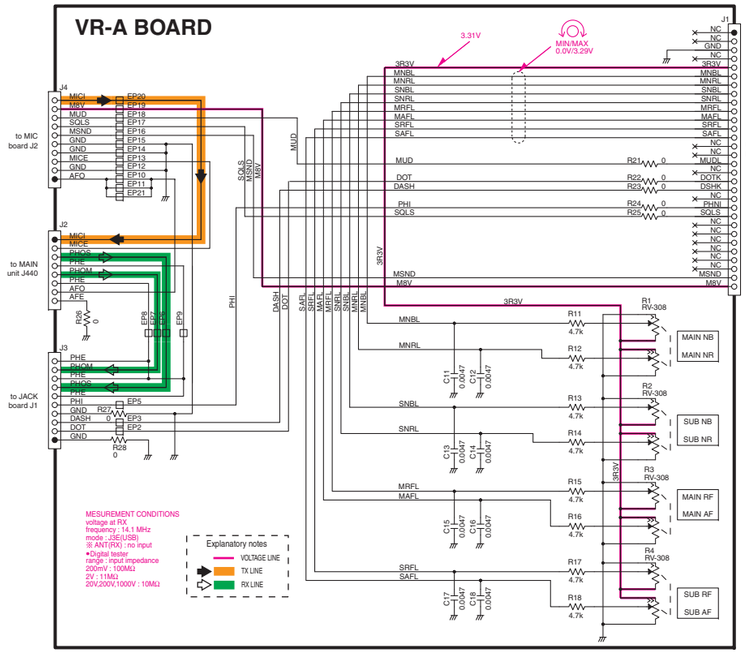


## VR-D BOARD




## MIC BOARD

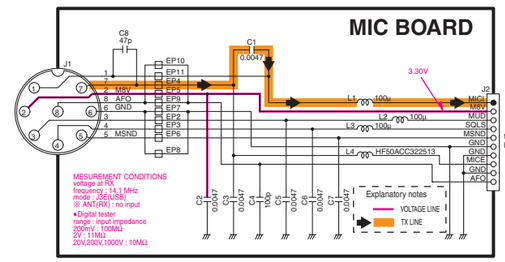


## SW-B BOARD

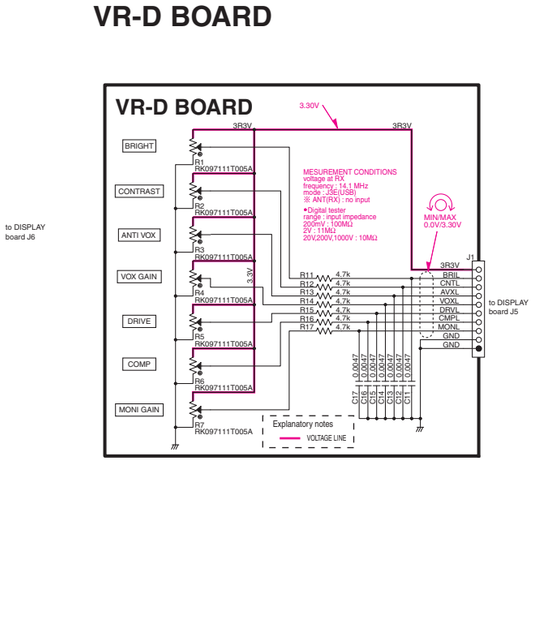


## VR-B BOARD

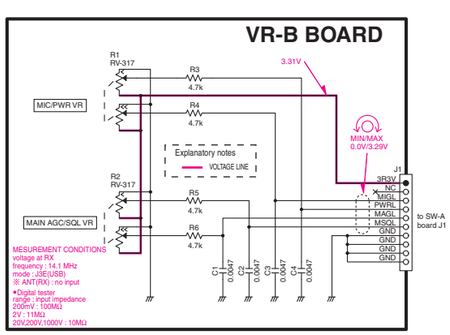


## VR-C BOARD

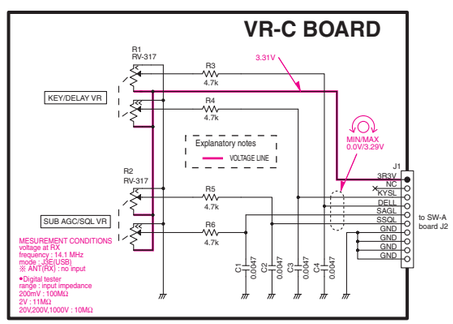


## JACK BOARD

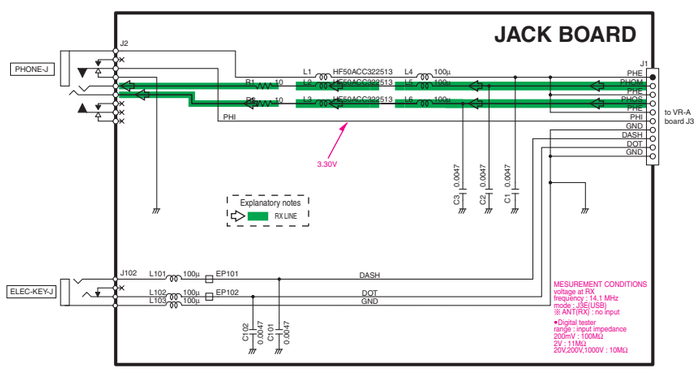

# TENKEY BOARD

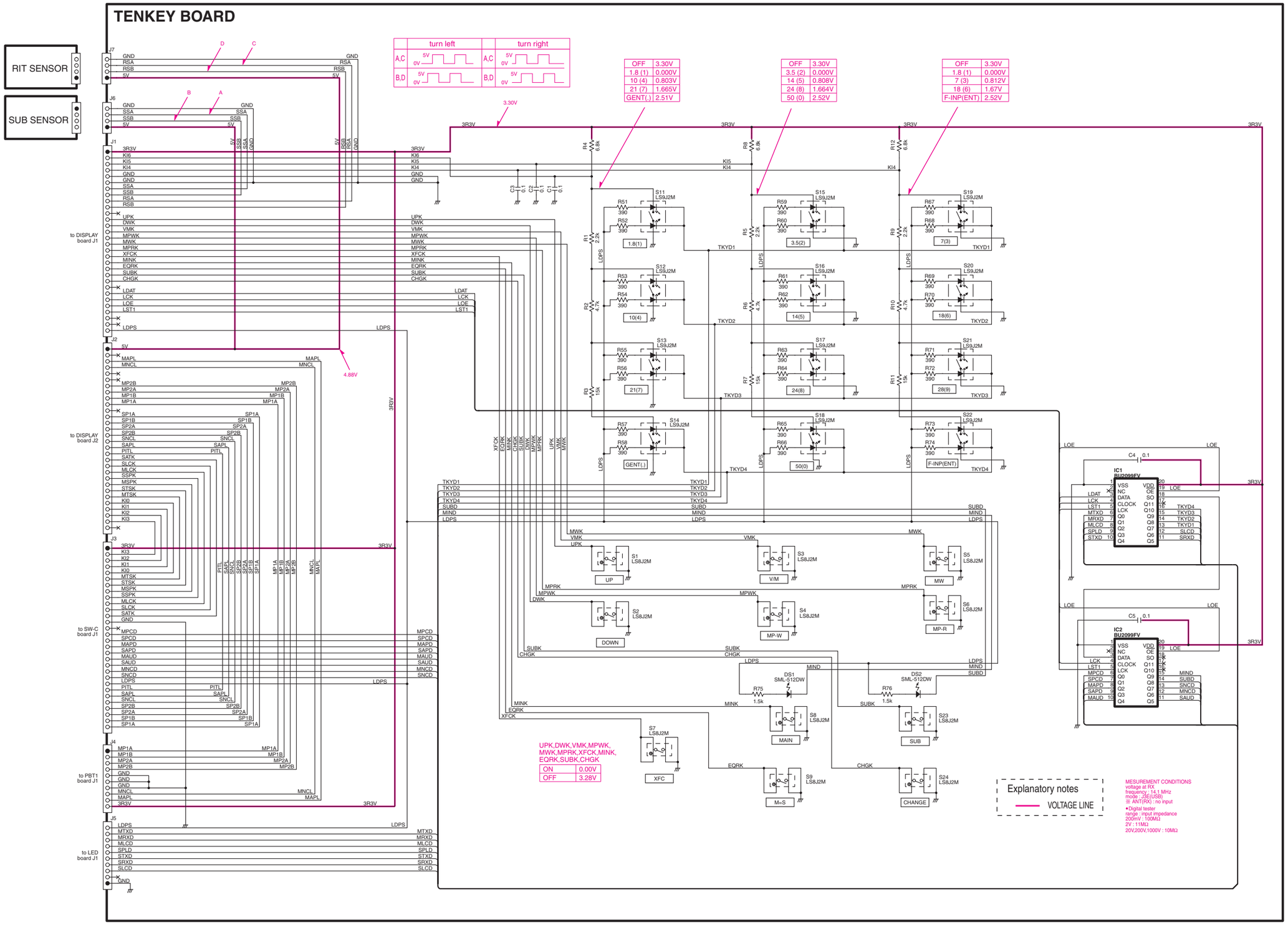

## SW-C BOARD

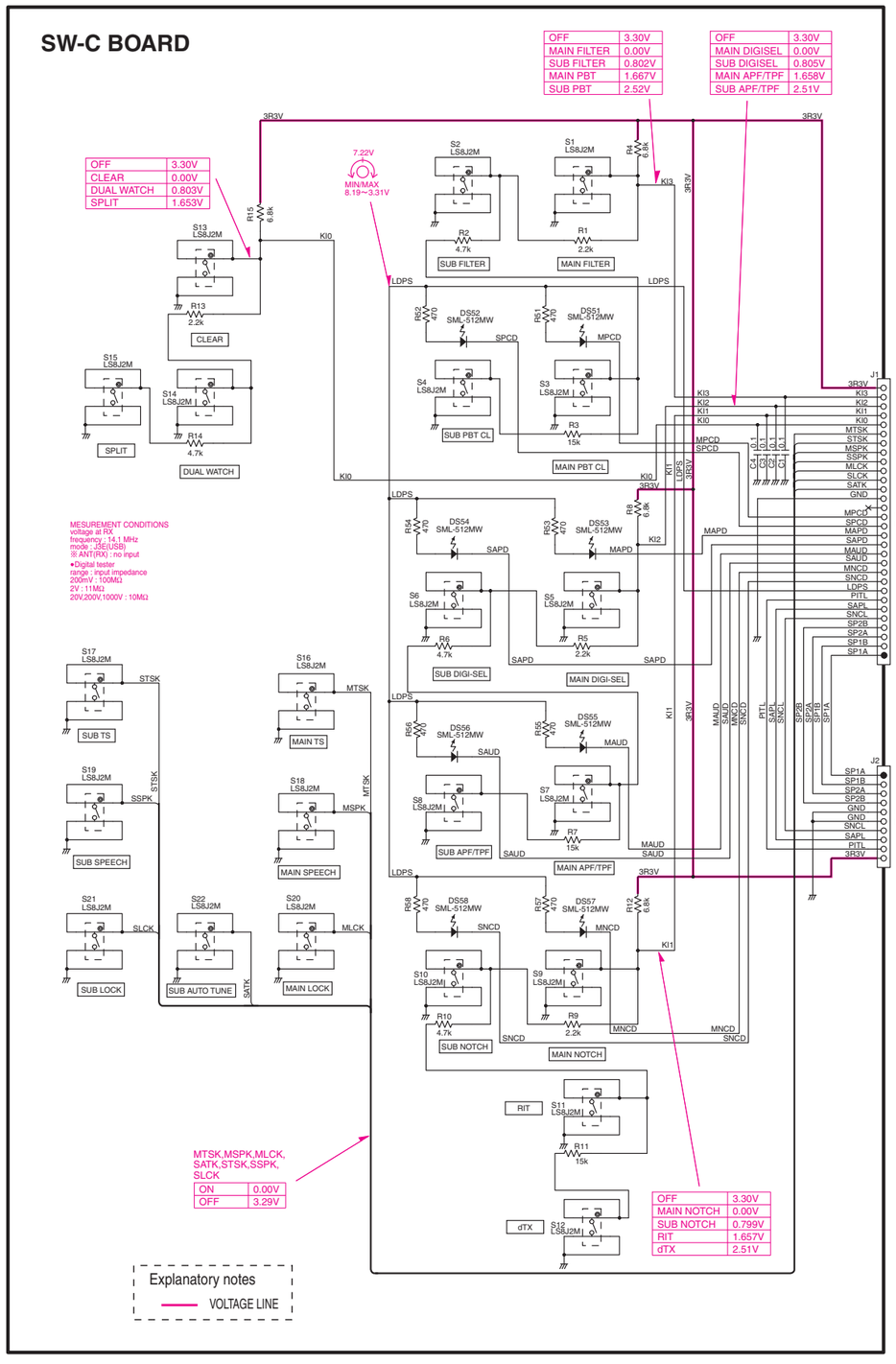


## PBT1 BOARD

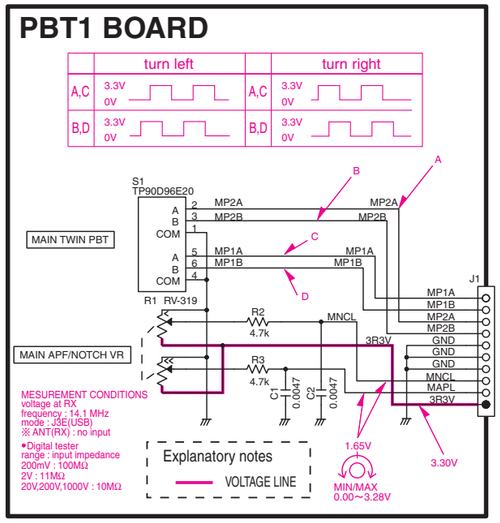


## PBT2 BOARD

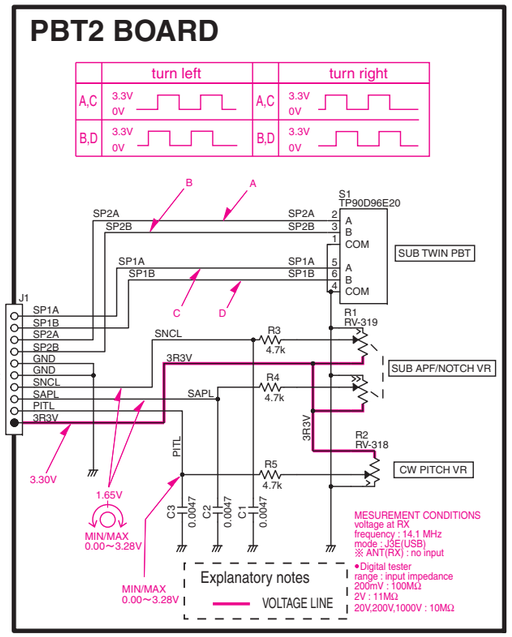


## LED BOARD

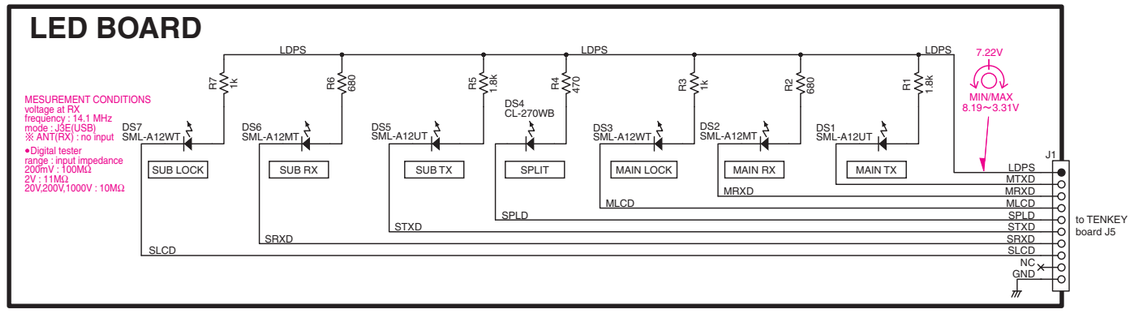

# LOGIC UNIT AND MEMORY BOARD

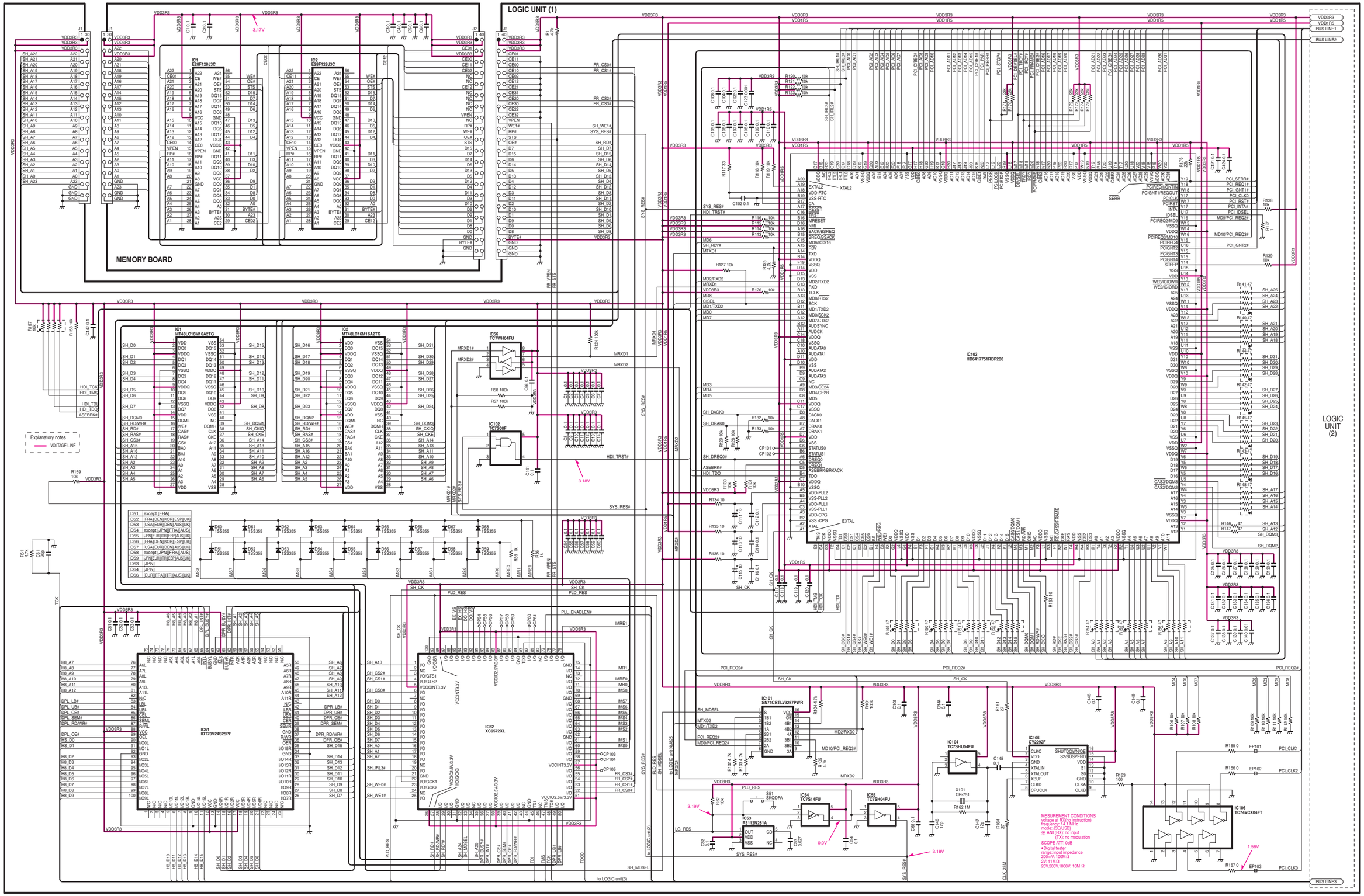

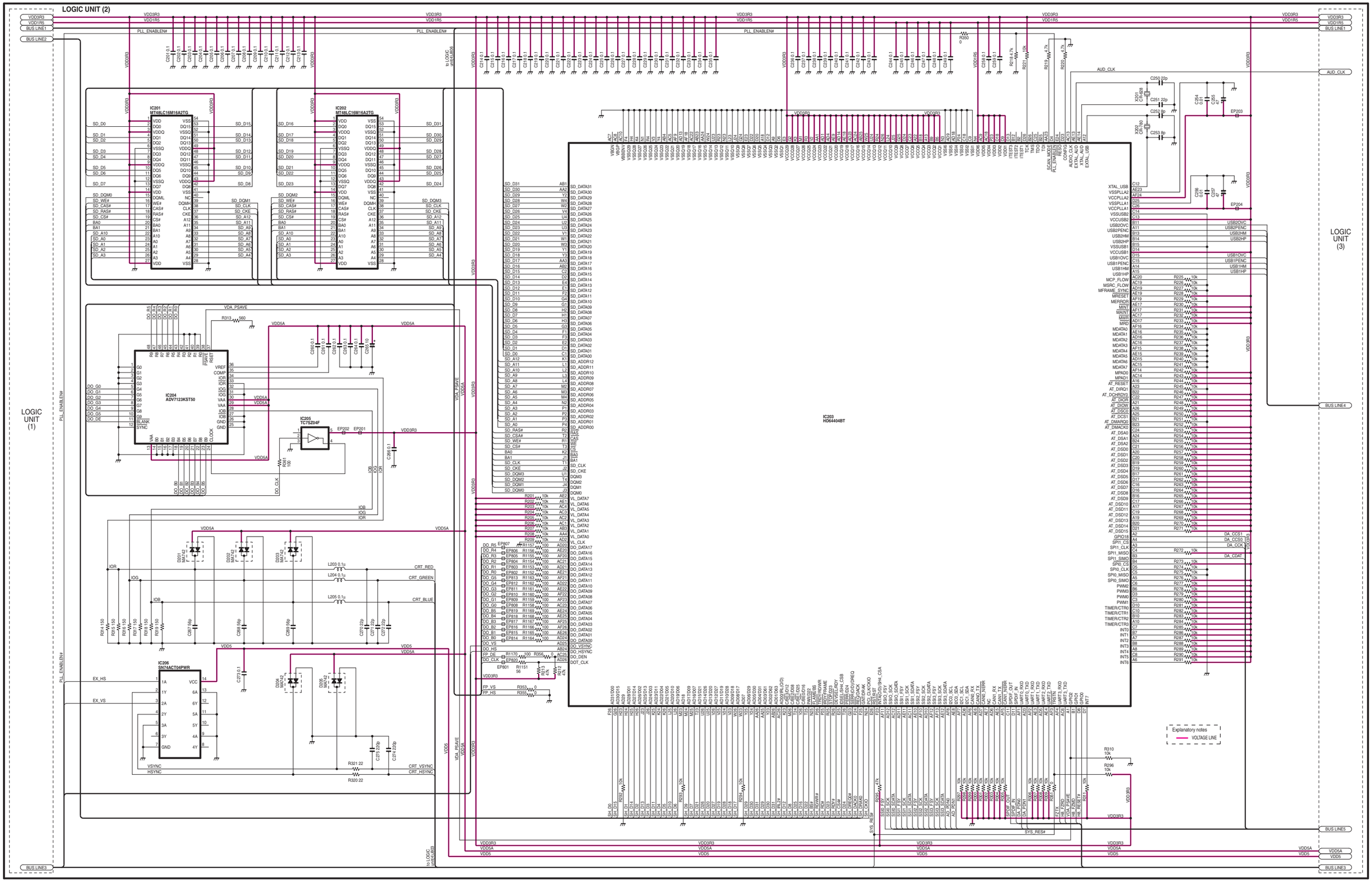
LOGIC UNIT (2)
LOGIC UNIT (1)
LOGIC UNIT (3)
IC201 MT48LC16M16A2TG
IC202 MT48LC16M16A2TG
IC203 HD64404BT
IC204 ADV7123KST50
IC205 TC7SZ04F
IC206 SN74ACT04PWR
Explanatory notes
VOLTAGE LINE
CRT_RED
CRT_GREEN
CRT_BLUE
CRT_VSYNC
CRT_HSYNC
SYS_RES#
AUD_CLK
BUS LINE1
BUS LINE2
BUS LINE3
BUS LINE4
BUS LINE5

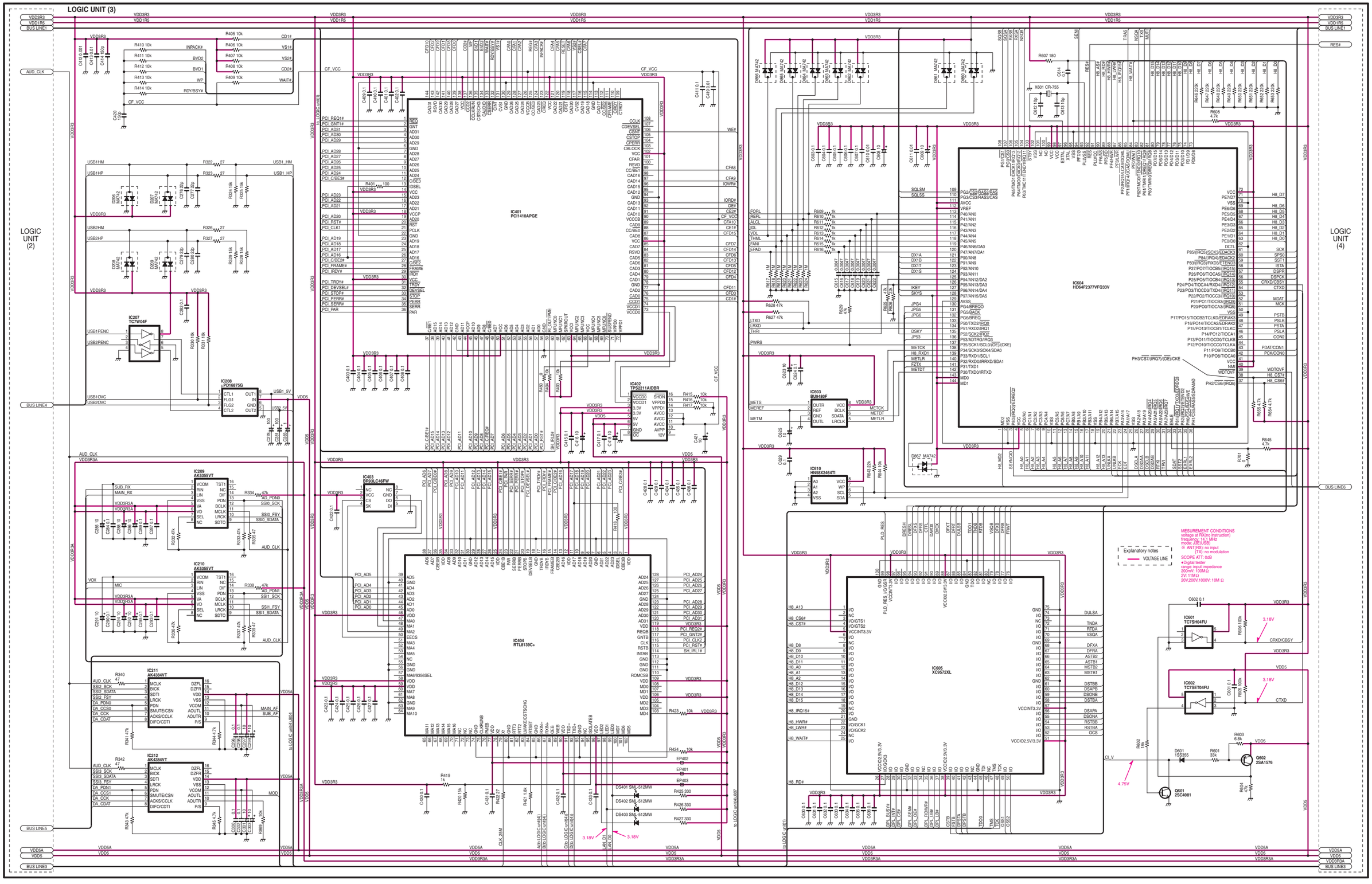
LOGIC UNIT (3)
LOGIC UNIT (2)
LOGIC UNIT (4)
IC401 PCI1410APGE
IC404 RTL8139C+
IC605 XC9572XL
IC604 HD64F2377VFQ33V
IC207 TC7W04F
IC208 JPD16875G
IC209 AK5355VT
IC210 AK5355VT
IC211 AK4384VT
IC212 AK4384VT
IC402 TPS2211AIDBR
IC403 BR93LC46FW
IC603 BU9480F
IC610 HN58X2464TI
IC601 TC7SH04FU
IC602 TC7SET04FU
Q601 2SC4081
Q602 2SA1576
Explanatory notes
VOLTAGE LINE
MESUREMENT CONDITIONS
voltage at RX(no instruction)
frequency: 14.1 MHz
mode: JSE(USB)
※ ANT(RX): no input
(TX): no modulation
SCOPE ATT: 0dB
•Digital tester
range: input impedance
200mV: 100MΩ
2V: 11MΩ
20V,200V,1000V: 10M Ω

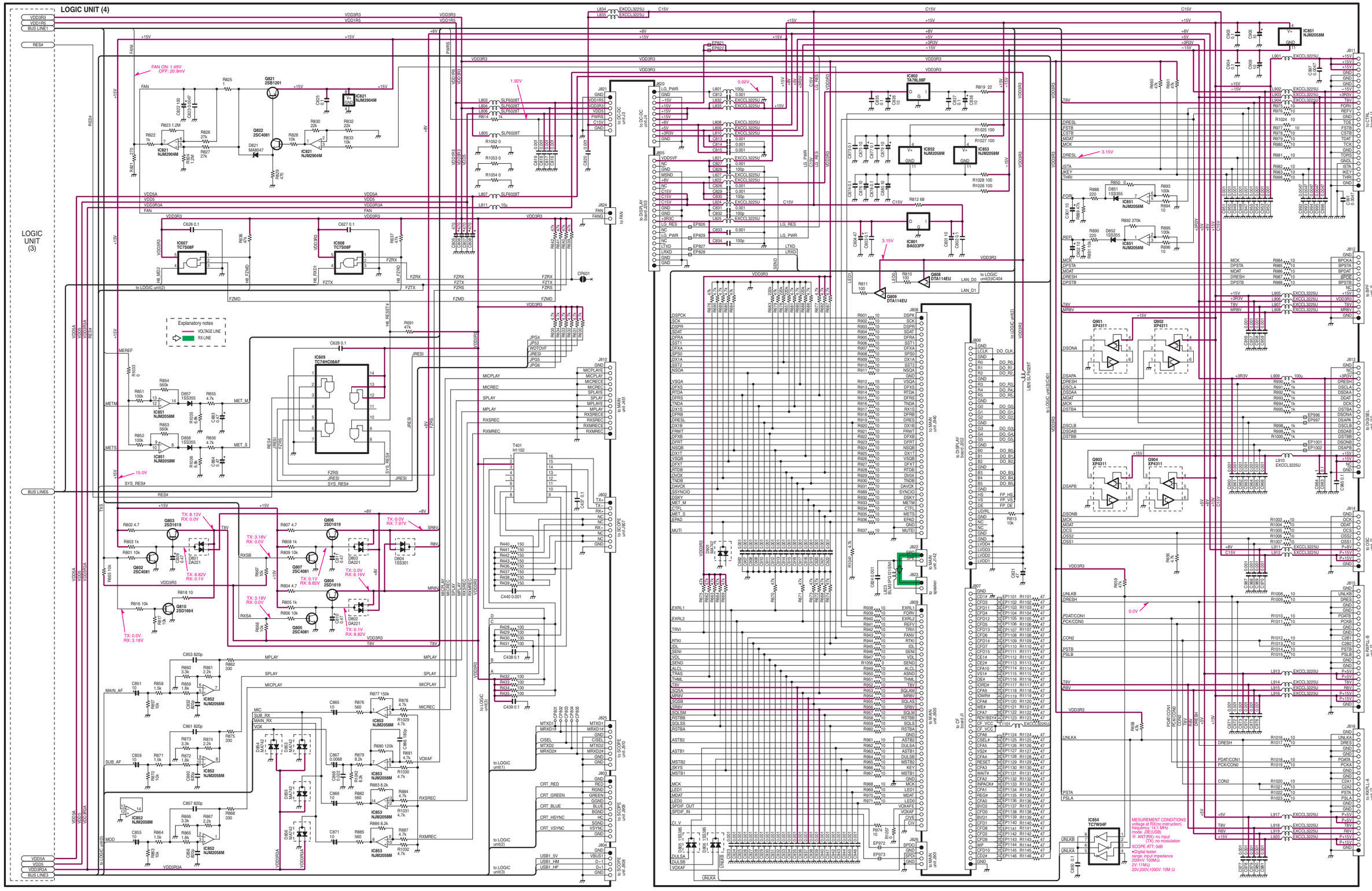
LOGIC UNIT (4)
LOGIC UNIT (3)
Explanatory notes
VOLTAGE LINE
RX LINE
FAN ON: 1.49V
OFF: 20.9mV
TX: 8.13V
RX: 0.0V
TX: 0.0V
RX: 7.97V
TX: 3.18V
RX: 0.0V
TX: 0.1V
RX: 8.82V
TX: 0.0V
RX: 8.19V
TX: 8.82V
RX: 0.1V
TX: 0.0V
RX: 3.18V
1.92V
0.02V
3.15V
15.0V
MESUREMENT CONDITIONS
voltage at RX(no instruction)
frequency: 14.1 MHz
mode: J2E(USB)
※ ANT(RX): no input
(TX): no modulation
SCOPE ATT: 0dB
•Digital tester
range: input impedance
200mV: 10MΩ
2V: 11MΩ
20V,200V,1000V: 10M Ω

# MAIN UNIT

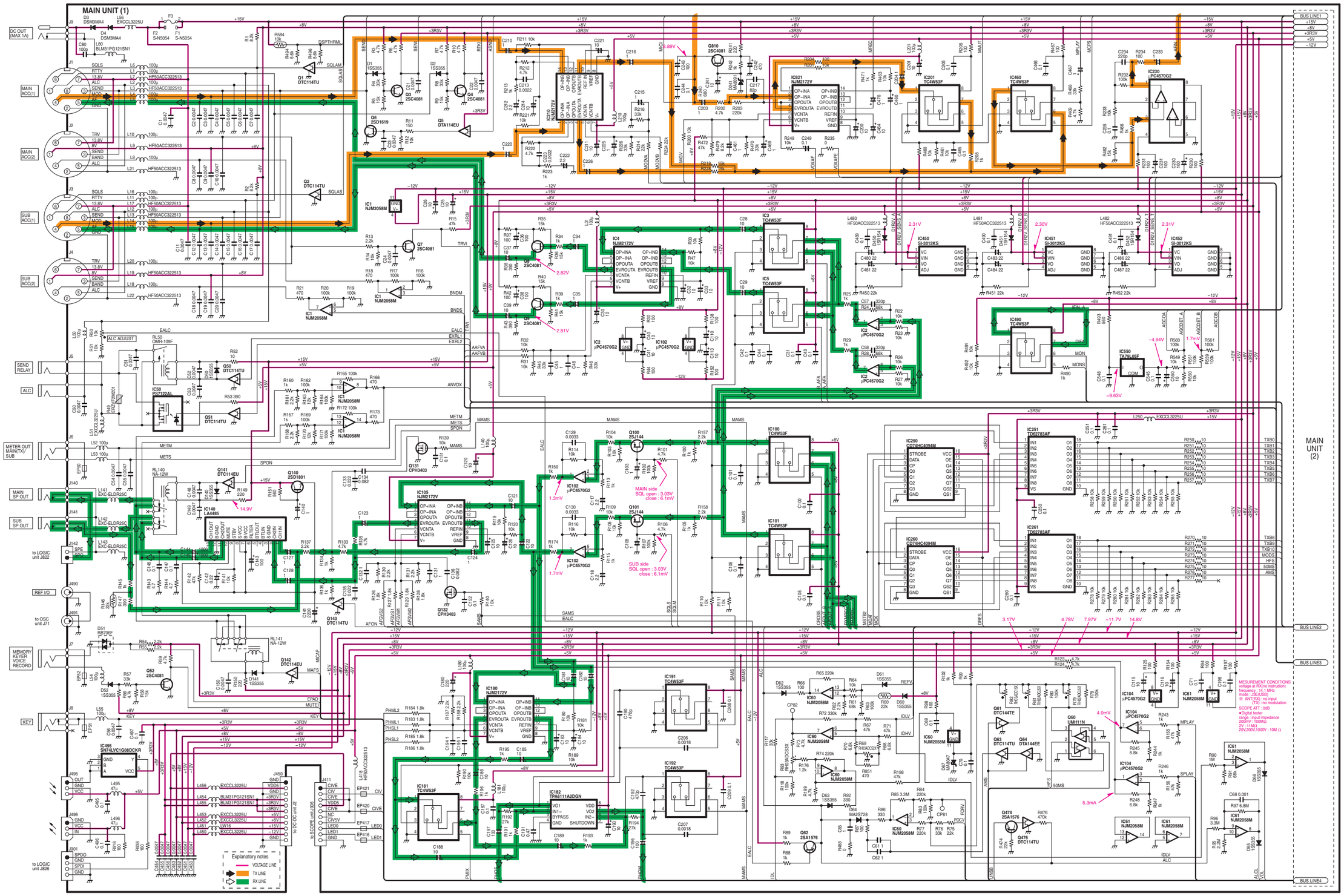
MAIN UNIT (1)
DC OUT (MAX 1A)
MAIN ACC(1)
MAIN ACC(2)
SUB ACC(1)
SUB ACC(2)
METER OUT MAIN/TX/ SUB
MAIN SP OUT
SUB SP OUT
to LOGIC unit J822
REF I/O
to OSC unit J71
MEMORY KEYER VOICE RECORD
KEY
SEND, RELAY
ALC
to LOGIC unit J826
to SCOPE unit J906
to DC-DC unit J2
Explanatory notes
VOLTAGE LINE
TX LINE
RX LINE
BUS LINE1
BUS LINE2
BUS LINE3
BUS LINE4
MAIN UNIT (2)
MEASUREMENT CONDITIONS
voltage at RX(no instruction)
frequency : 14.1 MHz
mode : CW(USB)
⊞ ANT(RX) : no input
(TX) : no modulation
SCOPE ATT : 0dB
•Digital tester
range : input impedance
20mV : 100MΩ
2V : 11MΩ
20V,200V,1000V : 10M Ω
2.89V
2.82V
2.81V
2.31V
2.30V
2.31V
−4.94V
1.7mV
−9.63V
4.0mV
5.3mA
3.17V
4.78V
7.97V
−11.7V
14.8V
14.9V
1.3mV
1.7mV
MAIN side SQL open : 3.03V close : 6.1mV
SUB side SQL open : 3.03V close : 6.1mV

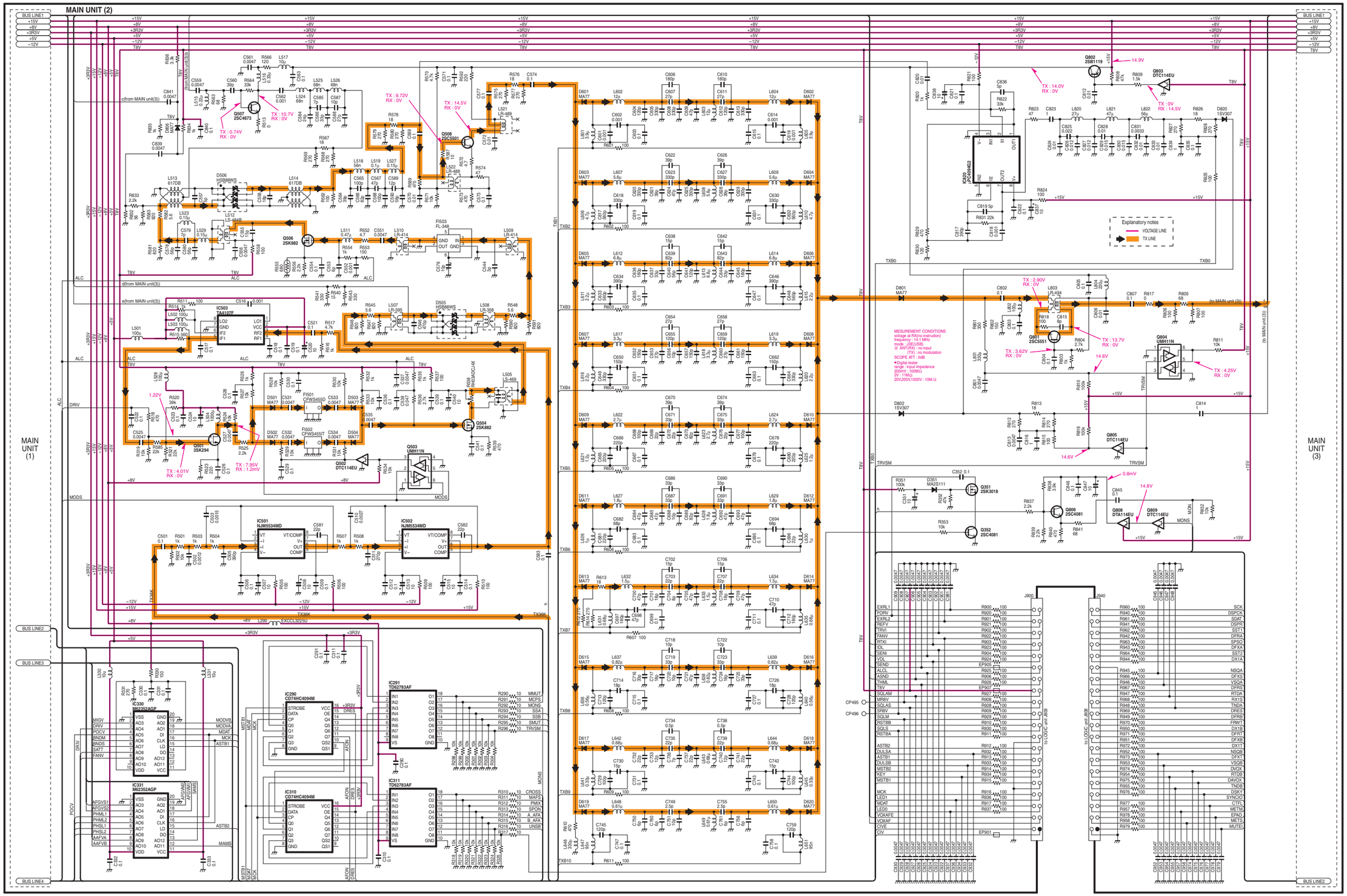
MAIN UNIT (2)
MAIN UNIT (1)
MAIN UNIT (3)
BUS LINE1
BUS LINE2
BUS LINE3
BUS LINE4
+15V
+8V
+3R3V
+5V
−12V
T8V
Explanatory notes
VOLTAGE LINE
TX LINE
MESUREMENT CONDITIONS
voltage at RX(no instruction)
frequency : 14.1 MHz
mode : JSE(USB)
※ ANT(RX) : no input
(TX) : no modulation
SCOPE ATT : 0dB
•Digital tester
single : input impedance
200mV : 100MΩ
2V : 11MΩ
20V,200V,1000V : 10M Ω
IC503 TA4107F
IC330 M62352AGP
IC331 M62352AGP
IC290 CD74HC4094M
IC310 CD74HC4094M
IC291 TD62783AF
IC311 TD62783AF
IC501 NJM5534MD
IC502 NJM5534MD
IC200 PQ20WZ5K2
Q507 2SC4673
Q508 2SC5501
Q506 2SK882
Q504 2SK882
Q501 3SK294
Q503 UMH11N
Q502 DTC114EU
Q802 2SB1119
Q803 DTC114EU
Q807 2SC5551
Q804 UMH11N
Q805 DTC114EU
Q351 2SK3018
Q352 2SC4081
Q806 2SC4081
Q808 DTA114EU
Q809 DTC114EU
TX : 9.72V RX : 0V
TX : 14.5V RX : 0V
TX : 10.7V RX : 0V
TX : 0.74V RX : 0V
TX : 4.01V RX : 0V
TX : 7.95V RX : 1.2mV
TX : 14.0V RX : 0V
TX : 0V RX : 14.5V
TX : 2.90V RX : 0V
TX : 13.7V RX : 0V
TX : 3.62V RX : 0V
TX : 4.25V RX : 0V
1.22V
14.9V
14.6V
14.8V
0.8mV
TXB0
TXB1
TXB2
TXB3
TXB4
TXB5
TXB6
TXB7
TXB8
TXB9
TXB10
TX36K
TRVSM
MODS
MONS
DRIV
ALC
PSCV
(from MAIN unit(3))
(to MAIN unit (3))
to LOGIC unit #808
to LOGIC unit #809
EXCCL3225U
RHRG3D4C4K
FI501 CFWS455D
FI502 CFWS455T
FI503 FL-346
EP901
EP902
EP903
EP904
EP905
EP906
EP907
EP908
J900
J940
CP495
CP496

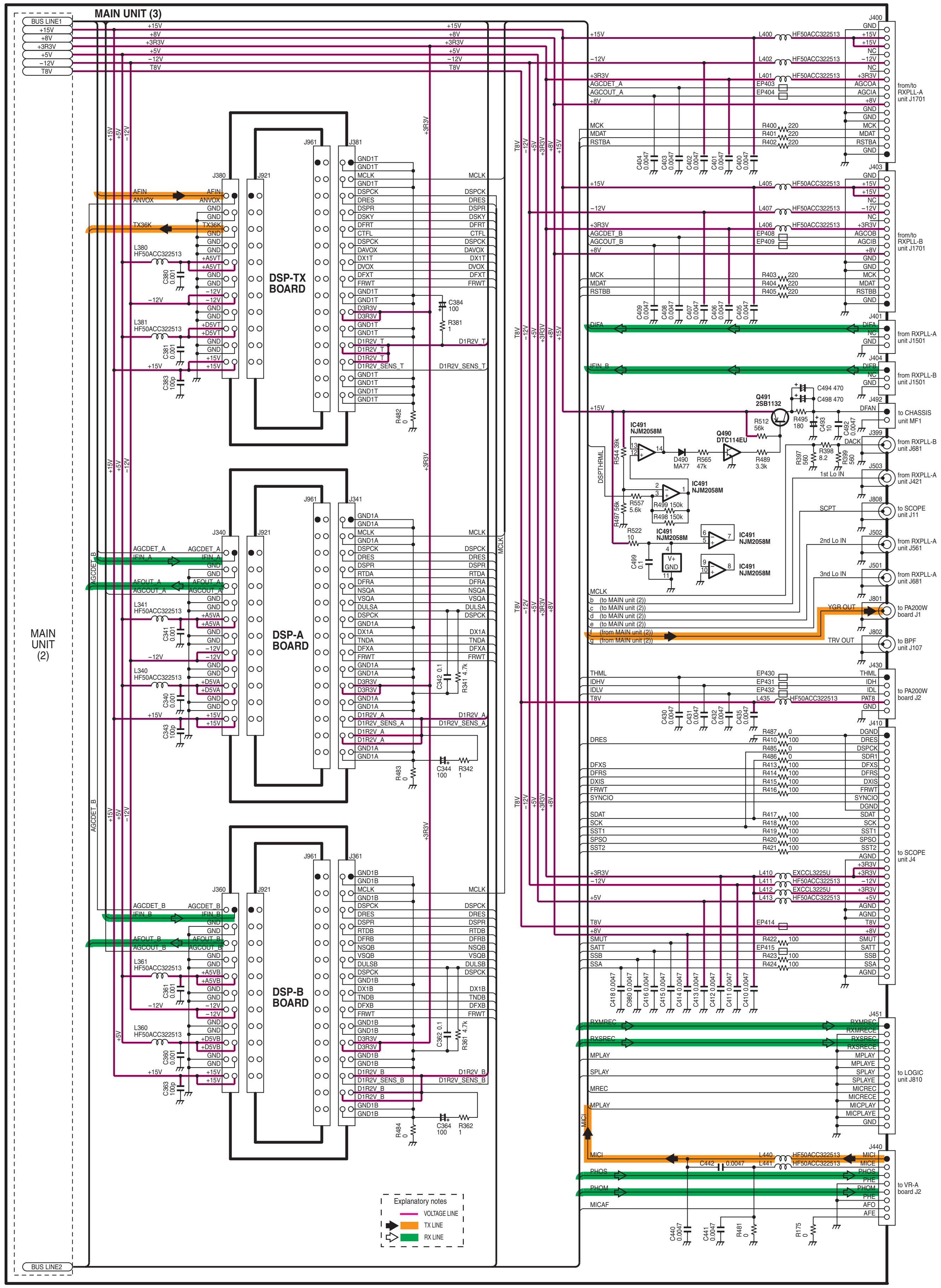
MAIN UNIT (3)
BUS LINE1
BUS LINE2
MAIN UNIT (2)
DSP-TX BOARD
DSP-A BOARD
DSP-B BOARD
J380
J921
J961
J381
J340
J341
J360
J361
J400
from/to RXPLL-A unit J1701
J403
from/to RXPLL-B unit J1701
J401
from RXPLL-A unit J1501
J404
from RXPLL-B unit J1501
J492
to CHASSIS unit MF1
J399
from RXPLL-B unit J681
J503
from RXPLL-A unit J421
J808
to SCOPE unit J11
J502
from RXPLL-A unit J561
J501
from RXPLL-A unit J681
J801
to PA200W board J1
J802
to BPF unit J107
J430
to PA200W board J2
J410
to SCOPE unit J4
J451
to LOGIC unit J810
J440
to VR-A board J2
IC491 NJM2058M
Q491 2SB1132
Q490 DTC114EU
D490 MA77
Explanatory notes
VOLTAGE LINE
TX LINE
RX LINE

# DSP-A/DSP-B BOARDS

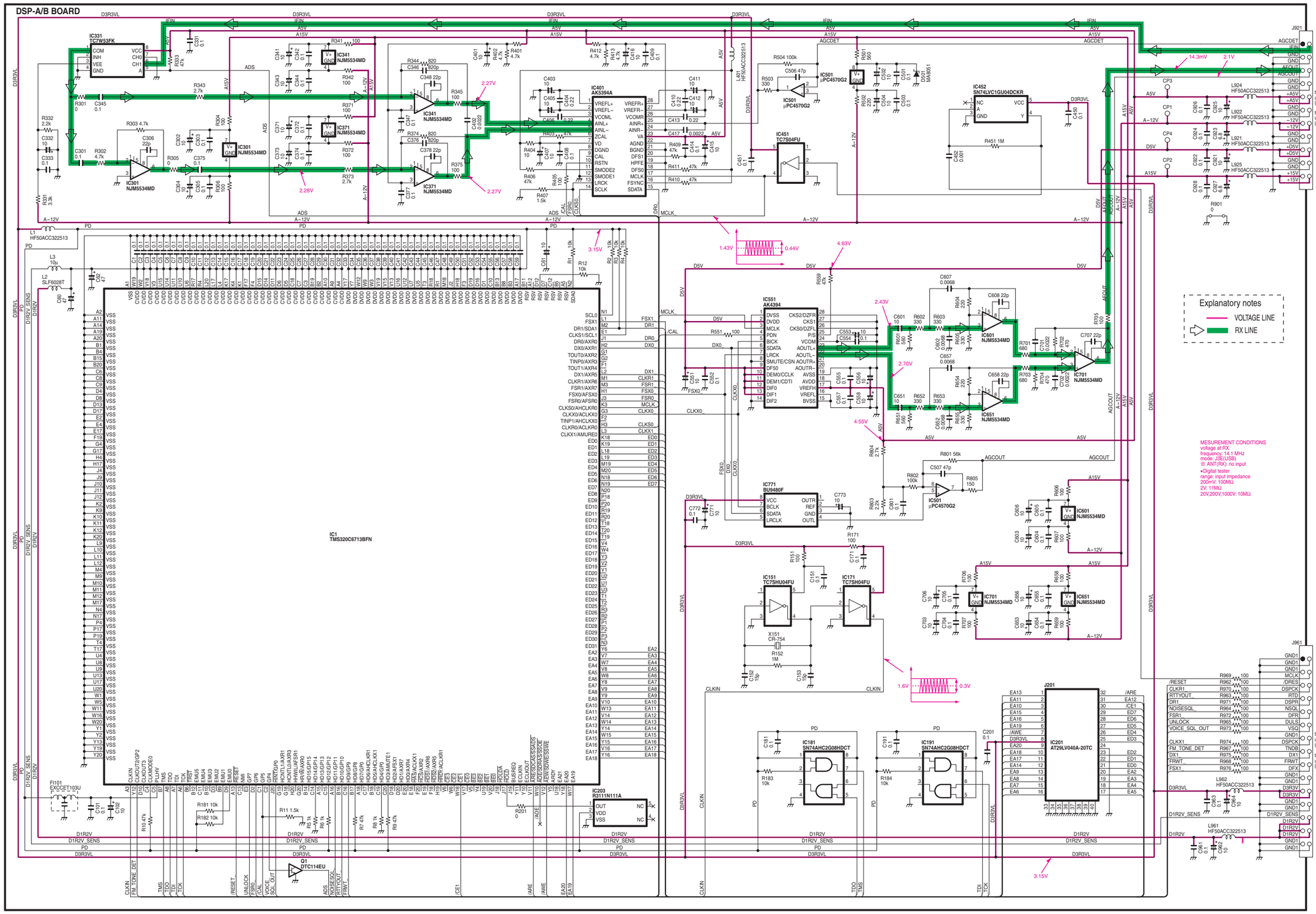

# DSP-TX BOARD

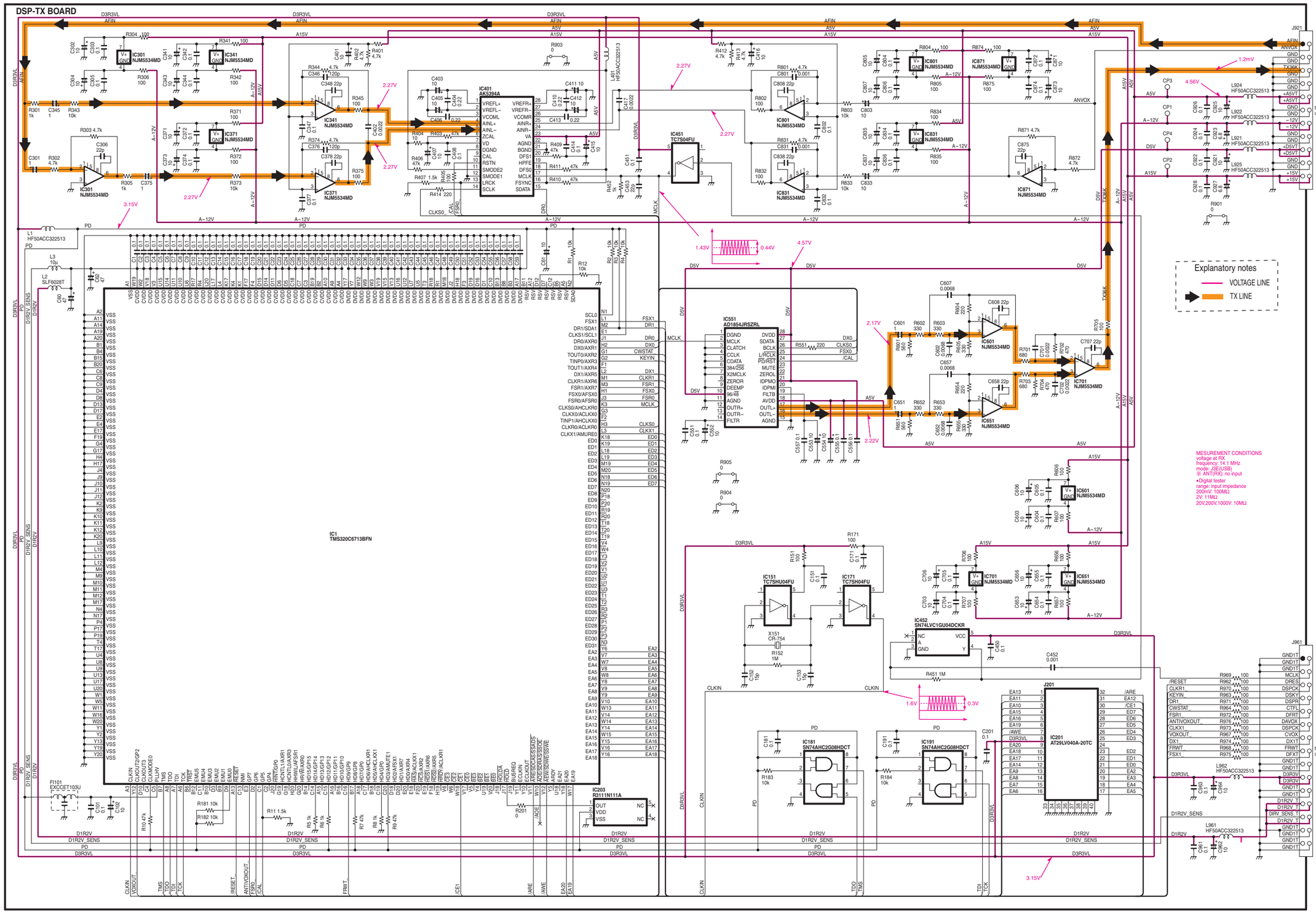
DSP-TX BOARD
IC1
TMS320C6713BFN
IC203
R3111N111A
IC301
NJM5534MD
IC341
NJM5534MD
IC371
NJM5534MD
IC401
AK5394A
IC451
TC7S04FU
IC801
NJM5534MD
IC831
NJM5534MD
IC871
NJM5534MD
IC601
NJM5534MD
IC651
NJM5534MD
IC701
NJM5534MD
IC551
AD1854JRSZRL
IC151
TC7SHU04FU
IC171
TC7SH04FU
IC452
SN74LVC1GU04DCKR
IC181
SN74AHC2G08HDCT
IC191
SN74AHC2G08HDCT
IC201
AT29LV040A-20TC
Explanatory notes
VOLTAGE LINE
TX LINE
MESUREMENT CONDITIONS
voltage at RX
frequency: 14.1 MHz
mode: J3E(USB)
※ ANT(RX): no input
•Digital tester
range: input impedance
200mV: 100MΩ
2V: 11MΩ
20V,200V,1000V: 10MΩ
to MAIN unit J380
to MAIN unit J381
1.2mV
4.56V
2.27V
3.15V
1.43V
0.44V
4.57V
2.17V
2.22V
1.6V
0.3V

# SCOPE UNIT

## SCOPE UNIT (1)

| | MAIN | SUB |
|---|---|---|
| A | 6.46V | 0.0V |
| B | 0.0V | 6.47V |
| C | 0.0V | 5.68V |
| D | 5.68V | 0.0V |
| E | 2.29V | 14.55V |
| F | 14.55V | 2.28V |

Explanatory notes
VOLTAGE LINE

MESUREMENT CONDITIONS
voltage at RX(no instruction)
frequency: 14.1 MHz
mode: J3E(USB)
※ ANT(RX): no input
(TX): no modulation
SCOPE ATT: 0dB
•Digital tester
range: input impedance
200mV: 100MΩ
2V, 11MΩ
20V,200V,1000V: 10MΩ

## SCOPE UNIT (2)

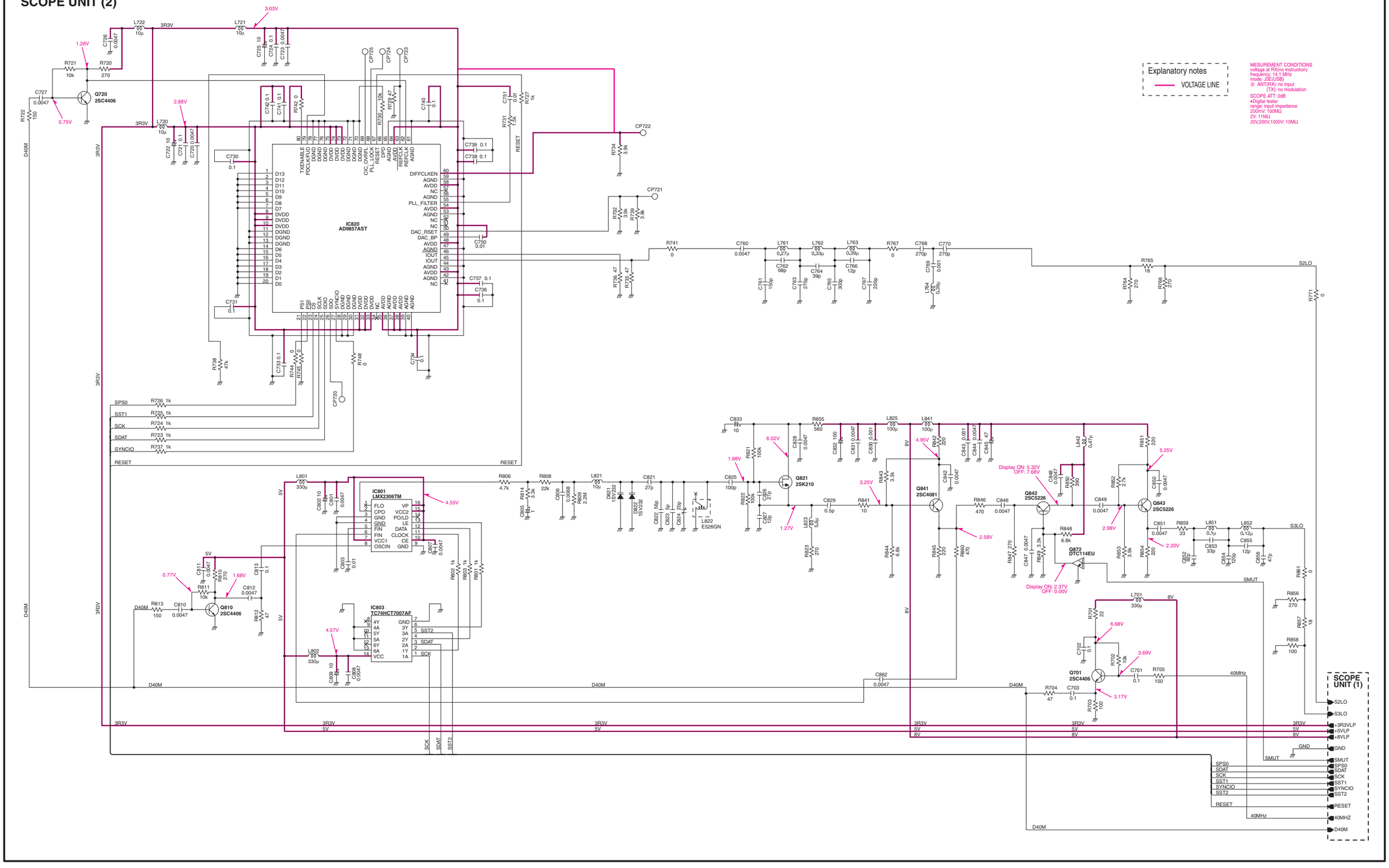
Explanatory notes
VOLTAGE LINE
MESUREMENT CONDITIONS
voltage at RX(no instruction)
frequency: 14.1 MHz
mode: J3E(USB)
※ ANT(RX): no input
(TX): no modulation
SCOPE ATT: 0dB
•Digital tester
range: input impedance
200mV: 100MΩ
2V: 11MΩ
20V,200V,1000V: 10MΩ
IC820
AD9857AST
IC801
LMX2306TM
IC803
TC74HCT7007AF
Q720
2SC4406
Q810
2SC4406
Q821
2SK210
Q841
2SC4081
Q842
2SC5226
Q843
2SC5226
Q872
DTC114EU
Q701
2SC4406
L822
E526GN
Display ON: 5.32V
OFF: 7.68V
Display ON: 2.37V
OFF: 0.00V
SCOPE UNIT (1)
S2LO
S3LO
+3R3VLP
+5VLP
+8VLP
GND
SMUT
SPS0
SDAT
SCK
SST1
SYNCIO
SST2
RESET
40MHZ
D40M
3R3V
5V
8V
40MHz

## SCOPE UNIT (3)

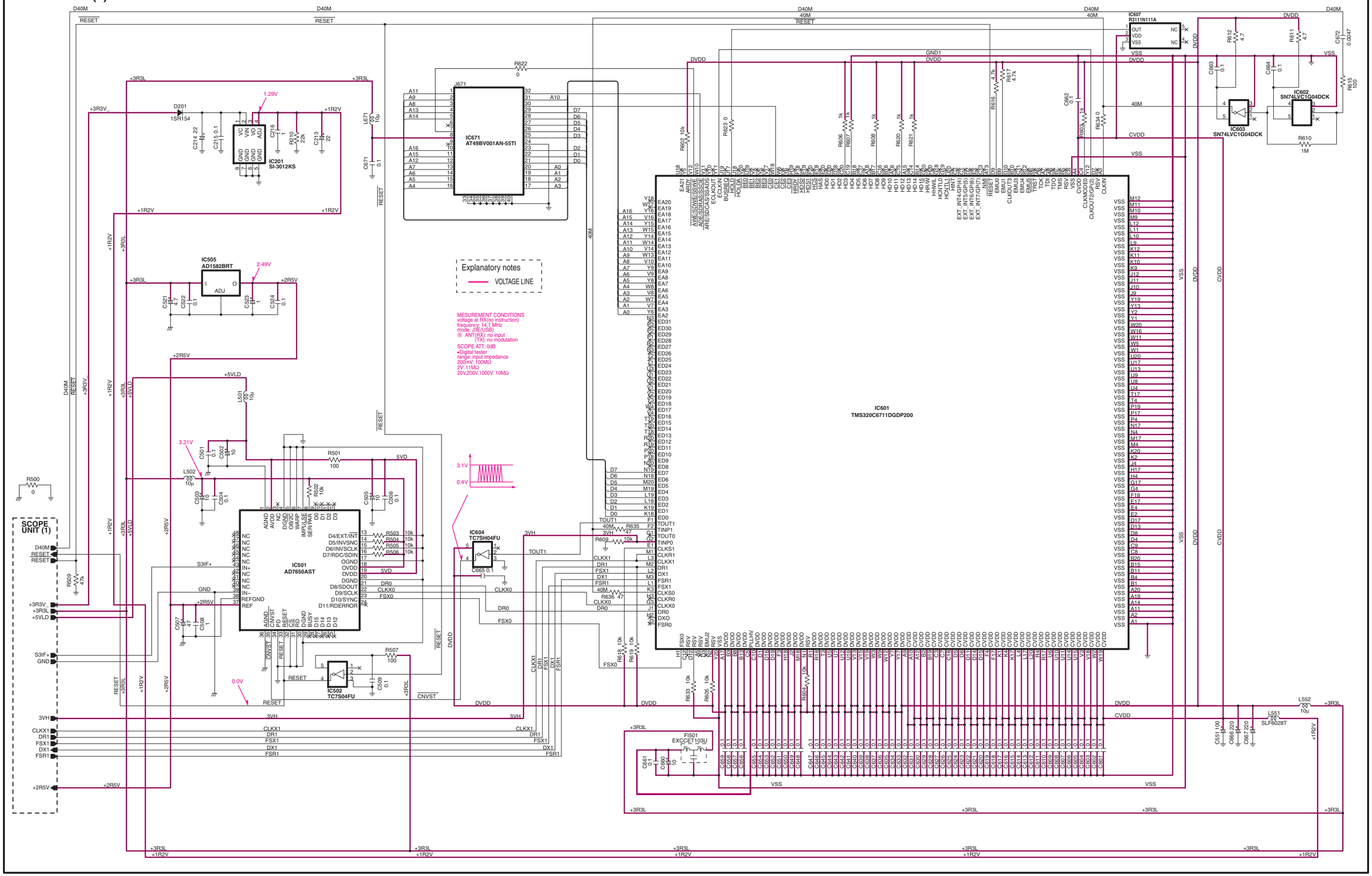

IC601
TMS320C6711DGDP200
IC671
AT49BV001AN-55TI
IC501
AD7650AST
IC505
AD1582BRT
IC201
SI-3012KS
IC502
TC7S04FU
IC604
TC7SH04FU
IC603
SN74LVC1G04DCK
IC602
SN74LVC1G04DCK
IC607
R3111N111A
FI501
EXCCET103U
SCOPE UNIT (1)
Explanatory notes
VOLTAGE LINE
MESUREMENT CONDITIONS
voltage at RX(no instruction)
frequency: 14.1 MHz
mode: J3E(USB)
※ ANT(RX): no input
(TX): no modulation
SCOPE ATT: 0dB
•Digital tester
range: input impedance
200mV: 100MΩ
2V: 11MΩ
20V,200V,1000V: 10MΩ

## SCOPE UNIT (4)

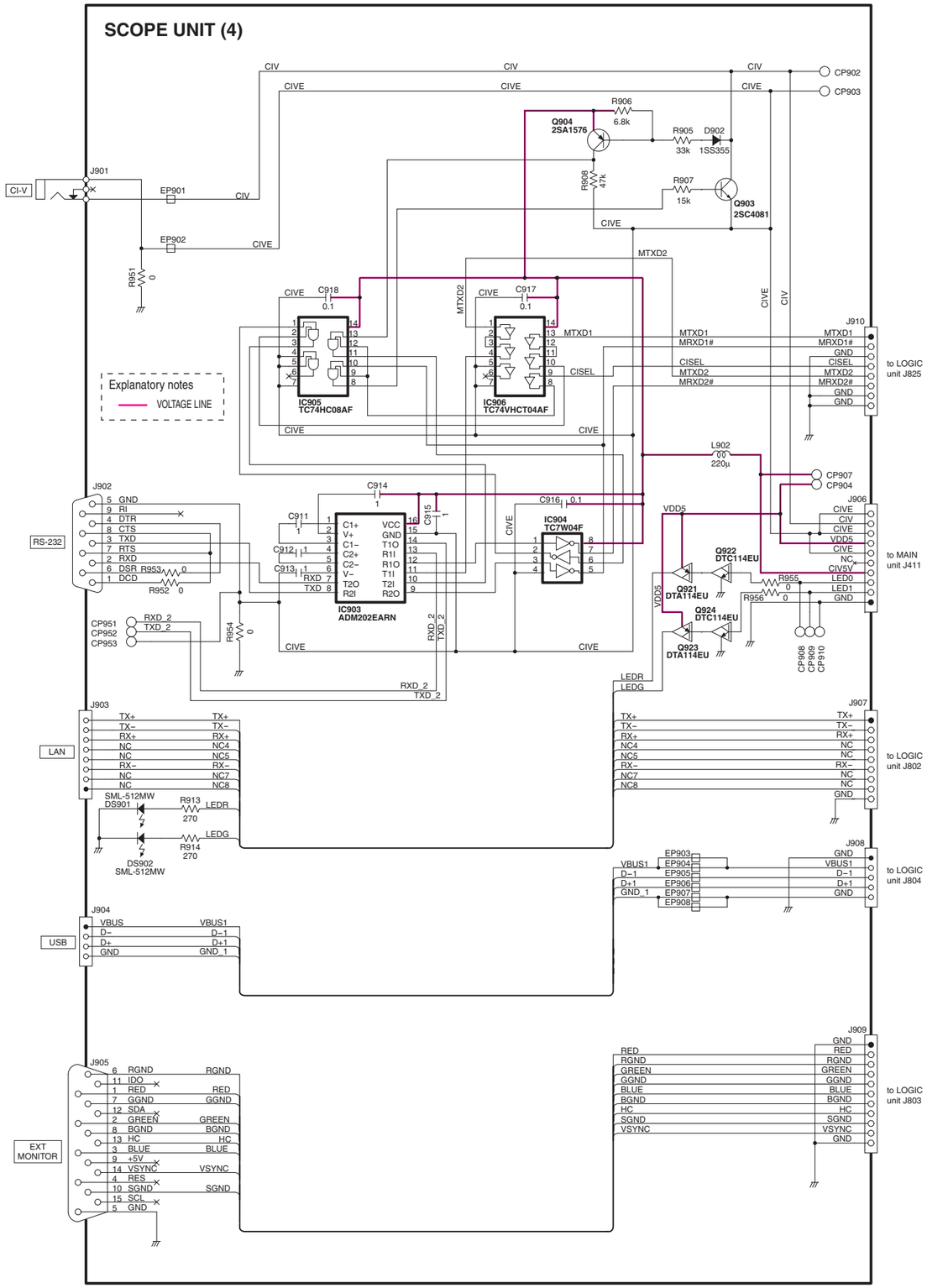
CI-V
J901
EP901
EP902
R951 0
CIV
CIVE
R906 6.8k
Q904 2SA1576
R905 33k
D902 1SS355
R908 47k
R907 15k
Q903 2SC4081
MTXD2
C918 0.1
C917 0.1
IC905 TC74HC08AF
IC906 TC74VHCT04AF
MTXD1
CISEL
MRXD1#
MTXD2
MRXD2#
J910
to LOGIC unit J825
CP902
CP903
Explanatory notes
VOLTAGE LINE
L902 220µ
CP907
CP904
J906
to MAIN unit J411
VDD5
Q921 DTA114EU
Q922 DTC114EU
Q923 DTA114EU
Q924 DTC114EU
R955 0
R956 0
LED0
LED1
CP908
CP909
CP910
J902
RS-232
R952 0
R953 0
C914 1
C915 1
C916 0.1
C911 1
C912 1
C913 1
IC903 ADM202EARN
IC904 TC7W04F
RXD
TXD
RXD_2
TXD_2
CP951
CP952
CP953
R954 0
LEDR
LEDG
J903
LAN
SML-512MW DS901
DS902 SML-512MW
R913 270
R914 270
J907
to LOGIC unit J802
J908
to LOGIC unit J804
EP903
EP904
EP905
EP906
EP907
EP908
VBUS1
D-1
D+1
GND_1
J904
USB
J909
to LOGIC unit J803
J905
EXT MONITOR
RED
RGND
GREEN
GGND
BLUE
BGND
HC
SGND
VSYNC
GND
TX+
TX-
RX+
RX-
NC
NC4
NC5
NC7
NC8

# RXPLL-A/RXPLL-B UNITS

## RXPLL-A/B UNIT (1)

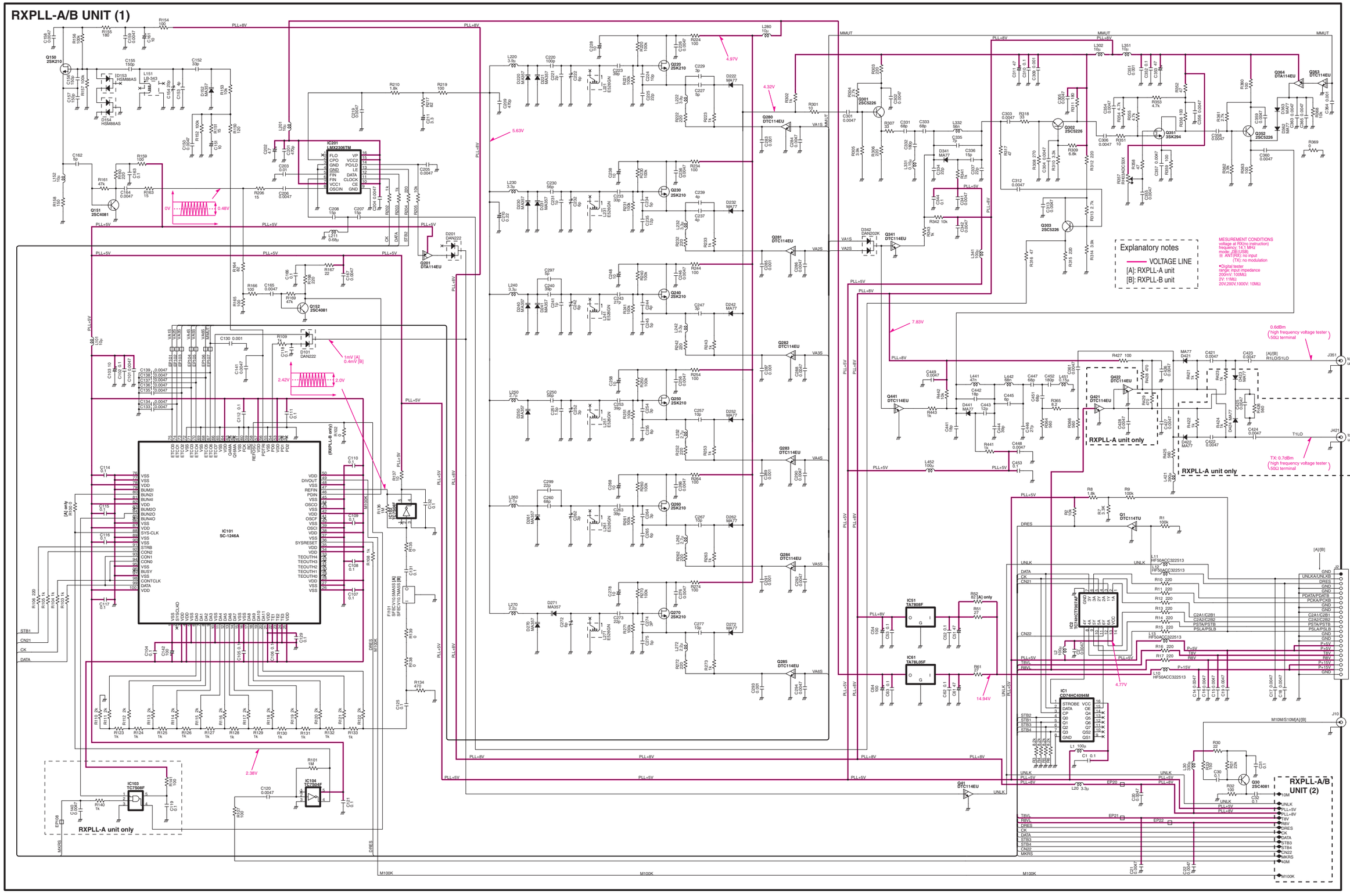

## RXPLL-A/B UNIT (2)

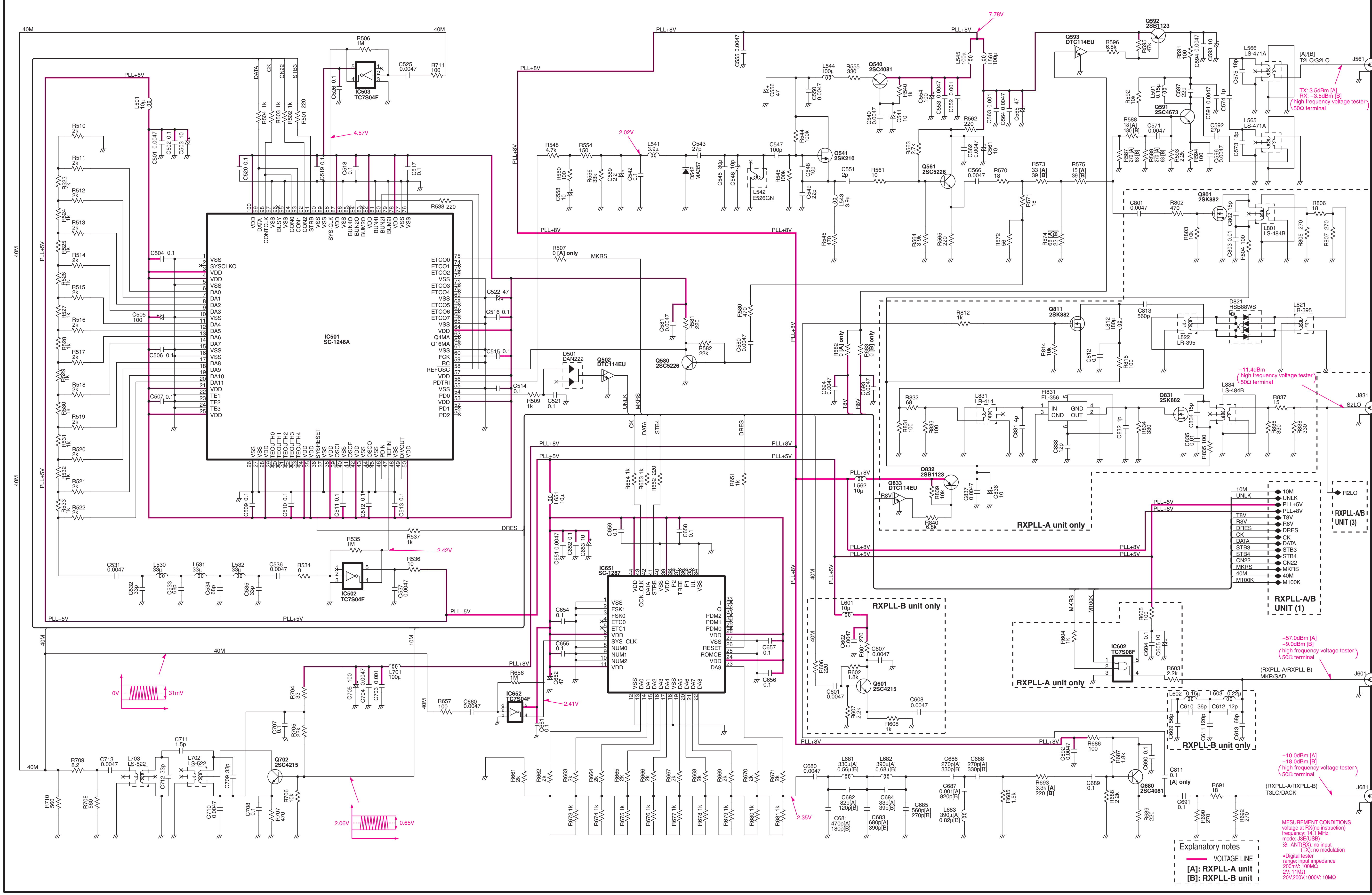

# RXPLL-A/B UNIT (3)

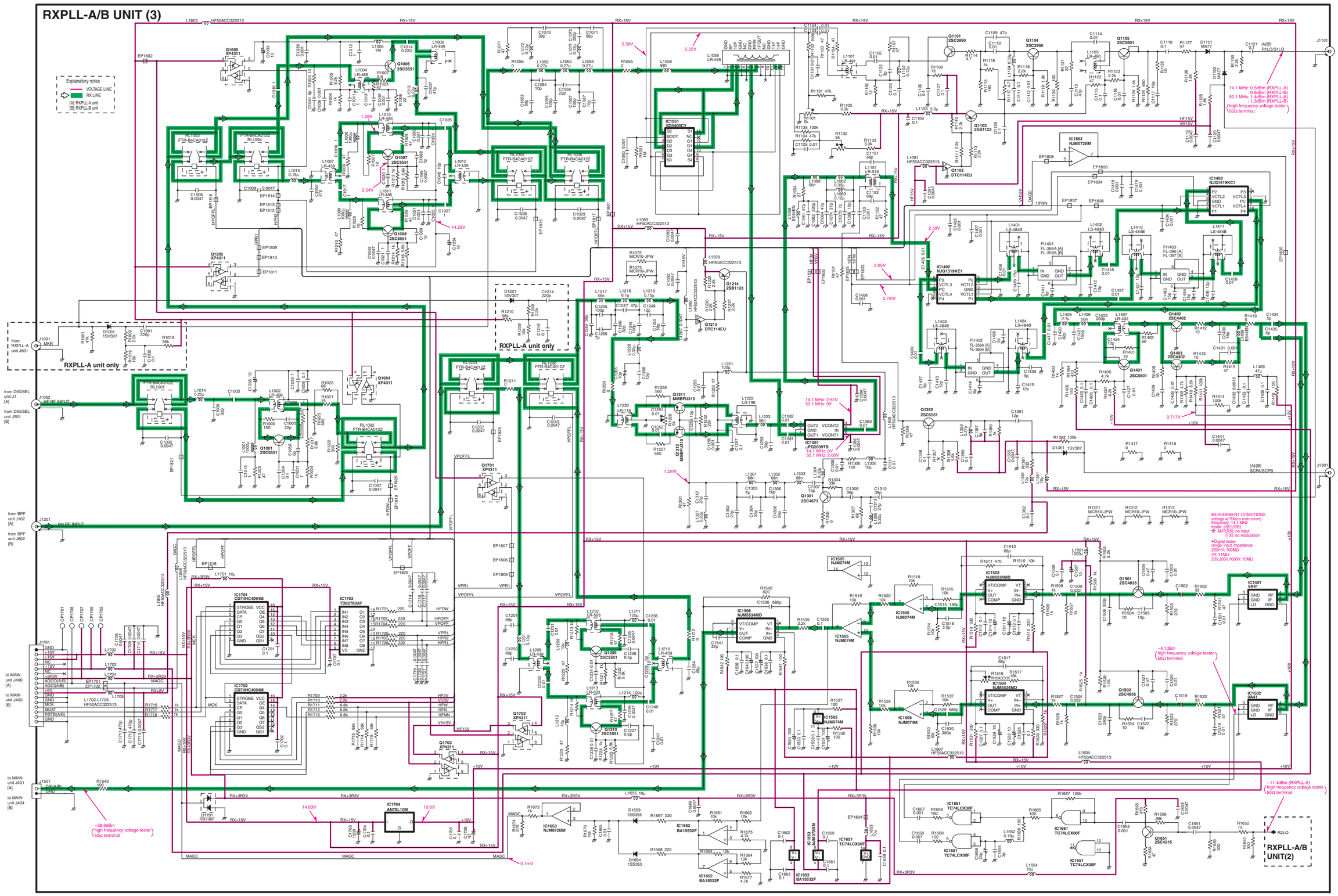

# DIGISEL UNIT

## DIGISEL UNIT (A)

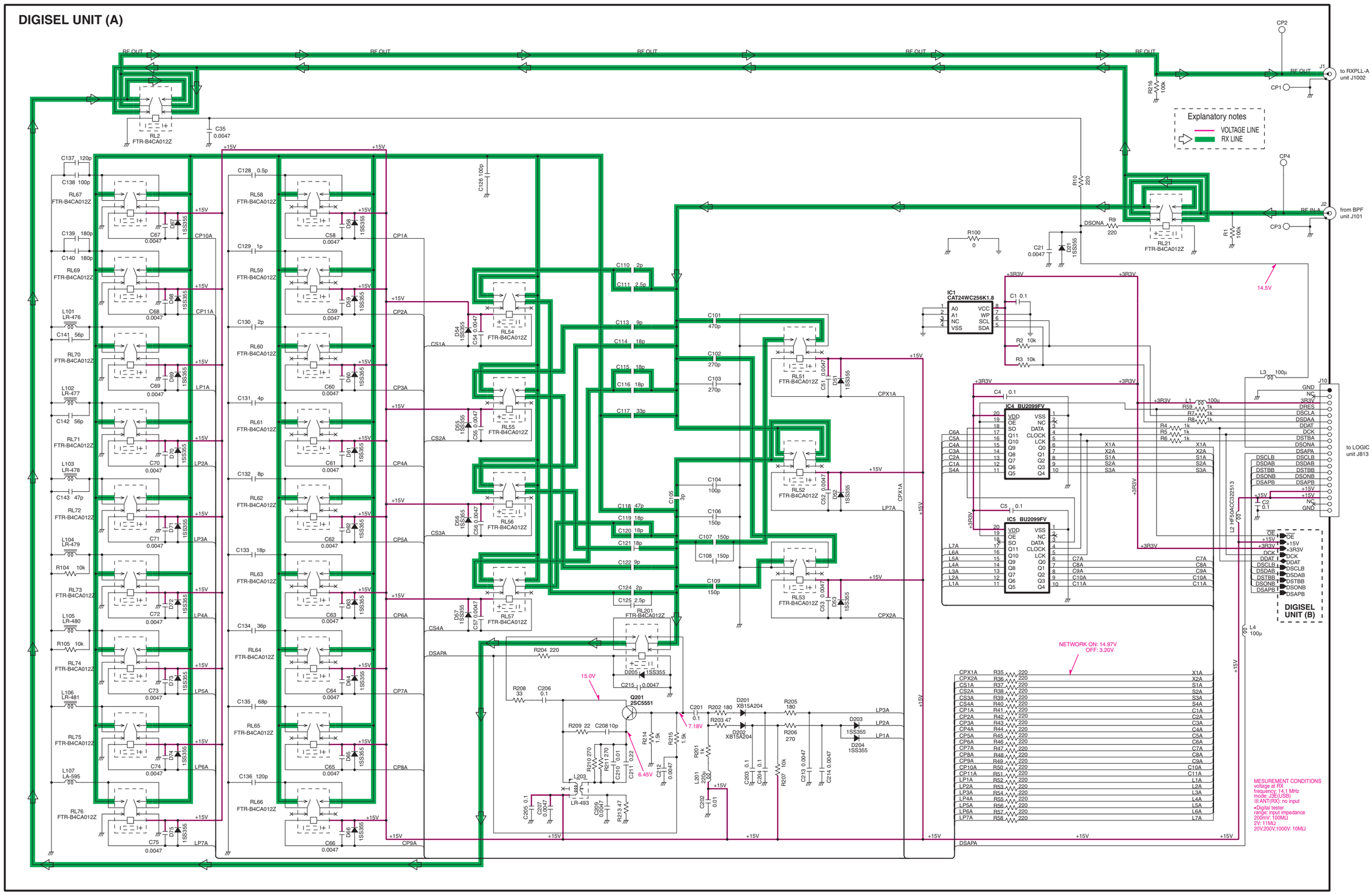

## DIGISEL UNIT (B)

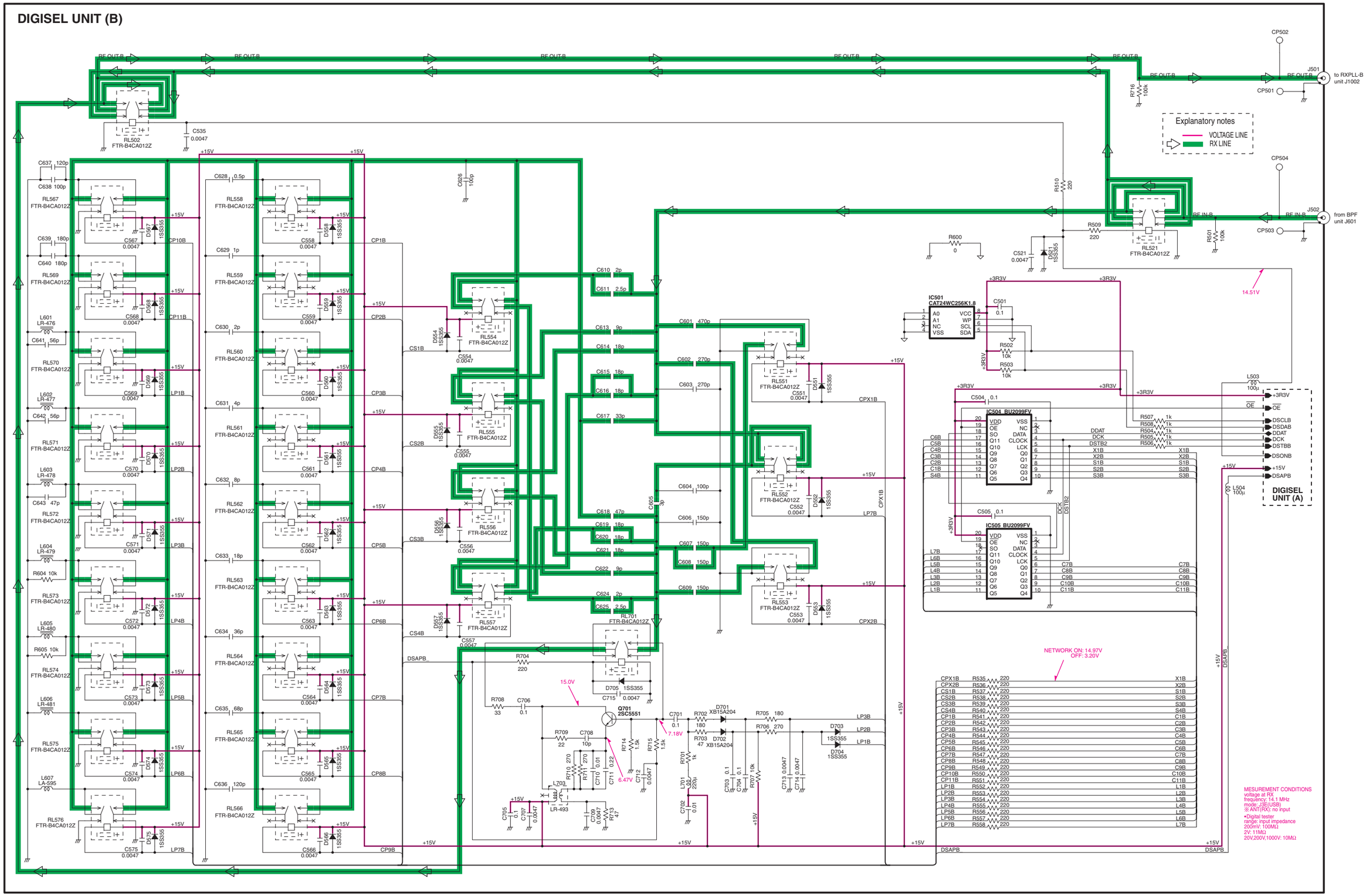

# OSC UNIT

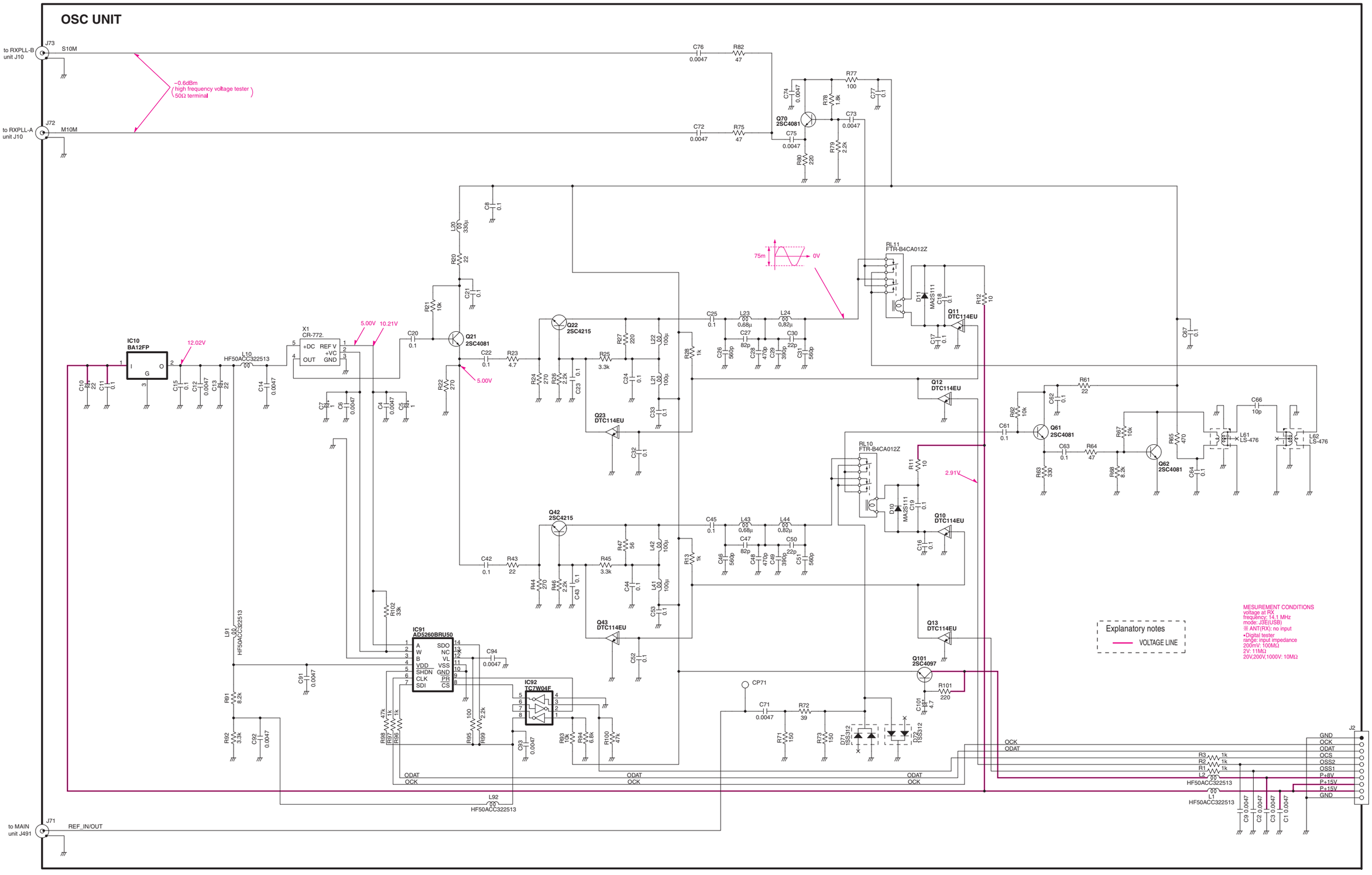
OSC UNIT
to RXPLL-B unit J10
J73
S10M
~0.6dBm
(high frequency voltage tester
50Ω terminal)
to RXPLL-A unit J10
J72
M10M
C76 0.0047
R82 47
C72 0.0047
R75 47
Q70 2SC4081
C74 0.0047
R78 1.8k
R77 100
C77 0.1
C73 0.0047
C75 0.0047
R79 2.2k
R80 220
C8 0.1
L20 330µ
R20 22
C21 0.1
R21 10k
75m
0V
RL11 FTR-B4CA012Z
D11 MA2S111
C18 0.1
R12 10
C17 0.1
Q11 DTC114EU
C67 0.1
IC10 BA12FP
12.02V
L10 HF50ACC322513
X1 CR-772.
5.00V
10.21V
C20 0.1
Q21 2SC4081
C22 0.1
R23 4.7
Q22 2SC4215
R25 3.3k
R27 220
L22 100µ
R28 1k
C25 0.1
L23 0.68µ
L24 0.82µ
C27 820p
C26 560p
C28 470p
C29 390p
C30 22p
C31 560p
5.00V
R22 270
R24 270
R26 2.2k
C24 0.1
L21 100µ
C23 0.1
C33 0.1
Q23 DTC114EU
C32 0.1
Q12 DTC114EU
R61 22
C62 0.1
R62 10k
C61 0.1
Q61 2SC4081
C63 0.1
R64 47
R63 330
R67 10k
R65 470
R68 6.8k
Q62 2SC4081
C64 0.1
C66 10p
L61 LS-476
L62 LS-476
RL10 FTR-B4CA012Z
2.91V
R11 10
D10 MA2S111
C19 0.1
Q10 DTC114EU
C16 0.1
Q42 2SC4215
C42 0.1
R43 22
R45 3.3k
R47 56
L42 100µ
R13 1k
C45 0.1
L43 0.68µ
L44 0.82µ
C47 82p
C46 560p
C48 470p
C49 390p
C50 22p
C51 560p
R44 270
R46 2.2k
C44 0.1
C43 0.1
L41 100µ
C53 0.1
Q43 DTC114EU
C52 0.1
Q13 DTC114EU
R102 33k
L91 HF50ACC322513
IC91 AD5260BRU50
C94 0.0047
C91 0.0047
R91 8.2k
R92 3.3k
C92 0.0047
IC92 TC7W04F
R98 47k
R97 1k
R96 1k
R95 100
R99 2.2k
C93 0.0047
R93 10k
R94 6.8k
R100 47k
Q101 2SC4097
R101 220
C101 4.7
CP71
C71 0.0047
R72 39
R71 150
R73 150
D71 1SS312
D72 1SS312
ODAT
OCK
L92 HF50ACC322513
J71
to MAIN unit J491
REF_IN/OUT
OCK
ODAT
R3 1k
R2 1k
R1 1k
L2 HF50ACC322513
L1 HF50ACC322513
C9 0.0047
C2 0.0047
C3 0.0047
C1 0.0047
J2
GND
OCK
ODAT
OCS
OSS2
OSS1
P+8V
P+15V
P-15V
GND
to LOGIC unit J814
Explanatory notes
VOLTAGE LINE
MESUREMENT CONDITIONS
voltage at RX
frequency: 14.1 MHz
mode: J3E(USB)
※ ANT(RX): no input
•Digital tester
range: input impedance
200mV: 100MΩ
2V: 11MΩ
20V,200V,1000V: 10MΩ

# ANT-SW UNIT

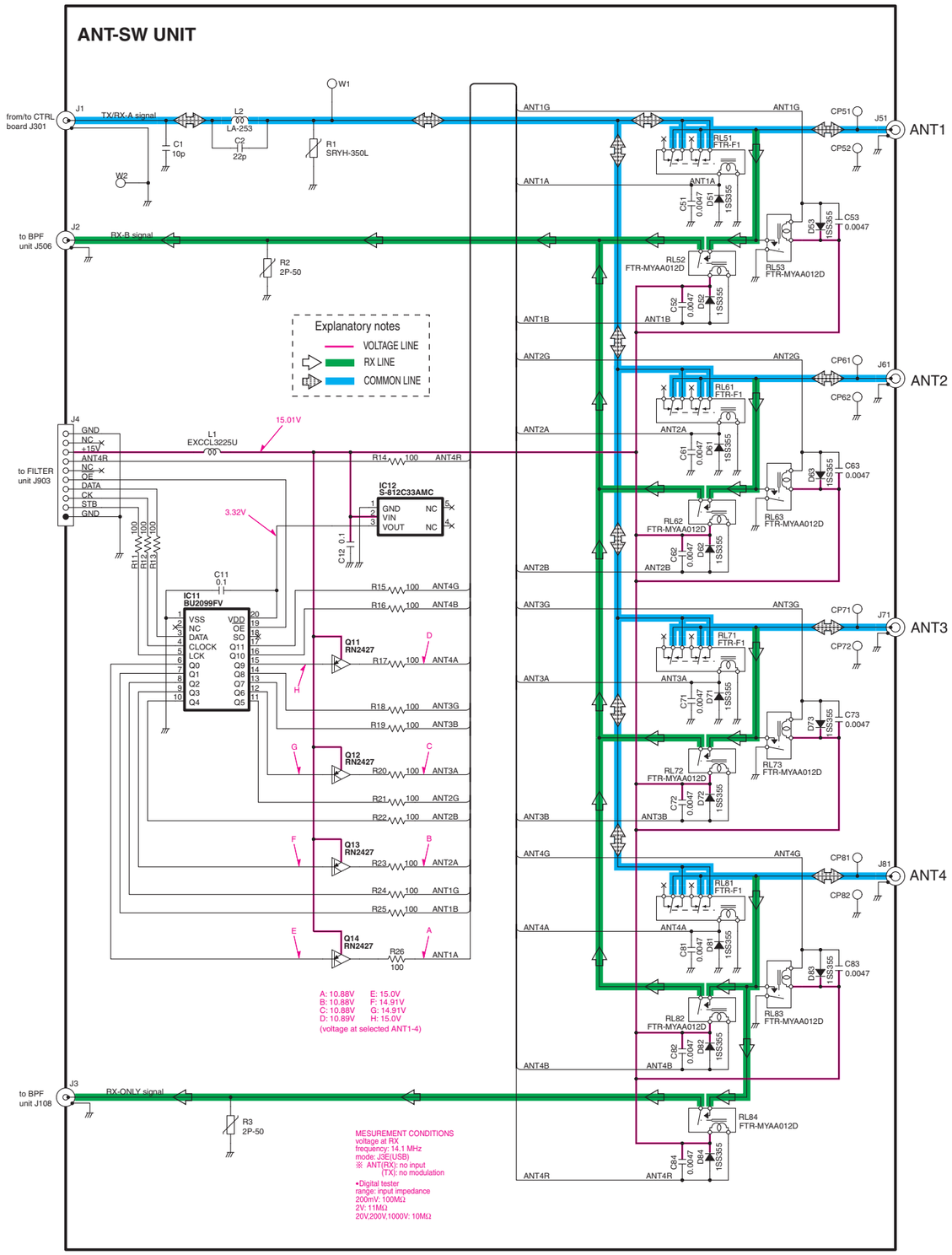


# FILTER UNIT

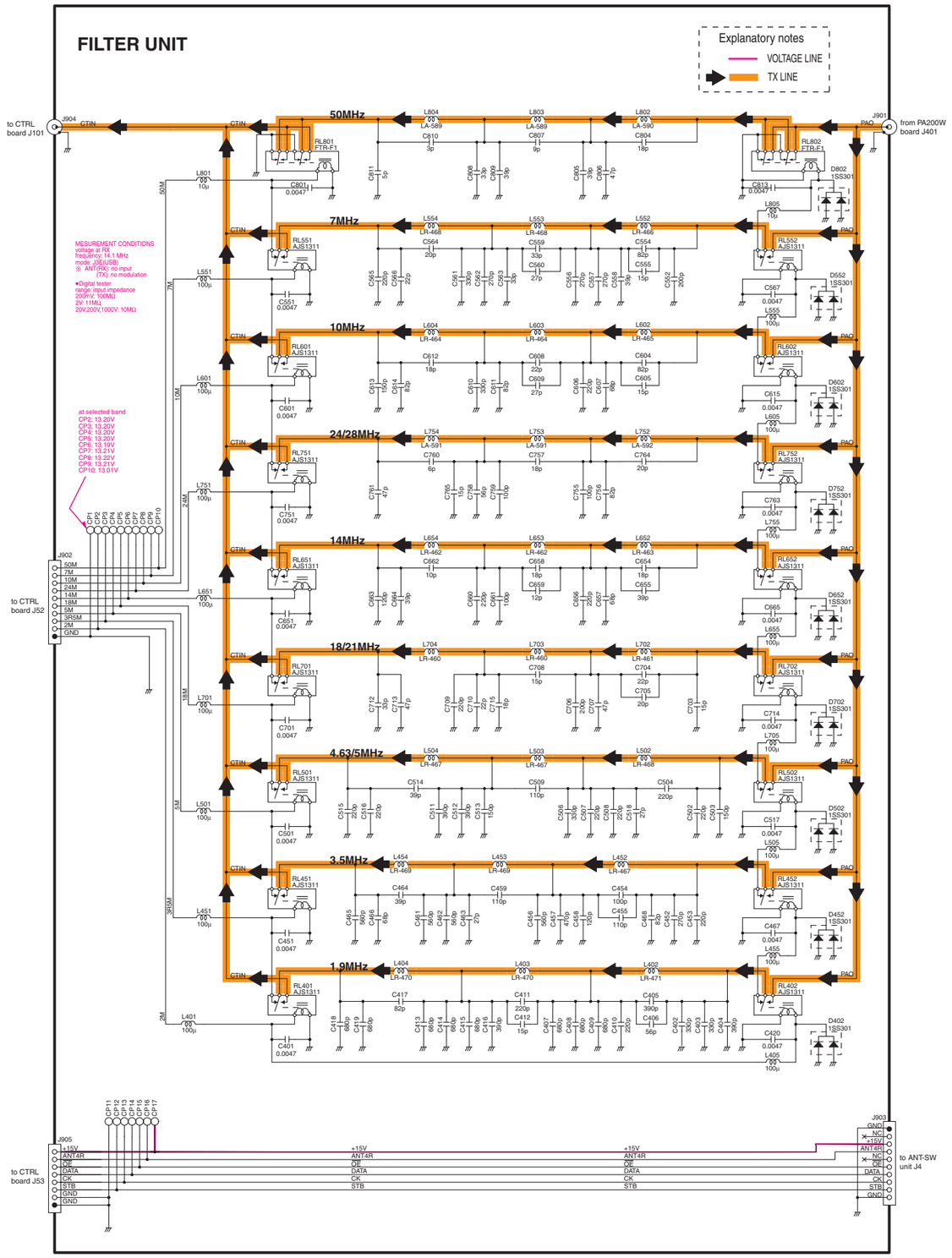

# BPF UNIT

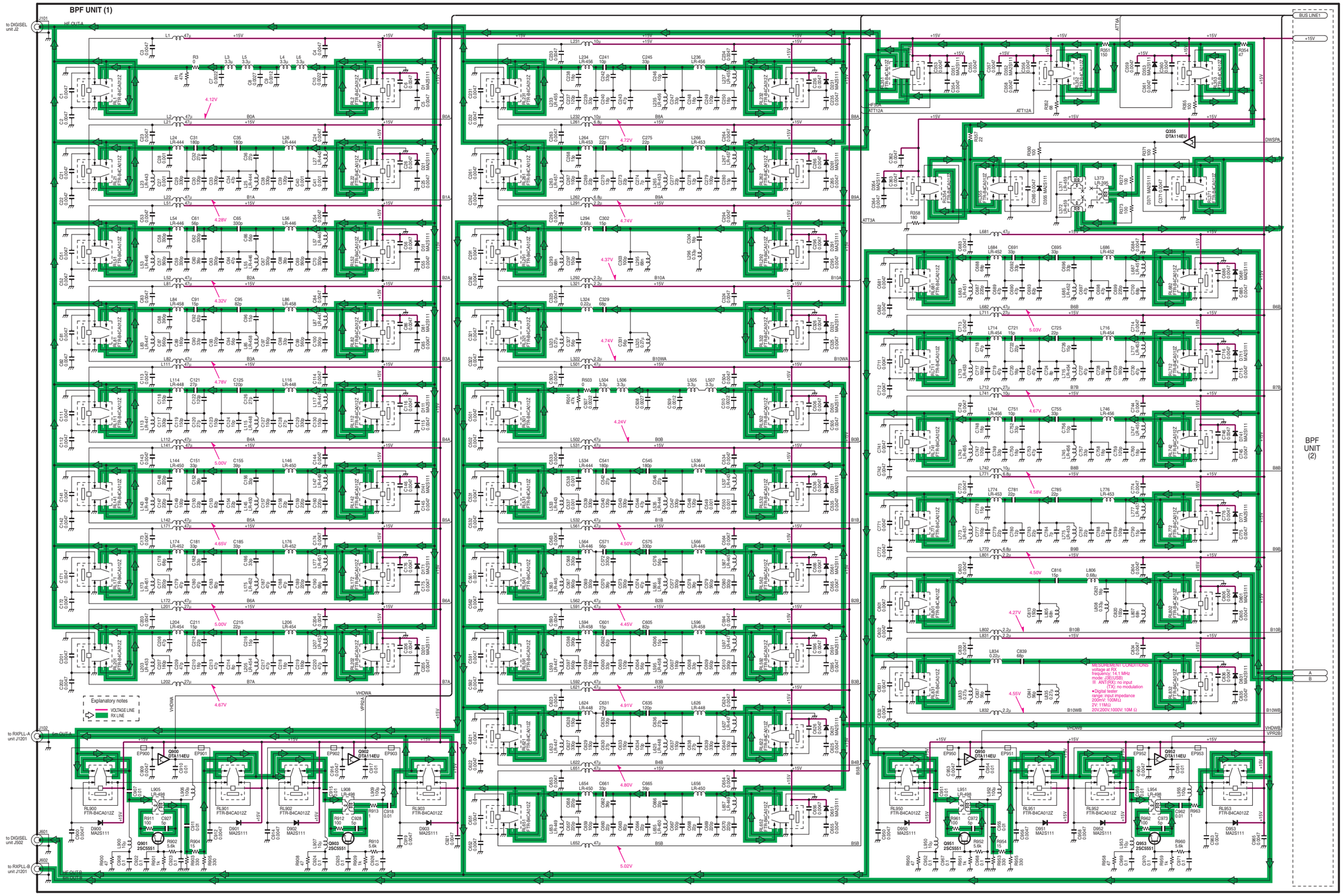
BPF UNIT (1)
BPF UNIT (2)
BUS LINE1
Explanatory notes
VOLTAGE LINE
RX LINE
MESUREMENT CONDITIONS
voltage at RX
frequency: 14.1 MHz
mode: J3E(USB)
※ ANT(RX): no input
(TX): no modulation
• Digital tester
range: input impedance
200mV: 100MΩ
2V: 11MΩ
20V,200V,1000V: 10M Ω

# NETWORK BOARD

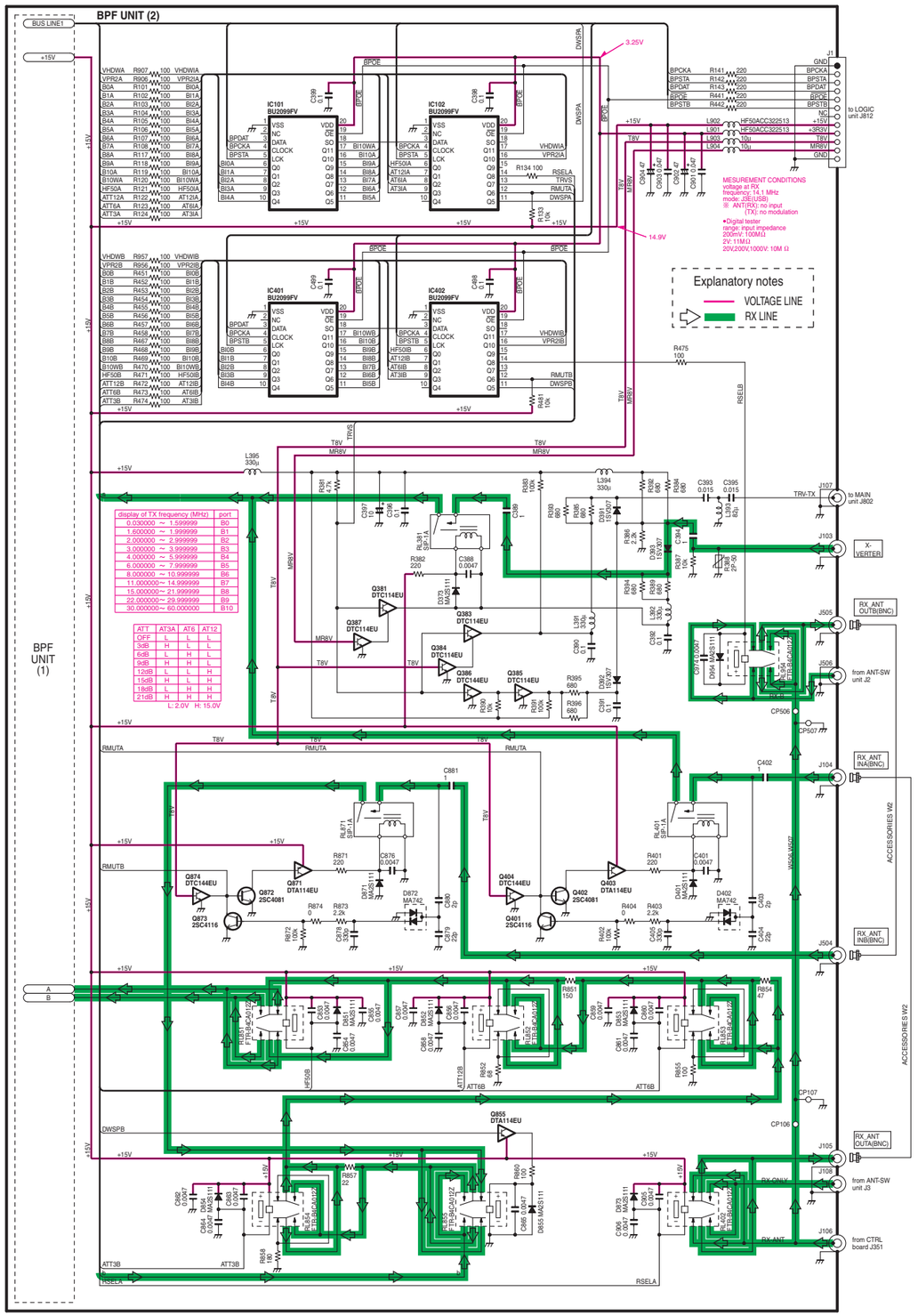


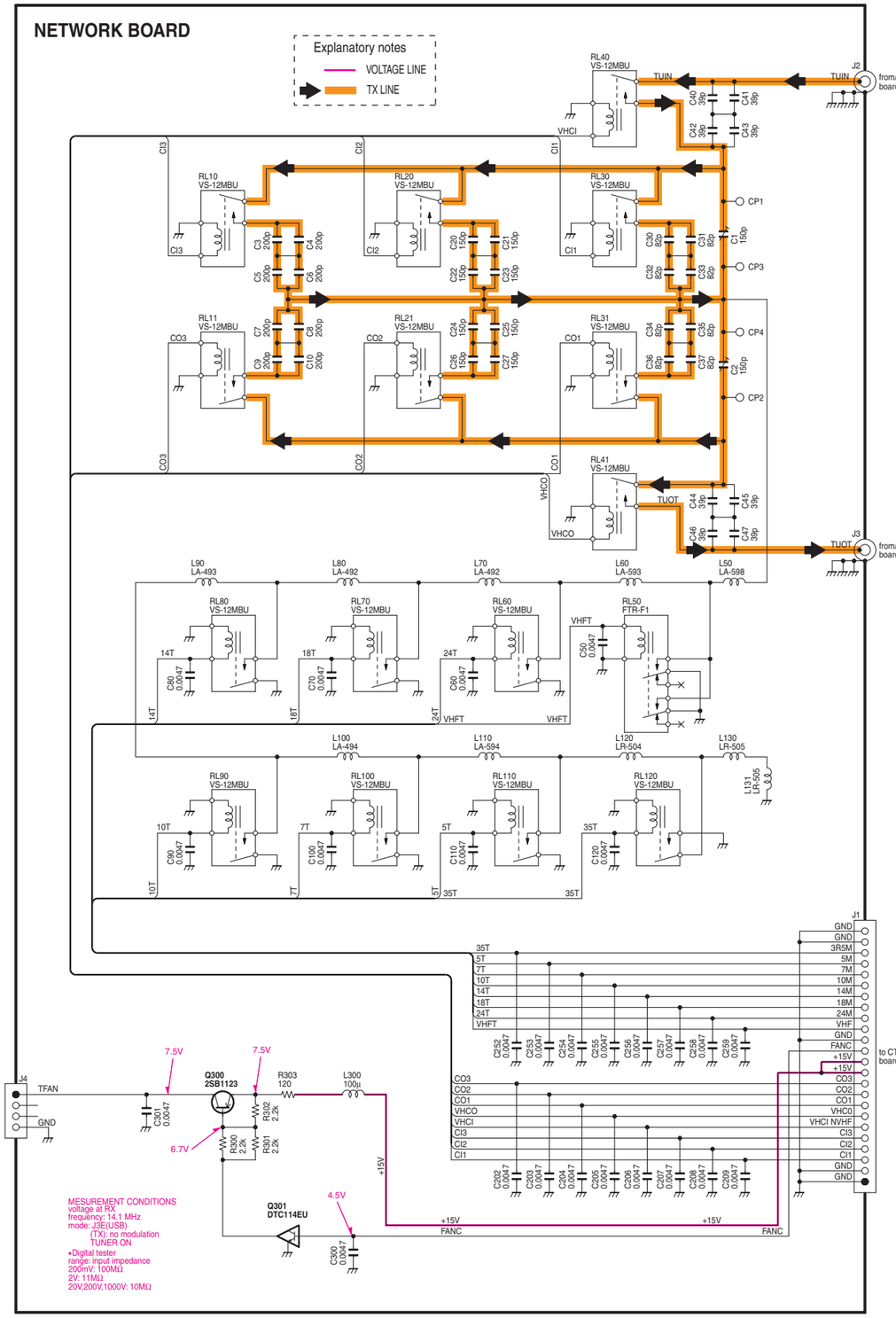

# CTRL BOARD

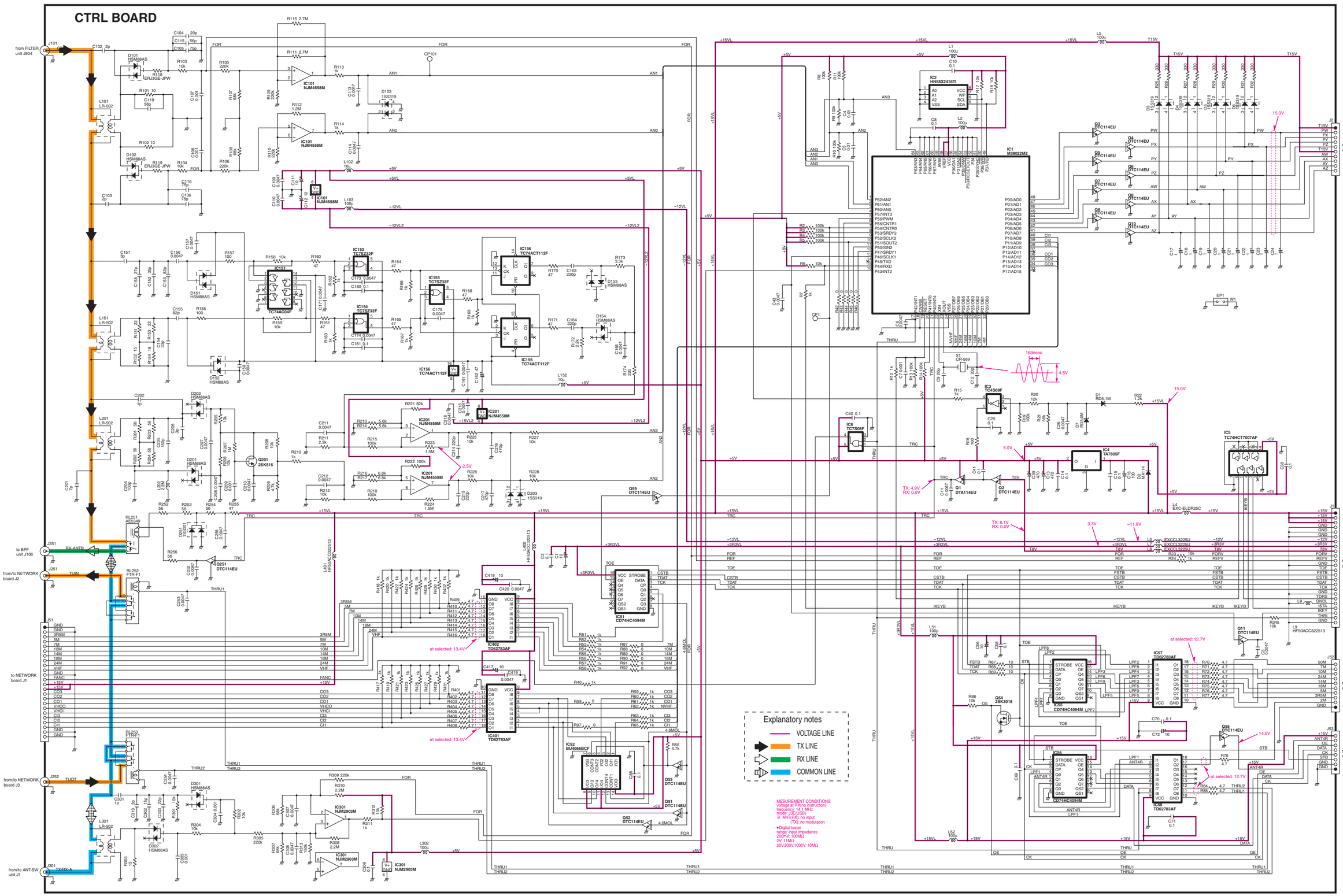
CTRL BOARD
Explanatory notes
VOLTAGE LINE
TX LINE
RX LINE
COMMON LINE
MESUREMENT CONDITIONS
voltage at RX(no instruction)
frequency: 14.1 MHz
mode: J3E(USB)
※ ANT(RX): no input
(TX): no modulation
•Digital tester
range: input impedance
200mV: 100MΩ
2V: 11MΩ
20V,200V,1000V: 10MΩ
from FILTER unit J904
to BPF unit J106
from/to NETWORK board J2
to NETWORK board J1
from/to NETWORK board J3
from/to ANT-SW unit J1
to TUNER unit MF1,MF2
to LOGIC unit J811
to FILTER unit J902
to FILTER unit J905
IC1 M38022M2
IC2 HN58X2416TI
IC3 TC4S69F
IC4 TA7805F
IC5 TC74HCT7007AF
IC6 TC7S08F
IC101 NJM4558M
IC151 TC74AC04F
IC153 TC7SZ32F
IC154 TC7SZ32F
IC155 TC7SZ32F
IC156 TC74ACT112F
IC201 NJM4558M
IC301 NJM2903M
IC401 TD62783AF
IC402 TD62783AF
IC51 CD74HC4094M
IC52 BU4066BCF
IC55 CD74HC4094M
IC56 CD74HC4094M
IC57 TD62783AF
IC58 TD62783AF
Q201 2SK515
Q251 DTC114EU
Q59 DTC114EU
Q53 DTC114EU
Q51 DTC114EU
Q52 DTC114EU
Q54 2SK3018
Q55 DTC114EU
Q11 DTC114EU
Q1 DTA114EU
Q2 DTC114EU
Q3 DTC114EU
Q4 DTC114EU
Q5 DTC114EU
Q6 DTC114EU
Q7 DTC114EU
Q8 DTC114EU
Q9 DTC114EU
Q10 DTC114EU
Q11 DTC114EU
163nsec
4.5V
15.0V
5.0V
2.5V
14.5V
at selected: 13.4V
at selected: 12.7V
TX: 4.9V
RX: 0.0V
TX: 8.1V
RX: 0.0V
3.3V
−11.8V
15.0V

# PA200W BOARD

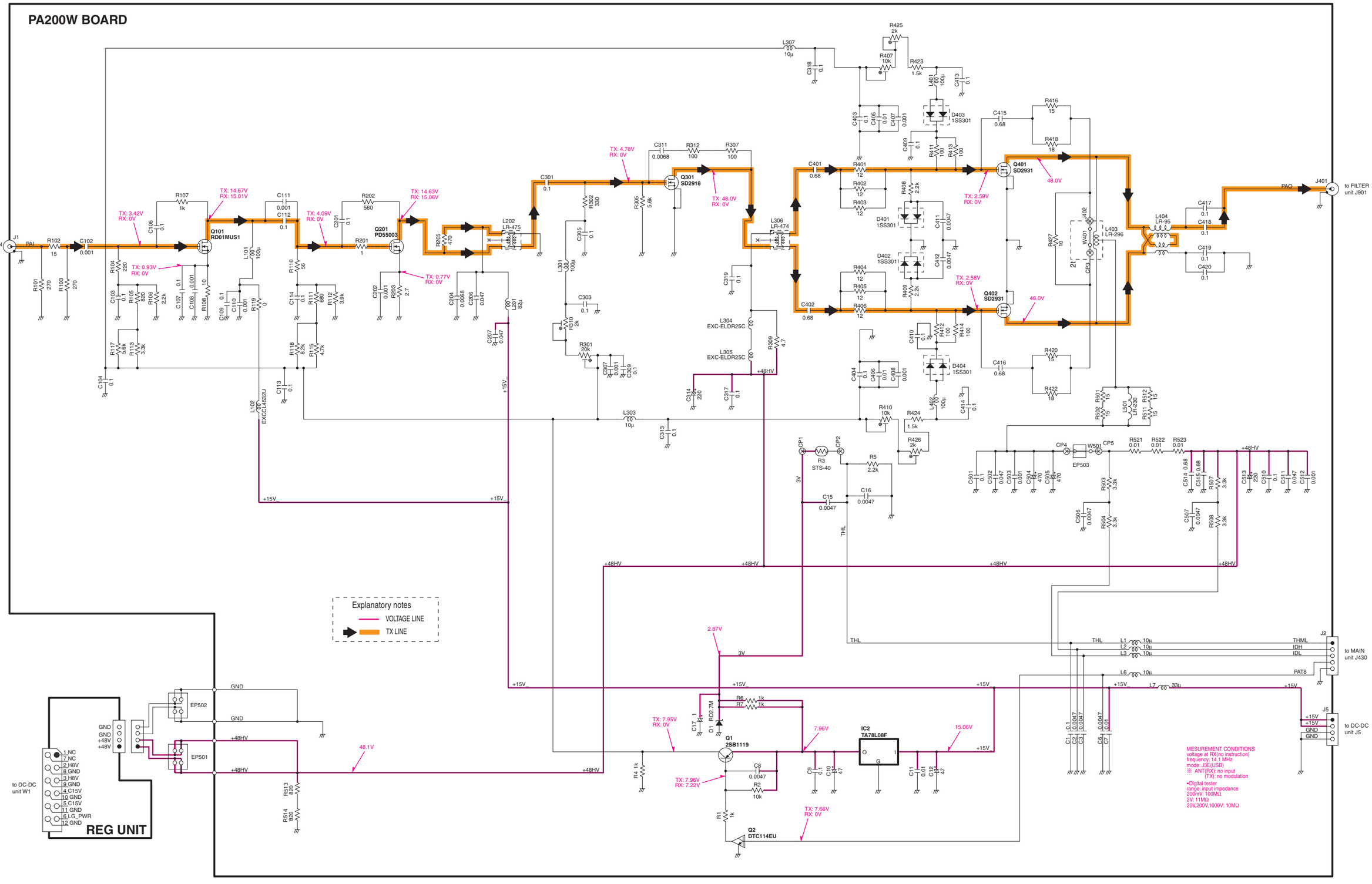

# DC-DC UNIT

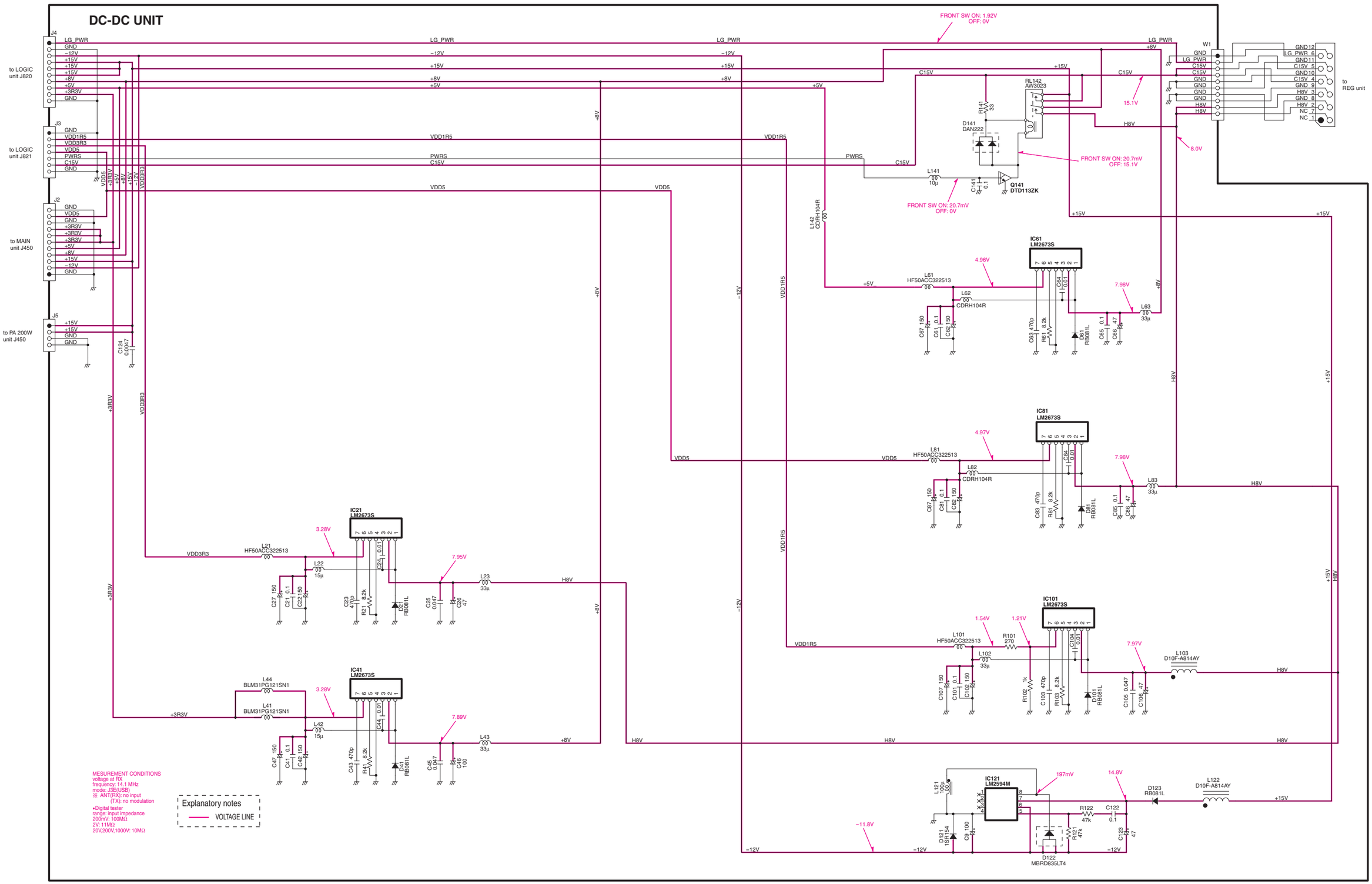
DC-DC UNIT
J4
J3
J2
J5
to LOGIC unit J820
to LOGIC unit J821
to MAIN unit J450
to PA 200W unit J450
W1
to REG unit
FRONT SW ON: 1.92V OFF: 0V
FRONT SW ON: 20.7mV OFF: 15.1V
FRONT SW ON: 20.7mV OFF: 0V
RL142 AW3023
D141 DAN222
Q141 DTD113ZK
IC61 LM2673S
IC81 LM2673S
IC21 LM2673S
IC41 LM2673S
IC101 LM2673S
IC121 LM2594M
D122 MBRD835LT4
D123 RB081L
L122 D10F-A814AY
L103 D10F-A814AY
MESUREMENT CONDITIONS
voltage at RX
frequency: 14.1 MHz
mode: J3E(USB)
※ ANT(RX): no input
(TX): no modulation
•Digital tester
range: input impedance
200mV: 100MΩ
2V: 11MΩ
20V,200V,1000V: 10MΩ
Explanatory notes
VOLTAGE LINE

ICOM

# SERVICE MANUAL

THE TRANSCEIVER

# IC-7800

S-14015HZ-C1-②
Mar. 2006

Icom Inc.

## INTRODUCTION

This service manual describes the latest service information for the **IC-7800** THE TRANSCEIVER at the time of publication (include FCC and R&TTE versions).

| MODEL | SYMBOL | VERSION |
|---|---|---|
| IC-7800 | USA | U.S.A. |
| | EUR | Europe |
| | FRA | France |
| | ITR | Italy |
| | KOR | Korea |
| | ESP | Spain |
| | UK | United Kingdom |

To upgrade quality, any electrical or mechanical parts and internal circuits are subject to change without notice or obligation.

## DANGER

**NEVER** connect the transceiver to an DC power supply or to an AC outlet that uses more than 265 V. This will ruin the transceiver.

**DO NOT** expose the transceiver to rain, snow or any liquids.

**DO NOT** apply an RF signal of more than 20 dBm (100 mW) to the antenna connector. This could damage the transceiver's front end.

## ORDERING PARTS

Be sure to include the following four points when ordering replacement parts:

1. 10-digit order numbers
2. Component part number and name
3. Equipment model name and unit name
4. Quantity required

**<SAMPLE ORDER>**

| | | | | | |
|---|---|---|---|---|---|
| 1110003870 | S.IC | NJM2058M | IC-7800 | MAIN UNIT | 5 pieces |
| 8810008450 | Screw | BiH M4×8 ZK | IC-7800 | Top cover | 10 pieces |

Addresses are provided on the inside back cover for your convenience.

## REPAIR NOTES

1. Make sure a problem is internal before disassembling the transceiver.
2. **DO NOT** open the transceiver until the transceiver is disconnected from its power source.
3. **DO NOT** force any of the variable components. Turn them slowly and smoothly.
4. **DO NOT** short any circuits or electronic parts. An insulated tuning tool **MUST** be used for all adjustments.
5. **DO NOT** keep power ON for a long time when the transceiver is defective.
6. **DO NOT** transmit power into a signal generator or a sweep generator.
7. **ALWAYS** connect a 50 dB to 60 dB attenuator between the transceiver and a deviation meter or spectrum analyzer when using such test equipment.
8. **READ** the instructions of test equipment thoroughly before connecting equipment to the transceiver.

Icom, Icom Inc. and ICOM are registered trademarks of Icom Incorporated (Japan) in the United States, the United Kingdom, Germany, France, Spain, Russia and/or other countries.

# TABLE OF CONTENTS


**SECTION 1 SPECIFICATIONS**

**SECTION 2 INSIDE VIEWS**

2 - 1 UPPER SIDE . . . . . 2 - 1
2 - 2 LOWER SIDE . . . . . 2 - 1
2 - 3 TOP VIEW . . . . . 2 - 2
2 - 4 BOTTOM VIEW . . . . . 2 - 2
2 - 5 MAIN UNIT . . . . . 2 - 3
2 - 6 DSP-A/DSP-B BOARDS . . . . . 2 - 4
2 - 7 DSP-TX BOARD . . . . . 2 - 4
2 - 8 LOGIC UNIT . . . . . 2 - 5
2 - 9 SCOPE UNIT . . . . . 2 - 5
2 - 10 RXPLL-A UNIT . . . . . 2 - 6
2 - 11 RXPLL-B UNIT . . . . . 2 - 6
2 - 12 OSC UNIT . . . . . 2 - 7
2 - 13 PA200W BOARD . . . . . 2 - 7

**SECTION 3 CIRCUIT DESCRIPTION**

**SECTION 4 ADJUSTMENT PROCEDURES**

**SECTION 5 PARTS LIST**

**SECTION 6 MECHANICAL PARTS AND DISASSEMBLY**

**SECTION 7 SEMI-CONDUCTOR INFORMATION**

**SECTION 8 BOARD LAYOUTS**

8 - 1 DISPLAY BOARD . . . . . 8 - 1
8 - 2 SW-A BOARD . . . . . 8 - 3
8 - 3 SW-B BOARD . . . . . 8 - 3
8 - 4 SW-C BOARD . . . . . 8 - 3
8 - 5 VR-A BOARD . . . . . 8 - 5
8 - 6 VR-B BOARD . . . . . 8 - 5
8 - 7 VR-C BOARD . . . . . 8 - 5
8 - 8 VR-D BOARD . . . . . 8 - 5
8 - 9 JACK BOARD . . . . . 8 - 5
8 - 10 MIC BOARD . . . . . 8 - 5
8 - 11 CF BOARD . . . . . 8 - 5
8 - 12 TENKEY BOARD . . . . . 8 - 7
8 - 13 LED BOARD . . . . . 8 - 7
8 - 14 PBT1 BOARD . . . . . 8 - 7
8 - 15 PBT2 BOARD . . . . . 8 - 7
8 - 16 LOGIC UNIT . . . . . 8 - 9
8 - 17 MEMORY BOARD . . . . . 8 - 11
8 - 18 MAIN UNIT . . . . . 8 - 13
8 - 19 DSP-A/DSP-B BOARDS . . . . . 8 - 15

8 - 20 DSP-TX BOARD . . . . . 8 - 17
8 - 21 SCOPE UNIT . . . . . 8 - 19
8 - 22 RXPLL-A UNIT . . . . . 8 - 21
8 - 23 RXPLL-B UNIT . . . . . 8 - 23
8 - 24 DIGISEL UNIT . . . . . 8 - 25
8 - 25 OSC UNIT . . . . . 8 - 27
8 - 26 ANT-SW UNIT . . . . . 8 - 29
8 - 27 FILTER UNIT . . . . . 8 - 31
8 - 28 NETWORK BOARD . . . . . 8 - 33
8 - 29 CTRL BOARD . . . . . 8 - 35
8 - 30 BPF UNIT . . . . . 8 - 37
8 - 31 PA200W BOARD . . . . . 8 - 39
8 - 32 DC-DC UNIT . . . . . 8 - 41

**SECTION 9 BLOCK DIAGRAMS**

**SECTION 10 WIRING DIAGRAMS**

**SECTION 11 VOLTAGE DIAGRAMS**

11 - 1 DISPLAY BOARD . . . . . 11 - 1
11 - 2 CF BOARD . . . . . 11 - 1
11 - 3 SW-A BOARD . . . . . 11 - 2
11 - 4 VR-B BOARD . . . . . 11 - 2
11 - 5 VR-C BOARD . . . . . 11 - 2
11 - 6 VR-A BOARD . . . . . 11 - 2
11 - 7 MIC BOARD . . . . . 11 - 2
11 - 8 JACK BOARD . . . . . 11 - 2
11 - 9 VR-D BOARD . . . . . 11 - 2
11 - 10 SW-B BOARD . . . . . 11 - 2
11 - 11 TENKEY BOARD . . . . . 11 - 3
11 - 12 SW-C BOARD . . . . . 11 - 4
11 - 13 PBT1 BOARD . . . . . 11 - 4
11 - 14 PBT2 BOARD . . . . . 11 - 4
11 - 15 LED BOARD . . . . . 11 - 4
11 - 16 LOGIC UNIT AND MEMORY BOARD . . . . . 11 - 5
11 - 17 MAIN UNIT . . . . . 11 - 9
11 - 18 DSP-A/DSP-B BOARDS . . . . . 11 - 12
11 - 19 DSP-TX BOARD . . . . . 11 - 13
11 - 20 SCOPE UNIT . . . . . 11 - 14
11 - 21 RXPLL-A/RXPLL-B UNITS . . . . . 11 - 18
11 - 22 DIGISEL UNIT . . . . . 11 - 21
11 - 23 OSC UNIT . . . . . 11 - 23
11 - 24 ANT-SW UNIT . . . . . 11 - 24
11 - 25 FILTER UNIT . . . . . 11 - 24
11 - 26 BPF UNIT . . . . . 11 - 25
11 - 27 NETWORK BOARD . . . . . 11 - 26
11 - 28 CTRL BOARD . . . . . 11 - 27
11 - 29 PA200W BOARD . . . . . 11 - 28
11 - 30 DC-DC UNIT . . . . . 11 - 29

# SECTION 1 SPECIFICATIONS

## ■ GENERAL

• Frequency coverage:
Receive 0.030–60.000 MHz*1, *2
Transmit 0.1357–0.1378 MHz*2 1.800–1.999 MHz*2
3.500–3.999 MHz*2
5.3305, 5.3465, 5.3665, 5.3715, 5.4035 MHz*2
7.000–7.300 MHz*2 10.100–10.150 MHz*2
14.000–14.350 MHz*2 18.068–18.168 MHz*2
21.000–21.450 MHz*2 24.890–24.990 MHz*2
28.000–29.700 MHz*2 50.000–54.000 MHz*2
*1 Some frequency bands are not guaranteed.
*2 Depending on version.

• Mode : USB, LSB, CW, RTTY, AM, FM, PSK31

• Number of memory channels : 101 (99 regular, 2 scan edges)

• Antenna connector : SO-239 × 4 [antenna impedance; 50 Ω]

• Usable temp. range: 0˚C to +50˚C (32˚F to 122˚F)

• Frequency stability : Less than ±0.05 ppm (IC-7800's condition: After 5 min. since turns power ON on the rear panel)

• Freq. resolution : 1 Hz

• Power supply voltage : 85–265 V AC (universal input)

• Power consumption :
Transmit at 200 W 800 VA
Receive stand-by 200 VA (typical)
max. audio 210 VA (typical)

• Dimensions (Proj. not included) : 424 (W) × 149(H) × 435(D) mm
16 11/16(W) × 5 7/8(H) × 17 1/8(D) in

• Weight : Approximate 25 kg (55 lb)

• ACC 1 connector : 8-pin DIN connector

• ACC 2 connector : 7-pin DIN connector

• CI-V connector : 2-conductor 3.5(d) mm (1/8")

• Display : 7-inch diagonal wide TFT color LCD (800 × 480)

## ■ TRANSMITTER

• Output power :
HF: SSB/CW/RTTY/FM/PSK31 5–200 W
AM 5–50 W
137 kHz: CW More than –20 dBm
(except for [USA] and [KOR])

• Modulation system :
SSB PSN modulation
AM Low power modulation
FM Phase modulation

• Spurious emission : More than 60 dB (HF bands)
More than 70 dB (50 MHz band)

• Carrier suppression: More than 63 dB (HF bands)
More than 73 dB (50 MHz band)

• Unwanted sideband suppression: More than 80 dB

• Mic. connector : 8-pin connector (600 Ω)

• ELE-KEY connector: 3-conductor 6.35(d) mm (1/4")

• KEY connector : 3-conductor 6.35(d) mm (1/4")

• SEND connector : Phono (RCA)

• ALC connector : Phono (RCA)

## ■ RECEIVER

• Receive system : Double-conversion superheterodyne

• Intermediate frequencies:
1st IF frequency 64.455 MHz (Main band)
64.555 kHz (Sub band)
2nd IF frequency 36 kHz

• Sensitivity (Typ.) :
SSB, CW, RTTY (at 2.4 kHz bandwidth)
0.1–1.799 MHz*1 0.5 µV (10 dB S/N)
1.8–29.99 MHz*1 0.16 µV (10 dB S/N)
50.0–54.0 MHz*2 0.13 µV (10 dB S/N)
AM (at 6.0 kHz bandwidth)
0.1–1.799 MHz*1 6.3 µV (10 dB S/N)
1.8–29.99 MHz*1 2.0 µV (10 dB S/N)
50.0–54.0 MHz*2 1.0 µV (10 dB S/N)
FM (at 15 kHz bandwidth)
28.0–29.99 MHz*1 0.5 µV (12 dB SINAD)
50.0–54.0 MHz*2 0.32 µV (12 dB SINAD)
*1 Pre-amp1 is ON *2 Pre-amp2 is ON

• Squelch sensitivity : (Pre-amp OFF)
SSB/CW/RTTY/PSK31 Less than 5.6 µV
FM Less than 1.0 µV

• Selectivity :
SSB/RTTY (at 2.4 kHz bandwidth)
More than 2.4 kHz/–3 dB
Less than 3.6 kHz/–60 dB
CW (at 500 Hz bandwidth)
More than 500 Hz/–3 dB
Less than 700 Hz/–60 dB
AM (at 6 kHz bandwidth)
More than 6.0 kHz/–3 dB
Less than 15.0 kHz/–60 dB
FM (at 15 kHz bandwidth)
More than 12 kHz/–6 dB
Less than 20 kHz/–60 dB

• Spurious and image rejection response ratio:
More than 70 dB

• RIT variable range : ±9.999 kHz

• Audio output power : More than 2.6 W at 10 % distortion with an 8 Ω load

• PHONES connector: 3-conductor 6.35 (d) mm (1/4")

• EXT SP connector : 2-conductor 3.5 (d) mm (1/8") 8 Ω × 2 (for Main and Sub)

## ■ ANTENNA TUNER

• Output matching range:
HF bands 16.7–50 Ω unbalanced*1
50 MHz band 20–125 Ω unbalanced*2
*1 VSWR better than 3:1; *2 VSWR better than 2.5:1

• Minimum operating input power:
HF bands : 8 W
50 MHz band : 15 W

• Tuning accuracy : VSWR 1.5:1 or better

• Insertion loss (after tuning) : Less than 1.0 dB

**All stated specifications are subject to change without notice or obligation.**

# SECTION 2 INSIDE VIEWS

## 2-1 UPPER SIDE

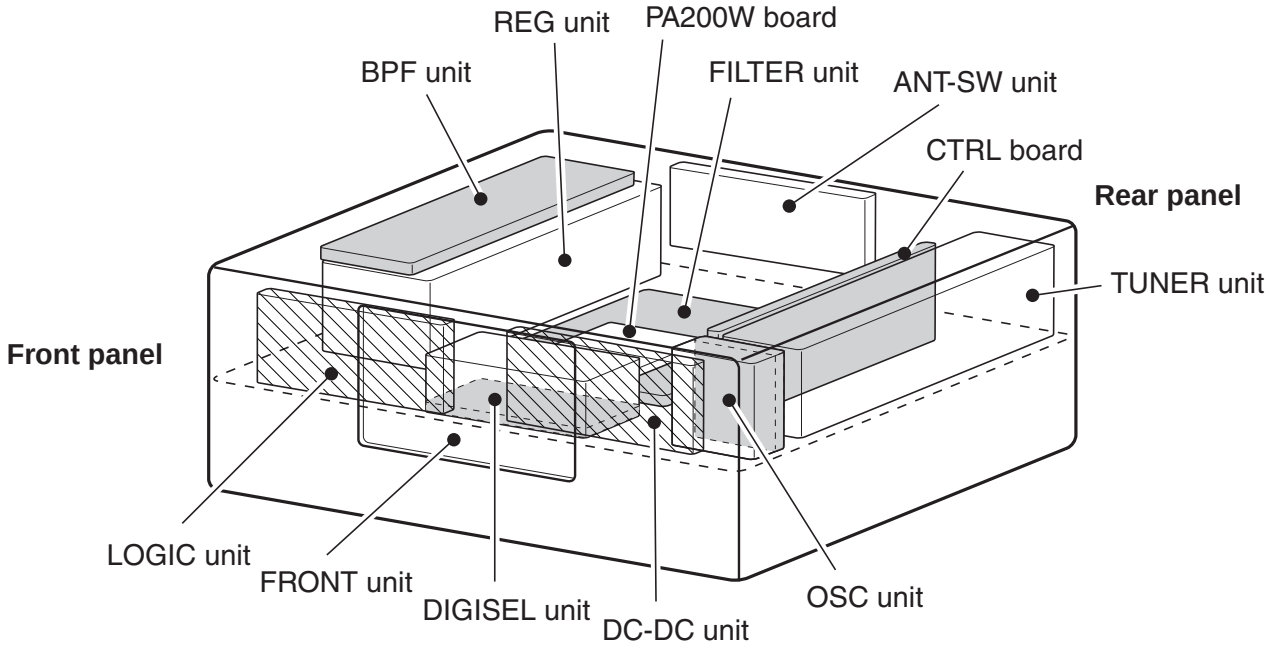


## 2-2 LOWER SIDE

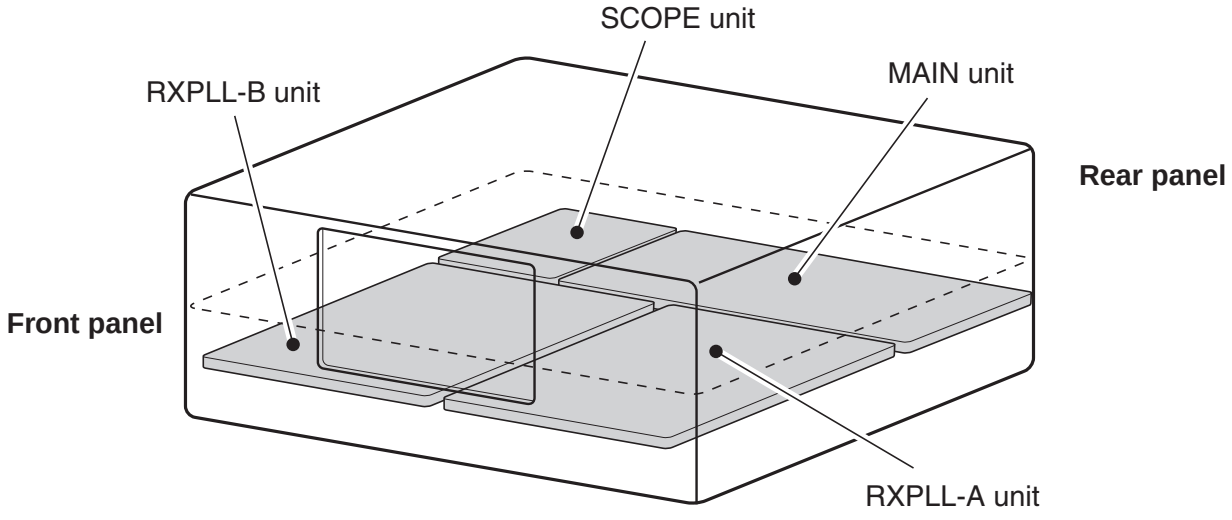

## 2-3 TOP VIEW

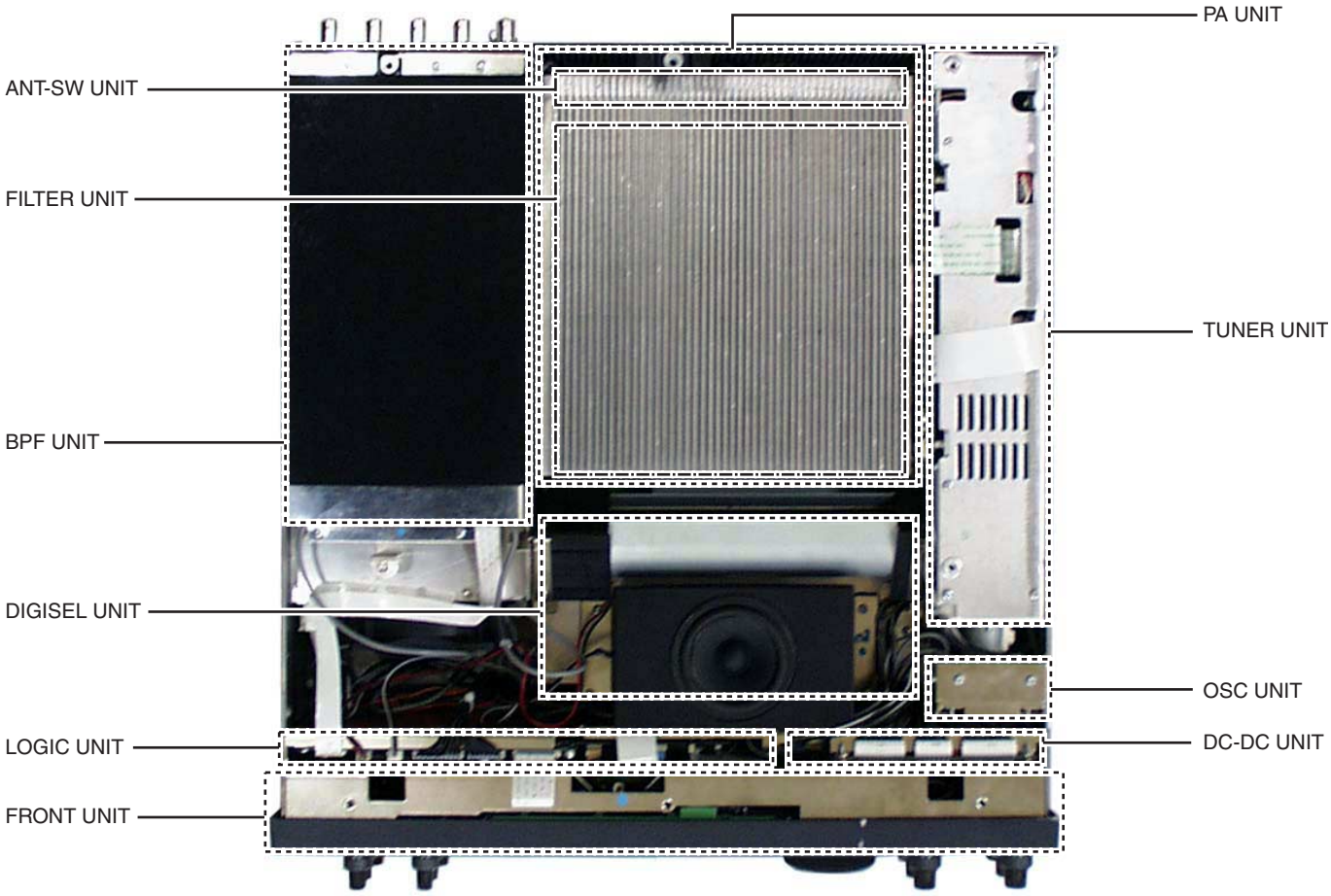


## 2-4 BOTTOM VIEW

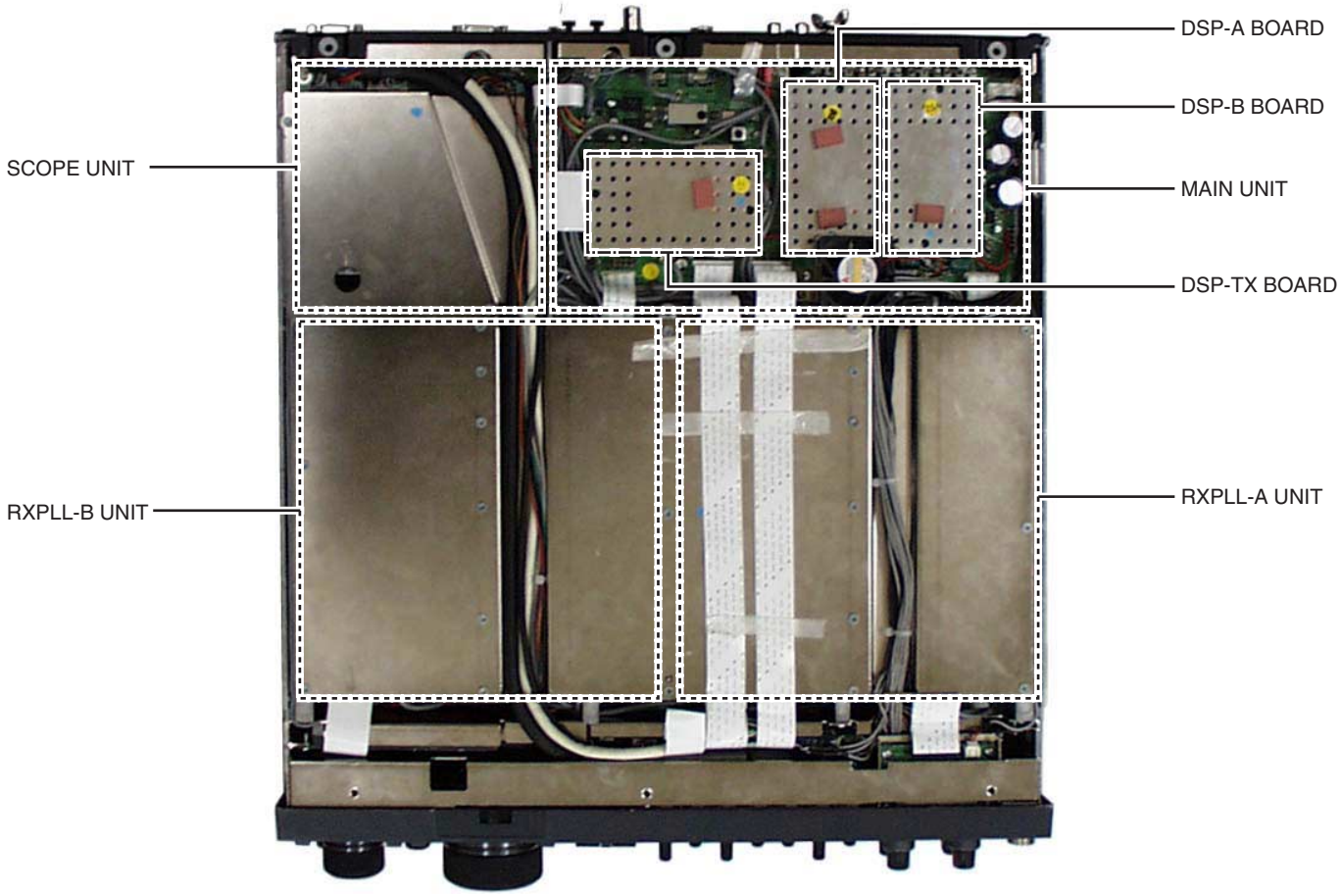

## 2-5 MAIN UNIT

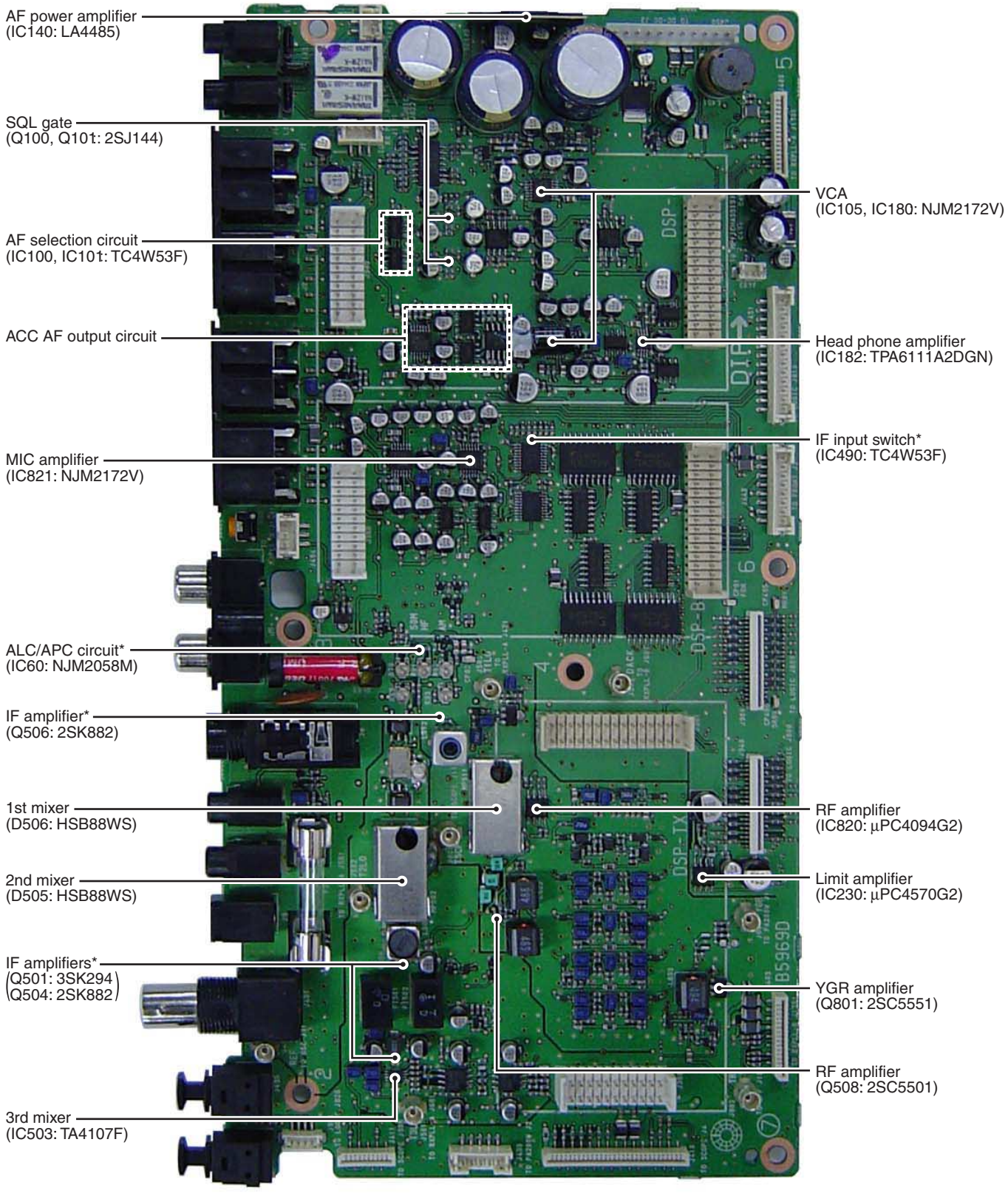


*Located under side of the point

## 2-6 DSP-A/DSP-B BOARDS

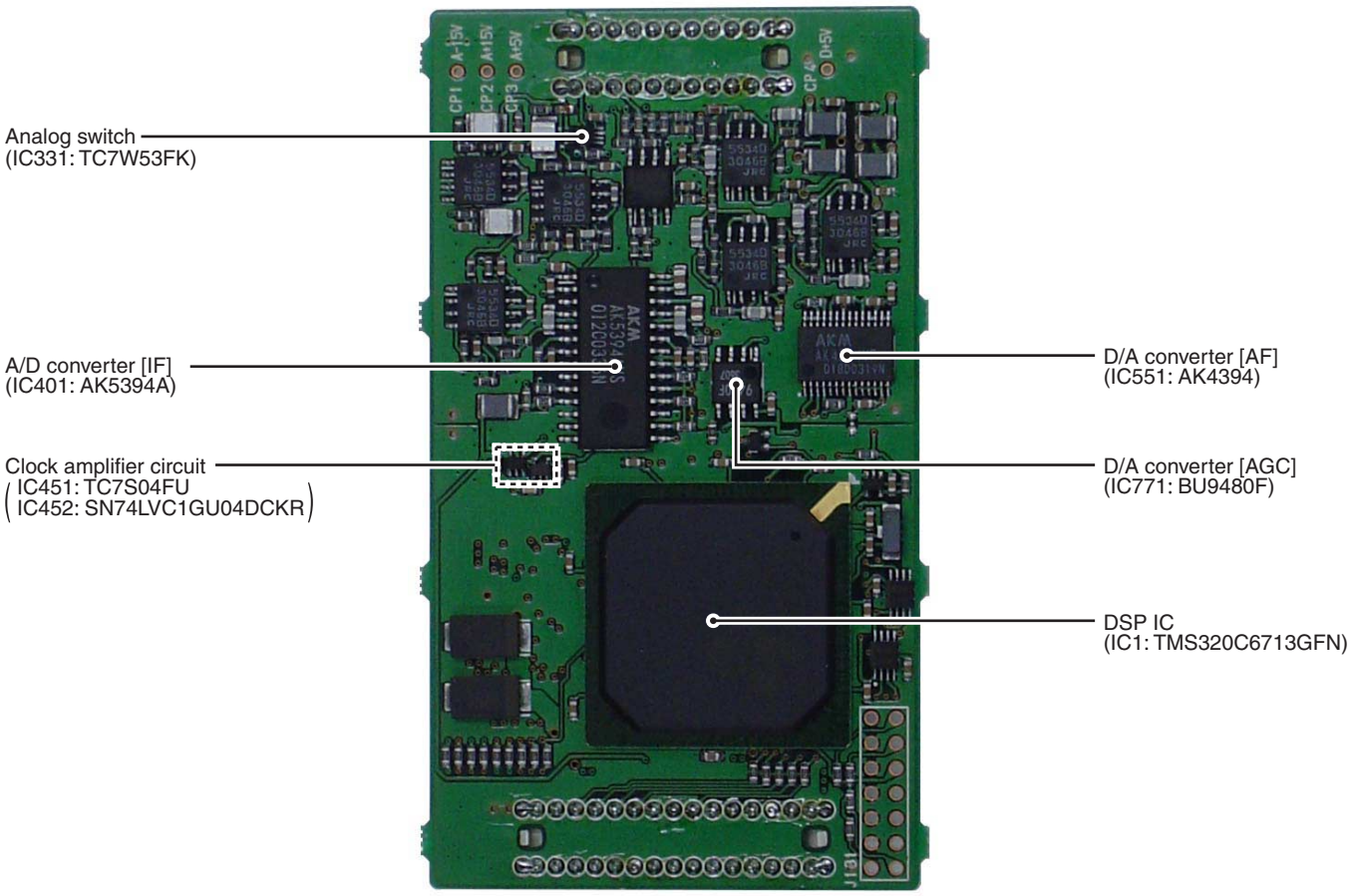


## 2-7 DSP-TX BOARD

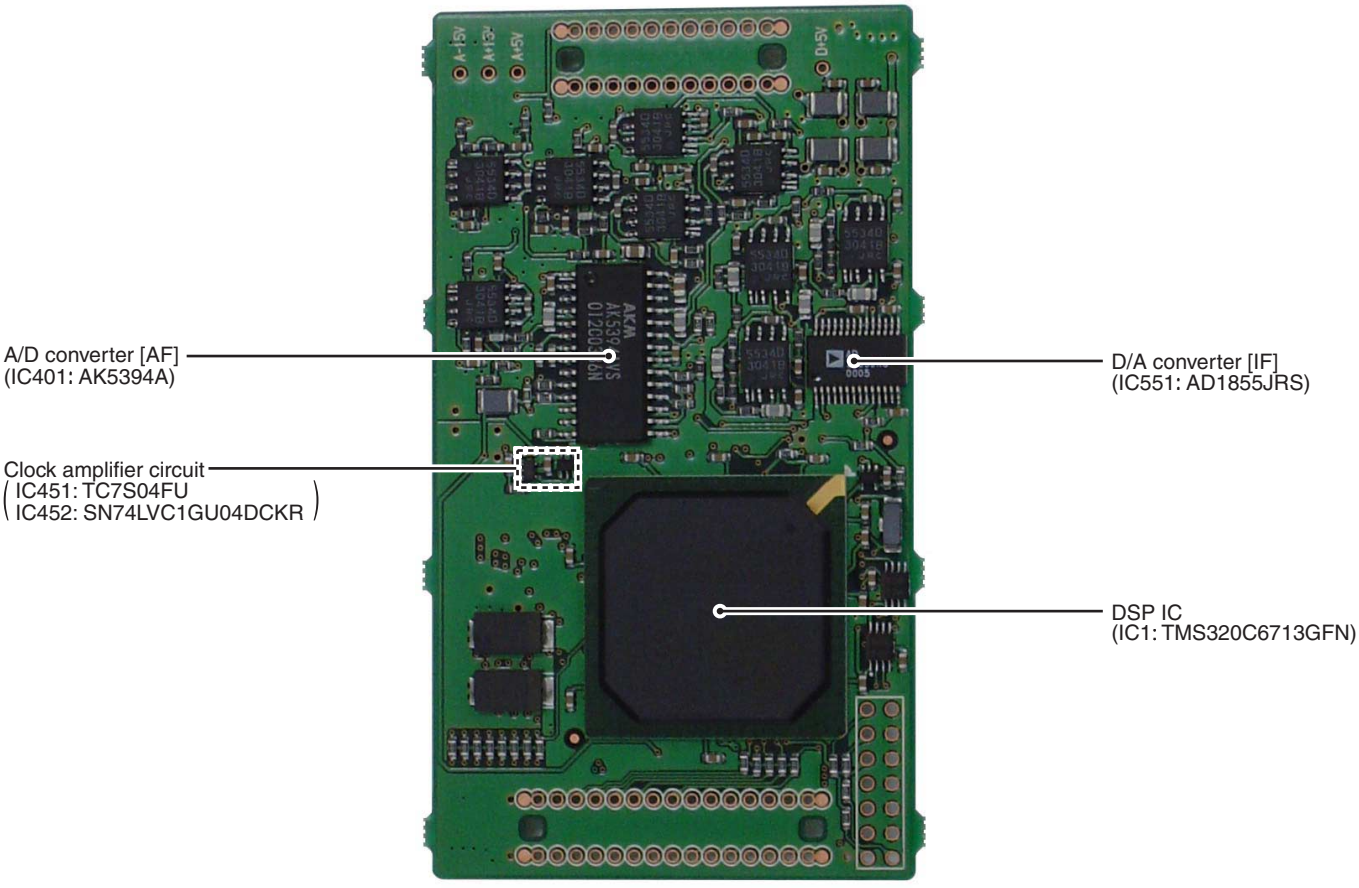

## 2-8 LOGIC UNIT

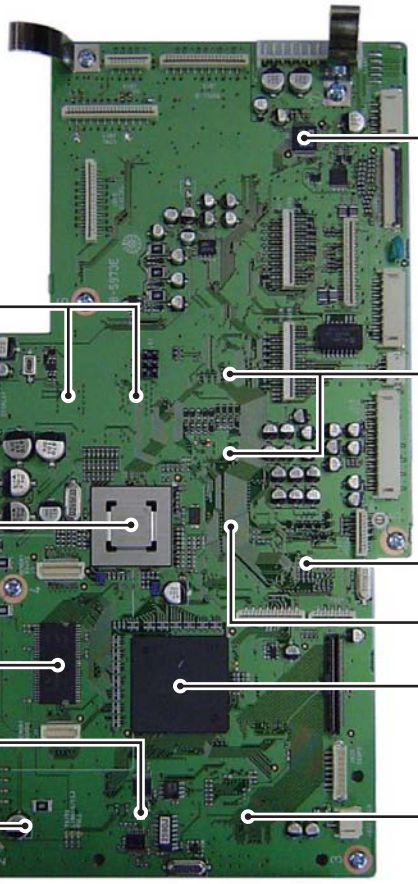

RGB converter
(IC204: ADV7123KST50)

SDRAM*
(IC201, IC202: MT48LC16M16A2TG)

CPLD*
(IC52, IC605: XC9572XL)

GDC
(IC203: HD64404BT)

MAIN CPU2*
(IC604: HD64F2377VFQ33V)

Dual port SRAM*
(IC51: IDT70V24L25PF)

SDRAM
(IC1*, IC2: MT48LC16M16A2TG)

MAIN CPU1
(IC103: HD6417751RBP200)

LAN controller*
(IC404: RTL8139C+)

FAN controller*
(IC821: NJM2904M)

CF controller*
(IC401: PCI1410APGE)

*Located under side of the point

## 2-9 SCOPE UNIT

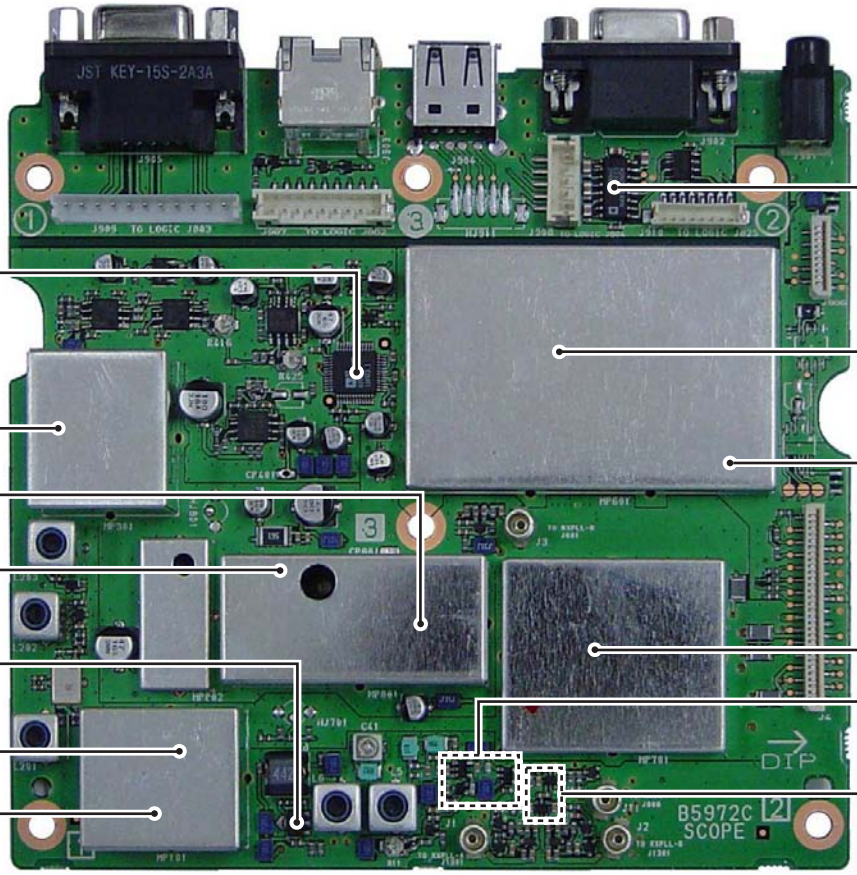


5V/RC-232C
level converter
(IC903: ADM202EARN)

A/D converter
(IC501: AD7650AST)

DSP IC
(IC601:
TMS320C6711CGDP200)

S3 mixer
(D4: HSB88WS)

1.26V regulator
(IC201: SI-3012KS)

PLL IC
(IC801: LMX2306TM)

VCO
(Q821: 2SK210)

14bit DDS IC
(IC820: AD9857AST)

1st IF amplifier
(Q2: 2SC5551)

SCOPE ATT circuit
(D1: CPH5513
D2: CPH5513
D3: 1SV263)

S2LO amplifier
(Q101: 2SC4673)

Switching ICs
(IC1,IC31: µPG2009TB)

S2 mixer
(D101: HSB88WS)

## 2-10 RXPLL-A UNIT

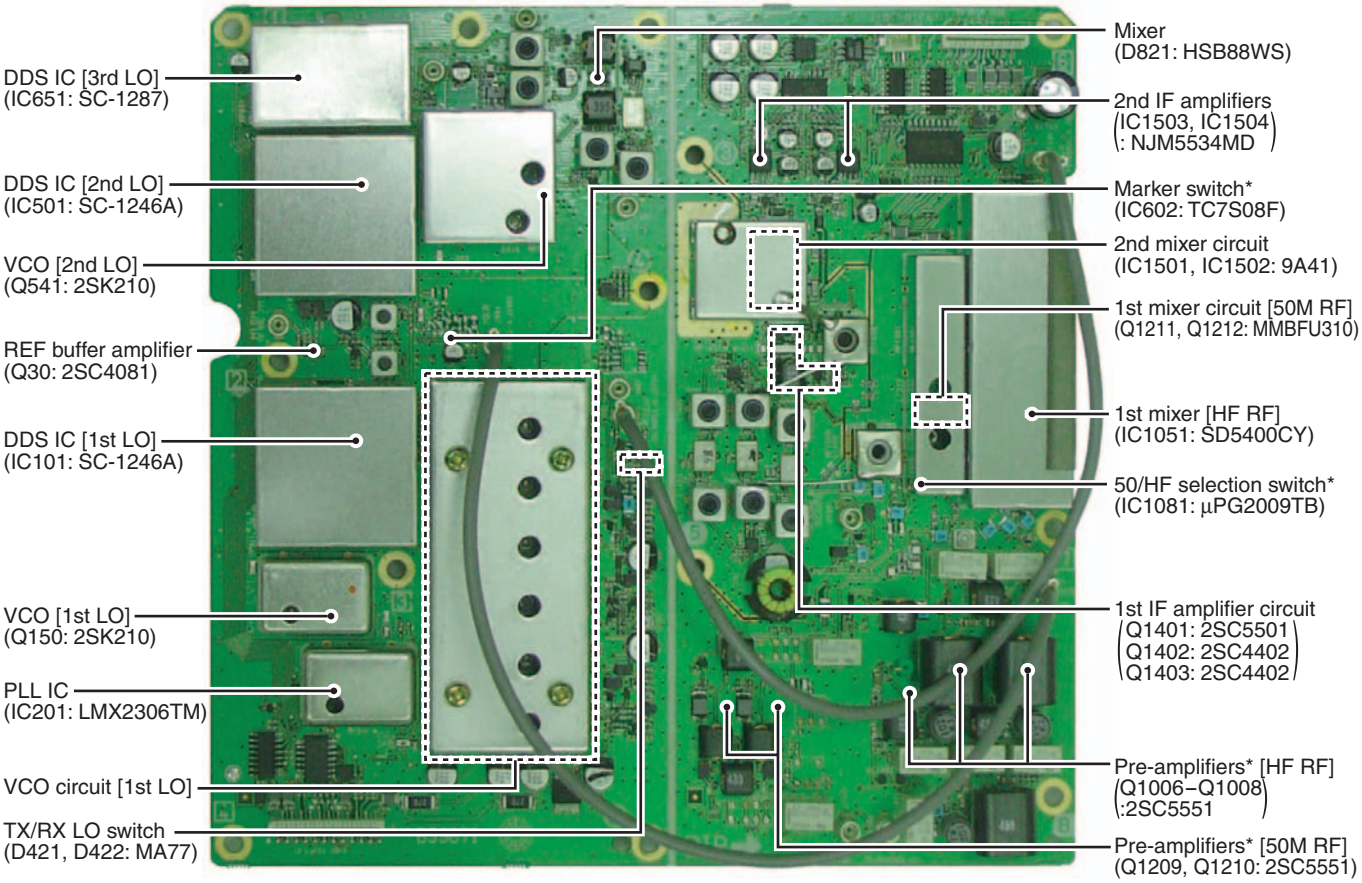


*Located under side of the point

## 2-11 RXPLL-B UNIT

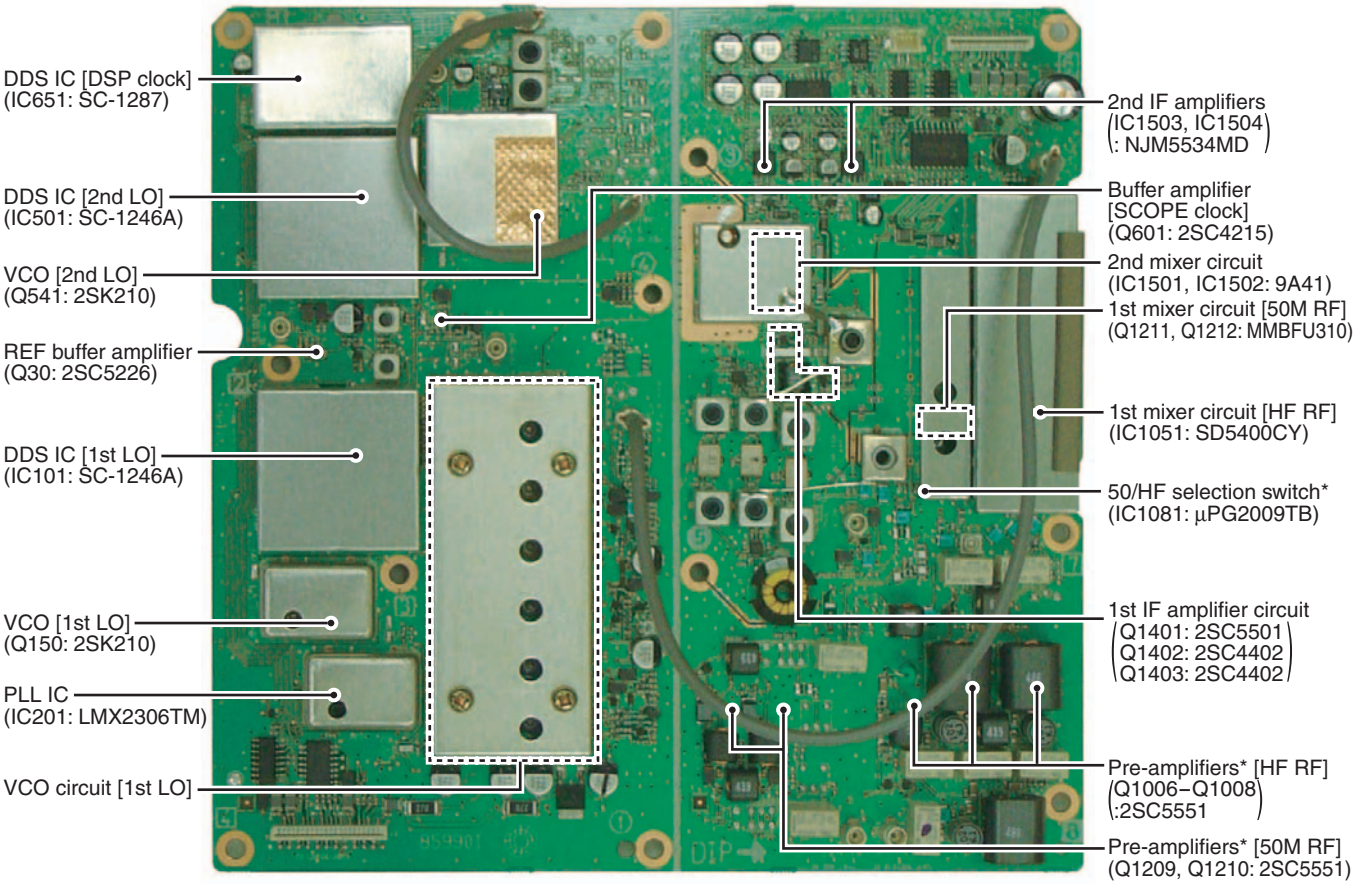


*Located under side of the point

## 2-12 OSC UNIT

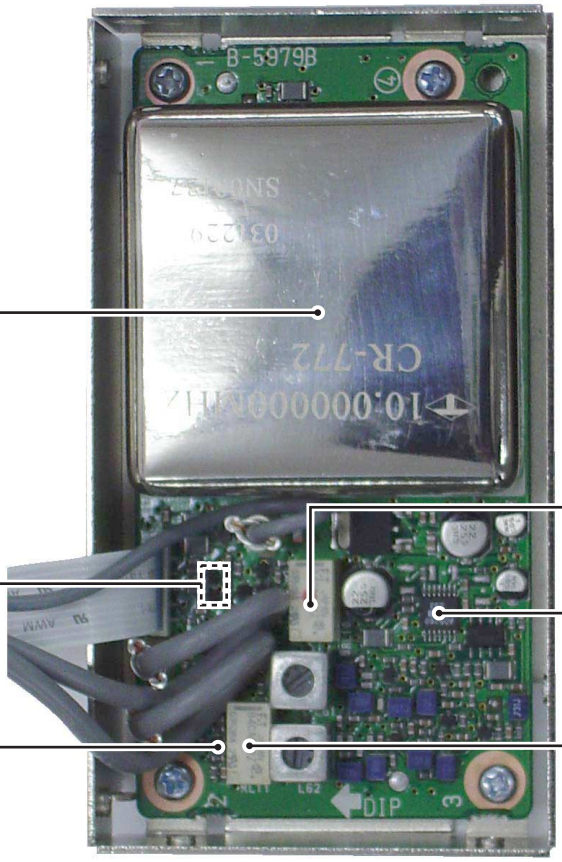


10MHz OCXO
(X1: CR-772)

I/O controller
(Q12, Q13: DTC114EU)

Buffer amplifier
(Q70: 2SC4081)

Switching relay
(RL10: FTR-B4CA012Z)

D/A converter
(IC91: AD5260BRU50)

Switching relay
(RL11: FTR-B4CA012Z)

## 2-13 PA200W BOARD

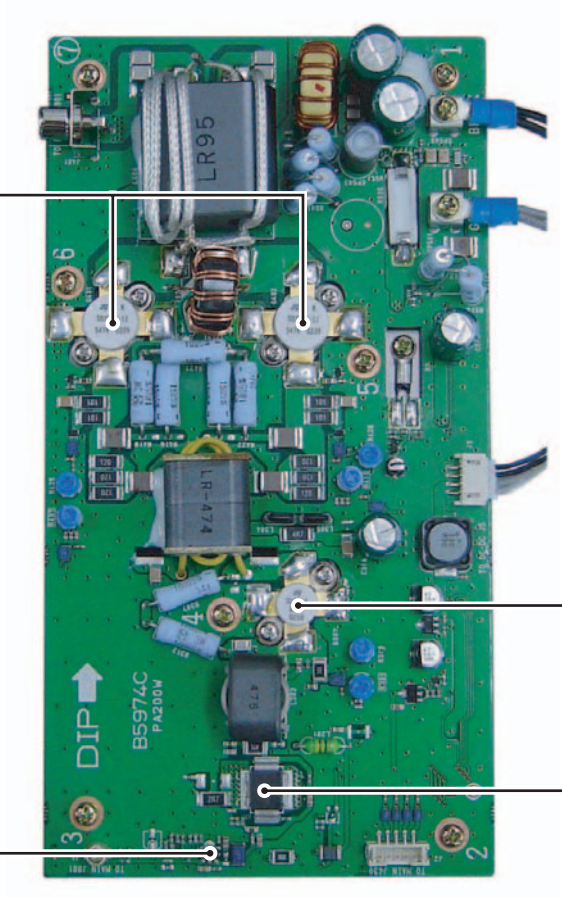


Power amplifiers
(Q401, Q402: SD2931)

Drive amplifier
(Q301: SD2918)

Pre-drive amplifier
(Q201: PD55003)

RF amplifier
(Q101: RD01MUS1)

# SECTION 3 CIRCUIT DESCRIPTION

## 3-1 RECEIVER CIRCUITS

### 3-1-1 ANTENNA SWITCHING CIRCUIT (ANT-SW UNIT)

The ANTENNA switching circuit leads receive signals to bandpass filters from an antenna connector while receiving. However, the circuit leads the signal from the RF power amplifier to the antenna connector while transmitting.
RF signals are applied to the RX-A, RX-B or RX-ONLY circuits.

**• RX-A CIRCUIT**
RF signals from [ANT1], [ANT2], [ANT3] or [ANT4] pass through one of the antenna selectors (RL51; passing through [ANT1], RL61; passing through [ANT2], RL71; passing through [ANT3], RL81; passing through [ANT4]), and are then applied to the CTRL board via J1.

The RF signals pass through the current detector (CTRL board; D301, D302), and are then applied to the BPF unit via J351 on the CTRL board.

**• RX-B CIRCUIT**
RF signals from [ANT1], [ANT2], [ANT3] or [ANT4] pass through one of the antenna selectors (RL52; passing through [ANT1], RL62; passing through [ANT2], RL72; passing through [ANT3], RL82; passing through the ANT4), and are then applied to the BPF unit via J2.

**• RX-ONLY CIRCUIT**
RF signals from [ANT4] pass through the antenna selector (RL84), and are then applied to the BPF unit via J3.

### 3-1-2 BANDPASS FILTER CIRCUIT (BPF, AND DIGISEL UNITS)

RF bandpass filters pass only the desired band signals and suppress any undesired band signals. The RF circuit has 11 bandpass filters and 1 low-pass filter.

**• RX-A OR RX-ONLY CIRCUITS**
RF signals from RX-A circuit (CTRL board; J351) or RX-ONLY circuit (ANT-SW unit; J3) are applied to the RF signal switching circuit (BPF unit; RL402). The filtered signals pass through (or bypass) splitter (BPF unit; L371–L373) via the RL371 and RL355 (BPF unit), and are then attenuated at RL354 (3 dB), RL353 (6 dB) and RL352 (12 dB) on the BPF unit. A portion of the filtered signals are separated at the splitter, and are then applied to the RX-B circuit's DW selector (BPF unit; RL855).

The attenuated signals pass through the low-pass filter or one of the bandpass filters via the 6M selector (BPF unit; RL851).

**(1) 0.03–30 MHz (BPF AND DIGISEL UNITS)**
The signals pass through the low-pass filter or one of the 9 bandpass filters. The filtered signals pass through (or bypass) the bandpass filter and the RF amplifier (DIGISEL unit; Q201) via the D_S_THRU selectors (RL21, RL2) on the DIGISEL unit, and are then applied to the pre-amplifier circuit on the RXPLL-A unit.

**(2) 50–60 MHz (BPF UNIT)**
The signals pass through the one of the 2 bandpass filters, and are then amplified (or bypass) at the DW amplifier (Q901) via the DW selectors (RL900, RL901). The signals are applied to (or bypass) the pre-amplifier circuit.

**• RX-B CIRCUIT**
RF signals from RX-B circuit (ANT-SW unit; J2) pass through the REV_Po detector (BPF unit; Q873, D872). The signals are applied to the DW selector (BPF unit; RL855). A portion of RF signals from RX-A or RX-ONLY circuits are applied to the this selector too.

The signals are attenuated at RL854 (3 dB), RL853 (6 dB) and RL852 (12 dB) on the BPF unit, and are then applied to the 6M selector (BPF unit; RL851).

The attenuated signals pass through the low-pass filter or one of the bandpass filters.

**(1) 0.03–30 MHz (BPF AND DIGISEL UNITS)**
The signals pass through the low-pass filter or one of the 9 bandpass filters. The filtered signals pass through (or bypass) the bandpass filter and the RF amplifier (DIGISEL unit; Q701) via the D_S_THRU selectors (RL521, RL502) on the DIGISEL unit, and are then applied to the pre-amplifier circuit on the RXPLL-B unit.

**(2) 50–60 MHz (BPF UNIT)**
The signals pass through the one of the 2 bandpass filter, and are then amplified (or bypass) at the DW amplifier (Q951) via the DW selectors (RL950, RL951). The signals are applied to the pre-amplifier circuit.

### 3-1-3 PRE-AMPLIFIER CIRCUITS (BPF, RXPLL-A, AND RXPLL-B UNITS)

The IC-7800 has 2 gain levels of pre-amplifier circuits which is composed of the pre-amplifier1 and pre-amplifier2. The circuit is controlled by [P.AMP] switch.

**• RX-A OR RX-ONLY CIRCUITS**
**(1) 0.03–30 MHz (RXPLL-A UNIT)**
The RF signals from the DIGISEL unit are applied to (or bypass) the DW amplifier (Q1001) via the DW selectors (RL1001, RL1002), and are then applied to the pre-amplifier circuit.

When [P.AMP] switch is set to [P.AMP 1] or [P.AMP 2], the signals are applied to the pre-amplifier1 (Q1007, Q1008) or pre-amplifier2 (Q1006) circuit via the P.AMP_ON selectors (RL1003, RL1006) and P.AMP selectors (RL1004, RL1005), respectively. Pre-amplified or bypassed signals are applied to the 1st mixer circuit after being passed through the low-pass filter (L1052–L1054, C1053–C1057, C1067).

**(2) 50–60 MHz (BPF AND RXPLL-A UNITS)**
When [P.AMP] switch is set to [P.AMP 1] or [P.AMP 2], the amplified signals from the DW amplifier (BPF unit; Q901) are applied to the pre-amplifier2 (BPF unit; Q903) or pre-amplifier1 (RXPLL-A unit; Q1209, Q1210) via the P.AMP2_ON selectors (BPF unit; RL902, RL903) and P.AMP1_ON selectors (RXPLL-A unit; RL1203, RL1206), respectively. Pre-amplified or bypassed signals are applied to the 1st mixer circuit after being passed through the low-pass filter (RXPLL-A unit; L1217–L1219, C1244–C1250, C1268).

### • RX-B CIRCUIT
**(1) 0.03–30 MHz (RXPLL-B UNIT)**
The RF signals from the DIGISEL unit are applied to (or bypass) the DW amplifier (Q1001) via the DW selectors (RL1001, RL1002), and are then applied to the pre-amplifier circuit.

When [P.AMP] switch is set to [P.AMP 1] or [P.AMP 2], the signals are applied to the pre-amplifier1 (Q1007, Q1008) or pre-amplifier2 (Q1006) circuit via the P.AMP_ON selectors (RL1003, RL1006) and P.AMP selectors (RL1004, RL1005), respectively. Pre-amplified or bypassed signals are applied to the 1st mixer circuit after being passed through the low-pass filter (L1052–L1054, C1053–C1057, C1067).

**(2) 50–60 MHz (BPF AND RXPLL-B UNITS)**
When [P.AMP] switch is set to [P.AMP 1] or [P.AMP 2], the amplified signals from the DW amplifier (BPF unit; Q961) are applied to the pre-amplifier2 (BPF unit; Q953) or pre-amplifier1 (RXPLL-B unit; Q1209, Q1210) via the P.AMP2_ON selectors (BPF unit; RL952, RL953) and P.AMP1_ON selectors (RXPLL-B unit; RL1203, RL1206), respectively. Pre-amplified or bypassed signals are applied to the 1st mixer circuit after being passed through the low-pass filter (RXPLL-B unit; L1217–L1219, C1244–C1250, C1268).

## 3-1-4 1ST MIXER CIRCUIT (RXPLL-A AND RXPLL-B UNITS)
The 1st mixer circuit mixes the receive signals with the 1st LO signal to convert the receive signal frequencies into a 64.455 MHz (main) or 64.555 MHz (sub) 1st IF signal. The IC-7800 has four 1st mixer circuits for the dualwatch function.

### • RX-A OR RX-ONLY CIRCUITS (RXPLL-A UNIT)
**(1) 0.03–30 MHz**
The filtered signals pass through the L1055, and are then applied to the 1st mixer circuit (IC1051). The applied signals are mixed with 1st LO signal from the RXPLL-A circuit to convert into a fixed 64.455 MHz 1st IF signal.

The converted 1st IF signal is applied to the 50/HF selector (IC1081, pin 1).

**(2) 50–60 MHz**
The filtered signals pass through the L1220, and are then applied to the 1st mixer circuit (Q1211, Q1212). The applied signals are mixed with 1st LO signal from the RXPLL-A circuit to convert into a fixed 64.455 MHz 1st IF signal.

The converted 1st IF signal is applied to the 50/HF selector (IC1081, pin 3).

The selected 1st IF signal passes through the low-pass filter (L1058, L1060, L1062, L1063, C1061, C1062, C1064, C1066, C1070, C1074, R1054), and is then applied to the 1st IF circuit.

### • RX-B CIRCUIT (RXPLL-B UNIT)
**(1) 0.03–30 MHz**
The filtered signals pass through the L1055, and are then applied to the 1st mixer circuit (IC1051). The applied signals are mixed with 1st LO signal from the RXPLL-B circuit to convert into a fixed 64.555 MHz 1st IF signal.

The converted 1st IF signal is applied to the 50/HF selector (IC1081, pin 1).

**(2) 50–60 MHz**
The filtered signals pass through the L1220, and are then applied to the 1st mixer circuit (Q1211, Q1212). The applied signals are mixed with 1st LO signal from the RXPLL-B circuit to into a fixed 64.555 MHz 1st IF signal.

The converted 1st IF signal is applied to the 50/HF selector (IC1081, pin 3).

The selected 1st IF signal passes through the low-pass filter (L1058, L1060, L1062, L1063, C1061, C1062, C1064, C1066, C1070, C1074, R1054), and is then applied to the 1st IF circuit.

### • RECEIVER CONSTRUCTION

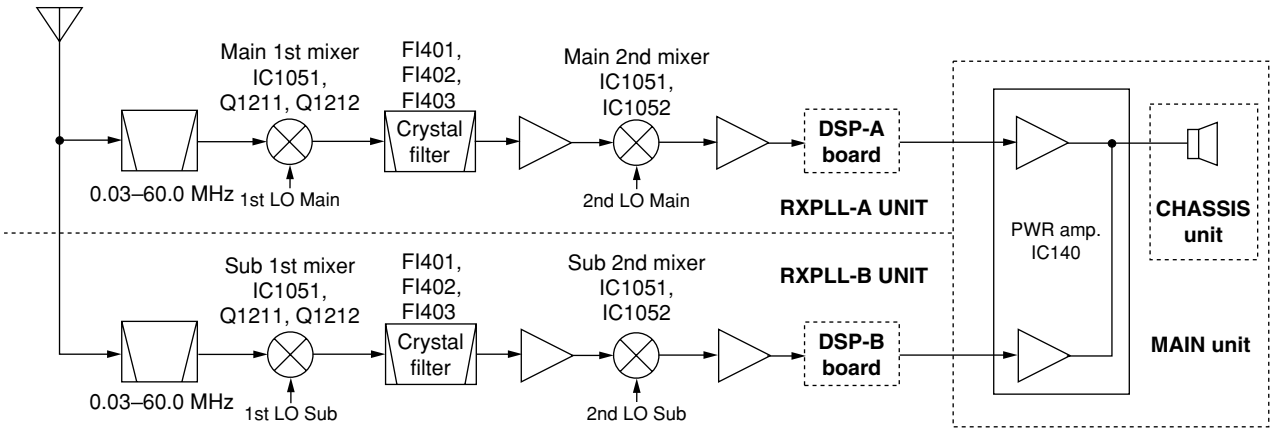

### 3-1-5 1ST IF CIRCUIT (RXPLL-A AND RXPLL-B UNITS)

The 1st IF circuit filters and amplifies the 1st IF signal. The 1st IF signal from the 1st mixer circuit is applied to an MCF (Monolithic Crystal Filter) to suppress out-of-band signals.

**• RX-A OR RX-ONLY CIRCUITS (RXPLL-A UNIT)**

The filtered 1st IF signal from the low-pass filter passes through the one of the three crystal bandpass (roofing) filters (FI1401: bandwidth is 15 kHz, FI402: bandwidth is 6 kHz or FI403: bandwidth is 3 kHz) via the FIL selectors (IC1402, IC1403). The filtered signal is amplified at the 1st IF amplifiers (Q1401–Q1403) via the low-pass filter (L1405, L1406, C1420, C1421). The amplified 1st IF signal is applied to the 2nd mixer circuit.

**• RX-B CIRCUIT (RXPLL-B UNIT)**

The filtered 1st IF signals from the low-pass filter passes through the one of the three crystal bandpass (roofing) filters (FI1401: bandwidth is 15 kHz, FI1402: bandwidth is 6 kHz or FI1403: bandwidth is 3 kHz) via the FIL selectors (IC1402, IC1403). The filtered signal is amplified at the 1st IF amplifiers (Q1401–Q1403) via the low-pass filter (L1405, L1406, C1420, C1421), and is then applied to the 2nd mixer circuit.

### 3-1-6 2ND MIXER CIRCUIT (RXPLL-A AND RXPLL-B UNITS)

The 2nd mixer circuit mixes the amplified 1st IF signal and 2nd LO signal for conversion into the 2nd IF signal.

**• RX-A OR RX-ONLY CIRCUITS (RXPLL-A UNIT)**

The 1st IF signal from the 1st IF amplifiers (Q1401–Q1403) is applied to the 2nd mixer circuit (IC1501, pin 4, IC1502, pin 4) respectively. The applied signals are mixed with 2nd LO signal from the RXPLL-A circuit to convert into 36 kHz 2nd IF signal.

The 2nd IF signal from the 2nd mixer circuit (IC1501, pin 5) is amplified at the buffer amplifier (Q1501), and is then applied to the 2nd IF amplifier (IC1503, pin 3). The signal is applied to the 90 degrees transphasor (IC1505, pin 6).

The 2nd IF signal from the other 2nd mixer circuit (IC1502, pin 5) is amplified at the buffer amplifier (Q1502), and is then applied to the 2nd IF amplifier (IC1504, pin 3). The signal is applied to the 90 degrees transphasor (IC1505, pin 2).

The signals from the 90 degrees transphasor (IC1505, pins 1, 7) are applied to the compositor (IC1505, pins 9, 10). The signal is amplified at other 2nd IF amplifier (IC1506), and is then applied to the DSP-A board to demodulate 2nd IF signal.

A portion of 2nd IF signal from the compositor (IC1505, pin 8) is applied to the AGC detector circuit.

The 2nd mixer circuit has 2 mixers and 90 degrees transphasor to improve image rejection ratio.

**• RX-B CIRCUIT (RXPLL-B UNIT)**

The 1st IF signal from the 1st IF amplifiers (Q1401–Q1403) is applied to the 2nd mixer circuit (IC1501, pin 4, IC1502, pin 4) respectively. The applied signals are mixed with 2nd LO signal from the RX-B circuit to convert into 36 kHz 2nd IF signal.

The 2nd IF signal from the 2nd mixer circuit (IC1501, pin 5) is amplified at the buffer amplifier (Q1501), and is then applied to the 2nd IF amplifier (IC1503, pin 3). The signal is applied to the 90 degrees transphasor (IC1505, pin 6).

The 2nd IF signal from the other 2nd mixer circuit (IC1502, pin 5) is amplified at the buffer amplifier (Q1502), and is then applied to the 2nd IF amplifier (IC1504, pin 3). The signal is applied to the 90 degrees transphasor (IC1505, pin 2).

The signals from the 90 degrees transphasor (IC1505, pins 1, 7) are applied to the compositor (IC1505, pins 9, 10). The signal is amplified at other 2nd IF amplifier (IC1506), and is then applied to the DSP-B board to demodulate 2nd IF signal.

A portion of 2nd IF signal from the compositor (IC1505, pin 8) is applied to the AGC detector circuit.

The 2nd mixer circuit has 2 mixers and 90 degrees transphasor to improve image rejection ratio.

**• DSP CIRCUIT (RECEIVER)**

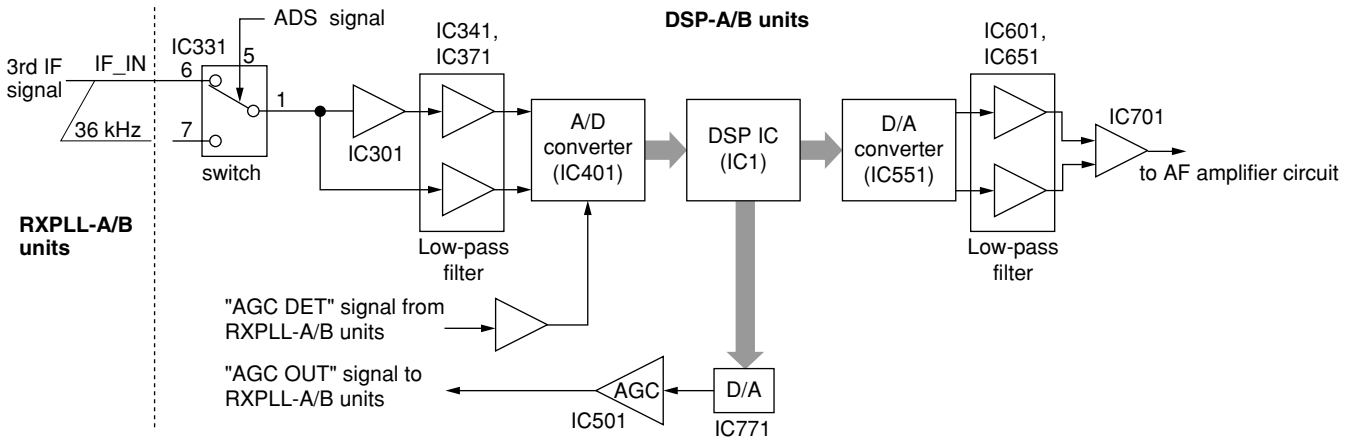

### 3-1-7 DSP RECEIVER CIRCUIT (DSP-A AND DSP-B BOARDS)

The DSP (Digital Signal Processor) circuit enables digital IF filter, digital noise reduction, digital PSN (Phase Shift Network)/Low Power/Phase demodulation, digital automatic notch, etc.

**• RX-A AND RX-ONLY CIRCUITS (DSP-A BOARD)**

The 36 kHz 2nd IF signal from the 2nd IF amplifier (RXPLL-A unit, IC1506) passes through the analog switch (IC331, pins 1, 7) with limiter function, and is then applied to the buffer amplifiers (IC301, pin 2, IC341, pin 2, IC371, pin 2) to convert to balancing signal. The signal is applied to the A/D convertor (IC401, pins 4, 5).

The converted digital signals are applied to the DSP IC (IC1) to do filtering, demodulate and so on. The demodulated digital signals are applied to the D/A convertor (IC551) to convert into analog AF signals.

The converted analog AF signals pass through the low-pass filter (IC601, pins 3, 6, IC651, pins 3, 6), and are then applied to the buffer amplifier (IC701, pins 2, 3) to convert into unbalancing signals.

The signals are applied to the AF amplifier circuit.

**• RX-B CIRCUIT (DSP-B BOARD)**

The 36 kHz 2nd IF signal from the 2nd IF amplifier (RXPLL-B unit, IC1506) passes through the analog switch (IC331, pins 1, 7) with limiter function, and is then applied to the buffer amplifiers (IC301, pin 2, IC341, pin 2, IC371, pin 2) to convert to balancing signal. The signal is applied to the A/D convertor (IC401, pins 4, 5).

The converted digital signals are applied to the DSP IC (IC1) to do filtering, demodulate and so on. The demodulated digital signals are applied to the D/A convertor (IC551) to convert into analog AF signals.

The converted analog AF signals pass through the low-pass filter (IC601, pins 3, 6, IC651, pins 3, 6), and are then applied to the buffer amplifier (IC701, pins 2, 3) to convert into unbalancing signals.

The signals are applied to the AF amplifier circuit.

### 3-1-8 AF AMPLIFIER CIRCUITS (MAIN UNIT)

The AF amplifier circuits amplifies the AF input signals to the suitable driving level for the speaker.

**• MAIN SPEAKER OUTPUT**

The AF signals from the DSP-A and DSP-B boards are applied to the AF switch (MAIN unit: IC100, pin 7 for DSP-A, pin 6 for DSP-B), and pass through the SQL switch (Q100) which is controlled by “SQLM” signal. The signals are applied to the buffer amplifier (IC102, pin 3), and are then amplified at the VCA (Voltage Control Amplifier) circuit (IC105, pin 14). The amplified signals from the VCA circuit (pin 11) are applied to the AF power amplifier (IC140, pin 1) to obtain the suitable driving level for speaker. The output signals from pin 13 pass through the mute switch (Q141, RL140), and are then applied to the internal speaker jack (J142, pin 1) via the MAIN speaker phone jack (J140).

**• SUB SPEAKER OUTPUT**

The AF signals from the DSP-A and DSP-B boards are applied to the AF switch (MAIN unit: IC101, pin 6 for DSP-A, pin 7 for DSP-B), and pass through the SQL switch (Q101) which is controlled by “SQLS” signal. The signals are applied to the buffer amplifier (IC102, pin 5), and are then amplified at the VCA (Voltage Control Amplifier) circuit (IC105, pin 1). The amplified signals from VCA circuit from pin 4 are applied to the AF power amplifier (IC140, pin 2) to obtain the suitable driving level for speaker. The output signals from pin 12 pass through the mute switch (Q141, RL140), and are then applied to the SUB speaker jack (J141).

**• AF AMPLIFIER CIRCUIT**

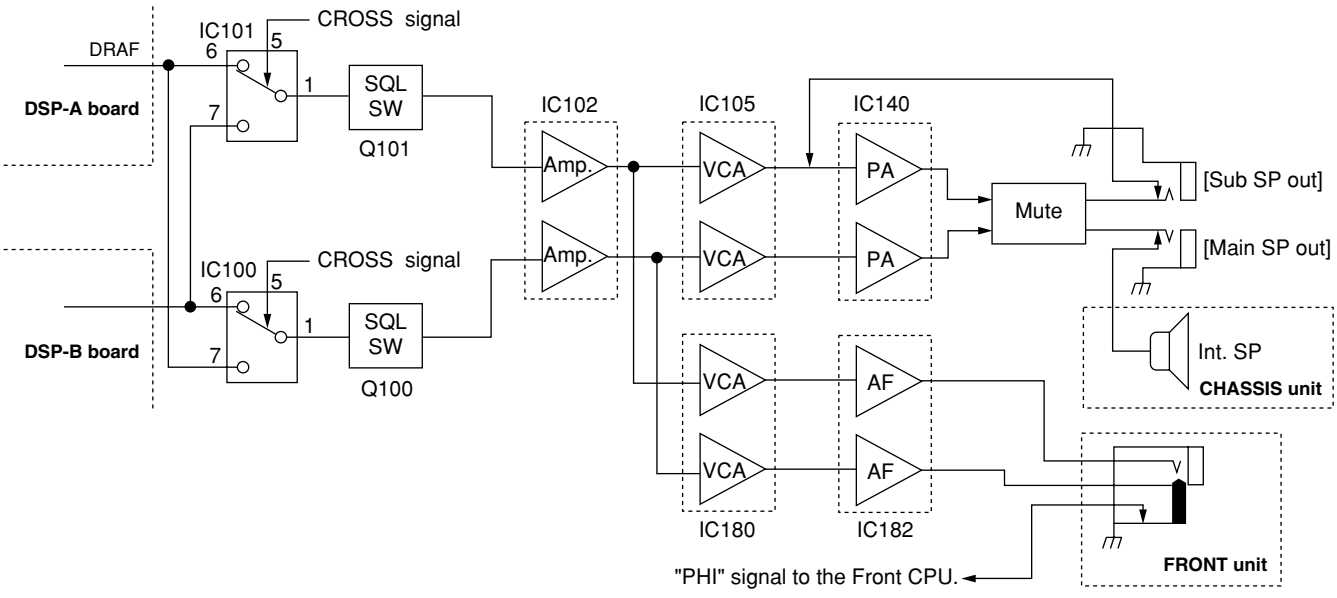

### 3-1-9 AGC CIRCUIT (RXPLL-A AND RXPLL-B UNITS AND DSP-A AND DSP-B BOARDS)

The AGC (Automatic Gain Control) circuit reduces IF amplifier gain and attenuates IF signal to keep the audio output at a constant level.

**• RX-A CIRCUIT (RXPLL-A UNIT AND DSP-A BOARD)**

A part of signals from the compositor circuit (RXPLL-A unit; IC1505, pin 8) are applied to the AGC detector circuit (IC1652, D1653), and are then amplified at the AGC amplifier (RXPLL-A unit; IC1653, pin 3). The amplified signals are applied to the DSP-A board via the J921, pin 1 on the DSP-A board as "AGCDET_A" line.

The amplified signals are applied to the amplifier (DSP-A board; IC501, pin 2), and are then applied to the A/D converter (DSP-A board; IC401, pin 25). The converted digital signals are applied to the DSP IC (DSP-A board; IC1), and then applied to the D/A converter (DSP-A board; IC771). The converted analog signals are amplified at the AGC amplifier (DSP-A board; IC501, pin 5), and are then applied to the MAIN unit via the J921, pin 6 as "AGCOUT_A" line.

The amplified signals are applied to the RXPLL-A unit via the J1701, pin 9 as "DAGC" line after being passed through the J400, pin 8 on MAIN unit as "AGC1A" line. The applied signals are amplified at the AGC amplifier (RXPLL_A unit; IC1653, pin 5), and are then applied to the IF amplifier (RXPLL-A unit; Q1403) as AGC signal.

**• RX-B CIRCUIT (RXPLL-B UNIT AND DSP-B BOARD)**

A part of signals from the compositor circuit (RXPLL-B unit; IC1505, pin 8) are applied to the AGC detector circuit (IC1652, D1653), and are then amplified at the AGC amplifier (RXPLL-B unit; IC1653, pin 3). The amplified signals are applied to the DSP-B board via the J921, pin 1 on the DSP-B board as "AGCDET_B" line.

The amplified signals are applied to the amplifier (DSP-B board; IC501, pin 2), and are then applied to the A/D converter (DSP-B board; IC401, pin 25). The converted digital signals are applied to the DSP IC (DSP-B board; IC1), and then applied to the D/A converter (DSP-B board; IC771). The converted analog signals are amplified at the AGC amplifier (DSP-B board; IC501, pin 5), and are then applied to the MAIN unit via the J921, pin 6 as "AGCOUT_B" line.

The amplified signals are applied to the RXPLL-B unit via the J1701, pin 9 as "DAGC" line after being passed through the J400, pin 8 on MAIN unit as "AGC1B" line. The applied signals are amplified at the AGC amplifier (RXPLL_B unit; IC1653, pin 5), and are then applied to the IF amplifier (RXPLL-B unit; Q1403) as AGC signal.

## 3-2 TRANSMITTER CIRCUITS

### 3-2-1 MICROPHONE AMPLIFIER CIRCUIT (MAIN UNIT)

The microphone amplifier circuit amplifies microphone audio signals to a level needed for the DSP circuit.

Audio signals from [MIC] connector (MIC board; J1, pin 1) are amplified at the audio amplifier section in IC821 (pin 2), then applied to the VCA section. The gain controlled signals are output from (IC821, pin 4) and passed through the analog switch (IC201, pins 1, 7). The signals pass through the analog switch (IC460, pins 1, 6), and are then applied to the DSP circuit after being passed through the limiter amplifier (IC230, pins 1, 3) as the "AFIN" signal.

The VCA section in IC821 controls microphone input gain according to [MIC GAIN] control level using the MIGV signal coming from the main CPU via the I/O expander (IC330, pin 2).

### 3-2-2 DSP TRANSMITTER CIRCUIT (DSP-TX BOARD)

The DSP (Digital Signal Processor) circuit enables digital IF filter, digital noise reduction, digital PSN (Phase Shift Network)/Low Power/Phase demodulation, digital automatic notch, and etc.

The AF signals from the limiter amplifier (MAIN unit; IC230, pin 1) are then applied to the buffer amplifiers (IC301; pins 2, 6, IC341, pins 2, 6, IC371, pins 2, 6) to convert to balancing signal. The signals are applied to the A/D convertor (IC401, pins 4, 5).

The converted digital signals are applied to the DSP IC (IC1) to do filtering, modulate and so on. The modulated signals are applied to the D/A converter (IC551) to convert into a 36 kHz IF signal.

**• DSP TRANSMITTER CIRCUIT**

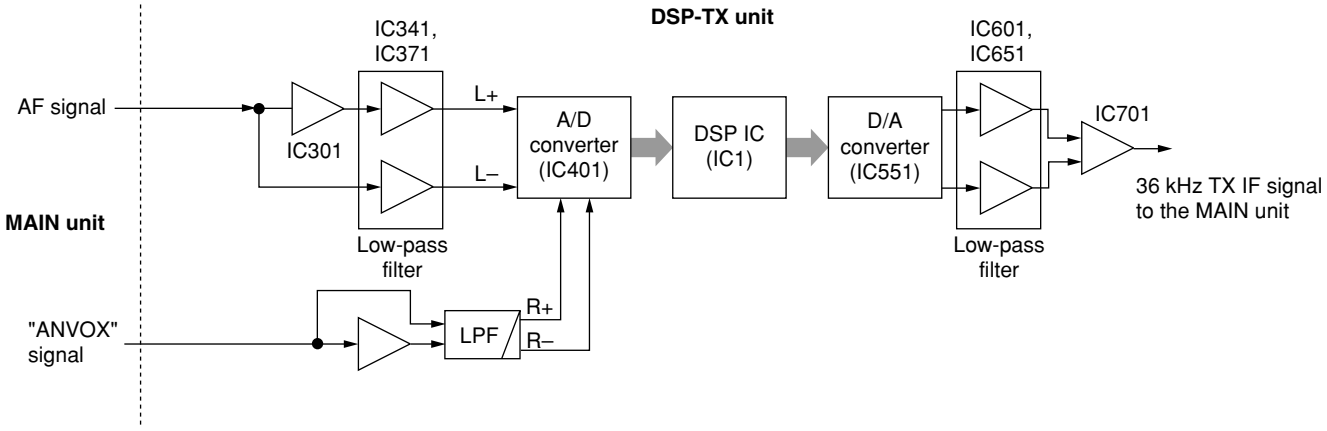

The converted analog IF signal passes through the low-pass filter (IC601, pins 3, 6, IC651, pins 3, 6), and is then applied to the IF amplifier (IC701, pins 2, 3) to convert to unbalancing IF signal.

The 36 kHz IF signal from the IF amplifier (pin 6) is applied to the 3rd mixer circuit.

### 3-2-3 3RD MIXER CIRCUIT (MAIN UNIT)

The modulated 36 kHz IF signal from the DSP-TX board pass through the two low-pass filters (IC501, pins 3, 6, IC502, pins 3, 6), and is then applied to the 3rd mixer circuit (IC503, pin 3). The 36 kHz IF signal is mixed with 491 kHz 3rd LO signal (from RXPLL-A unit) to produce the 455 kHz 3rd IF signal.
The signal is amplified at the IF amplifier (Q501), and passes through the one of the ceramic bandpass filters (FI501; 20 kHz, FI502; 4 kHz). The filtered signal is amplified at the other IF amplifier (Q504), and is then applied to the 2nd mixer circuit via the attenuator (R545–R547).

### 3-2-4 2ND MIXER CIRCUIT (MAIN UNIT)

The 3rd IF signal from the 3rd mixer circuit is applied to the 2nd mixer circuit (D505). The applied 3rd IF signal is mixed with 64 MHz 2nd LO signal (from the RXPLL-A unit) to produce the 64.455 MHz 2nd IF signal.
The signal passes through the bandpass filter (FI503; Fc=64.455 MHz) to suppress unwanted signals, and is then applied to the IF amplifier (Q506). The 2nd IF signal is applied to the 1st mixer circuit.

### 3-2-5 1ST MIXER AND RF CIRCUITS (MAIN UNIT)

The 2nd IF signal from the 2nd mixer circuit is applied to the 1st mixer circuit (D506). The 1st IF signal is mixed with 1st LO signal (from the RXPLL-A unit) to produce the RF signal. The RF signal passes through the low-pass filter (L518, L519, C564–C568) and 3 dB attenuator (R578–R580). The signal is then applied to the RF amplifier and bandpass filter circuits.

### 3-2-6 RF AMPLIFIER AND BANDPASS FILTER CIRCUITS (MAIN UNIT)

The RF signal is amplified at the RF amplifier (Q508), and applied to the one of the 10 bandpass filters via the 5 dB attenuator (R575–R577).

The filtered signal is applied to the YGR amplifier (Q801), and passes through the 3 dB attenuator (R805–R807). The signal is applied to the power amplifier circuit via the J801.

### 3-2-7 POWER AMPLIFIER CIRCUIT (PA200W BOARD)

The signal from the attenuator (MAIN unit; R805–R807) passes through the 3 dB attenuator (R101–R103) via the J1, and is then amplified at the RF amplifier (Q101). The signal is applied to the pre-drive (Q201) and drive amplifier (Q301), and is then amplified at the power amplifier (Q401, Q402) to obtain 200 W output power.

The output signal is applied to the FILTER circuit via the J401.

### 3-2-8 FILTER CIRCUIT (FILTER UNIT)

The power amplified signal passes through the one of the 9 low-pass filters which is depended on the RF frequencies to suppress the unwanted frequency components. The filtered signal is applied to the CONTROL circuit via the J904.

### 3-2-9 CONTROL CIRCUIT (CTRL BOARD)

The filtered signal from the FILTER unit is applied to the SWR-DET circuit (D101, D102) to detect SWR level, and then passes through the P-DET (D151, D152) and R-DET circuit (D201, D202). The signal is applied to the T/R switch (RL251), and is then applied to (or bypass) the antenna tuner circuit (NETWORK board) via the antenna tuner selector switch (RL252, RL253).

The tuned signal from J252 (or bypass signal) passes through the CRNT DET circuit (D301, D302) to detect the driving current, and is then applied to the antenna switching circuit.

The detected signal at CRNT DET circuit is amplified at the amplifier (IC301, pin 3), and is then applied to the TUNER_CPU (IC1, pin 16).

### 3-2-10 ANTENNA SWITCHING CIRCUIT (ANT-SW UNIT)

The signal from the CTRL board is applied to the ANT-SW unit via the J1, and is applied to the one of the 4 relays (RL51, RL61, RL71, RL81). The signal is output from the one of the 4 antenna connectors, J51, J61, J71 or J81.

**• TRANSMITTER CONSTRUCTION**

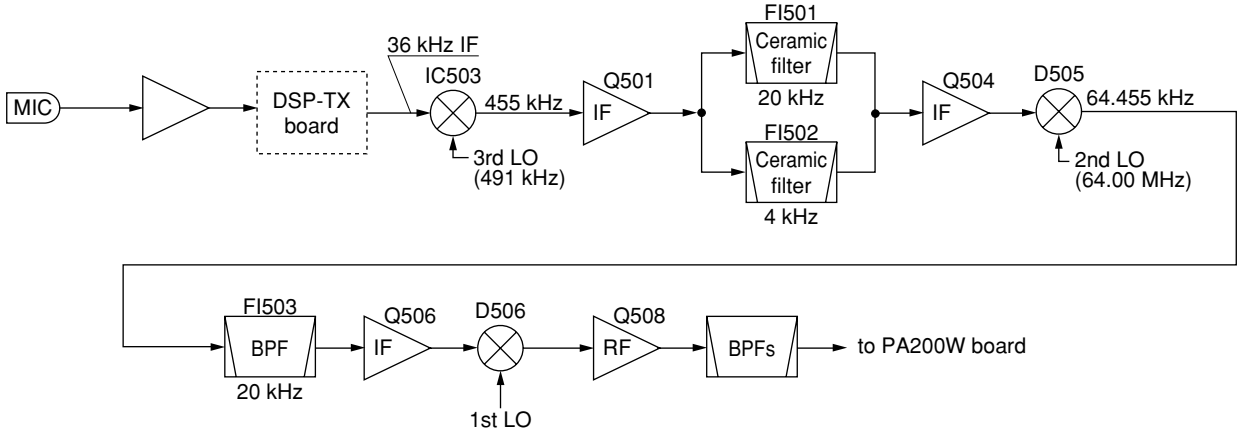

The antenna switching relays are controlled by the RL-CTRL CPU (IC11, pins 6, 9, 12, 15) as the “ANT1A”, “ANT2A”, “ANT3A” and “ANT4A” signals respectively.

### 3-2-11 ALC CIRCUIT (CTRL BOARD, LOGIC AND MAIN UNITS)

The ALC (Automatic Level Control) circuit controls the gain of IF amplifiers in order for the IC-7800 to output a constant RF power set by [RF PWR] control even when the supplied voltage shifts, etc.

The RF power level is detected at one of the SWR detector circuits (CTRL board; D102) to be converted into DC voltage and applied to the MAIN unit as the FORV signal via the LOGIC unit.

The FORV signal from the LOGIC unit is applied to the comparator (MAIN unit; IC60, pin 2). The POCV signal, controlled by [RF POWER] control via the I/O expander (MAIN unit; IC330, pin 4), is also applied to the other input (pin 3) for reference. The compared signal is output from pin 1 and applied to the IF amplifiers (MAIN unit; Q504, Q506) to control amplifying gain.

When the FORV signal exceeds the POCV voltage, ALC bias voltage from the comparator controls the IF amplifiers. This adjusts the output power to a specified level from [RF POWER] control until the FORV and POCV voltages are equalized.

In AM mode, the comparator operates as an averaging ALC amplifier. Q61 (MAIN unit) turns ON and shift the POCV voltage to adjust the TX output power for 50 W (maximum) through R82.

The ALC bias voltage is also applied to the ALC meter amplifier (MAIN unit; IC61, pin 9) to obtain an ALC meter signal (ALCL). The amplified signal is applied to the main CPU2 (LOGIC unit; IC604, pin 115) to drive the S/RF meter via the front CPU (IC6) on the DISPLAY board.

An external ALC input from [ALC] jack, [ACC1] or [ACC2] sockets is applied to the ALC amplifier (Q62). External ALC operation is identical to that of the internal ALC.

The FORV signal is also applied to the power meter amplifier (LOGIC unit; IC851, pin 5). The amplified signal is applied to the main CPU2 (LOGIC unit; IC604, pin 113) to drive the S/RF meter as an FORL signal when the power meter is selected.

### 3-2-12 APC CIRCUIT (MAIN UNIT, CTRL AND PA200W BOARDS)

The APC (Automatic Power Control) circuit protects the power amplifiers on the PA 200W board from high SWR and excessive current.

The reflected wave signal appears and increases when the connected antenna is mismatched to 50 Ω. The SWR detector (CTRL board; D101) detects the reflected signal, and applies it to the APC circuit (MAIN unit; IC60, pin 13) as a REFV signal via the LOGIC unit.

When the REFV signal level increases, the APC circuit decreases the ALC voltage to activate the APC.

For the current APC, the power transistor current is obtained by detecting the voltages (IDH and IDL) which appear at both terminals of the ID detector (PA200W board; R521–R523). The detected voltages are applied to the differential amplifier (IC60, pins 5, 6). When the current of transistors is increased, the amplifier controls the ALC line to prevent excessive current flow.

### 3-2-13 TEMPERATURE PROTECTION CIRCUIT (PA200W BOARD)

The cooling fan (CHASSIS; MF1) is activated while transmitting or when the temperature of the power amplifier exceeds the preset value. The temperature protection circuit consists of IC604, IC330, IC821, Q821, Q822 and R3.

While transmitting, IC821 and Q821 are turned ON, and provide a voltage to the cooling fan to rotate at medium speed. The thermistor (R3) detects the temperature of the power amplifiers (Q401, Q402). The detected signal is applied to the CPU (IC604, pin 118) to analyze the power amplifier’s temperature via “THML” signal. The signal is applied to the D/A converter (IC330), and is then applied to the FAN controller (IC821, pin 1, Q821, Q822) via “FANI” signal. The control signal outputs from the controller (IC821, pin 7) as “FANV” signal, and then controls cooling fan via the J824.

## 3-3 PLL CIRCUITS

### 3-3-1 GENERAL

The PLL circuits consist of OSC, RXPLL-A and RXPLL-B units.

The OSC unit oscillates 10 MHz reference frequency for RXPLL-A, RXPLL-B units and external reference frequency.

The RXPLL-A unit oscillates 6 LO frequencies for the RX-A unit’s receive 1st and 2nd LO frequencies, MAIN unit’s transmit 1st, 2nd and 3rd LO frequencies, marker frequency.

The RXPLL-B unit oscillates 6 LO frequencies for the RX-B unit’s receive 1st and 2nd LO frequencies, SCOPE unit’s reference frequency, clock signal of DSP-TX, DSP-A and DSP-B board.

1st and 2nd LO frequency lists for RX, 3rd IF and LO frequency lists and 2nd IF and LO frequency list are shown at page 3-28.
1st IF and 1st LO frequency lists for TX are shown at page 3-29.

### 3-3-2 OSCILLATOR CIRCUIT (OSC UNIT)

The reference oscillator (IC91, X1) generates a 10 MHz frequency which field intensity is 0 dBm. The signal is used for the RXPLL-A and RXPLL-B unit’s system clock, etc.

**• IN CASE OF USING AS RXPLL-A AND RXPLL-B UNIT’S SYSTEM CLOCK**

The oscillated signal is amplified at the buffer amplifier (Q21), and is the applied to the amplifier (Q22). The amplified signal passes through the oscillated signal selector (RL11), and is then amplified at the buffer amplifier (Q70). The amplified signal is applied to the RXPLL-A and RXPLL-B units via the J72 and J73, respectively.

**• IN CASE OF USING REFERENCE SIGNAL TO EXTERNAL**

The oscillated signal is amplified at the buffer amplifier (Q21), and is then applied to the amplifier (Q42). The amplified signal is applied to the input-output switch (RL10) via the low-pass filter (L43, L44, C46–C51), and is then output from J71 after being passed through the 6 dB attenuator (R71–R73).

**• IN CASE OF USING REFERENCE SIGNAL FROM EXTERNAL**

The reference signal from the external equipment is applied to the J71, and is then applied to the input-output switch (RL10) via the 6 dB attenuator (R71–R73). The signal is applied to the amplifier (Q61, Q62), and passes through the bandpass filter (L61, L62, C66). The filtered signal is applied to the reference signal switch (RL11), and is then amplified at the buffer amplifier (Q70). The amplified signal is applied to the RXPLL-A and RXPLL-B units via the J72 and J73, respectively.

## 3-3-3 RXPLL-A CIRCUIT (RXPLL-A UNIT)

The 10 MHz oscillated signal from the OSC unit is applied to the amplifier (Q30) via the J10, and is then amplified at the quadrupler (Q702) to produce 40 MHz reference signal. The amplified signal passes through the bandpass filter (L702, L703, C709–C713), and is then applied to the 1st LO, maker, 2nd LO and 3rd LO circuits, respectively.

**• 1ST LO CIRCUIT**

The 40 MHz reference signal is applied to the amplifier (Q104) via the "40M" line, and is then applied to the DDS IC (IC101, pin 88) as the system clock signal. The output signals from pins 7–20 pass through the D/A convertor (R110–R133). The converted signal passes through the ceramic filter (FI101) to pass the 10.5 MHz signal, and is then applied to the amplifier (IC102, pin 2). The amplified signal is applied to the DDS IC (IC101, pin 47) again, and is then applied to the phase detector section of the DDS IC. The signal which outputs from the DDS IC (IC101, pin 56) passes through the loop filter (L151, C152–C155), and is then applied to the oscillator circuit (Q150). The circuit oscillates 10.4122038–10.4963312 MHz signal.
The oscillated signal is applied to the amplifier (Q151), and is then applied to the PLL IC (IC201).

A part of the oscillated signal is fed back to the DDS IC (IC101, pin 46) via the amplifier (Q152) as the comparison signal.

The amplified signal from Q151 is applied to the PLL IC's 1/21 divider section (IC201, pin 8), and is then applied to the PLL section. The signal outputs from pin 2, and passes through the loop filter (L211, C221, C222). The filtered signal is applied to the one of the 6 VCOs as follow.

**RXPLL-A 1ST LO VCO TABLE**

| VCO No. | Parts No. | Oscillating frequencies |
|---|---|---|
| 1 | Q220 | 64.485–72.454999 MHz |
| 2 | Q230 | 72.455–79.454999 MHz |
| 3 | Q240 | 79.455–86.454999 MHz |
| 4 | Q250 | 86.455–94.454999 MHz |
| 5 | Q260 | 94.455–109.454999 MHz |
| 6 | Q270 | 109.455–124.455 MHz |

The oscillated signal is amplified at the buffer amplifier (Q301), and passes through the high-pass (L331, C331–C333) and low-pass (D341, L332, C334–C337) filters. The filtered signal is applied to the amplifier (Q302).

A portion of buffer amplified signal from Q301 is fed back to the PLL IC's 1/N (N=130–250) divider section (IC201, pin 6) via the buffer amplifier (Q303).

The amplified signal from Q302 is applied to another amplifier (Q351), and is then amplified at the buffer amplifier (Q352). The signal passes through the low-pass (D441, L441, L442, C442–C446) and high-pass (L451, C447, C451, C452) filters and attenuator (R364–R366), and is then output from J351/J421 as the RX 1st LO signal (64.485–124.455 MHz)/TX 1st LO signal (64.485–124.455 MHz) to the TX/RX-A circuits respectively via the LO switches (D421, D422).

**• MARKER CIRCUIT**

The 40 MHz reference signal is applied to the amplifier (Q104) via the "40M" line, and is then applied to the DDS IC (IC101, pin 88) as the system clock signal.
The signal passes through the DDS IC's 1/400 divider section, and outputs from the IC (pin 49). The signal is applied to the marker switch (IC602, pin 1), and is then output from the IC (pin 4) as the 100 kHz marker signal.

**• 2ND LO CIRCUIT**

The 40 MHz reference signal is applied to the amplifier (IC503) via the "40M" line, and is then applied to the DDS IC (IC501, pin 88) as the system clock signal. The signals which are output from pins 6–20 are applied to the D/A convertor (R510–R533), and then passes through the low-pass filter (L530–L532, C531–C536) to suppress more than 4.5 MHz signals. The filtered signal (4.0–4.0306875 MHz) is applied to the amplifier (IC502, pin 2), and is then applied to the DDS IC's phase detector section (IC501, pin 47). The output signal from pin 56 passes through the loop filter (D542, L541, C543, C543–C547, R548, R554), and is then applied to the oscillator circuit (Q541) to oscillate the 64 MHz reference signal.

The 64 MHz signal is applied to the buffer amplifier (Q561) and the hybrid divider and then applied to the TX or RX 2nd LO circuits.

A portion of 64 MHz signal passes through the attenuator (R571, R572), and is then applied to the amplifier (Q580). The amplified signal is applied to the DDS IC's quarter detector section (IC501, pin 80) as the comparison signal.

**(1) TX 2ND LO CIRCUIT**

The signal from the hybrid divider passes through the attenuator (R587–R589), and is then applied the amplifier (Q591). The signal passes through the bandpass filter (L565, L566, C573–C575) to suppress unwanted signals, and is then applied to the TX 2nd mixer circuit (RX-A unit; D505) via the J561.

**(2) RX 2ND LO CIRCUIT**
The signal from the hybrid divider passes through the attenuator (R802, R803), and is then applied to the amplifier (Q801). The signal passes through the attenuator (R805–R807), and is then applied to the mixer circuit (D821) to mix with TX 3rd LO signal. The mixed signal passes through the attenuator (R831–R833) and bandpass filter (FI831), and is then applied to the amplifier (Q831). The signal passes through the attenuator (R836–R838), and is then applied to the LO (Q1651) and buffer (IC1651, pins 9, 10) amplifiers. The amplified signal is applied to the buffer amplifier (IC1651, pins 1, 2), and is then applied to the 2nd mixer circuit (IC1501, pin 1) as 2nd LO signal.

A part of amplified signal from buffer amplifier (IC1651, pin 8) passes through the 90 degrees phase inversion circuit (L1652, C1655 and C1656), and is then amplified at the buffer amplifier (IC1651, pins 4, 5). The amplified signal is applied to the 2nd mixer circuit (IC1502, pin 1) as 2nd LO signal.

**• TX 3RD LO CIRCUIT**
The 40 MHz reference signal is applied to the amplifier (Q652) via the "40M" line, and is then applied to the DDS IC (IC651, pin 7) as the system clock signal. The signals which are output from pins 13–22 are applied to the D/A convertor (R661–R671, R673–R681), and then passes through the low-pass filter (L681, L682, C680–C685) to suppress more than 0.5 MHz signals. The signal is amplified at the buffer amplifier (Q680), and passes through the attenuator (R690–R692). The signal is applied to the TX 3rd mixer circuit (MAIN unit; IC503, pin 1) via the J681.

## 3-3-4 RXPLL-B CIRCUIT (RXPLL-B UNIT)
The 10 MHz oscillated signal from the OSC unit is applied to the amplifier (Q30) via the J10, and is then amplified at the quadrupler (Q702) to produce 40 MHz reference signal. The amplified signal passes through the attenuator (R708–R710), and is then applied to the 1st LO, 2nd LO, DSP system clock and scope unit system clock circuits, respectively.

**• 1ST LO CIRCUIT**
The 40 MHz reference signal is applied to the amplifier (Q104) via the "40M" line, and is then applied to the DDS IC (IC101, pin 88) as the system clock signal. The output signals from pins 7–20 pass through the D/A convertor (R110–R133). The converted signal passes through the ceramic filter (FI101) to pass the 10.7 MHz signal, and is then applied to the amplifier (IC102, pin 2). The amplified signal is applied to the DDS IC (IC101, pin 47) again, and is then applied to the phase detector section of the DDS IC. The signal which outputs from the DDS IC (IC101, pin 56) passes through the loop filter (D152–D154, L151, C152–C155), and is then applied to the oscillator circuit (Q150). The circuit oscillates 10.5813219–10.7408384 MHz signal.
The oscillated signal is applied to the amplifier (Q151), and is then applied to the PLL IC (IC201).

A part of the oscillated signal is fed back to the DDS IC (IC101, pin 46) via the amplifier (Q152) as the comparison signal.

The amplified signal from Q151 is applied to the PLL IC's 1/21 divider section (IC201, pin 8), and is then applied to the PLL section. The signal outputs from pin 2, and passes through the loop filter (L221, C221, C222). The filtered signal is applied to the one of the 6 VCOs circuits as follow.

**RXPLL-B 1ST LO VCO TABLE**

| VCO No. | Parts No. | Oscillating frequencies |
|---|---|---|
| 1 | Q220 | 64.585–72.554999 MHz |
| 2 | Q230 | 72.555–79.554999 MHz |
| 3 | Q240 | 79.555–86.554999 MHz |
| 4 | Q250 | 86.555–94.554999 MHz |
| 5 | Q260 | 94.555–109.554999 MHz |
| 6 | Q270 | 109.555–124.555 MHz |

The oscillated signal is amplified at the buffer amplifier (Q301), and passes through the high-pass (L331, C331–C333) and low-pass (D341, L332, C334–C337) filters. The signal is applied to the amplifier (Q302).

A portion of buffer amplified signal from Q301 is fed back to the PLL IC's 1/N (N=130–250) divider section (IC201, pin 6) as the comparison signal via the buffer amplifier (Q303).

The amplified signal from Q302 is applied to another amplifier (Q351), and is then amplified at the buffer amplifier (Q352). The signal passes through the low-pass filter (D441, L441, L442, C441–C446) and attenuator (R364–R366), and is then output from J351 as the RX 1st LO signal (64.585–124.555 MHz) to the RX-B circuit.

**• 2ND LO CIRCUIT**
The 40 MHz reference signal is applied to the amplifier (Q503) via the "40M" line, and is then applied to the DDS IC (IC501, pin 88) as the system clock signal. The signals which are output from pins 6–20 are applied to the D/A convertor (R510–R533), and then passes through the low-pass filter (L530–L532, C531–C536) to suppress more than 4.5 MHz signals. The filtered signal (4.0–4.0369735 MHz) is applied to the amplifier (IC502, pin 2), and is then applied to the DDS IC's phase detector section (IC501, pin 47). The output signal from pin 56 passes through the loop filter (D542, L541, C543, C543–C547, R548, R554), and is then applied to the oscillator circuit (Q541) to oscillate the 64.591 MHz reference signal.

The 64.591 MHz signal is amplified at the buffer amplifier (Q561), and is then applied to the hybrid divider.

A portion of 64.591 MHz signal passes through the attenuator (R571, R572), and is then applied to the amplifier (Q580). The amplified signal is applied to the DDS IC's quarter detector section (IC501, pin 80) as the comparison signal.

The 64.591 MHz signal from the hybrid divider passes through the attenuator (R587–R589), and is then applied to the amplifier (Q591). The amplified signal passes through the bandpass filter to suppress unwanted signals, and is then applied to the RX 2nd mixer circuit (IC1501, IC1502) as 2nd LO signal via the J561.

## • DSP SYSTEM CLOCK CIRCUIT

The 40 MHz reference signal is applied to the amplifier (IC652) via the "40M" line, and is then applied to the DDS IC (IC651, pin 7) as the system clock signal. The signals which are output from pins 14–22 are applied to the D/A convertor (R661–R671, R673–R681), and then passes through the low-pass (L681, L682, C680–C685) and high-pass (L683, C686–C688) filters to suppress unwanted signals. The filtered signal is amplified at the buffer amplifier (Q680), and passes through the attenuator (R690–R692). The signal is applied to the DSP IC for TX (DSP-TX board; IC1), RX-A (DSP-A board; IC1) and RX-B (DSP-B board; IC1) as 12.288 MHz system clock signal via the A/D converters.

## • RXPLL-A/B CIRCUITS

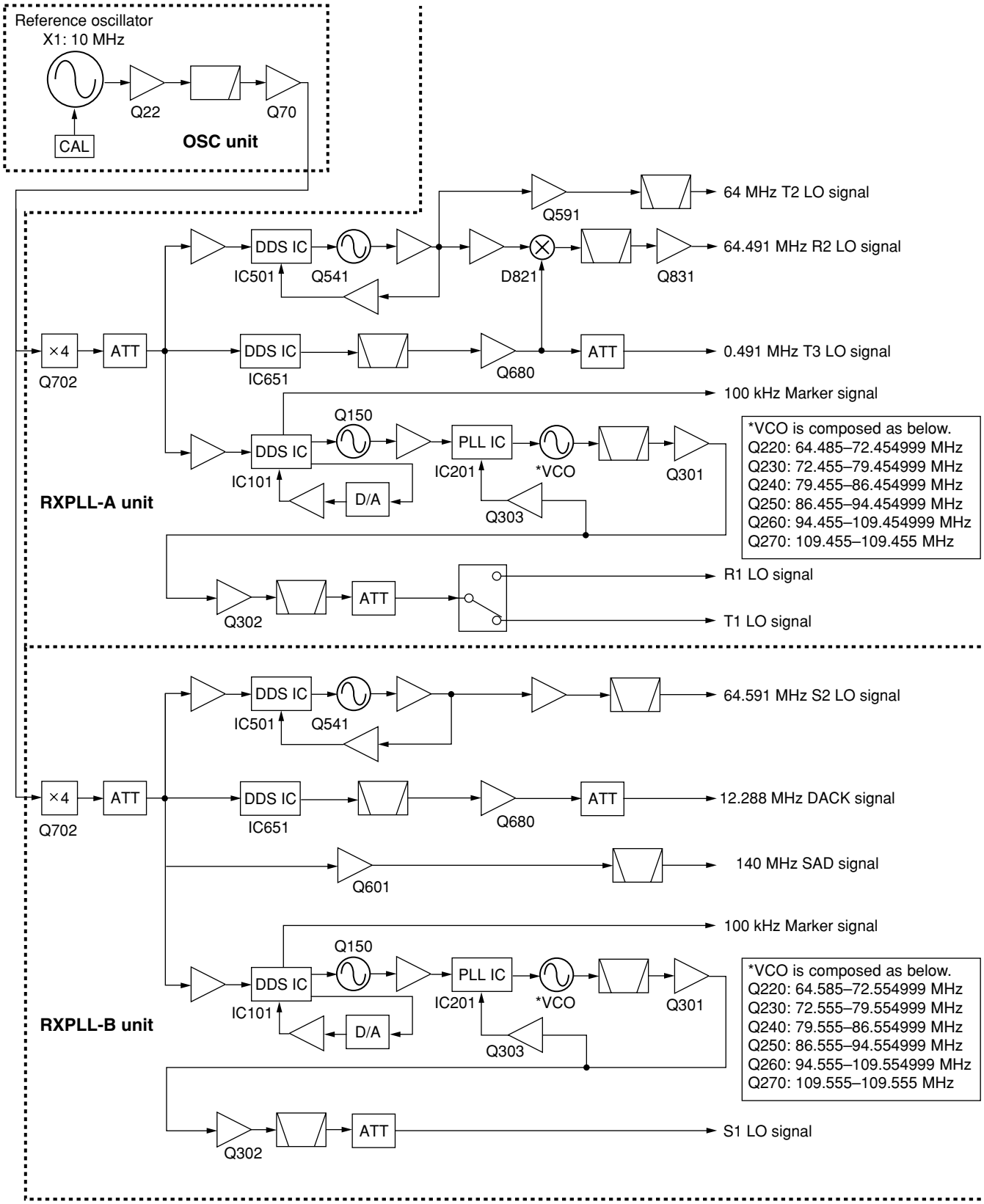

**• SCOPE UNIT SYSTEM CLOCK CIRCUIT**
The 40 MHz reference signal is amplified at the buffer amplifier (Q601) via the “40M” line, and then passes through the low-pass filter (L602, L603, C609–C613). The filtered signal is applied to the buffer amplifier (SCOPE unit; Q701) as the 40 MHz system clock via the J601.

## 3-4 ANTENNA TUNER CIRCUITS

### 3-4-1 MATCHING CIRCUIT (NETWORK BOARD)

The matching circuit is a T-network. Using 2 tuning motors, the matching circuit obtains rapid overall tuning speed.

Using relays (RL50, RL60, RL70, RL80, RL90, RL100, RL110, RL120), the relay control signals from the antenna tuner CPU (CTRL board; IC1) via the buffer amplifier (IC402) ground one of the taps of L50, L60, L70, L80, L90, L100, L110, L120. After selecting the coils, 2 motors (TUNER unit; MF1, MF2) adjust C1 and C2 using the antenna tuner CPU (CTRL board; IC1) and the motor controller (CTRL board; Q3–Q10, D3–D6) to obtain a low SWR (Standing Wave Ratio).

### 3-4-2 DETECTOR CIRCUIT (CTRL BOARD)

**(1) SWR DETECTOR**
Forward and reflected power are picked up by a current transformer (L101), detected by D101 and D102, and then amplified at IC101, pin 3 and pin 5, respectively. The amplified voltages are applied to the antenna tuner CPU (IC1, pins 2, 3) via “AN0” and “AN1” lines. The tuner CPU detects the SWR.

**(2) REACTANCE COMPONENTS DETECTOR**
Reactance components are picked up by comparing the phases of the RF current and RF voltage. The RF current is detected by L151 and R151–R154 and buffer-amplified at IC151, pin 13 and IC154, pin 1 and then applied to the phase comparator (IC156, pin 1). RF voltages are detected by C151–C153, C158 and then applied to the phase comparator (IC156, pin 13) after being amplified at the buffer amplifiers (IC151, IC153). The output signal from the phase comparator (IC156, pin 6 for RF current, IC156 pin 7 for RF voltage) is rectified at D154 and D153 for conversion into DC voltage. The rectified voltage signals are combined, then amplified at the differential amplifier (IC201, pin 2), then applied to the antenna tuner CPU (IC1, pin 64) via the “AN3” line.
A C-MOS IC is used for the buffer amplifier (IC151) to improve functionable sensitivity; the differential amplifier (IC201) is very responsive even with a low signal level input. Together, these ensure quick and stable signal detection even at low RF signal level input.

**(3) RESISTANCE COMPONENTS DETECTOR**
Resistance components are picked up by L201, and detected by D201, D202 and Q201. The detected resistance components are amplified at the differential amplifier (IC201, pin 6), and then applied to the antenna tuner CPU (IC1, pin 1) via the “AN2” line.

### 3-4-3 MOTOR CONTROL CIRCUIT (CTRL BOARD AND TUNER UNIT)

The control circuit of the internal antenna tuner consists of the CPU, EEPROM (Electronically-Erasable Programmable Read Only Memory), tuning motors and tuning relays.

**(1) CPU AND EEPROM (CTRL BOARD)**
The antenna tuner CPU (IC1) controls the tuning motors via the motor controller (Q3–Q10, D3–D6) and tuning relays, and memorizes the best preset position in 100 kHz steps. The memory contents are stored in the EEPROM (IC2) without a backup battery.

**(2) TUNING MOTORS (CTRL BOARD)**
A motor controller (Q3–Q10 D3–D6) rotates the tuning motors (TUNER unit; MF1, MF2) to obtain a low SWR.

**(3) TUNING RELAYS (TUNER UNIT)**
According to the operating frequency band and antenna condition, tuning relays select the capacitors and coils.

### 3-4-4 ANTENNA TUNER CPU PORT ALLOCATION (CTRL BOARD; IC1)

| Pin number | Port name | Description |
|---|---|---|
| 1 | AN2 | Input port for the resistance components detection voltage. |
| 2 | AN1 | Input port for the reflected RF power voltage. |
| 13 | IKEY | Outputs tuner data signal. |
| 15 | IKEYB | Input port for the serial signal. |
| 17 | THRU | Input port for [TUNER] ON/OFF signal. |
| 21 | TRC | Input port for the TX/RX switching signal. |
| 22, 23 | #CL1, CL2 | Input port for the antenna tunner CPU system clock. |
| 26 | VHF | Outputs the coil selection signal.<br>High : While 46–60 MHz band is displayed. |
| 27–32 | L24M, L18M, L14M, L10M, L7M, L3.5M | Output the coil selection signal. |
| 34–40 | CO3, CO2, CO1, CI3, CI2, CI1 | Output the capacitor selection signal. |
| 41–48 | AZ, AY, AX, AW, PZ, PY, PX, PW | Output pulse-type control signals for the tuning motors (MF1, MF2). |
| 64 | AN3 | Input port for the reactance components detection voltage. |

# 3-5 SCOPE CIRCUITS

## 3-5-1 SCOPE RECEIVER CIRCUIT (SCOPE UNIT)

A portion of the 64.455 MHz 1st IF signal from the 1st mixer circuit (RXPLL-A/B units; IC1051, Q1211, Q1212: while receiving) or IF amplifier (MAIN unit; Q506: while transmitting) passes through the switches (IC1, IC31). The switched signal is passed through the PIN attenuator (D1, D2), low-pass filter (L13, L14, C42–C46) and bandpass filter (L5, L6, C11–C13, C41) and then amplified at the IF amplifiers (Q2). The amplified signal is mixed with the 18.455–20.455 MHz scope 2nd LO (S2LO) signal at the mixer circuit (D101) to produce the 45 MHz IF signal. The mixed IF signal is passed through the ceramic bandpass filter (FI201) to suppress unwanted signals. The filtered IF signal is applied to other mixer (D4) after amplifying at 2 amplifiers (Q201, Q202). The signal is applied to the amplifier (IC401, pin 6), and then passes through the low-pass filter (IC403, pins 1, 6). The filtered signal is amplified at the amplifier (IC404, pin 6), and is then applied to the DSP IC (IC601) via the A/D converter (IC501, pin 43). The DSP IC analyzes digital signals, and then outputs digital data to the CPU.

## 3-5-2 SCOPE UNIT AGC CIRCUIT (SCOPE UNIT)

A pert of the filtered signal at the low-pass filter (IC403, pin 1) is applied to the amplifier (IC404, pin 6). The amplified signal is applied to the AGC detector (D401, D402), and is then applied to the AGC amplifier (IC405, pin 2). The amplified signal is applied to the comparator section to compare with “ATTV” signal. The signal is amplified at the AGC amplifier (Q1), and is then applied to the PIN attenuator (D1, D2) to keep same gain.

## 3-5-3 SWEEP LO CIRCUIT (SCOPE UNIT)

The 40 MHz signal is applied to the J3 from the RXPLL-B unit. The signal is used for reference system clock of each circuits.

### (1) S2 LO CIRCUIT

The 40 MHz reference system clock is amplified at the amplifiers (Q701 and Q720). The amplified signal is applied to the 14 bits DDS IC (IC820, pin 62). The DDS IC which is controlled by the CPU outputs 19.555 MHz (for MAIN RX) or 19.555±0.5 MHz (for SUB RX) system clock from pin 45, and then passes through the low-pass filter (L761–L763, C761–C767), high-pass filter (L764, C768–C770) and attenuator (R764–R766). The attenuated signal is applied to the LO amplifier (Q101), and then passes through the low-pass filter (L104, C108–C110) and attenuator (R105–R107). The attenuated signal is applied to the mixer circuit (D101) as S2 LO signal (19.555–20.455 MHz).

### (2) S3 LO CIRCUIT

The 40 MHz reference system clock is amplified at the amplifiers (Q701, Q810). The amplified signal is applied to the PLL IC (IC801, pin 8). The applied signal passes through the 1/400 divider and phase detector circuits of the IC, and is then applied to the VCO circuit (Q821) via the loop filter to produce 44.8 MHz signal. The 44.8 MHz signal is amplified at the buffer amplifiers (Q841–Q843), and then passes through the low-pass filter (L851, L852, C852–C856) to suppress high-harmonics components. The filtered signal passes through the attenuator (R856–R858), and is then amplified at the amplifier (Q301). The signal passes through the other attenuator (R302–R304), and is then applied to the mixer circuit (D4) as S3 LO signal.

**• SCOPE CIRCUIT**

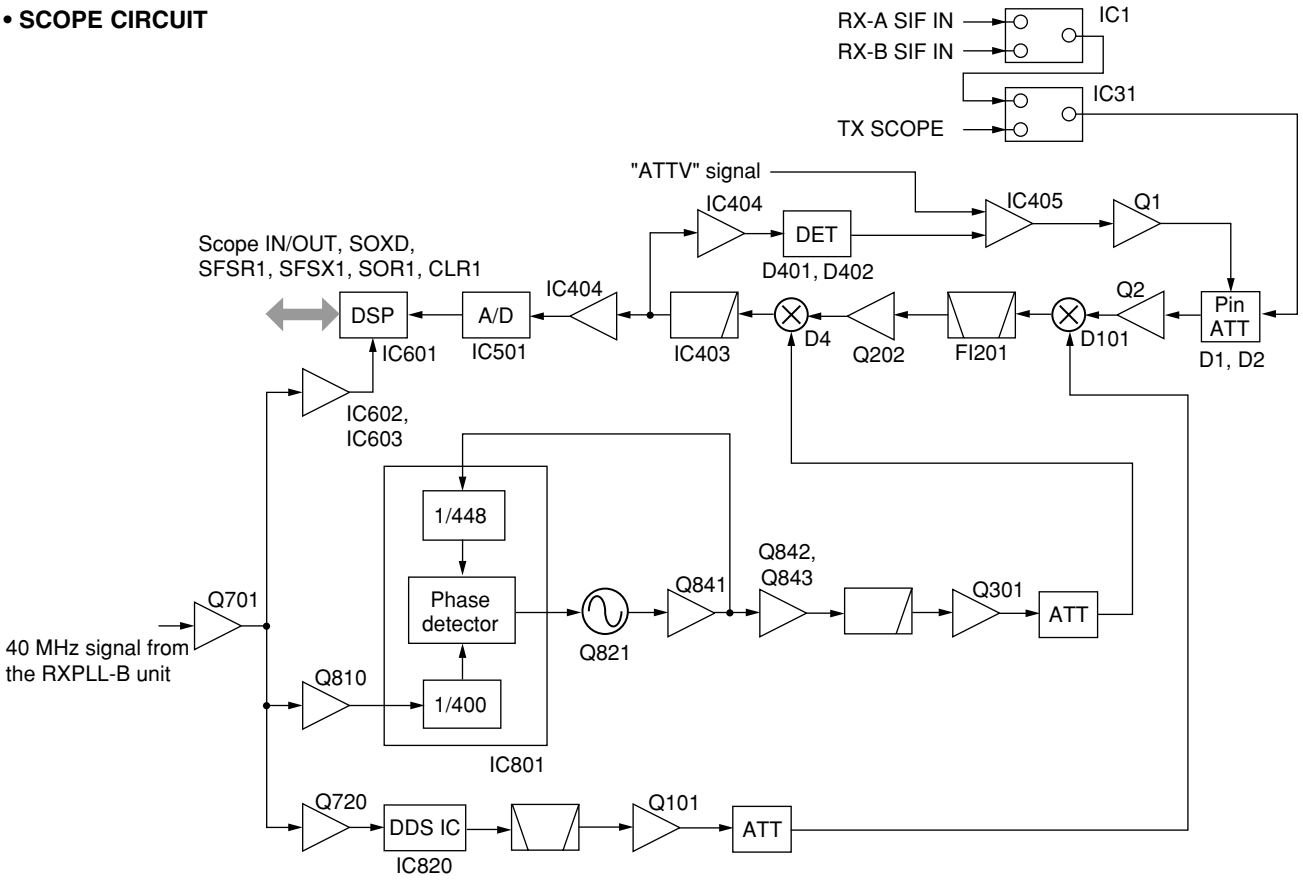

**(3) DDS LO CIRCUIT**

The 40 MHz reference system clock is amplified at the amplifiers (Q701, IC602, IC603), and is then applied to the DSP IC (IC601). The applied signal is quintupled in the IC, then uses 200 MHz DSP system clock signal.

The 200 MHz clock signal is divided 1/400, and then uses as the 500 kHz sampling frequency of the A/D converter (IC501).

## 3-6 POWER SUPPLY CIRCUITS

### 3-6-1 VOLTAGE LINES (DC-DC UNIT)

| LINE | DESCRIPTION |
|---|---|
| C15V | Common 15 V line from the REG unit. The voltage is applied to the LOGIC unit via the J3, pin 6. |
| H8V | Common 8 V from the REG unit. The signal is applied to the regulator circuits on the DC-DC unit. |
| +15V | The same voltage as the +15 line passed through the switching relay (RL142). The voltage is applied to the PA200W board (via J420, pins 1 and 2), LOGIC (via the J820, pins 4–6) and MAIN (via the J450, pin 3) units. |
| –12V | Common –12 V converted from the +15 V line and regulated by the –12V regulator circuit (IC121). The voltage is applied to the LOGIC (via the J820, pin 3) and MAIN (via the J450, pin 2) units. |
| VDD1R5 | Common 5 V converted from the H8V line and regulated by the VDD1R5 regulator circuit (IC101). The voltage is applied to the LOGIC unit via the J821, pin 2. |
| 5V | Common 5 V converted from the H8V line and regulated by the VDD5 regulator circuit (IC81). The voltage is applied to the LOGIC (via the J821, pin 4) and MAIN (via the J450, pin 10) units. |
| +8V | The same voltage as the H8V line passed through the switching relay (RL142). The voltage is applied to LOGIC (via the J820, pin 7) and MAIN (via the J450, pin 4) units. |
| +5V | Common 5 V converted from the +8V line and regulated by the +5V regulator circuit (IC61). The voltage is applied to the LOGIC (via the J820, pin 8) and MAIN (via the J450, pin 4) units. |
| +3R3V | Common 3 V converted from the +8V line and regulated by the +3R3V regulator circuit (IC41). The voltage is applied to the LOGIC (via the J820, pin 9) and MAIN (via the J450, pins 6–8) units. |
| VDD3R3 | Common 3 V converted from the H8V line and regulated by the VDD3R3 regulator circuit (IC21). The voltage is applied to the LOGIC unit via the J821, pin 3. |

# 3-7 PORT ALLOCATIONS

## 3-7-1 MAIN CPU2 PORT ALLOCATIONS (LOGIC UNIT; IC604)

| Pin number | Port name | Description |
|---|---|---|
| 5–9<br>11–17<br>19, 20 | H8_A0–A4<br>H8_A5–A11<br>H8–A12, A13 | Output address bus signals. |
| 21 | UNLKA | Input port for the PLL unlock signal from the RXPLL-A unit. |
| 22 | UNLKB | Input port for the PLL unlock signal from the RXPLL-B unit. |
| 23 | ECK | Outputs clock signal to the EEPROM. |
| 24 | EDT | I/O port for the data signal from/to the EEPROM. |
| 26 | DSCLA | Outputs clock signal to the EEPROM on the DIGISEL-A unit. |
| 27 | DSDAA | I/O port for the data signal from/to the EEPROM on the DIGISEL-A unit. |
| 28 | DSCLB | Outputs clock signal to the EEPROM on the DIGISEL-B unit. |
| 29 | DSDAB | I/O port for the data signal from/to the EEPROM on the DIGISEL-B unit. |
| 30 | RTKI | Input port for the RTTY keying signal. |
| 31 | TRVI | Input port for the transverter control signal from ACC jack on the rear panel. |
| 33 | SDAT | Outputs data signals to the DDS, PLL and DSP ICs on the SCOPE unit. |
| 34 | SST2 | Outputs strobe signal to the PLL IC on the SCOPE unit. |
| 35 | EXRL1 | Outputs external SEND relay (lead type) control signal.<br>High : The relay switches ON. |
| 36 | EXRL2 | Outputs external SEND relay (semiconductor type) control signal.<br>High : The relay switches ON. |
| 42 | PCK/CON0 | Outputs clock signal to the RXPLL-A/B ICs . |
| 43 | PDAT/CON1 | Outputs data signal to the RXPLL-A/B ICs. |
| 46 | PSLA | Outputs strobe select signal to the PLL-A IC. |
| 47 | PSTA | Outputs strobe signal to the RXPLL-A IC. |
| 48 | PSLB | Outputs strobe select signal to the PLL-B IC. |
| 49 | PSTB | Outputs strobe signal to the RXPLL-B IC. |
| 51 | MCK | Outputs clock signal to the ICs (other than PLL, scope and DSP ICs). |
| 52 | DAT | Outputs data signal to the ICs (other than PLL, scope and DSP ICs). |
| 54 | CTXD | Output port for the CI-V data. |
| 55 | CRXD/CBSY | Input port for the CI-V data and CI-V bus busy signals. |
| 56 | DSPCK | Outputs clock signal to the DSP IC. |
| 57 | DSPR | Outputs data signal to the DSP IC. |
| 58 | ISTA | Outputs start signal to the internal antenna tuner. |
| 59 | SST1 | Outputs chip select signal to the DDS IC on the SCOPE unit. |
| 60 | SPS0 | Outputs profile select signal to the DDS IC on the SCOPE unit. |
| 61 | SCK | Outputs clock signals to the DDS, PLL and DSP ICs on the SCOPE unit. |
| 63–69, 71, 73–80 | H8_D0–H8_D15 | I/O port for data bus signals. |
| 81 | MUTI | Input port for the external mute control signal.<br>High : Mute ON. |
| 82 | TXS | Outputs control signal to the TX circuit power supply.<br>Low : While transmitting. |
| 83 | NSQA | Input port for the noise pulse signal from the RX-A circuit. |
| 85 | TRAS | Outputs control signal for transmisson (other than PTT and the control signal from ACC). |
| 104 | NSQB | Input port for the noise pulse signal from the RX-B circuit. |
| 105 | RXSA | Outputs control signal to the RX-A circuit power supply.<br>Low : While the RX-A circuit is activated. |
| 106 | RXSB | Outputs control signal to the RX-B circuit power supply.<br>Low : While the RX-B circuit is activated. |
| 107 | SQSA | Outputs RX-A circuit squelch control signal to the ACC jack.<br>High : RX LED lights ON. |
| 108 | SQSB | Outputs RX-B circuit squelch control signal to the ACC jack.<br>High : RX LED lights ON. |
| 109 | SQLSM | Outputs AF mute control signal to the MAIN RX circuit.<br>Low : Squelch is open. |
| 110 | SQLSS | Outputs AF mute control signal to the SUB RX circuit.<br>Low : Squelch is open. |
| 113 | FORL | Input port for the “FOR” signal. |
| 114 | REFL | Input port for the “REF” signal. |
| 115 | ALCL | Input port for the ALC meter control signal. |
| 116 | IDL | Input port for the ID meter control signal. |
| 117 | VDL | Input port for the VD meter control signal. |
| 118 | THML | Input port for the PA unit temperature detect signal. |

| Pin number | Port name | Description |
|---|---|---|
| 119 | FANI | Input port for the driving current detect signal at the cooling fan. |
| 120 | EPAD | Input port for the external keypad on the rear panel. |
| 121 | DX1A | Input port for the data signal from the DSP IC on the DSP-A board. |
| 122 | DX1B | Input port for the data signal from the DSP IC on the DSP-B board. |
| 123 | DX1T | Input port for the data signal from the DSP IC on the DSP-TX board. |
| 124 | DX1S | Input port for the data signal from the DSP IC on the SCOPE unit. |
| 127 | IKEY | Input port for the internal antenna tuner KEY signal. |
| 128 | SKYS | Input port for the straight key. |
| 135 | DSKY | Outputs CW/RTTY keying signal to the DSP IC. |
| 137 | PWRS | Outputs power control signal to the linear circuit.<br>High: The linear circuit is ON. |
| 138 | METCK | Outputs clock signal to the D/A converter (IC603) for the external meter. |
| 140 | METLR | Outputs clock signal to the D/A converter (IC603) for the external meter. |
| 142 | METDT | Outputs data signal to the D/A converter (IC603) for the external meter. |

### 3-7-2 FRONT CPU (DISPLAY BOARD; IC6)

| Pin number | Port name | Description |
|---|---|---|
| 1 | CNTV | Outputs LCD contrast control signal. |
| 2 | BRIV | Outputs LCD brightness control signal. |
| 3 | LDAT | Outputs data signal to the SERI PARA IC (IC7, pin 3). |
| 4 | LST | Outputs strobe signal to the SERI PARA IC (IC7, pin 5). |
| 5 | RTCCK | Outputs clock signal to the clock IC (IC601, pin 6). |
| 8 | RTCCE | Outputs the clock IC (IC601, pin 3) select signal.<br>High : The clock IC is selected. |
| 9 | MOND | Outputs [MONITOR] LED control signal. |
| 17 | RSB | Input port for B phase signal from [RIT] control (150 pulse). |
| 18 | RSA | Input port for A phase signal from [RIT] control (150 pulse). |
| 19 | SSB | Input port for B phase signal from sub dial (1000 pulse). |
| 20 | SSA | Input port for A phase signal from sub dial (1000 pulse). |
| 21 | MSB | Input port for B phase signal from main dial (1000 pulse). |
| 22 | MSA | Input port for A phase signal from main dial (1000 pulse). |
| 23 | TMD | Outputs [TIMER] LED control signal.<br>High : While lighting. |
| 24 | LEDV | Outputs LED brightness control signal. |
| 25 | BKLS | Outputs LCD backlight control signal.<br>High : While lighting. |
| 26 | CFLV | Outputs CFL backlight control signal. |
| 28 | PHNI | Input port for the detecting signal whether the headphones are connected or not.<br>High : Headphones are connected. |
| 33 | LTXD | Outputs data signals by 38400 bps. |
| 34 | LRXD | Input port for data signals by 38400 bps. |
| 35 | DOTK | Input port for the connected electric keyer DOT signal. |
| 36 | DSHK | Input port for the connected electric keyer DASH signal. |
| 37 | SQSS | Outputs squelch signal to [MIC] jack. |
| 38 | RTCDT | I/O port for data signals from/to the clock IC (IC601, pins 4 or 5). |
| 39 | MSPK | Input port for [SPEECH] for the main band. |
| 40 | TRAK | Input port for [TRANSMIT]. |
| 41 | F1K | Input port for [F-1]. |
| 42 | F2K | Input port for [F-2]. |
| 43 | F3K | Input port for [F-3]. |
| 45 | F4K | Input port for [F-4]. |

| Pin number | Port name | Description |
|---|---|---|
| 46 | F5K | Input port for [F-5]. |
| 47 | F6K | Input port for [F-6]. |
| 48 | F7K | Input port for [F-7]. |
| 49 | SSBK | Input port for [SSB. |
| 50 | CWK | Input port for [CW]. |
| 51 | RTYK | Input port for [RTTY/PSK]. |
| 52 | AMK | Input port for [AM/FM]. |
| 53 | DATA | Input port for [DATA]. |
| 54 | MSCK | Input port for [M.SCOPE]. |
| 55 | EXTK | Input port for [EXIT/SET]. |
| 56 | PLYK | Input port for [PLAY]. |
| 57 | RECK | Input port for [REC]. |
| 58 | XFCK | Input port for [XFC]. |
| 59 | EQRK | Input port for [M=S]. |
| 61 | MINK | Input port for [MAIN]. |
| 63 | CHGK | Input port for [CHANGE]. |
| 64 | SUBK | Input port for [SUB]. |
| 65 | MPRK | Input port for [MP-R]. |
| 66 | MWK | Input port for [MW]. |
| 67 | UPK | Input port for [▲]. |
| 68 | DWK | Input port for [▼]. |
| 69 | MPWK | Input port for [MP-W]. |
| 70 | VMK | Input port for [V/M]. |
| 71 | MATK | Input port for [AUTO TUNE] for main band. |
| 72 | MTSK | Input port for [TS] for main band. |
| 73 | PWRK | Input port for [POWER]. |
| 74 | MLCK | Input port for [LOCK] for main band. |
| 75 | SATK | Input port for [AUTO TUNE] for sub band. |
| 76 | STSK | Input port for [TS] for sub band. |
| 77 | SSPK | Input port for [SPEECH] for sub band. |
| 78 | SLCK | Input port for [LOCK] for sub band. |
| 79 | SP2B | Input port for B phase signal from [PBT2] dial for sub band. |
| 80 | SP2A | Input port for A phase signal from [PBT2] dial for sub band. |
| 81 | SP1B | Input port for B phase signal from [PBT1] dial for sub band. |
| 82 | SP1A | Input port for A phase signal from [PBT1] dial for sub band. |
| 83 | MP2B | Input port for B phase signal from [PBT2] dial for main band. |
| 84 | MP2A | Input port for A phase signal from [PBT2] dial for main band. |
| 85 | MP1B | Input port for B phase signal from [PBT1] dial for main band. |
| 86 | MP1A | Input port for A phase signal from [MAIN PBT1] dial. |

### 3-7-3 CPDL CPU (LOGIC UNIT; IC605)

| Pin number | Port name | Description |
|---|---|---|
| 39 | CSTB | Outputs strobe signal to the band controller (CTRL board; IC51; pin 1). |
| 40 | FSTB | Outputs strobe signals to the relay controllers (CTRL board; IC55 and IC56, pin 1). |
| 41 | DPSTA | Outputs strobe signals to the relay controllers (BPF unit; IC101 and IC102, pin 5). |
| 42 | DPSTB | Outputs strobe signals to the relay controller2 (BPF unit; IC401 and IC402, pin 5). |
| 49 | OSS1 | Outputs the reference signal switching signal.<br>High : Outputs reference signal. |
| 50 | OSS2 | Outputs internal/external reference signal select signal.<br>Low : The external reference signal is selected. |
| 52 | OCS | Outputs chip select signal to adjust the OCXO reference on the OSC unit. |
| 53 | RSTBA | Outputs strobe signals to the RX-A circuit. |
| 54 | RSTBB | Outputs strobe signals to the RX-B circuit. |
| 55 | DSONA | Outputs the DIGISEL-A unit control signal. |
| 56 | DSAPA | Outputs the amplifier control signal to the DIGISEL-A unit. |
| 58 | DSTBA | Outputs strobe signals to the DIGISEL-A unit. |
| 59 | DSONB | Outputs the DIGISEL-B unit control signal. |
| 60 | DSAPB | Outputs the amplifier control signal to the DIGISEL-B unit. |
| 61 | DSTBB | Outputs strobe signals to the DIGISEL-B unit. |
| 63<br>64 | MSTB1<br>MSTB2 | Output strobe signals to the MAIN unit. |
| 65 | ASTB1 | Outputs strobe signal to the D/A converter (MAIN unit; IC330; pin 15). |
| 66 | ASTB2 | Outputs strobe signal to the D/A converter (MAIN unit; IC331, pin 15). |
| 67 | DFRA | Outputs frame signal for data setting to the DSP-A unit. |
| 68 | DFXA | Outputs frame signal for data reading to the DSP-A unit. |
| 70 | VSQA | Input port for voice squelch control signal from the DSP-A board.<br>High : Voice squelch is open. |
| 71 | RTDA | Input port for RTTY, BPSK and QPSK decoded data signal from the DSP-A board. |
| 72 | TNDA | Input port for the tone squelch control or QPSK decoding data signals.<br>High : Tone squelch is open. |
| 74 | DULSA | Outputs unlock signal to the DSP-A board.<br>High : Unlock. |
| 77 | DFRB | Outputs frame signal for data setting to the DSP-B unit. |
| 78 | DFXB | Outputs frame signal for data reading to the DSP-B unit. |
| 79 | VSQB | Input port for voice squelch control signal from the DSP-B board.<br>High : Voice squelch is open. |
| 81 | RTDB | Input port for RTTY, BPSK and QPSK decoded data signal from the DSP-B board. |
| 82 | TNDB | Input port for the tone squelch control or QPSK decoding data signals from the DSP-B board.<br>High : Tone squelch is open |
| 85 | DULSB | Outputs unlock signal to the DSP-B board.<br>High : Unlock. |
| 86 | DFRT | Outputs frame signal for data setting to the DSP-TX unit. |
| 87 | DFXT | Outputs frame signal for data reading to the DSP-TX unit. |
| 90 | DAVOX | Input port for the ANT VOX control signal.<br>High : While receiving. |
| 91 | CTFL | Input port for the CW transmitting status signal. |
| 92 | DFRS | Outputs frame signal for data setting to the DSP-SCOPE unit. |
| 93 | DFXS | Outputs frame signal for data reading data to the DSP-SCOPE unit. |
| 94<br>95 | DRESL<br>DRESH | Output reset signals to the DDS and DSP ICs. |

### 3-7-4 MAIN CPU1 (LOGIC UNIT; IC103 )

| Pin number | Port name | Description |
|---|---|---|
| 1 | TMS | Input port for the mode signal. |
| 2 | TCK | Input port for the clock signal. |
| 5 | TDI | Input port for the data signal. |
| 6–10 | CS0<br>CS1<br>CS4<br>CS5<br>CS6 | Output chip select signals. |
| 11 | BS | Outputs bus starting signal. |
| 12 | WE0/REG | Outputs D7–D0 select signal. |
| 13 | WE1 | Outputs D15–D8 select signal. |
| 14 | D0 | I/O port for the data signal. |
| 19–28, 31–35 | D1–D10, D11–D15 | I/O ports for the data signals. |
| 36 | CAS0/DQM0 | Outputs D7–D0 select signal. |
| 37 | CAS1/DQM1 | Outputs D15–D8 select signal. |
| 38 | RD/WR | Outputs read/write control signal. |
| 39 | CKIO | Outputs clock signal. |
| 49, 50 | CS2, CS3 | Output chip select signals. |
| 51–54, 57–66, 69–72 | A0–A3, A4–A13, A14–A17 | Output address signals. |
| 73 | CAS2/DQM2 | Outputs D23–D16 select signal. |
| 74 | CAS3/DQM3 | Outputs D31–D24 select signal. |
| 75–78, 83–92, 95, 96 | D16–D19, D20–D29, D30, D31 | I/O ports for the data signals. |
| 99–104, 107, 108 | A18–A23, A24, A25 | Output address signals. |
| 109 | WE2/ICIORD | Outputs D23–D16 select signal. |
| 110 | WE3/ICIOWR | Outputs D31–D24 select signal. |
| 113 | SLEEP | Input port for the sleep signal. |
| 125 | PCICLK | Input port for the clock signal from the buffer amplifier (IC106). |
| 128 | SERR | I/O port for the system error signal. |
| 129, 130, 133–138, 140–142, 147–151 | AD31, AD30, AD29–AD24, AD23–AD21, AD20–AD16 | I/O ports for the buffer amplifier (IC106) address signals. |
| 156 | DEVSEL | I/O port for the device selecting signal. |
| 164–168, 171–173, 177–182, 185, 186 | AD15–AD11, AD10–AD8, AD7–AD2, AD1, AD0 | I/O ports for the buffer amplifier (IC106) address signals. |
| 187–190 | IRL0–IRL3 | Input ports for the interrupt signals. |
| 193 | XTAL2 | Output port for the crystal oscillator. |
| 194 | EXTAL2 | Input port for the crystal oscillator signal. |
| 197 | CA | Input port for the hardware stand-by signal. |
| 198, 199 | RESET, TRST | Input ports for the reset signal. |
| 200 | MRESET | Input port for the manual reset signal. |
| 206 | TXD | Outputs the buffer amplifier (IC106) data signal. |
| 212 | RXD | Input port for the buffer amplifier (IC106) data signal. |
| 215 | SCK | I/O port for the buffer amplifier (IC106) clock signal. |
| 246 | TDO | Outputs the data signal. |
| 255 | XTAL | Output port for the crystal oscillator. |
| 256 | EXTAL | Input port for the crystal oscillator signal. |

### 3-7-5 RELAY CONTROLLER (CTRL BOARD; IC55)

| Pin number | Port name | Description |
|---|---|---|
| 4 | LPF2 | Outputs the low-pass filter (2–4 MHz) select signal. |
| 5 | LPF8 | Outputs the low-pass filter (22–30 MHz) select signal. |
| 6 | LPF4 | Outputs the low-pass filter (6.9–10 MHz) select signal. |
| 7 | LPF7 | Outputs the low-pass filter (18–22 MHz) select signal. |
| 11 | LPF5 | Outputs the low-pass filter (10–14 MHz) select signal. |
| 12 | LPF9 | Outputs the low-pass filter (30–60 MHz) select signal. |
| 13 | LPF6 | Outputs the low-pass filter (14–18 MHz) select signal. |
| 14 | LPF3 | Outputs the low-pass filter (4–6.9 MHz) select signal. |

### 3-7-6 RELAY CONTROLLER (CTRL BOARD; IC56)

| Pin number | Port name | Description |
|---|---|---|
| 4 | LPF1 | Outputs the low-pass filter (0.03–2 MHz) select signal. |
| 5 | ANT4R | Outputs the antenna ([ANT 4]; RX only) select signal for main band. |

### 3-7-7 RELAY CONTROLLER (ANT-SW UNIT; IC11)

| Pin number | Port name | Description |
|---|---|---|
| 6 | ANT1A | Outputs the antenna ([ANT 1]) select signal for main band. |
| 7 | ANT1B | Outputs the antenna ([ANT 1]) select signal for sub band. |
| 8 | ANT1G | Outputs the control signal to connect the antenna ([ANT 1]) to [GND]. |
| 9 | ANT2A | Outputs the antenna ([ANT 2]) select signal for main band. |
| 10 | ANT2B | Outputs the antenna ([ANT 2]) select signal for sub band. |
| 11 | ANT2G | Outputs the control signal to connect the antenna ([ANT 2]) to [GND]. |
| 12 | ANT3A | Outputs the antenna ([ANT 3]) select signal for main band. |
| 13 | ANT3B | Outputs the antenna ([ANT 3]) select signal for sub band. |
| 14 | ANT3G | Outputs the control signal to connect the antenna ([ANT 3]) to [GND]. |
| 15 | ANT4A | Outputs the antenna ([ANT 4]) select signal for main band. |
| 16 | ANT4B | Outputs the antenna ([ANT 4]) select signal for sub band. |
| 17 | ANT4G | Outputs the control signal to connect the antenna ([ANT 4]) to [GND]. |

### 3-7-8 RELAY CONTROLLER (BPF UNIT; IC101)

| Pin number | Port name | Description |
|---|---|---|
| 6 | B0A | Outputs the RX-A circuit bandpass filter (0.03–1.6 MHz) select signal. |
| 7 | B1A | Outputs the RX-A circuit bandpass filter (1.6–2 MHz) select signal. |
| 8 | B2A | Outputs the RX-A circuit bandpass filter (2–3 MHz) select signal. |
| 9 | B3A | Outputs the RX-A circuit bandpass filter (3–4 MHz) select signal. |
| 10 | B4A | Outputs the RX-A circuit bandpass filter (4–6 MHz) select signal. |
| 11 | B5A | Outputs the RX-A circuit bandpass filter (6–8 MHz) select signal. |
| 12 | B6A | Outputs the RX-A circuit bandpass filter (8–11 MHz) select signal. |
| 13 | B7A | Outputs the RX-A circuit bandpass filter (11–15 MHz) select signal. |
| 14 | B8A | Outputs the RX-A circuit bandpass filter (15–22 MHz) select signal. |
| 15 | B9A | Outputs the RX-A circuit bandpass filter (22–30 MHz) select signal. |
| 16 | B10A | Outputs the RX-A circuit bandpass filter (50–54 MHz) select signal. |
| 17 | B10WA | Outputs the RX-A circuit bandpass filter (30–50 MHz and 54–60 MHz) select signal. |

### 3-7-9 RELAY CONTROLLER (BPF UNIT; IC102)

| Pin number | Port name | Description |
|---|---|---|
| 6 | HF50A | Outputs the RX-A circuit bandpass filter group select signal.<br>Low : While receiving on 30–60 MHz. |
| 7 | AT12A | Outputs the RX-A circuit 12 dB attenuator control signal.<br>High : The 12 dB attenuator is ON. |
| 8 | AT6A | Outputs the RX-A circuit 6 dB attenuator control signal.<br>High : The 6 dB attenuator is ON. |
| 9 | AT3A | Outputs the RX-A circuit 3 dB attenuator control signal.<br>High : The 3 dB attenuator is ON. |
| 11 | DWSPA | Outputs the RX-A circuit split function control signal.<br>Low : The split function is ON. |
| 12 | RMUTA | Outputs the RX-A circuit mute control signal.<br>Low : While the RX-A circuit is muting. |
| 13 | TRVS | Outputs the transverter's receiver circuit control signal.<br>High : The transverter is ON. |
| 14 | RSELA | Outputs receive antenna ([ANT 4]) select signal.<br>Low : [ANT 4] is selected. |
| 16 | VPR2A | Outputs the RX-A circuit 50 MHz preamplifier 2 control signal.<br>Low : The pre-amplifier 2 is ON. |
| 17 | VDWA | Outputs the RX-A circuit 50 MHz correction amplifier control signal.<br>Low : The pre-amplifier 2 is ON (Receive 50 MHz band). |

### 3-7-10 RELAY CONTROLLER (BPF UNIT; IC401)

| Pin number | Port name | Description |
|---|---|---|
| 6 | B0B | Outputs the RX-B circuit bandpass filter (0.03–1.6 MHz) select signal. |
| 7 | B1B | Outputs the RX-B circuit bandpass filter (1.6–2 MHz) select signal. |
| 8 | B2B | Outputs the RX-B circuit bandpass filter (2–3 MHz) select signal. |
| 9 | B3B | Outputs the RX-B circuit bandpass filter (3–4 MHz) select signal. |
| 10 | B4B | Outputs the RX-B circuit bandpass filter (4–6 MHz) select signal. |
| 11 | B5B | Outputs the RX-B circuit bandpass filter (6–8 MHz) select signal. |
| 12 | B6B | Outputs the RX-B circuit bandpass filter (8–11 MHz) select signal. |
| 13 | B7B | Outputs the RX-B circuit bandpass filter (11–15 MHz) select signal. |
| 14 | B8B | Outputs the RX-B circuit bandpass filter (15–22 MHz) select signal. |
| 15 | B9B | Outputs the RX-B circuit bandpass filter (22–30 MHz) select signal. |
| 16 | B10B | Outputs the RX-B circuit bandpass filter (50–54 MHz) select signal. |
| 17 | B10WB | Outputs the RX-B circuit bandpass filter (30–50 MHz and 54–60 MHz) select signal. |

### 3-7-11 RELAY CONTROLLER (BPF UNIT; IC402)

| Pin number | Port name | Description |
|---|---|---|
| 6 | HF50B | Outputs the RX-B circuit bandpass filter group select signal.<br>Low : While receiving on 30–60 MHz. |
| 7 | AT12B | Outputs the RX-B circuit 12 dB attenuator control signal.<br>High : The 12 dB attenuator is ON. |
| 8 | AT6B | Outputs the RX-B circuit 6 dB attenuator control signal.<br>High : The 6 dB attenuator is ON. |
| 9 | AT3B | Outputs the RX-B circuit 3 dB attenuator control signal.<br>High : The 3 dB attenuator is ON. |
| 11 | DWSPB | Outputs the RX-B circuit receive signals switch signal.<br>Low : The splitter function is ON. |
| 12 | RMUTB | Outputs the RX-B circuit mute control signal.<br>Low : While the RX-B circuit is muting. |
| 16 | VPR2B | Outputs the RX-B circuit 50 MHz preamplifier 2 control signal.<br>Low : The pre-amplifier2 is ON. |
| 17 | VDWB | Outputs the RX-B circuit 50 MHz correction amplifier control signal.<br>Low : The pre-amplifier 2 is ON (Receive on 50 MHz band). |

### 3-7-12 CONTROLLER IC (DIGISEL-A UNIT; IC4)

| Pin number | Port name | Description |
|---|---|---|
| 6, 7 | X1A, X2A | Outputs the network serial reactance control signals. |
| 8–11 | S1A–S4A | Output the network I/O capacitance control signals. |
| 12–17 | C1A–C6A | Output the network capacitance control signals. |

### 3-7-13 CONTROLLER IC (DIGISEL-A UNIT; IC5)

| Pin number | Port name | Description |
|---|---|---|
| 6–10 | C7A–C11A | Output the network capacitance control signals. |
| 11–17 | L1A–L7A | Output the network reactance control signals. |

### 3-7-14 CONTROLLER IC (DIGISEL-B UNIT; IC504)

| Pin number | Port name | Description |
|---|---|---|
| 6, 7 | X1B, X2B | Output the network serial reactance control signals. |
| 8–11 | S1B–S4B | Output the network I/O capacitance control signals. |
| 12–17 | C1B–C6B | Output the network capacitance control signals. |

### 3-7-15 CONTROLLER IC (DIGISEL-B UNIT; IC505)

| Pin number | Port name | Description |
|---|---|---|
| 6–10 | C7B–C11B | Output the network capacitance control signals. |
| 11–17 | L1B–L7B | Output the network reactance control signals. |

### 3-7-16 RELAY CONTROLLER (RXPLL-A UNIT; IC1701)

| Pin number | Port name | Description |
|---|---|---|
| 7 | HFOFA | Outputs the HF band's pre-amplifier 2 control signal for the RX-A circuit.<br>High : The pre-amplifiers are OFF. |
| 11 | VP1A | Outputs the 50 MHz band's pre-amplifier 1 control signal for the RX-A circuit.<br>High : The pre-amplifier 1 is ON. |
| 12 | HP2A | Outputs the HF band's pre-amplifier 2 control signal for the RX-A circuit.<br>High : The pre-amplifier 2 is ON. |
| 13 | HP1A | Outputs the HF band's pre-amplifier 1 control signal for the RX-A circuit.<br>High : The pre-amplifier 1 is ON. |
| 14 | VPOFA | Outputs the 50 MHz band's pre-amplifier control signal for the RX-A circuit.<br>High : The pre-amplifier is OFF. |

### 3-7-17 RELAY CONTROLLER (RXPLL-A UNIT; IC1702)

| Pin number | Port name | Description |
|---|---|---|
| 4 | HSEL | Outputs the 1st IF control signal for the RX-A circuit.<br>High : While receiving on HF band. |
| 5 | VSEL | Outputs the 1st IF control signal for the RX-A circuit.<br>High : While receiving on 50 MHz. |
| 6 | IFW | Outputs 1st IF filter (FI1401) select signal for the RX-A circuit.<br>High : Select 15 kHz IF filter. |
| 7 | IFN | Outputs 1st IF filter (FI1402) select signal for the RX-A circuit.<br>High : Select 6 kHz IF filter. |
| 14 | IFNN | Outputs 1st IF filter (FI1403) select signal for the RX-A circuit.<br>High : Select 3 kHz IF filter. |

### 3-7-18 RELAY CONTROLLER (RXPLL-B UNIT; IC1701)

| Pin number | Port name | Description |
|---|---|---|
| 7 | HFOFB | Outputs the HF band's pre-amplifier 2 control signal for the RX-B circuit.<br>High : The pre-amplifiers are OFF. |
| 11 | VP1B | Outputs the 50 MHz band's pre-amplifier 1 control signal for the RX-B circuit.<br>High : The pre-amplifier1 is ON. |
| 12 | HP2B | Outputs the HF band's pre-amplifier 2 control signal for the RX-B circuit.<br>High : The pre-amplifier 2 is ON. |
| 13 | HP1B | Outputs the HF band's pre-amplifier 1 control signal for the RX-B circuit.<br>High : The pre-amplifier 1 is ON. |
| 14 | VPOFB | Outputs the 50 MHz band's pre-amplifier control signal for the RX-B circuit.<br>High : The pre-amplifier is OFF. |

### 3-7-19 RELAY CONTROLLER (RXPLL-B UNIT; IC1702)

| Pin number | Port name | Description |
|---|---|---|
| 4 | HSEL | Outputs the 1st IF control signal for the RX-B circuit.<br>High : While receiving on HF band. |
| 5 | VSEL | Outputs the 1st IF control signal for the RX-B circuit.<br>High : While receiving on 50 MHz. |
| 6 | IFW | Outputs 1st IF filter (FI1401) select signal for the RX-B circuit.<br>High : Select 16 kHz IF filter. |
| 7 | IFN | Outputs 1st IF filter (FI1402) select signal for the RX-B circuit.<br>High : Select 6 kHz IF filter. |
| 14 | IFNN | Outputs 1st IF filter (FI1403) select signal for the RX-B circuit.<br>High : Select 3 kHz IF filter. |

### 3-7-20 BUFFER IC (MAIN UNIT; IC291)

| Pin number | Port name | Description |
|---|---|---|
| 12 | TRVSM | Outputs the transmit signal switching signal.<br>High : The transverter is ON. |
| 13 | SMUT | Outputs the SCOPE 3rd LO muting signal.<br>High : While muting. |
| 14 | SSB | Outputs the scope IF signal switching signal.<br>High : Input from the RX-B circuit. |
| 15 | SSA | Outputs the scope IF signal switching signal.<br>High : Input from the RX-A circuit. |
| 16 | MONS | Outputs the transmitting monitor control signal.<br>High : Transmitting monitor is ON. |
| 17 | MCPS | Outputs modulation input signal control signal.<br>High : Input from the microphone or ACC jack. |
| 18 | MMUT | Outputs the microphone mute control signal.<br>High : While muting. |

### 3-7-21 BUFFER IC (MAIN UNIT; IC311)

| Pin number | Port name | Description |
|---|---|---|
| 11 | FMS | Outputs FM mode select signal. |
| 12 | UNSB | Outputs mode selecting signal other than SSB and AM modes. |
| 13 | B_AFA | Outputs AF signals select signal.<br>High : While outputs AF signals to the ACC-B connector. |
| 14 | A_AFA | Outputs AF signals select signal.<br>High : While outputs AF signals to the ACC-A connector. |
| 15 | SPON | Outputs the internal speaker switching signal.<br>High : While no headphones are connected. |
| 16 | PMIX | Outputs phone L/R mixer control signal.<br>High : While mixing. |
| 17 | MAFS | Outputs AF signal selecting signal from the MAIN pin or the SUB pin of [MIC] jack.<br>High : The SUB pin is selected. |
| 18 | CROSS | Outputs receiver circuits switch signal while split operating.<br>High : Set to [MAIN] to B-channel.<br>: Set to [SUB] to A-channel. |

### 3-7-22 BUFFER IC (MAIN UNIT; IC251)

| Pin number | Port name | Description |
|---|---|---|
| 11 | TXB7 | Outputs the bandpass filter (B7) selecting signal during transmit.<br>High : While transmitting on 11–15 MHz. |
| 12 | TXB6 | Outputs the bandpass filter (B6) selecting signal during transmit.<br>High : While transmitting on 8–11 MHz. |
| 13 | TXB5 | Outputs the bandpass filter (B5) selecting signal during transmit.<br>High : While transmitting on 6–8 MHz. |
| 14 | TXB4 | Outputs the bandpass filter (B4) selecting signal during transmit.<br>High : While transmitting on 4–6 MHz. |
| 15 | TXB3 | Outputs the bandpass filter (B3) selecting signal during transmit.<br>High : While transmitting on 3–4 MHz. |
| 16 | TXB2 | Outputs the bandpass filter (B2) selecting signal during transmit.<br>High : While transmitting on 2–3 MHz. |
| 17 | TXB1 | Outputs the bandpass filter (B1) selecting signal during transmit.<br>High : While transmitting on 1.6–2 MHz. |
| 18 | TXB0 | Outputs the bandpass filter (B0) selecting signal during transmit.<br>High : While transmitting on 0.03–1.6 MHz. |

### 3-7-23 BUFFER IC (MAIN UNIT; IC261)

| Pin number | Port name | Description |
|---|---|---|
| 12 | AMS | Outputs the transmit output power control signal.<br>High : Transmitting in AM mode. |
| 13 | 50MS | Outputs the transmit output power control signal.<br>High : Transmitting in 50 MHz band. |
| 14 | HFS | Outputs the HF band transmitting power control signal. |
| 16 | TXB10 | Outputs the bandpass filter (B10) selecting signal.<br>High : While transmitting on 30–60 MHz. |
| 17 | TXB9 | Outputs the bandpass filter (B9) selecting signal.<br>High : While transmitting on 22–30 MHz. |
| 18 | TXB8 | Outputs the bandpass filter (B8) selecting signal.<br>High : While transmitting on 15–22 MHz. |

### 3-7-24 SERIAL/PARAMETER IC (RXPLL-A UNIT; IC1)

| Pin number | Port name | Description |
|---|---|---|
| 4 | PST2A | Outputs the strobe signals to the 1st LO PLL IC on the RXPLL-A unit. |
| 5 | PST1A | Outputs the strobe signals to the 1st LO DDS IC on the RXPLL-A unit. |
| 6 | PST3A | Outputs the strobe signals to the 2nd LO DDS IC on the RXPLL-A unit. |
| 7 | PST4A | Outputs the strobe signals to the T3 LO DDS IC on the RXPLL-A unit. |

### 3-7-25 SERIAL/PARAMETER IC (RXPLL-B UNIT; IC1)

| Pin number | Port name | Description |
|---|---|---|
| 4 | PST2B | Outputs the strobe signals to the 1st LO PLL IC on the RXPLL-B unit. |
| 5 | PST1B | Outputs the strobe signals to the 1st LO DDS IC on the RXPLL-B unit. |
| 6 | PST3B | Outputs the strobe signals to the 2nd LO DDS IC on the RXPLL-B unit. |
| 7 | PST4B | Outputs the strobe signals to the T3 LO DDS IC on the RXPLL-B unit. |

### 3-7-26 DDS IC (RXPLL-A UNIT; IC101)

| Pin number | Port name | Description |
|---|---|---|
| 67 | MUTA | Outputs the 1st LO muting signal to the RXPLL-A unit.<br>High : While muting. |
| 68 | VA6S | Outputs the 1st LO VCO (VCO6) control signal to the RXPLL-A unit.<br>High : While receiving on 45–60 MHz. |
| 70 | VA5S | Outputs the 1st LO VCO (VCO5) control signal to the RXPLL-A unit.<br>High : While receiving on 30–45 MHz. |
| 71 | VA4S | Outputs the 1st LO VCO (VCO4) control signal to the RXPLL-A unit.<br>High : While receiving on 22–30 MHz. |
| 73 | VA3S | Outputs the 1st LO VCO (VCO3) control signal to the RXPLL-A unit.<br>High : While receiving on 15–22 MHz. |
| 74 | VA2S | Outputs the 1st LO VCO (VCO2) control signal to the RXPLL-A unit.<br>High : While receiving on 8–15 MHz. |
| 75 | VA1S | Outputs the 1st LO VCO (VCO1) control signal to the RXPLL-A unit.<br>High : While receiving on 0.03–8 MHz. |

### 3-7-27 DDS IC (RXPLL-B UNIT; IC101)

| Pin number | Port name | Description |
|---|---|---|
| 67 | MUTB | Outputs the 1st LO muting signal to the RXPLL-B unit.<br>High : While muting. |
| 68 | VB6S | Outputs the 1st LO VCO (VCO6) control signal to the RXPLL-B unit.<br>High : While receiving on 45–60 MHz. |
| 70 | VB5S | Outputs the 1st LO VCO (VCO5) control signal to the RXPLL-B unit.<br>High : While receiving on 30–45 MHz. |
| 71 | VB4S | Outputs the 1st LO VCO (VCO4) control signal to the RXPLL-B unit.<br>High : While receiving on 22–30 MHz. |
| 73 | VB3S | Outputs the 1st LO VCO (VCO3) control signal to the RXPLL-B unit.<br>High : While receiving on 15–22 MHz. |
| 74 | VB2S | Outputs the 1st LO VCO (VCO2) control signal to the RXPLL-B unit.<br>High : While receiving on 8–15 MHz. |
| 75 | VB1S | Outputs the 1st LO VCO (VCO1) control signal to the RXPLL-B unit.<br>High : While receiving on 0.03–8 MHz. |

### 3-7-28 D/A CONVERTER IC (MAIN UNIT; IC330)

| Pin number | Port name | Description |
|---|---|---|
| 2 | MICV | Outputs the modulation level from the microphone control signal. |
| 3 | DRIV | Outputs the drive gain control signal. |
| 4 | POCV | Outputs the transmit output power control signal. |
| 5 | BNDM | Outputs the operating band control signal for main band. |
| 6 | BNDS | Outputs the operating band control signal for sub band. |
| 7 | SATT | Outputs attenuator control signal to the SCOPE unit. |
| 8 | FANV | Outputs the PA cooling fan control signal. |
| 18 | MODVA | Outputs modulation input level from [ACC A] control signal. |
| 19 | MODVB | Outputs modulation input level from [ACC B] control signal. |

### 3-7-29 D/A CONVERTER IC (MAIN UNIT; IC331)

| Pin number | Port name | Description |
|---|---|---|
| 2 | AFGVS1 | Outputs the AF gain control signal for sub band (primary control). |
| 3 | AFGVS2 | Outputs the AF gain control signal for sub band (secondary control). |
| 4 | PHML1 | Outputs the main band's AF gain control signal for [PHONES] (primary control). |
| 5 | PHML2 | Outputs the main band's AF gain control signal for [PHONES] (secondary control). |
| 6 | PHSL1 | Outputs the sub band's AF gain control signal for [PHONES] (primary control). |
| 7 | PHSL2 | Outputs the sub band's AF gain control signal for [PHONES] (secondary control). |
| 8 | AAFVA | Outputs [ACC-A] AF output level control signal. |
| 9 | AAFVB | Outputs [ACC-B] AF output level control signal. |
| 12 | MAMS | Outputs AM mode selecting signal for main band.<br>Low : While selecting AM mode in main band. |
| 13 | SAMS | Outputs AM mode selecting signal for sub band.<br>Low : While selecting AM mode in sub band. |
| 18 | AFGVM1 | Outputs AF gain control signal for main band (primary control). |
| 19 | AFGVM2 | Outputs AF gain control signal for main band (secondary control). |

### 3-7-30 D/A CONVERTER IC (LOGIC UNIT; IC603)

| Pin number | Port name | Description |
|---|---|---|
| 1 | METS | Outputs external meter control signal for sub band. |
| 4 | METM | Outputs external meter control signal for main band. |

### 3-7-31 CPLD IC (LOGIC UNIT; IC52)

| Pin number | Port name | Description |
|---|---|---|
| 60, 61 63–68, 70 | IMS0–IMS8 | Output the matrix/strobe signals. |
| 71 | IMR0 | Input port for the matrix return signal. |
| 72 | IMRE0 | Outputs permit signal to read the matrix return signal. |
| 74 | IMR1 | Input port for the matrix return signal. |
| 76 | IMRE1 | Outputs permit signal to read the matrix return signal. |
| 77 | FR_STS | Input port for the writing status signal to the flash ROM (MEMORY board; IC2, pin 5). |
| 78 | FR_VPEN | Outputs permit signal to write data to the flash ROM (MEMORY board; IC2, pin 15). |
| 92 | DO_VS | Input port for the “VS” signal from the GDC IC (IC203). |
| 93 | DO_HS | Input port for the “HS” signal from the GDC IC (IC203). |
| 94 | EX_HS | Outputs “HS” signal for the external monitor. |
| 95 | EX_VS | Outputs “VS” signal for the external monitor. |

### 3-7-32 EXPANDER IC (TENKEY BOARD; IC1)

| Pin number | Port name | Description |
|---|---|---|
| 6 | MTXD | Outputs [TX] LED for main band control signal.<br>Low : While transmitting. |
| 7 | MRXD | Outputs [RX] LED fir main band control signal.<br>Low : While receiving a signal or squelch is opened in main band. |
| 8 | MLCD | Outputs [DIAL LOCK] LED for main dial control signal.<br>Low : [MAIN DIAL] is locked. |
| 9 | SPLD | Outputs [SPLIT] LED control signal.<br>Low : During spilt operation. |
| 10 | STXD | Outputs [TX] LED for sub band control signal.<br>Low : While transmitting in split operation. |
| 11 | SRXD | Outputs [RX] LED for sub band control signal.<br>Low : While receiving a signal or squelch is opened in sub band. |
| 12 | MLCD | Outputs [DIAL LOCK] LED for sub dial control signal.<br>Low : [SUB DIAL] is locked. |
| 13–16 | TKYD1, TKYD2, TKYD3, TKYD4 | Output tenkey backlight control signals. |

### 3-7-33 EXPANDER IC (TENKEY BOARD; IC2)

| Pin number | Port name | Description |
|---|---|---|
| 6 | MPCD | Outputs [PBT CLEAR] LED for main band control signal.<br>Low : While using the PBT function in main band. |
| 7 | SPCD | Outputs [PBT CLEAR] LED for sub band control signal.<br>Low : While using PBT function in sub band. |
| 8 | MAPD | Outputs [APF/TPF] LED for main band control signal.<br>Low : While using [APF/TPF] function in main band . |
| 9 | SAPD | Outputs [APF/TPF] LED for sub band control signal.<br>Low : While using [APF/TPF] function in sub band . |
| 12 | MNCD | Outputs [NOTCH ON] LED for main band control signal.<br>Low : While using [NOTCH] function in main band . |
| 13 | SNCD | Outputs [NOTCH ON] LED for sub band control signal.<br>Low : While using [NOTCH] function in sub band . |
| 14 | SUBD | Outputs [SUB] LED control signal.<br>Low : While sub band access is enabled. |
| 15 | MIND | Outputs [MAIN] LED control signal.<br>Low : While main band access is enabled. |

### 3-7-34 SERIAL/PARAMETER IC (DISPLAY BOARD; IC7)

| Pin number | Port name | Description |
|---|---|---|
| 7 | TN1D | Outputs [TUNER] LED control signal.<br>Low : While tuning. |
| 8 | TN2D | Outputs [TUNER] LED control signal.<br>Low : While the antenna is tuned. |
| 9 | VOXD | Outputs [VOX/BKIN] LED control signal.<br>Low : While using the VOX/break-in function. |
| 10 | MAGD | Outputs [AGC VR] LED for main band control signal.<br>Low : When setting the AGC with [AGC] control for main band. |
| 11 | MNRD | Outputs [NR] LED control signal.<br>Low : When the noise reduction is used in main band.. |
| 12 | MNBD | Outputs [NB] LED control signal.<br>Low : When the noise blanker is used in main band. |
| 13 | SAGD | Outputs [AGC VR] LED control signal.<br>Low : When setting the AGC with [AGC] control for sub band. |
| 14 | SNRD | Outputs [NR] LED control signal.<br>Low : When the noise reduction is used in sub band. |
| 15 | SNBD | Outputs [NB] LED control signal.<br>Low : When the noise blanker is used in sub band. |
| 16 | CFBD | Outputs CF memory card accessing indicator control signal.<br>Low : When the transceiver reading/writing data from/to the CF memory card. |
| 17 | STBD | Outputs [POWER] LED control signal.<br>Low : While the main power is ON and the transceiver's power is OFF. |

### 3-7-35 EXPANDER IC (DISPLAY BOARD; IC1)

| Pin number | Port name | Description |
|---|---|---|
| 1 | MAGL | Input port for [AGC] control signal for main band. |
| 2 | SAGL | Input port for [AGC] control signal for sub band. |
| 4 | SSQL | Input port for [SQL] control signal for sub band. |
| 5 | MSQL | Input port for [SQL] control signal for main band. |
| 12 | DELL | Input port for [DELAY] control signal. |
| 13 | MICL | Input port for [MIC] control signal. |
| 14 | PWRL | Input port for [RF] control signal. |
| 15 | KYSL | Input port for [KEY SPEED] control signal. |

### 3-7-36 EXPANDER IC (DISPLAY BOARD; IC2)

| Pin number | Port name | Description |
|---|---|---|
| 1 | MAFL | Input port for [AF] control for main band signal. |
| 2 | SAFL | Input port for [AF] control for sub band signal. |
| 4 | SRFL | Input port for [RF] control for sub band signal. |
| 5 | MRFL | Input port for [RF] control for main band signal. |
| 12 | SNBL | Input port for [NB] control for sub band signal. |
| 13 | MNRL | Input port for [NR] control for main band signal. |
| 14 | MNBL | Input port for [NB] control for main band signal. |
| 15 | SNRL | Input port for [NR] control for sub band signal. |

### 3-7-37 EXPANDER IC (DISPLAY BOARD; IC3)

| Pin number | Port name | Description |
|---|---|---|
| 1 | AVXL | Input port for [ANTI VOX] control signal. |
| 2 | BRIL | Input port for [BRIGHT] control signal. |
| 4 | MDGL | Input port for [DIGISEL] control for main band signal. |
| 5 | CNTL | Input port for [CONTRAST] control signal. |
| 12 | VOXL | Input port for [VOX GAIN] control signal. |
| 13 | MONL | Input port for [MONI GAIN] control signal. |
| 14 | CMPL | Input port for [COMP] control signal. |
| 15 | DRVL | Input port for [DRIVE] control signal. |

### 3-7-38 EXPANDER IC (DISPLAY BOARD; IC4)

| Pin number | Port name | Description |
|---|---|---|
| 1 | KI0 | Input port for [CLEAR], [DUAL WATCH] and [SPLIT]. |
| 2 | KI2 | Input port for both main and sub bands [APF/TPF]. |
| 4 | KI3 | Input port for both main and sub bands [FILTER] and [PBT CLEAR]. |
| 5 | KI1 | Input port for both main and sub bands [NOTCH], [RIT] and [ΔTX]. |
| 12 | PITL | Input port for [CW PITCH] control signal. |
| 13 | MNCL | Input port for [NOTCH] control for main band signal. |
| 14 | SDGL | Input port for [DIGI-SEL] control for sub band signal. |
| 15 | SNCL | Input port for [NOTCH] control for sub band signal. |

### 3-7-39 EXPANDER IC (DISPLAY BOARD; IC5)

| Pin number | Port name | Description |
|---|---|---|
| 1 | KI8 | Input port for [▶] switches from first to fourth. |
| 2 | KI10 | Input port for [AGC VR], [NR] and [NB] switches for main band. |
| 4 | KI11 | Input port for [MONI], [TUNER] and [TIMER]. |
| 5 | KI9 | Input port for [AGC VR], [NR] and [NB] switches for sub band. |
| 12 | KI7 | Input port for [▶] switches from fifth to seventh. |
| 13 | KI4 | Input port for [7 (3)], [18 (6)], [28 (9)] and [F-INP (ENT)]. |
| 14 | KI5 | Input port for [3.5 (2)], [14 (5)], [24 (8)] and [50 (0)]. |
| 15 | KI6 | Input port for [1.8 (1)], [10 (4)], [21 (7)] and [GENE (.)]. |

## 3-8 IF AND LO FREQUENCIES LIST

### 3-8-1 MAIN AND SUB 1ST LO FREQUENCIES LIST (FOR RECEIVING)

| MODE | MAIN 1ST LO FREQUENCY (MHz) | SUB 1ST LO FREQUENCY (MHz) |
|---|---|---|
| **USB** | 64.4865–124.4565 | 64.5865–124.5565 |
| **LSB** | 64.4835–124.4535 | 64.5835–124.5535 |
| **CW** | 64.4850–124.4550 | 64.5850–124.5550 |
| **RTTY** | 64.48483–124.45483 | 64.58483–124.55483 |
| **PSK31** | 64.4850–124.4550 | 64.5850–124.5550 |
| **AM** | 64.4850–124.4550 | 64.5850–124.5550 |
| **FM** | 64.4850–124.4550 | 64.5850–124.5550 |

### 3-8-2 MAIN AND SUB 2ND LO FREQUENCIES LIST (FOR RECEIVING)

| MODE | MAIN 2ND LO FREQUENCY (kHz) | SUB 2ND LO FREQUENCY (MHz) |
|---|---|---|
| **USB** | 64.4925 | 64.5925 |
| **LSB** | 64.4895 | 64.5985 |
| **CW*[1]** | 64.4910 - CW PITCH | 64.5910 - CW PITCH |
| **RTTY*[2]** | 64.48868 | 64.58868 |
| **PSK31** | 64.4925 | 64.5925 |
| **AM** | 64.4910 | 64.5910 |
| **FM** | 64.4910 | 64.5910 |

*[1]CW-PITCH: 300–900 Hz, *[2]RTTY TONE: 21.25 Hz; SHIFT: 170 Hz

### 3-8-3 3RD IF AND LO FREQUENCIES LIST (FOR TRANSMITTING)

| MODE | 3RD IF FREQUENCY (kHz) | 3RD LO FREQUENCY (kHz) |
|---|---|---|
| **USB** | 36.000 | 492.500 |
| **LSB** | 36.000 | 489.500 |
| **CW** | 36.000 | 491.000 |
| **RTTY*** | 33.875 | 488.705 |
| **PSK31** | 36.000 | 491.000 |
| **AM** | 36.000 | 491.000 |
| **FM** | 36.000 | 491.000 |

*RTTY TONE: 21.25 Hz; SHIFT: 170 Hz

### 3-8-4 2ND IF AND LO FREQUENCIES LIST (FOR TRANSMITTING)

| MODE | 2ND IF FREQUENCY (kHz) | 2ND LO FREQUENCY (MHz) |
|---|---|---|
| **USB** | 456.500 | 64.000 |
| **LSB** | 453.500 | |
| **CW** | 455.000 | |
| **RTTY** | 454.830 | |
| **PSK31** | 455.000 | |
| **AM** | 455.000 | |
| **FM** | 455.000 | |

### 3-8-5 1ST IF FREQUENCIES LIST (FOR TRANSMITTING)

| MODE | 1ST IF FREQUENCY (MHz) |
|---|---|
| **USB** | 64.45650 |
| **LSB** | 64.45350 |
| **CW** | 64.45500 |
| **RTTY** | 64.45483 |
| **PSK31** | 64.45500 |
| **AM** | 64.45500 |
| **FM** | 64.45500 |

### 3-8-6 1ST LO FREQUENCIES LIST (FOR TRANSMITTING)

| BAND (MHz) | LO FREQUENCY (MHz) | BAND (MHz) | LO FREQUENCY (MHz) |
|---|---|---|---|
| **1.9** | 66.2580–66.2800 | **10** | 66.2580–66.2800 |
| | 66.3625–66.3675 | **14** | 66.3625–66.3675 |
| **3.5** | 67.9550–68.0300 | **18** | 67.9550–68.0300 |
| **3.8** | 68.2020–68.2090 | **21** | 68.2020–68.2090 |
| | 68.2460–68.2600 | **24** | 68.2460–68.2600 |
| **4.63** | 69.0850 | **28** | 69.0850 |
| **7** | 71.4550–71.5550 | **50** | 71.4550–71.5550 |

# SECTION 4 ADJUSTMENT PROCEDURES

## 4-1 PREPARATION BEFORE SERVICING

### ■ REQUIRED TEST EQUIPMENT

| EQUIPMENT | GRADE AND RANGE | | EQUIPMENT | GRADE AND RANGE | |
|---|---|---|---|---|---|
| AC outlet | Voltage | : 85–265 V | Audio generator | Frequency range<br>Measuring range | : 300–3000 Hz<br>: 1–500 mV |
| RF power meter (terminated type) | Measuring range<br>Frequency range<br>Impedance<br>SWR | : 250–300 W<br>: 1.8–100 MHz<br>: 50 Ω<br>: Less than 1.2 : 1 | Standard signal generator (SSG) | Frequency range<br>Output level | : 0.1–100 MHz<br>: 0.1 µV to 32 mV (–127 to –17 dBm) |
| Frequency counter | Frequency range<br>Frequency accuracy<br>Sensitivity | : 0.1–100 MHz<br>: ±0.5 ppm or better<br>: 100 mV or better | Digital multimeter | Input impedance | : 10 MΩ/DC or more |
| RF voltmeter | Frequency range<br>Measuring range | : 0.1–100 MHz<br>: 0.01–10 V | DC voltmeter | Input impedance | : 50 kΩ/V DC or better |
| AC millivolt meter | Measuring range | : 10 mV to 10 V | DC ammeter | Measurement capability | : 5 A/30 A |
| Attenuator | Power attenuation<br>Capacity | : 50 or 60 dB<br>: 200 W | Spectrum analyzer | Frequency range<br>Spectraum bandwidth | : At least 90 MHz<br>: 100 kHz or more |
| Oscilloscope | Frequency range<br>Measuring range | : DC to 20 MHz<br>: 0.01–20 V | External speaker | Input impedance<br>Capacity | : 8 Ω<br>: 5 W or more |
| | | | Dummy load | Input impedance<br>Capacity | : 50 and 100 Ω<br>: 200 W or more |

### ■ CONNECTIONS

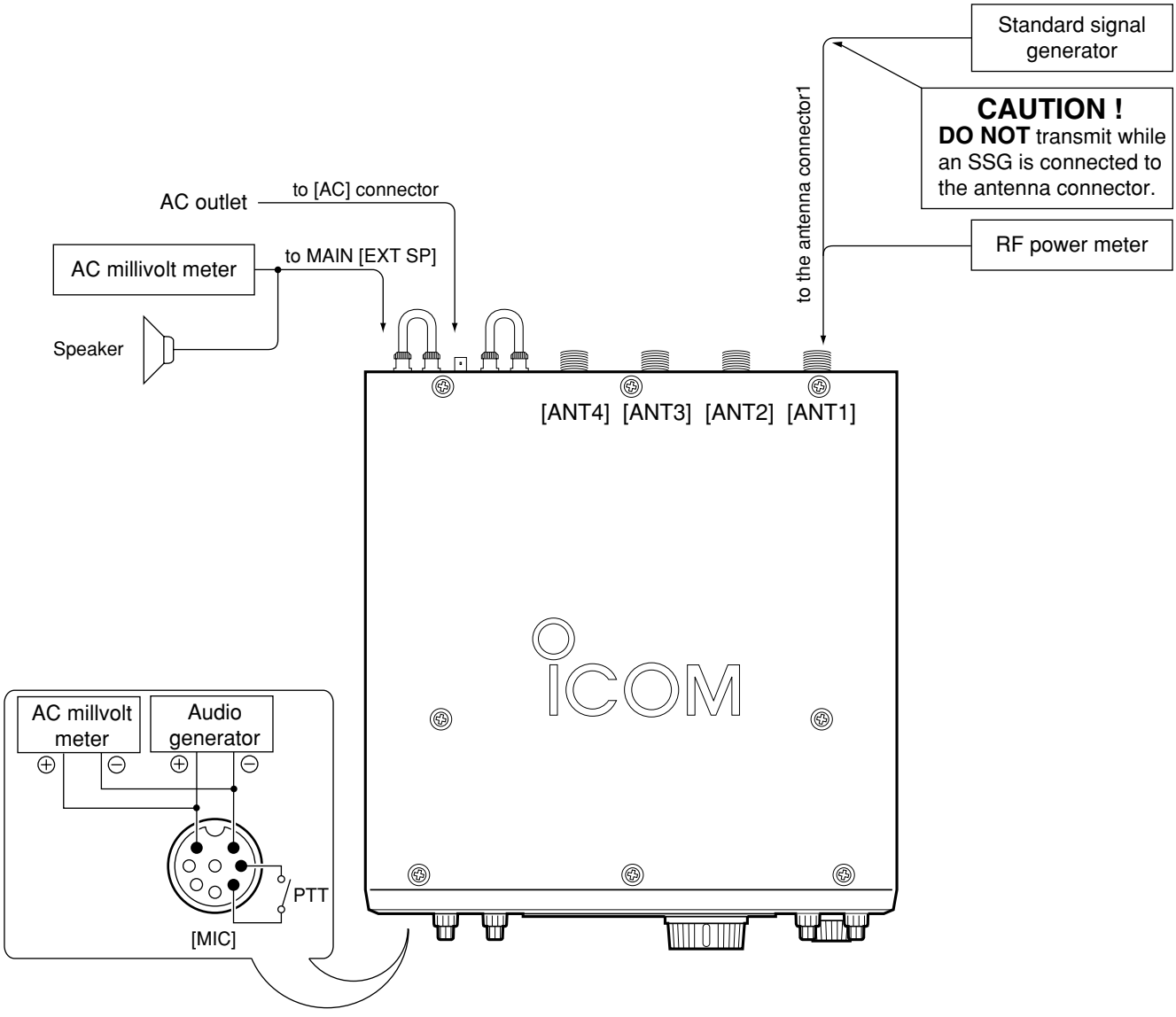

## 4-2 OSC UNIT ADJUSTMENTS

| ADJUSTMENT | | ADJUSTMENT CONDITION | MEASUREMENT | | VALUE | ADJUSTMENT POINT | |
|---|---|---|---|---|---|---|---|
| | | | UNIT | LOCATION | | UNIT | ADJUST |
| REFERENCE OUTPUT | 1 | • Set the OSC unit to the external reference mode on the set mode.<br>• MAIN display frequency : 10.000 MHz<br>• Connect an SSG to J71 on the OSC unit and set as;<br>Frequency : 10.000 MHz<br>Level : 71 mV* (–10 dBm)<br>Modulation : OFF<br>• Terminates J73 with 50 Ω.<br>• Receiving | OSC | Connect an RF voltmeter to J72. | Maximum voltage | OSC | Adjust repeatedly L61, L62 |
| REF IN OUTPUT | 2 | • Receiving | OSC | Connect an RF voltmeter to J72. | 0 dBm ±3.0 dB | | Verify |
| | | • Terminates J72 with 50 Ω.<br>• Receiving | | Connect an RF voltmeter to J73. | 0 dBm ±3.0 dB | | Verify |
| REF OUT OUTPUT | 3 | • Set the OSC unit to the internal reference mode on the set mode.<br>• Receiving | OSC | Connect an RF voltmeter to J71. | –10.0 dBm ±3.0 dB | | Verify |
| | | • Terminates J73 with 50 Ω.<br>• Receiving | | Connect an RF voltmeter to J72. | 0 dBm ±3.0 dB | | Verify |
| | | • Terminates J72 with 50 Ω.<br>• Receiving | | Connect an RF voltmeter to J73. | 0 dBm ±3.0 dB | | Verify |

*This output level of a standard signal generator (SSG) is indicated as SSG's open circuit.

**• OSC UNIT TOP VIEW**

**• LOCATION**

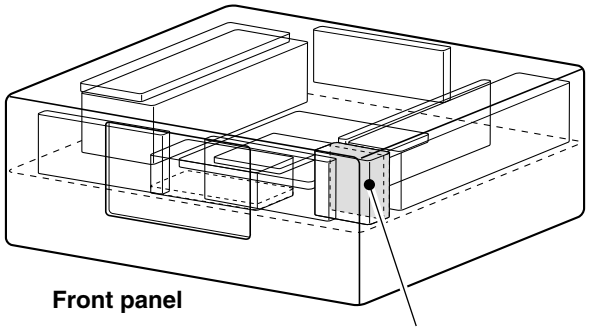


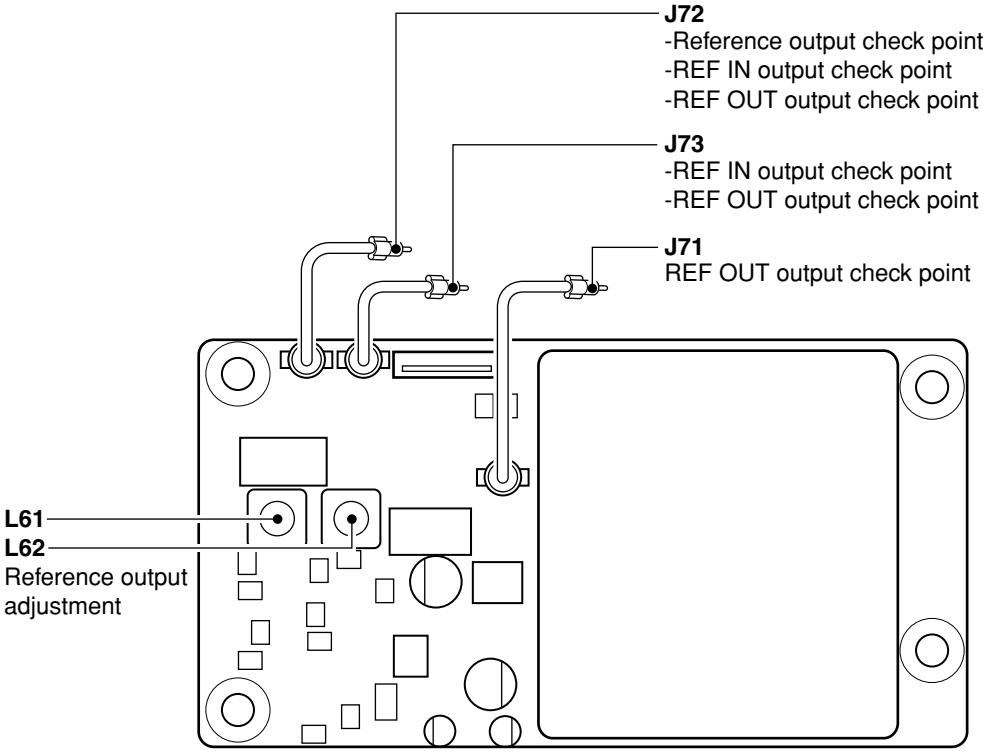

## 4-3 RXPLL-A UNIT ADJUSTMENTS

| ADJUSTMENT | | ADJUSTMENT CONDITION | MEASUREMENT | | VALUE | ADJUSTMENT POINT | |
|---|---|---|---|---|---|---|---|
| | | | UNIT | LOCATION | | UNIT | ADJUST |
| 40M OUTPUT | 1 | • MAIN display frequency : 0.030 MHz<br>• Mode : USB<br>• Receiving | RX PLL-A | Connect an RF voltmeter to CP701 (40 MHz). | Maximum voltage | RX PLL-A | Adjust repeatedly L702, L703 |
| LPL LOCK VOLTAGE | 1 | • MAIN display frequency : 0.030 MHz<br>• Mode : USB<br>• Receiving | RX PLL-A | Connect a DC voltmeter to CP1 (LV1). | 2.0 V ±0.1 V | RX PLL-A | C154 |
| | 2 | • MAIN display frequency : 7.999 MHz<br>• Mode : USB<br>• Receiving | | | Less than 3.0 V | | Verify |
| HPL LOCK VOLTAGE (VCO1) | 1 | • MAIN display frequency : 7.999 MHz<br>• Mode : USB<br>• Receiving | RX PLL-A | Connect a DC voltmeter to CP2 (LV2). | 4.0 V ±0.1 V | RX PLL-A | C222 |
| (VCO2) | 2 | • MAIN display frequency : 14.999 MHz<br>• Mode : USB<br>• Receiving | | | 4.0 V ±0.1 V | | C232 |
| (VCO3) | 3 | • MAIN display frequency : 21.999 MHz<br>• Mode : USB<br>• Receiving | | | 4.0 V ±0.1 V | | C242 |
| (VCO4) | 4 | • MAIN display frequency : 29.999 MHz<br>• Mode : USB<br>• Receiving | | | 4.0 V ±0.1 V | | C252 |
| (VCO5) | 5 | • MAIN display frequency : 44.999 MHz<br>• Mode : USB<br>• Receiving | | | 4.0 V ±0.1 V | | C262 |
| (VCO6) | 6 | • MAIN display frequency : 60.000 MHz<br>• Mode : USB<br>• Receiving | | | 4.0 V ±0.1 V | | C272 |
| (VCO1) | 7 | • MAIN display frequency : 0.030 MHz<br>• Mode : USB<br>• Receiving | RX PLL-A | Connect a DC voltmeter to CP2 (LV2). | 1.2 V–2.0 V | RX PLL-A | Verify |
| (VCO2) | 8 | • MAIN display frequency : 8.000 MHz<br>• Mode : USB<br>• Receiving | | | 1.2 V–2.0 V | | Verify |
| (VCO3) | 9 | • MAIN display frequency : 15.000 MHz<br>• Mode : USB<br>• Receiving | | | 1.2 V–2.0 V | | Verify |
| (VCO4) | 10 | • MAIN display frequency : 22.000 MHz<br>• Mode : USB<br>• Receiving | | | 1.2 V–2.0 V | | Verify |
| (VCO5) | 11 | • MAIN display frequency : 30.000 MHz<br>• Mode : USB<br>• Receiving | | | 1.2 V–2.0 V | | Verify |

**• RXPLL-A UNIT TOP VIEW**

**• LOCATION**

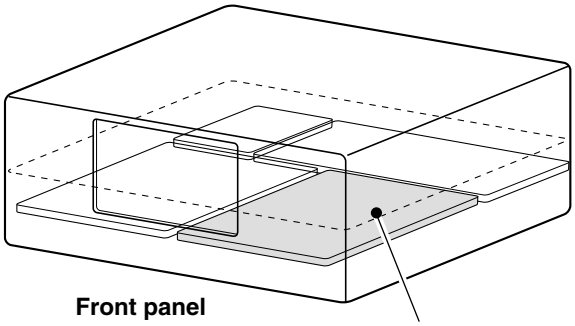


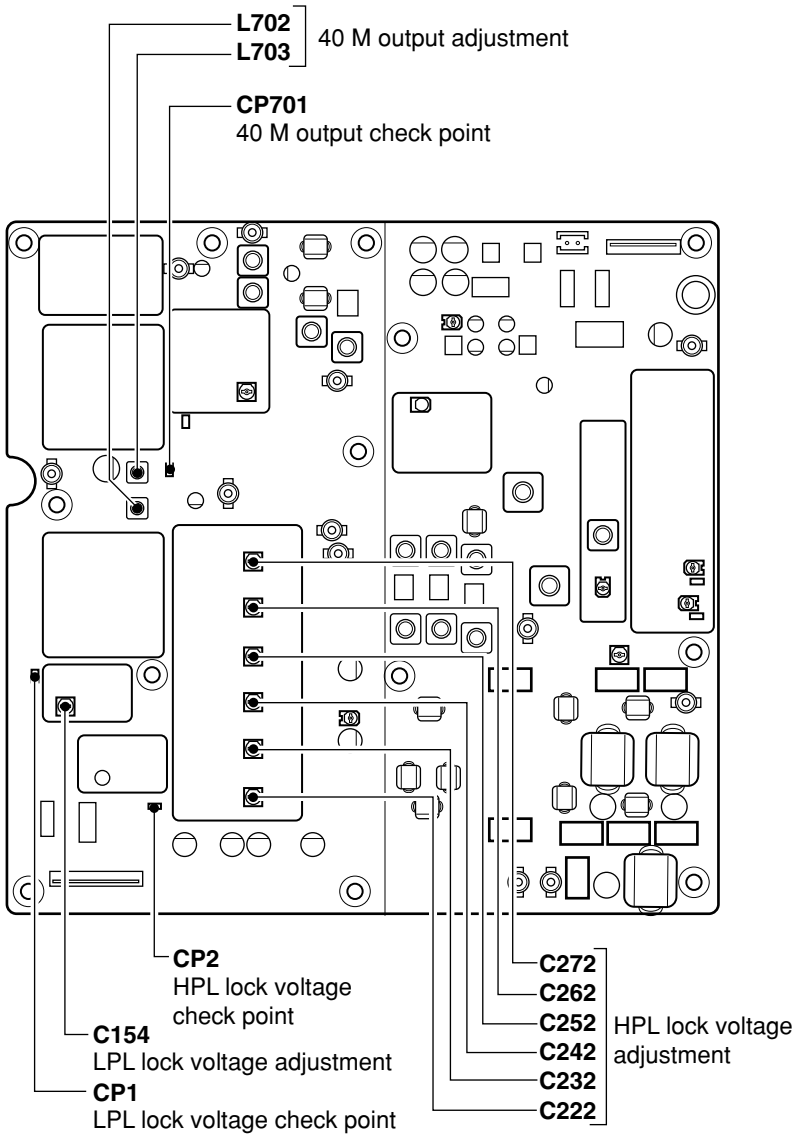

## RXPLL-A UNIT ADJUSTMENTS–Continued

| ADJUSTMENT | | ADJUSTMENT CONDITION | MEASUREMENT | | VALUE | ADJUSTMENT POINT | |
|---|---|---|---|---|---|---|---|
| | | | UNIT | LOCATION | | UNIT | ADJUST |
| HPL LOCK VOLTAGE (VCO6) | 12 | • MAIN display frequency : 45.000 MHz<br>• Mode : USB<br>• Receiving | RX PLL-A | Connect a DC voltmeter to CP2 (LV2). | 1.2 V–2.0 V | RX PLL-A | Verify |
| R1 LO OUTPUT | 1 | • MAIN display frequency : 14.999 MHz<br>• Mode : USB<br>• Receiving | RX PLL-A | Connect an RF voltmeter to J351 (R1LO). | 2.25 dBm ±0.25 dB | RX PLL-A | R357 |
| 2LO LOCK VOLTAGE | 1 | • MAIN display frequency : 14.100 MHz<br>• Mode : USB<br>• Receiving | RX PLL-A | Connect a DC voltmeter to CP3. | 3.0 V ±0.3 V | RX PLL-A | C546 |
| R2 LO OUTPUT | 1 | • MAIN display frequency : 14.100 MHz<br>• Mode : USB<br>• Receiving | RX PLL-A | Connect a spectrum analyzer to J831 (R2LO). | Maximum level (–10 dBm ±3.0 dB) | RX PLL-A | L801, L834 |
| T2 LO OUTPUT | 1 | • MAIN display frequency : 14.100 MHz<br>• Mode : USB<br>• Receiving | RX PLL-A | Connect a spectrum analyzer to J561 (T2LO). | Maximum level (3.0 dBm ±3.0 dB) | RX PLL-A | Adjust repeatedly L565, L566 |
| RX SENSITIVITY (HF) | 1 | Pre-set the IC-7800 as the following condition.<br>• MAIN display frequency : 14.150 MHz<br>• Mode : USB<br>• Dualwatch : OFF<br>• MAIN Ant. : ANT1<br>• Pre-amp. 1 : ON<br>• SUB AF : Minimum level<br>• Receiving | RX PLL-A | Connect a DC voltmeter to CP1102. | 4.5 V ±0.1 V | RX PLL-A | R1101 |
| | | | | Connect a DC voltmeter to CP1103. | 4.5 V ±0.1 V | RX PLL-A | R1132 |
| | | | | Per-set L1401, L1402, L1403, L1404, L1405 and L1406 as the illustration at right. | 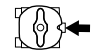 Center position | RX PLL-A | R1228 |
| | | | | | 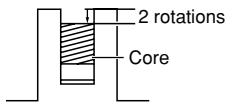 | RX PLL-A | L1401, L1402 |
| | | | | | 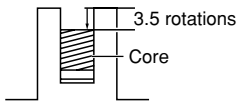 | RX PLL-A | L1403, L1404 |
| | | | | | 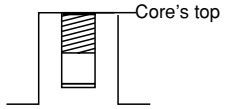 | RX PLL-A | L1410, L1411 |
| | 2 | • MAIN display frequency : 14.150 MHz<br>• Mode : USB<br>• Connect an SSG to [ANT1] connector and set as;<br>Frequency : 14.1515 MHz<br>Level : 1 µV* (–107 dBm)<br>Modulation : OFF<br>• Receiving | Rear panel | Connect an AC millivolt meter to [EXT SP] jack with 8 Ω load. | Maximum audio level | RX PLL-A | L1408, L1058 |

*This output level of a standard signal generator (SSG) is indicated as SSG's open circuit.

**• RXPLL-A UNIT TOP VIEW**

**• LOCATION**

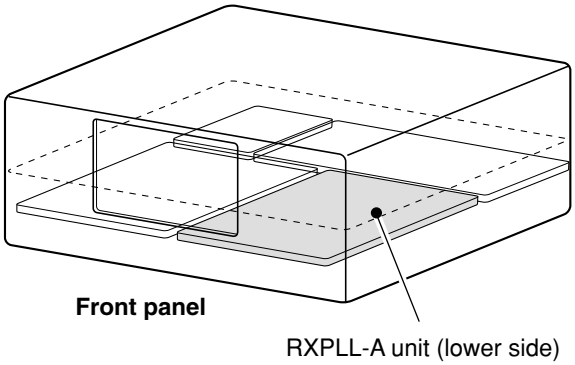


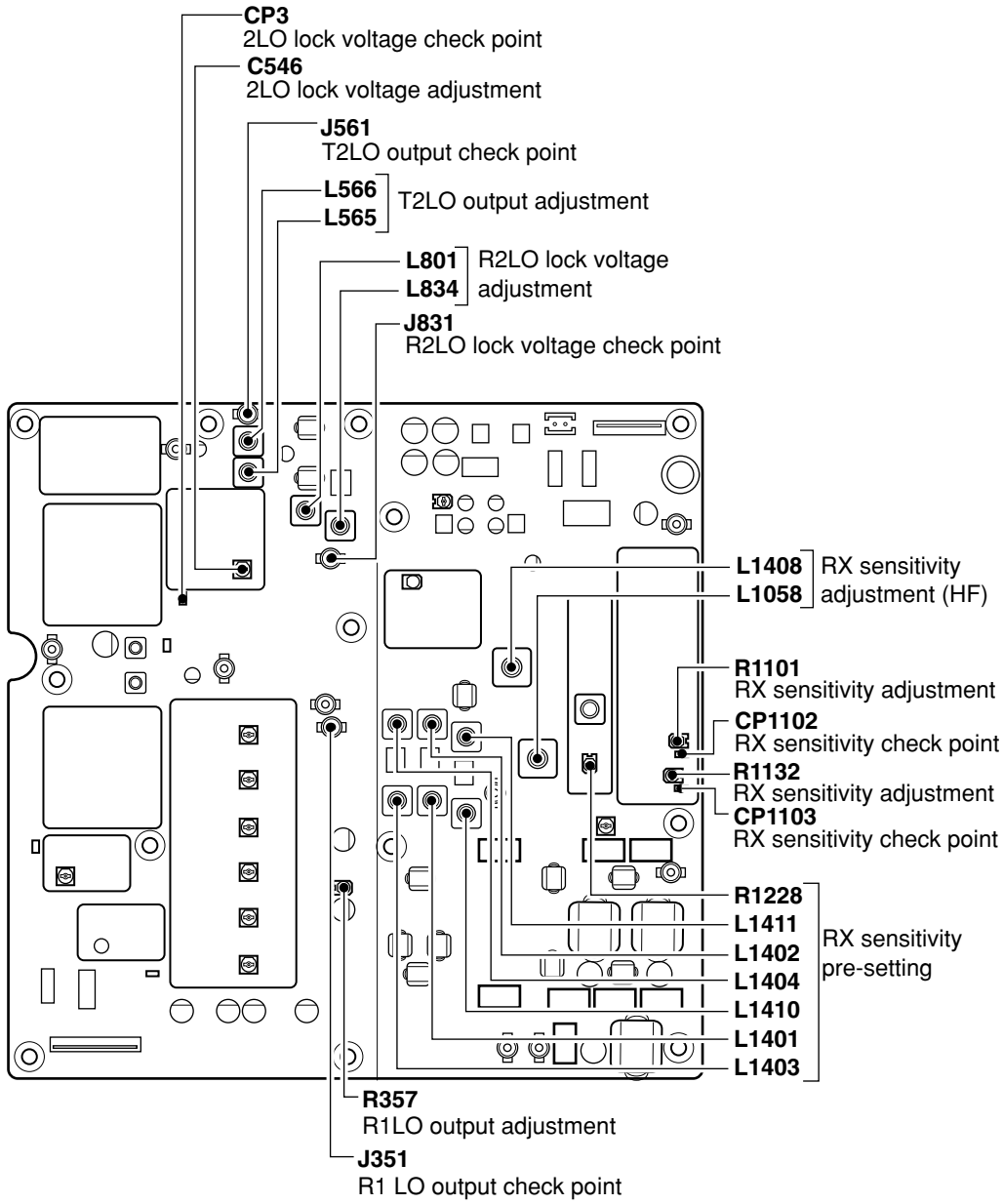

## RXPLL-A UNIT ADJUSTMENTS–Continued

| ADJUSTMENT | | ADJUSTMENT CONDITION | MEASUREMENT | | VALUE | ADJUSTMENT POINT | |
|---|---|---|---|---|---|---|---|
| | | | UNIT | LOCATION | | UNIT | ADJUST |
| IMAGE RESPONSE | 1 | • MAIN display frequency : 14.150 MHz<br>• Mode : USB<br>• Connect an SSG to [ANT1] connector and set as;<br>Frequency : 14.0765 MHz<br>Level : 50 mV* (–13 dBm)<br>Modulation : OFF<br>• Receiving | Rear panel | Connect an AC millivolt meter to [EXT SP] jack with 8 Ω load. | Minimum audio level | RX PLL-A | Adjust repeatedly R1516, C1656 |
| RX SENSITIVITY (50 MHz) | 1 | • MAIN display frequency : 50.020 MHz<br>• Mode : USB<br>• Pre-amp. 2 : ON<br>• Connect an SSG to [ANT1] connector and set as;<br>Frequency : 50.0215 MHz<br>Level : 0.32 µV* (–117 dBm)<br>Modulation : OFF<br>• Receiving | Rear panel | Connect an AC millivolt meter to [EXT SP] jack with 8 Ω load. | Maximum audio level | RX PLL-A | L1222 |
| IF THROUGH (50 MHz) | 1 | • MAIN display frequency : 50.020 MHz<br>• Mode : USB<br>• Connect an SSG to [ANT1] connector and set as;<br>Frequency : 64.455 MHz<br>Level : 50 mV* (–13 dBm)<br>Modulation : OFF<br>• Receiving | Front panel | S-meter | Minimum level | RX PLL-A | C1265 |

*This output level of a standard signal generator (SSG) is indicated as SSG's open circuit.

**• RXPLL-A UNIT TOP VIEW**

**• LOCATION**

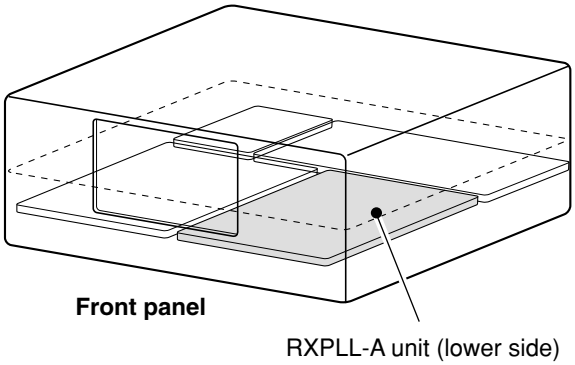


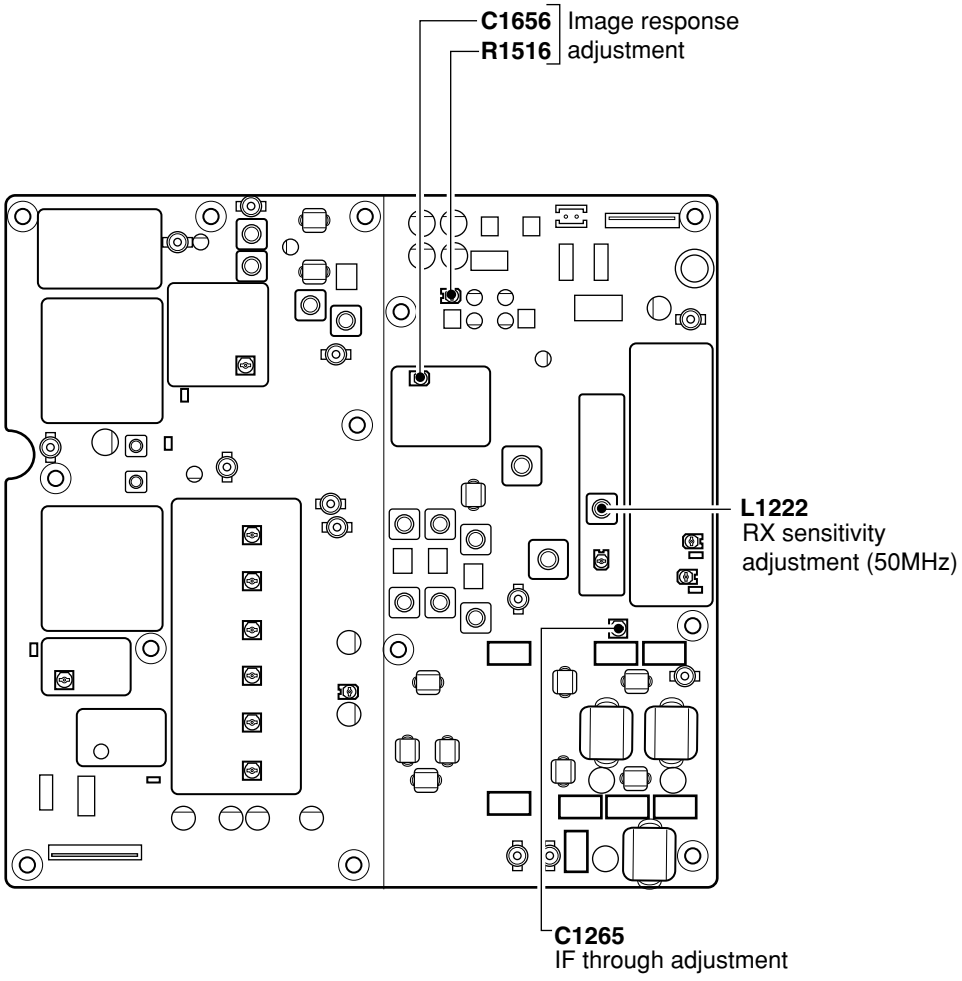

## 4-4 RXPLL-B UNIT ADJUSTMENTS

| ADJUSTMENT | | ADJUSTMENT CONDITION | MEASUREMENT | | VALUE | ADJUSTMENT POINT | |
|---|---|---|---|---|---|---|---|
| | | | UNIT | LOCATION | | UNIT | ADJUST |
| 40M OUTPUT | 1 | • Dualwatch : ON<br>• SUB display frequency : 60.000 MHz<br>• Mode : USB<br>• Receiving | RX PLL-B | Connect an RF voltmeter to CP701 (40 MHz). | Maximum voltage | RX PLL-B | Adjust repeatedly L702, L703 |
| LPL LOCK VOLTAGE | 1 | • SUB display frequency : 60.000 MHz<br>• Mode : USB<br>• Receiving | RX PLL-B | Connect a DC voltmeter to CP1 (LV1). | 2.0 V ±0.1 V | RX PLL-B | C154 |
| | 2 | • SUB display frequency : 1.499 MHz<br>• Mode : USB<br>• Receiving | | | Less than 4.0 V | | Verify |
| HPL LOCK VOLTAGE (VCO1) | 1 | • SUB display frequency : 7.999 MHz<br>• Mode : USB<br>• Receiving | RX PLL-B | Connect a DC voltmeter to CP2 (LV2). | 4.0 V ±0.1 V | RX PLL-B | C222 |
| (VCO2) | 2 | • SUB display frequency : 14.999 MHz<br>• Mode : USB<br>• Receiving | | | 4.0 V ±0.1 V | | C232 |
| (VCO3) | 3 | • SUB display frequency : 21.999 MHz<br>• Mode : USB<br>• Receiving | | | 4.0 V ±0.1 V | | C242 |
| (VCO4) | 4 | • SUB display frequency : 29.999 MHz<br>• Mode : USB<br>• Receiving | | | 4.0 V ±0.1 V | | C252 |
| (VCO5) | 5 | • SUB display frequency : 44.999 MHz<br>• Mode : USB<br>• Receiving | | | 4.0 V ±0.1 V | | C262 |
| (VCO6) | 6 | • SUB display frequency : 60.000 MHz<br>• Mode : USB<br>• Receiving | | | 4.0 V ±0.1 V | | C272 |
| (VCO1) | 7 | • SUB display frequency : 0.030 MHz<br>• Mode : USB<br>• Receiving | RX PLL-B | Connect a DC voltmeter to CP2 (LV2). | 1.2 V–2.0 V | RX PLL-B | Verify |
| (VCO2) | 8 | • SUB display frequency : 8.000 MHz<br>• Mode : USB<br>• Receiving | | | 1.2 V–2.0 V | | Verify |
| (VCO3) | 9 | • SUB display frequency : 15.000 MHz<br>• Mode : USB<br>• Receiving | | | 1.2 V–2.0 V | | Verify |
| (VCO4) | 10 | • SUB display frequency : 22.000 MHz<br>• Mode : USB<br>• Receiving | | | 1.2 V–2.0 V | | Verify |
| (VCO5) | 11 | • SUB display frequency : 30.000 MHz<br>• Mode : USB<br>• Receiving | | | 1.2 V–2.0 V | | Verify |

**• RXPLL-B UNIT TOP VIEW**

**• LOCATION**

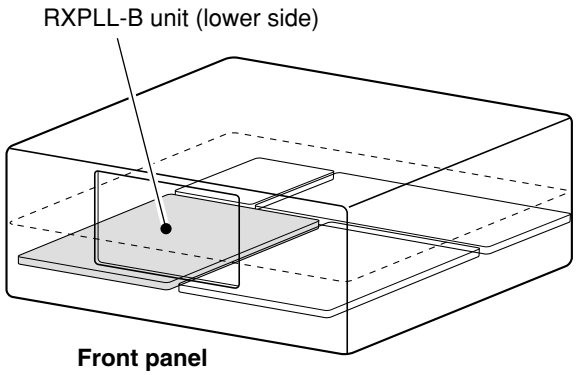


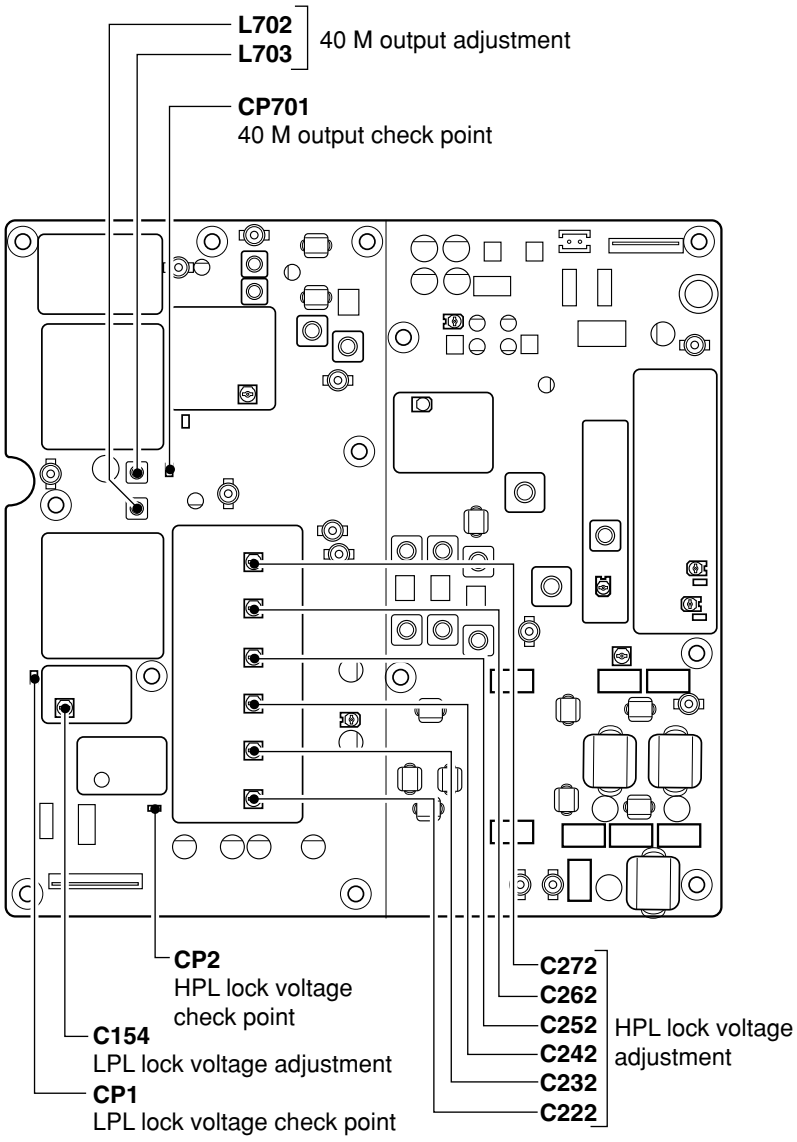

## RXPLL-B UNIT ADJUSTMENTS–Continued

| ADJUSTMENT | | ADJUSTMENT CONDITION | MEASUREMENT | | VALUE | ADJUSTMENT POINT | |
|---|---|---|---|---|---|---|---|
| | | | UNIT | LOCATION | | UNIT | ADJUST |
| HPL LOCK VOLTAGE (VCO6) | 12 | • SUB display frequency : 45.000 MHz<br>• Mode : USB<br>• Receiving | RX PLL-B | Connect a DC voltmeter to CP2 (LV2). | 1.2 V–2.0 V | RX PLL-B | Verify |
| S1 LO OUTPUT | 1 | • SUB display frequency : 14.999 MHz<br>• Mode : USB<br>• Receiving | RX PLL-B | Connect an RF voltmeter to J351 (S1LO). | 2.25 dBm ±0.25 dB | RX PLL-B | R357 |
| 2LO LOCK VOLTAGE | 1 | • SUB display frequency : 14.100 MHz<br>• Mode : USB<br>• Receiving | RX PLL-B | Connect a DC voltmeter to CP3. | 3.0 V ±0.3 V | RX PLL-B | C546 |
| 2LO OUTPUT | 1 | • MAIN display frequency : 14.100 MHz<br>• Mode : USB<br>• Receiving | RX PLL-B | Connect a spectrum analyzer to J561 (2LO). | Maximum level (–9.0 dBm ±3.0 dB) | RX PLL-B | Adjust repeatedly L565, L566 |
| RX SENSITIVITY (HF) | 1 | Pre-set the IC-7800 as the following condition.<br>• SUB display frequency : 14.150 MHz<br>• Mode : USB<br>• Dualwatch : ON<br>• MAIN Ant. : ANT2<br>• SUB Ant. : ANT1<br>• Pre-amp. 1 : ON<br>• MAIN AF : Minimum level<br>• Receiving | RX PLL-B | Connect a DC voltmeter to CP1102. | 4.5 V ±0.1 V | RX PLL-B | R1101 |
| | | | | Connect a DC voltmeter to CP1103. | 4.5 V ±0.1 V | RX PLL-B | R1132 |
| | | | | Per-set L1401, L1402, L1403, L1404, L1405 and L1406 as the illustration at right. | Center position | RX PLL-B | R1228 |
| | | | | | 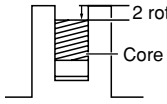  | RX PLL-B | L1401, L1402 |
| | | | | | 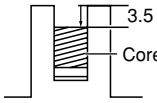  | RX PLL-B | L1403, L1404 |
| | | | | | 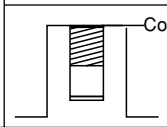  | RX PLL-B | L1410, L1411 |
| | 2 | • SUB display frequency : 14.150 MHz<br>• Mode : USB<br>• Connect an SSG to [ANT1] connector and set as;<br>Frequency : 14.1515 MHz<br>Level : 1 µV* (–107 dBm)<br>Modulation : OFF<br>• Receiving | Rear panel | Connect an AC millivolt meter to [EXT SP] jack with 8 Ω load. | Maximum audio level | RX PLL-B | L1408, L1058 |
| IMAGE RESPONSE | 1 | • SUB display frequency : 14.150 MHz<br>• Mode : USB<br>• Connect an SSG to [ANT1] connector and set as;<br>Frequency : 14.0765 MHz<br>Level : 50 mV* (–13 dBm)<br>Modulation : OFF<br>• Receiving | Rear panel | Connect an AC millivolt meter to [EXT SP] jack with 8 Ω load. | Minimum audio level | RX PLL-B | R1516, C1656 |

*This output level of a standard signal generator (SSG) is indicated as SSG's open circuit.

**• RXPLL-B UNIT TOP VIEW**

**• LOCATION**

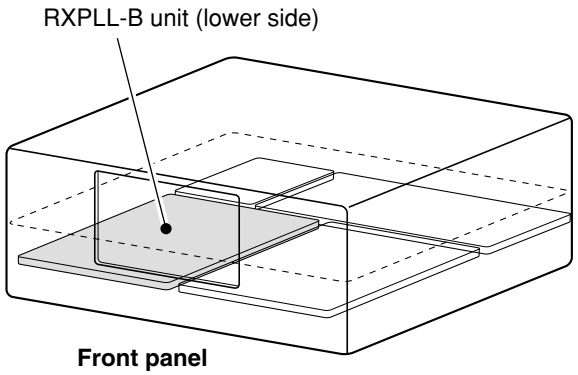


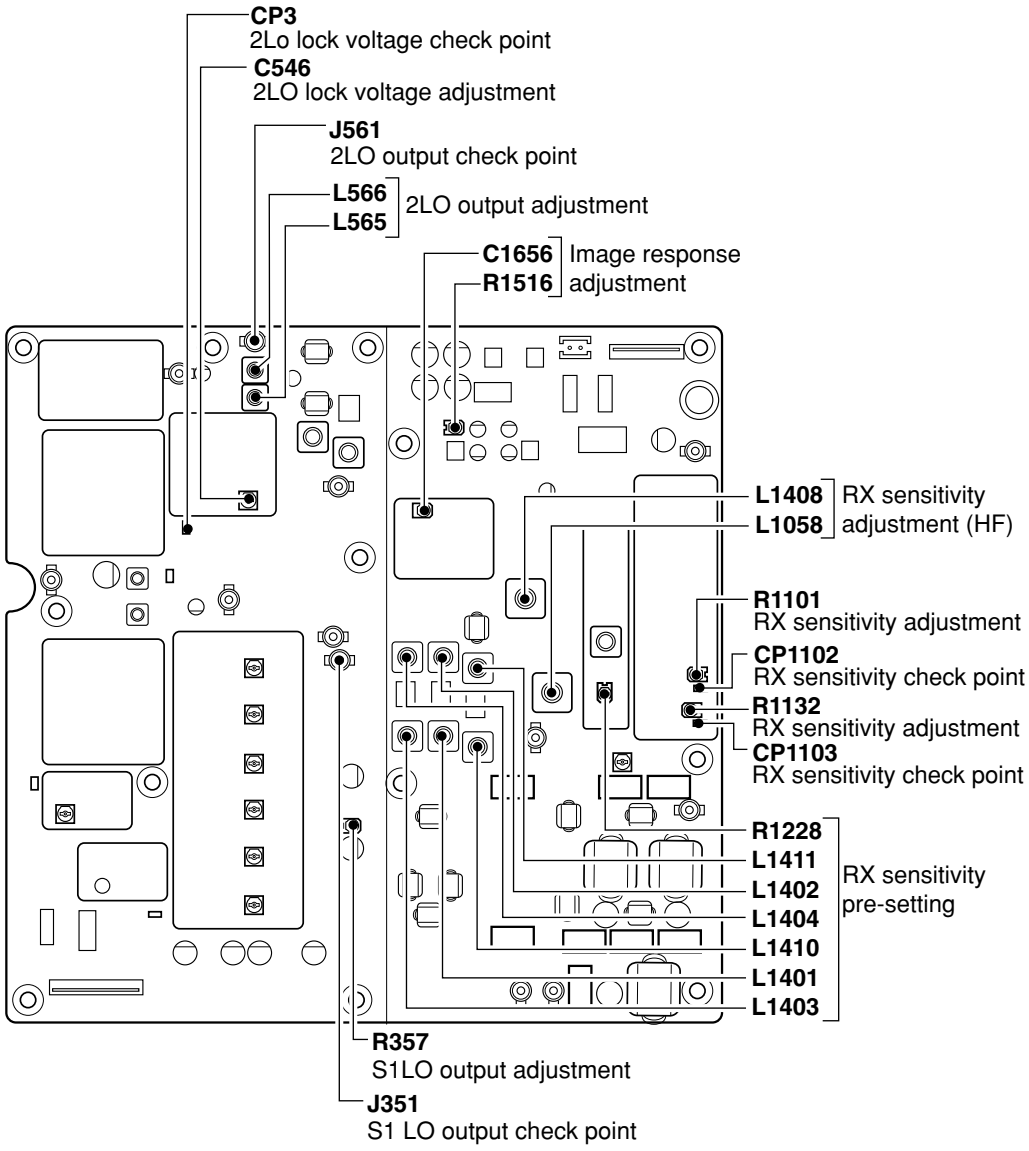

## RXPLL-B UNIT ADJUSTMENTS–Continued

| ADJUSTMENT | | ADJUSTMENT CONDITION | MEASUREMENT | | VALUE | ADJUSTMENT POINT | |
|---|---|---|---|---|---|---|---|
| | | | UNIT | LOCATION | | UNIT | ADJUST |
| RX SENSITIVITY (50 MHz) | 1 | • SUB display frequency : 50.020 MHz<br>• Mode : USB<br>• Pre-amp. 2 : ON<br>• Connect an SSG to [ANT1] connector and set as;<br>Frequency : 50.0215 MHz<br>Level : 0.32 µV* (–117 dBm)<br>Modulation : OFF<br>• Receiving | Rear panel | Connect an AC millivolt meter to [EXT SP] jack with 8 Ω load. | Maximum audio level | RX PLL-B | L1222 |
| IF THROUGH (50 MHz) | 1 | • SUB display frequency : 50.020 MHz<br>• Mode : USB<br>• Connect an SSG to [ANT1] connector and set as;<br>Frequency : 64.555 MHz<br>Level : 50 mV* (–13 dBm)<br>Modulation : OFF<br>• Receiving | Front panel | S-meter | Minimum level | RX PLL-B | C1265 |

*This output level of a standard signal generator (SSG) is indicated as SSG's open circuit.

**• RXPLL-B UNIT TOP VIEW**

**• LOCATION**

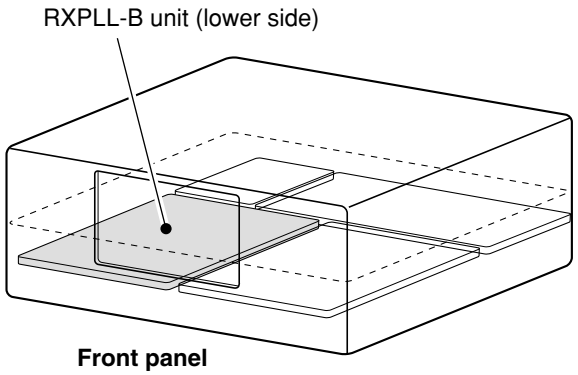


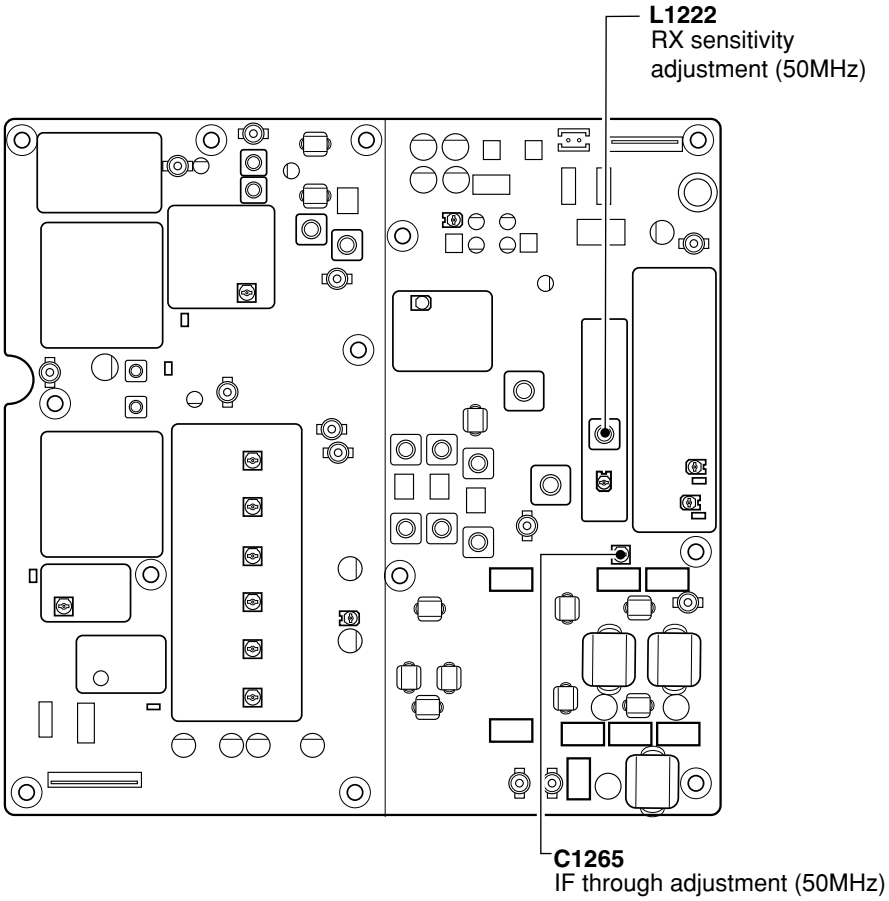

## 4-5 PA200W BOARD ADJUSTMENTS

| ADJUSTMENT | | ADJUSTMENT CONDITION | MEASUREMENT | | VALUE | ADJUSTMENT POINT | |
|---|---|---|---|---|---|---|---|
| | | | UNIT | LOCATION | | UNIT | ADJUST |
| IDLING CURRENT (For driver) | 1 | • Preset R301, R407 and R410 on the PA200W unit to max. CCW.*<br>• [MIC] gain : max. CCW*<br>• Main display frequency : 14.100 MHz<br>• Mode : USB<br>• Apply no audio signals to [MIC] connector.<br>• Transmitting | PA200W | Connect a DC ammeter between W1 and EP501. | 1.0 A higher from the previous value of the adjustment. | PA200W | R301 |
| (For final amplifier) | 2 | | | | 1.0 A higher from the previous value of the adjustment. | | R407, R425 |
| | 3 | | | | 1.0 A higher from the previous value of the adjustment. | | R410, R426 |

*CCW: Counter clockwise

**• PA200W BOARD TOP VIEW**

**• LOCATION**

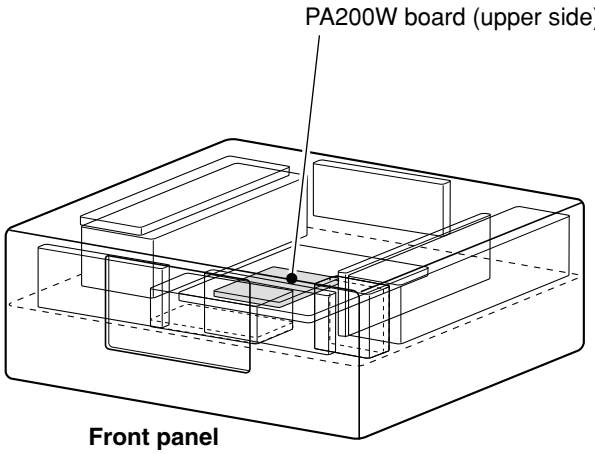


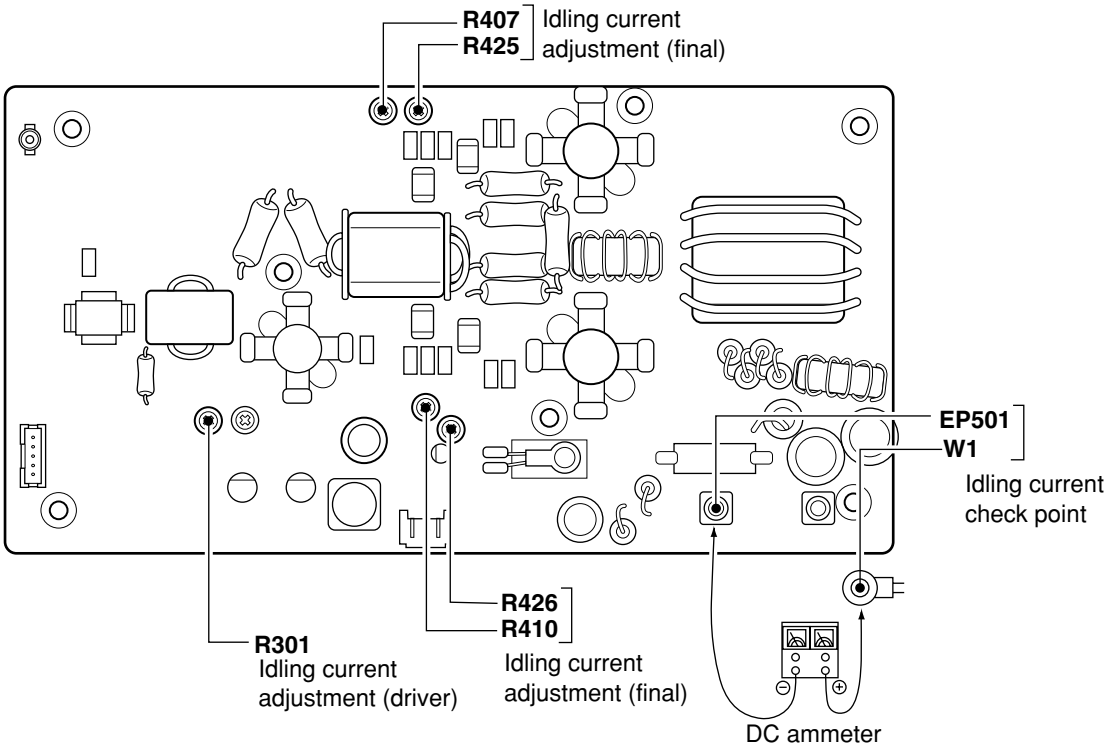

## 4-6 TUNER ADJUSTMENT

| ADJUSTMENT | | ADJUSTMENT CONDITION | MEASUREMENT | | VALUE | ADJUSTMENT POINT | |
|---|---|---|---|---|---|---|---|
| | | | UNIT | LOCATION | | UNIT | ADJUST |
| SWR DETECTOR | 1 | • Main display frequency : 24.950 MHz<br>• Mode : FM<br>• [RF POWER] : Max. CW (200W)<br>• [TUNER] : Through<br>• APC : OFF<br>• Connect a 50 Ω dummy load to [ANT1] connector.<br>• Transmitting | CTRL | Connect a DC voltmeter or oscilloscope to CP101 (REF). | Minimum voltage | CTRL | C104 |
| | | **ADJUSTMENT CONDITION** | **DISPLAY** | | **OPERATION** | | |
| TUNER REFERENCE | 1 | • Enter the tuner adjustment mode:<br>① Turn power OFF.<br>② Terminate [REMOTE] jack with a 2-conductor 3.5(d) mm mini-plug.<br>③ While pushing [M.SCOPE] and [EXIT/SET], turn power ON. | TUNER-ADJUST MODE | | Push [F-7 (START)] to start tuning. | | |
| | 2 | | -- TUNER --<br>Adjusting Now | | Verify the display shows “Adjusting Now”. | | |
| | 3 | | -- TUNER --<br>OK | | Verify the display shows “OK”. | | |

**• CTRL BOARD TOP VIEW**

**• LOCATION**

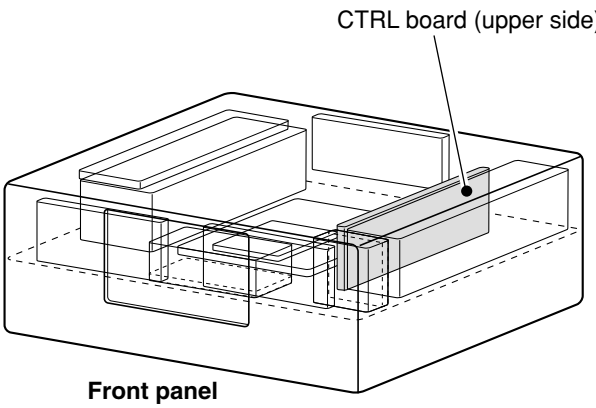


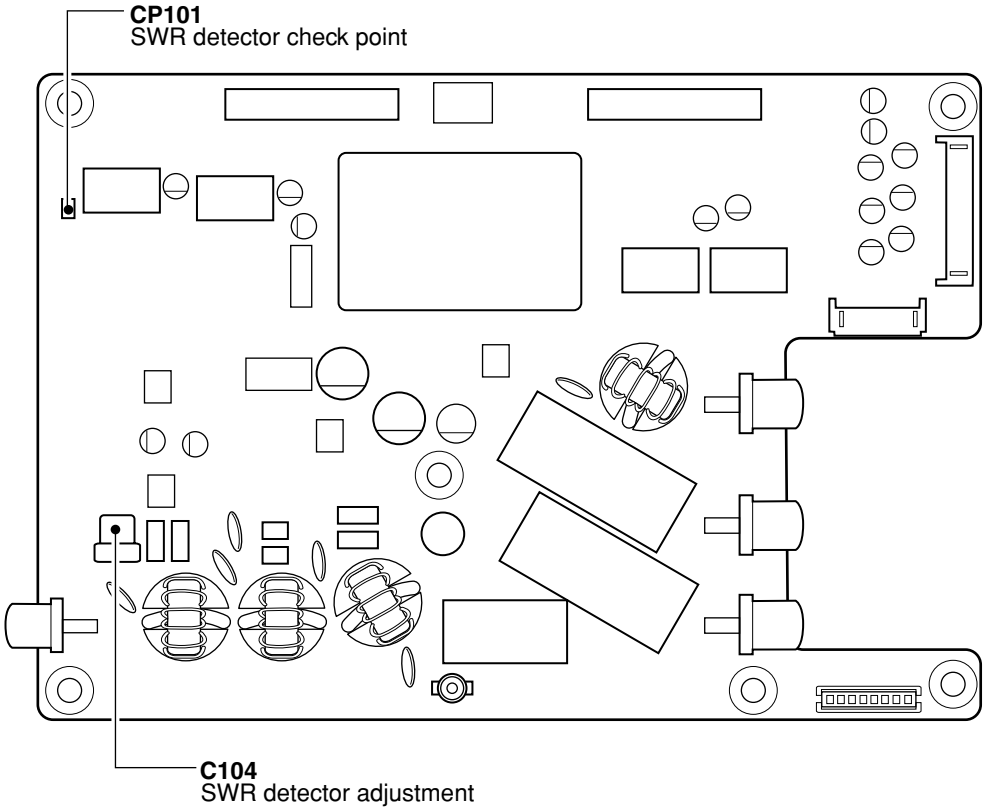

## 4-7 MAIN UNIT ADJUSTMENTS

| ADJUSTMENT | | ADJUSTMENT CONDITION | MEASUREMENT | | VALUE | ADJUSTMENT POINT | |
|---|---|---|---|---|---|---|---|
| | | | UNIT | LOCATION | | UNIT | ADJUST |
| MAXIMUM OUTPUT POWER | 1 | • Turn the power OFF<br>• Perform the all reset operation; push and hold [F-INP] and [MW], then power ON.<br>**NOTE:** Save the memory contents and set mode setting conditions into the CF memory card is recommented.<br>• Preset R93 to 3 o'clock position.<br>• Receiving | MAIN | Connect a digital multimeter or oscilloscope to CP82. | 0.5 V ±0.2 V | MAIN | R69 |
| | 2 | • Connect an audio generator to [MIC] connector and set as;<br>Frequency : 1.5 kHz<br>Level : 1 mV<br>• Transmitting | Rear panel | Connect an RF power meter to [ANT1] connector. | Maximum output power | MAIN | Adjust in sequence repeatedly L505, C576, L512 |
| RESIDUAL AM | 1 | • Mode : FM<br>• Connect an audio generator to [MIC] connector and set as;<br>Frequency : 1.0 kHz<br>Level : 10 mV<br>• Transmitting | Rear panel | Connect an RF power meter to [ANT1] connector. | Minimum level difference between an audio generator is ON and OFF. | MAIN | C576 |
| TX TOTAL GAIN | 1 | • MAIN display frequency : 14.100 MHz<br>• Mode : USB<br>• [MIC] gain : 12 o'clock position<br>• Connect an audio generator to [MIC] connector and set as;<br>Frequency : 1.5 kHz<br>Level : 1 mV<br>• Transmitting | Rear panel | Connect an RF power meter to [ANT1] connector. | 130 W | MAIN | R538 |
| HIGH POWER (HF) | 1 | • MAIN display frequency : 14.100 MHz<br>• Mode : RTTY<br>• Transmitting | Rear panel | Connect an RF power meter to [ANT1] connector. | 200 W | MAIN | R81 |
| (50 MHz) | 2 | • MAIN display frequency : 50.100 MHz<br>• Mode : RTTY<br>• Transmitting | | | 200 W | | R79 |
| AM CARRIER POWER | 1 | • MAIN display frequency : 14.100 MHz<br>• Mode : AM<br>• Apply no audio signals to [MIC] connector.<br>• Transmitting | Rear panel | Connect an RF power meter to [ANT1] connector. | 55 W | MAIN | R82 |
| Id-APC | 1 | • MAIN display frequency : 14.100 MHz<br>• Mode : RTTY<br>• Connect CP81 to GND.<br>• Preset R93 to 90˚ CCW.*<br>• Transmitting | PA | Connect a DC ammeter between W1 and EP501. | 12 A | MAIN | R93 |

*CCW: Counter clockwise

## • PA200W BOARD TOP VIEW

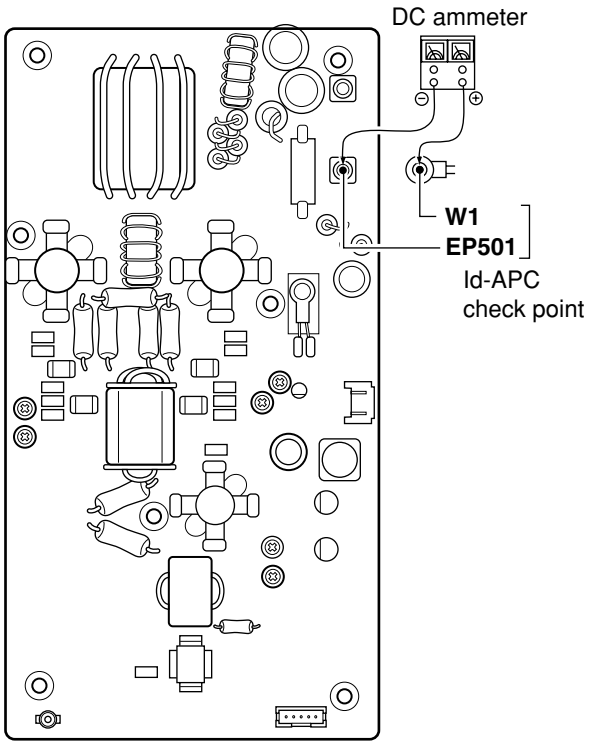


## • LOCATION

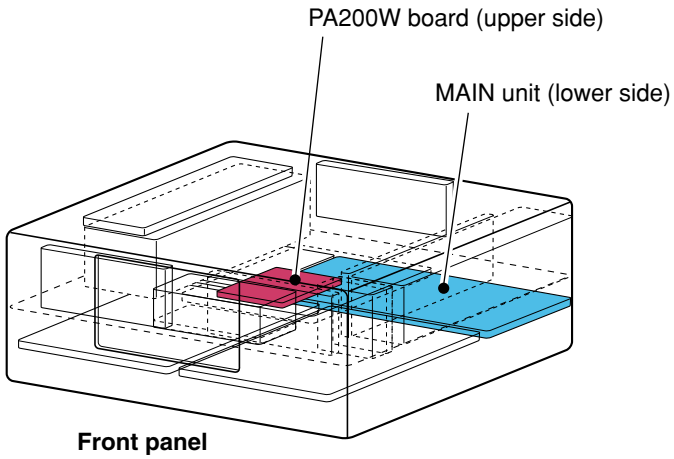


## • MAIN UNIT TOP VIEW

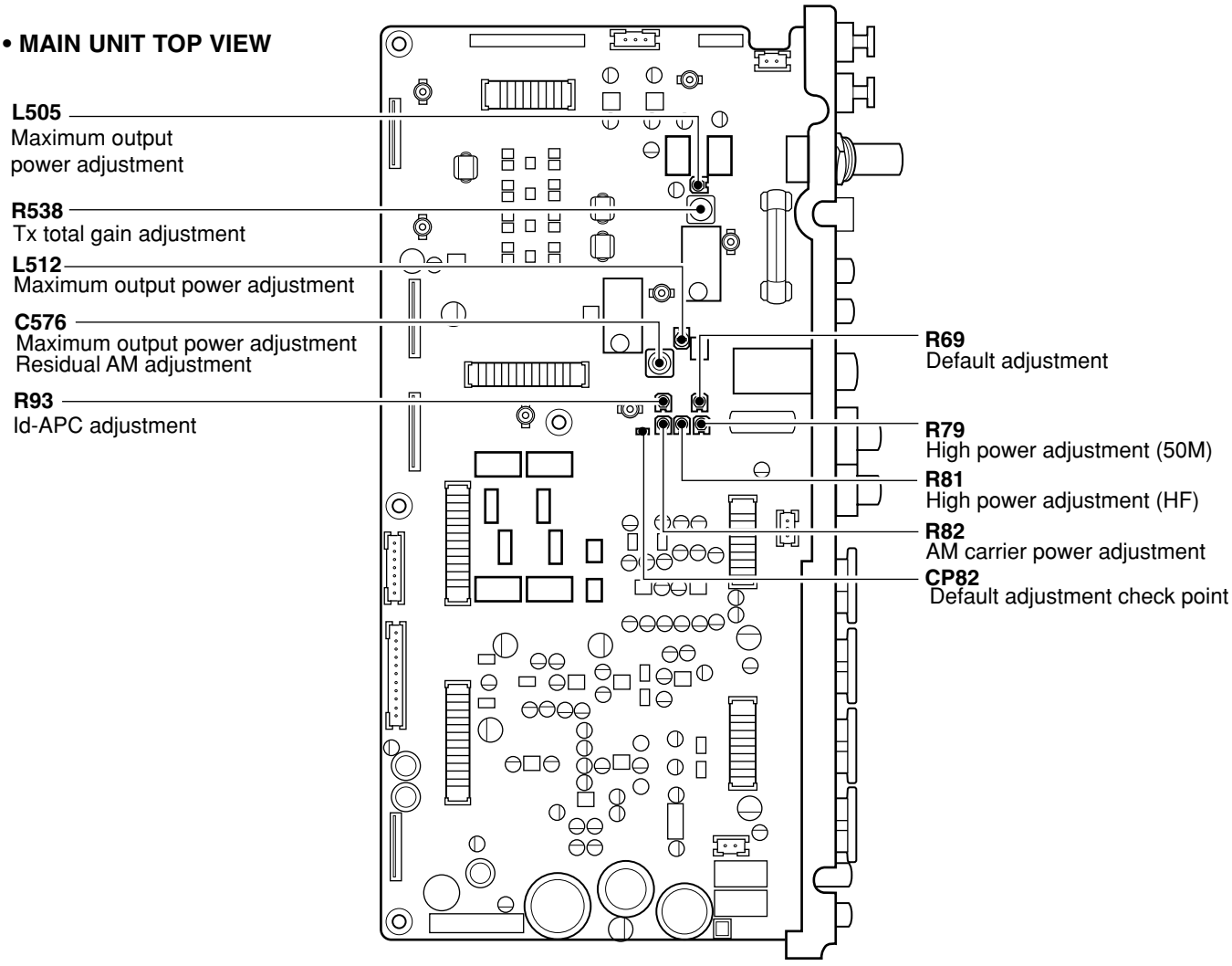

## 4-8 SCOPE UNIT ADJUSTMENTS

| ADJUSTMENT | | ADJUSTMENT CONDITION | MEASUREMENT | | VALUE | ADJUSTMENT POINT | |
|---|---|---|---|---|---|---|---|
| | | | UNIT | LOCATION | | UNIT | ADJUST |
| S3 LO LOCK VOLTAGE | 1 | Pre-set the IC-7800 as the following condition.<br>• MAIN display frequency : 14.200 MHz<br>• Mode : CW<br>• Dualwatch : OFF<br>• Pre-amp. : OFF<br>• Attenuator : OFF<br>• Scope : ON<br>• Scope attenuator: OFF<br>• Span : ±25 kHz<br>• Receiving | SCOPE | Connect a digital voltmeter to CP801. | 2.5 V | SCOPE | C824 |
| SCOPE | 1 | • Connect an SSG to [ANT1] connector and set as;<br>Frequency : 14.200 MHz<br>Level : 500 µV* (–53 dBm)<br>Modulation: OFF<br>• Receiving | Front panel | Scope wave on the LCD. | Maximum wave form | SCOPE | Adjust in sequence L203, L202, L201, L5, L6, C41, and repeatedly adjust L5, L6 and C41 in sequence. |
| | 2 | • Connect an SSG to J1 and set as;<br>Frequency : 71.715 MHz<br>Level : 100 mV* (–7 dBm)<br>Modulation: OFF<br>• Receiving | | | Minimum wave form | | C41 |
| | 3 | • Connect an SSG to [ANT1] connector and set as;<br>Frequency : 14.200 MHz<br>Level : 500 µV* (–53 dBm)<br>Modulation: OFF<br>• Receiving | | | Maximum wave form | | Adjust L5, L6, repeatedly. |
| SCOPE GAIN | 1 | • MAIN display frequency : 14.200 MHz<br>• Mode : CW<br>• Connect an SSG to [ANT1] connector and set as;<br>Frequency : 14.200 MHz<br>Level : 500 µV* (–53 dBm)<br>Modulation: OFF<br>• Receiving | Front panel | Scope wave on the LCD. | Set peak of scope wave form to 6 scales in the scope screen<br> 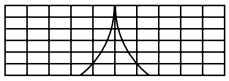 | SCOPE | R416 |
| SCOPE ATTENUATOR | 1 | • MAIN display frequency : 14.200 MHz<br>• Mode : CW<br>• Scope attenuator: 30 dB<br>• Connect an SSG to [ANT1] connector and set as;<br>Frequency : 14.200 MHz<br>Level : 500 µV* (–53 dBm)<br>Modulation: OFF<br>• Receiving | Front panel | Scope wave on the LCD. | Set peak of scope wave form to 3 scales in the scope screen.<br> 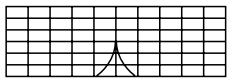 | SCOPE | R11 |

*This output level of a standard signal generator (SSG) is indicated as SSG's open circuit.

**• SCOPE UNIT TOP VIEW**

**• LOCATION**

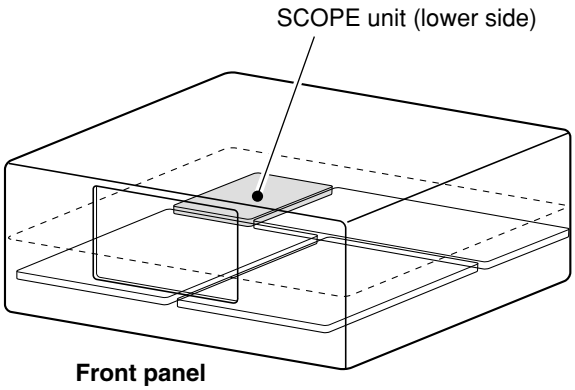


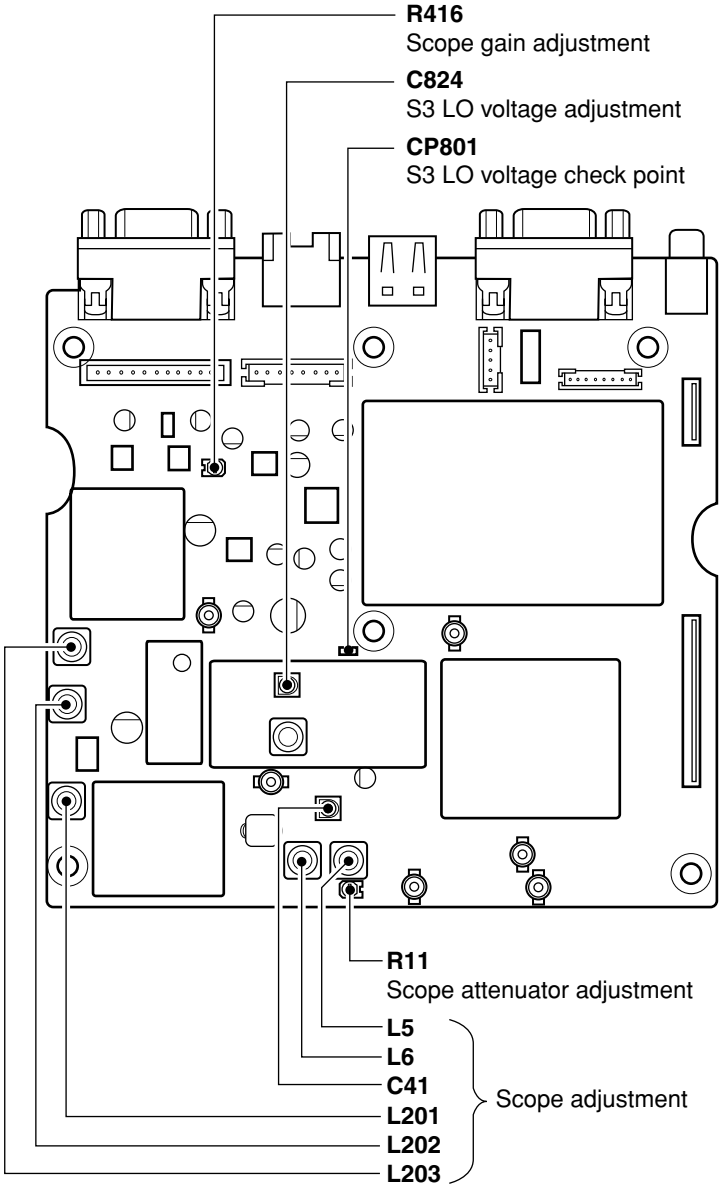

## 4-9 SOFTWARE ADJUSTMENTS

| ADJUSTMENT | | ADJUSTMENT CONDITION | DISPLAY | OPERATION |
|---|---|---|---|---|
| ENTERING ADJUSTMENT MODE | 1 | • Enter the adjustment mode:<br>① Turn power OFF.<br>② Terminate [REMOTE] jack with a 2-conductor 3.5(d) mm mini-plug.<br>③ While pushing [SSB] and [CW], turn power ON. | ADJUST MODE | Push [F-2 (REF)], [F-3 (TX)] or [F-4 (RX)] to select each adjustment mode.<br>Once entering adjustment mode, use [F-1 (▲)] to return items, [F-2 (▼)] to skip items, or [F-3 (EXIT)] to return the opening screen. |
| | | **CAUTION:**<br>**NEVER** push [F-3 (TX)] when an SSG is connected to the transceiver. Because transceiver automatically transmits when [F-3 (TX)] is pushed. | | |
| HF PO METER | 1 | • Connect an audio generator to [MIC] connector and set as;<br>Frequency : 1.5 kHz<br>Level : 10 mV<br>• Connect an RF power meter to [ANT1] connector.<br>• Connect a 100 Ω dummy load to [ANT2] connector.<br>• Push [F-3 (TX)] to enter the TX adjustment mode. | POWER HF/50M 0W | Push [F-7 (SET)] to store the "0 W" meter indication into memory, and selects the next adjustment item. |
| | 2 | | POWER HF 10W | Rotate [MAIN DIAL] to set the RF output power become 10 W.<br>Push [F-7 (SET)] to set 10 W power meter indication and selects the next adjustment item. |
| | 3 | | POWER HF 50W | Rotate [MAIN DIAL] to set the RF output power become 50 W.<br>Push [F-7 (SET)] to set 50 W power meter indication and selects the next adjustment item. |
| | 4 | | POWER HF 100W | Rotate [MAIN DIAL] to set the RF output power become 100 W.<br>Push [F-7 (SET)] to set 100 W power meter indication and selects the next adjustment item. |
| | 5 | | POWER HF 150W | Rotate [MAIN DIAL] to set the RF output power become 150 W.<br>Push [F-7 (SET)] to set 150 W power meter indication and selects the next adjustment item. |
| | 6 | | POWER HF 200W | Rotate [MAIN DIAL] to set the RF output power become 195 W.<br>Push [F-7 (SET)] to set 200 W power meter indication and selects the next adjustment item. |
| 50 MHz PO METER | 1 | | POWER 50M 10W | Rotate [MAIN DIAL] to set the RF output power become 10 W.<br>Push [F-7 (SET)] to set 10 W power meter indication and selects the next adjustment item. |
| | 2 | | POWER 50M 50W | Rotate [MAIN DIAL] to set the RF output power become 50 W.<br>Push [F-7 (SET)] to set 50 W power meter indication and selects the next adjustment item. |
| | 3 | | POWER 50M 100W | Rotate [MAIN DIAL] to set the RF output power become 100 W.<br>Push [F-7 (SET)] to set 100 W power meter indication and selects the next adjustment item. |
| | 4 | | POWER 50M 150W | Rotate [MAIN DIAL] to set the RF output power become 150 W.<br>Push [F-7 (SET)] to set 150 W power meter indication and move to the next step. |
| | 5 | | POWER 50M 200W | Rotate [MAIN DIAL] to set the RF output power become 195 W.<br>Push [F-7 (SET)] to set 200 W power meter indication and selects the next adjustment item. |
| RESERVE POWER SET | 1 | | RESERVE POWER SET | Push [F-7 (SET)] to memorize the setting, and selects the next adjustment item. |
| POWER SET (power down) | 1 | | Power for Power Down HF/50M | Set the RF output power to 100 W with [MAIN DIAL].<br>Push [F-7 (SET)] to set the RF power level and selects the next adjustment item. |
| ALC METER | 1 | | ALC | Push [F-7 (SET)] to set the ALC meter and selects the next adjustment item. |

## SOFTWARE ADJUSTMENTS–Continued

| ADJUSTMENT | | ADJUSTMENT CONDITION | DISPLAY | OPERATION |
|---|---|---|---|---|
| DRIVE LEVEL | 1 | • Connect an audio generator to [MIC] connector and set as;<br>Frequency : 1.5 kHz<br>Level : 10 mV<br>• Connect an RF power meter to [ANT1] connector.<br>• Connect a 100 Ω dummy load to [ANT2] connector. | DRIVE | Push [F-7 (SET)] to set the DRIVE level and selects the next adjustment item. |
| Vd METER | 1 | | Vd48V | Push [F-7 (SET)] to set the Vd meter indication and selects the next adjustment item. |
| Id METER | 1 | | Id 0A | Push [F-7 (SET)] to set the 0 A meter indication and selects the next adjustment item. |
| | 2 | | Id 5A | Rotate [MAIN DIAL] to set the driving current become 5 A.<br>Push [F-7 (SET)] to set the 5 A meter indication and selects the next adjustment item |
| | 3 | | Id 10A | Rotate [MAIN DIAL] to set the driving current become 10 A.<br>Push [F-7 (SET)] to set the 10 A meter indication and selects the next adjustment item |
| SWR METER | 1 | | SWR | Push [F-7 (SET)] to set the SWR meter indication and return to the opening screen. |
| TOTAL GAIN | 1 | • Push [F4 (RX)] to enter the RX adjustment mode.<br>• Connect an SSG to [ANT1] connector and set as;<br>Frequency : 14.1515 MHz<br>Level : 1 mV* (–47 dBm)<br>Modulation : OFF<br>• Connect an AC millivolt meter to [SP] jack with an 8 Ω load. | Total Gain A HF PRE OFF | Rotate [MAIN DIAL] to set 30dB of AF level difference between 1 mV and no signal input from the SSG.<br>Push [F-7 (SET)] to set the HF A total gain and selects the next adjustment item. |
| | 2 | | Total Gain A HF PRE ON | Rotate [MAIN DIAL] to set 30dB of AF level difference between 1 mV and no signal input from the SSG.<br>Push [F-7 (SET)] to set the HF A total gain and selects the next adjustment item. |
| | 3 | • Set an SSG as;<br>Frequency : 50.1515 MHz<br>Level : 1 mV* (–47 dBm) | Total Gain A 50M PRE OFF | Rotate [MAIN DIAL] to set 30dB of AF level difference between 1 mV and no signal input from the SSG.<br>Push [F-7 (SET)] to set the 50 M A total gain and selects the next adjustment item. |
| | 4 | | Total Gain A 50M PRE ON | Rotate [MAIN DIAL] to set 30dB of AF level difference between 1 mV and no signal input from the SSG.<br>Push [F-7 (SET)] to set the 50 M A total gain and selects the next adjustment item. |
| | 5 | • Set an SSG as;<br>Frequency : 14.1515 MHz<br>Level : 1 mV* (–47 dBm) | Total Gain B HF PRE OFF | Rotate [MAIN DIAL] to set 30dB of AF level difference between 1 mV and no signal input from the SSG.<br>Push [F-7 (SET)] to set the HF B total gain and selects the next adjustment item. |
| | 6 | | Total Gain B HF PRE ON | Rotate [MAIN DIAL] to set 30dB of AF level difference between 1 mV and no signal input from the SSG.<br>Push [F-7 (SET)] to set the HF B total gain and selects the next adjustment item. |
| | 7 | • Set an SSG as;<br>Frequency : 50.1515 MHz<br>Level : 1 mV* (–47 dBm) | Total Gain B 50M PRE OFF | Rotate [MAIN DIAL] to set 30dB of AF level difference between 1 mV and no signal input from the SSG.<br>Push [F-7 (SET)] to set the 50 M B total gain and selects the next adjustment item. |
| | 8 | | Total Gain B 50M PRE ON | Rotate [MAIN DIAL] to set 30dB of AF level difference between 1 mV and no signal input from the SSG.<br>Push [F-7 (SET)] to set the 50 M B total gain and selects the next adjustment item. |

*This output level of a standard signal generator (SSG) is indicated as SSG's open circuit.

## SOFTWARE ADJUSTMENTS–Continued

| ADJUSTMENT | | ADJUSTMENT CONDITION | DISPLAY | OPERATION |
|---|---|---|---|---|
| EXTERNAL AGC | 1 | • Connect an SSG to [ANT1] connector and set as;<br>Frequency : 14.1515 MHz<br>Level : 3.2 mV* (–37 dBm)<br>Modulation : OFF | AGC(RX-DSP)A | Push [F-7 (SET)] to set the external AGC level and selects the next adjustment item. |
| | 2 | | AGC(RX-DSP)B | Push [F-7 (SET)] to set the external AGC level and selects the next adjustment item. |
| HF S-METER | 1 | • Set the SSG as;<br>Frequency : 14.1515 MHz<br>Level : OFF | HF S0 LEVEL | • Push [F-7 (SET)] to set the HF S0 meter indication and selects the next adjustment item.<br>**NEVER** change the SSG output level until 2 short beeps are sound. |
| | 2 | • Set the SSG as;<br>Level : 50 µV* (–73 dBm) | HF S9 LEVEL | • Push [F-7 (SET)] to set the HF S9 meter indication and selects the next adjustment item.<br>**NEVER** change the SSG output level until 2 short beeps are sound. |
| | 3 | • Set the SSG as:<br>Level : 50 mV* (–13 dBm) | S9+60 LEVEL | • Push [F-7 (SET)] to set the HF S9+60 meter indication and selects the next adjustment item.<br>**NEVER** change the SSG output level until 2 short beeps are sound. |
| 50 MHz S-METER | 1 | • Set an SSG as;<br>Frequency : 51.1515 MHz<br>Level : OFF | 50M S0 LEVEL | • Push [F-7 (SET)] to set the 50 MHz S0 meter indication and selects the next adjustment item.<br>**NEVER** change the SSG output level until 2 short beeps are sound. |
| | 2 | • Set an SSG as;<br>Level : 50 µV* (–73 dBm) | 50M S9 LEVEL | • Push [F-7 (SET)] to set the 50MHz S9 meter indication and selects the next adjustment item.<br>**NEVER** change the SSG output level until 2 short beeps are sound. |
| | 3 | • Set an SSG as;<br>Level : 50 mV* (–13 dBm) | S9+60 LEVEL | • Push [F-7 (SET)] to set the 50 MHz S9+60 meter indication and selects the opening screen.<br>**NEVER** change the SSG output level until 2 short beeps are sound. |
| REFERENCE FREQUENCY | 1 | • Connect a frequency counter to the J490 (MAIN unit).<br>• Push [F2 (REF)] to enter the REF adjustment mode.<br>***NOTE:*** Adjustment the reference frequency at least 5 minutes has been past from the IC-7800's main power (on the rear panel) is turned ON. | REF OSC | Rotate [MAIN DIAL] to set the reference frequency to 10.0000000 MHz.<br>Push [F-7 (SET)] to set the frequency and return to the opening screen. |
| | | After adjustment exiting from the adjustment mode when the transceiver is power OFF. | | |

*This output level of a standard signal generator (SSG) is indicated as SSG's open circuit.

# SECTION 5 PARTS LIST

## [REPLACEMENT UNITS]

| ORDER NO. | UNIT NAME |
|---|---|
| 0325900101 | U 7800 BPF |
| 0325900102 | U 7800 RXPLL-A |
| 0325900103 | U 7800 RXPLL-B |
| 0325900104 | U 7800 FILTER |
| 0325900105 | U 7800 DIDSEL |
| 0325900106 | U 7800 DC-DC |
| 0325900107 | U 7800 OSC |
| 0325900108 | U 7800 PA |
| 0325900109 | U 7800 TUNER |
| 0325900110 | U 7800 FRONT |

## [FRONT UNIT]

| REF NO. | ORDER NO. | DESCRIPTION | M. | H/V LOCATION |
|---|---|---|---|---|
| W1 | 8900008940 | CBL OPC-886 (P=1, N=10, L=75) | | |
| W2 | 8900008940 | CBL OPC-886 (P=1, N=10, L=75) | | |
| W3 | 8900012870 | CBL OPC-1331 (N=40, L=70) | | |
| W4 | 8900008670 | CBL OPC-849 (N=30, L=70) | | |
| W5 | 8900008940 | CBL OPC-886 (P=1, N=10, L=75) | | |
| W6 | 8900008940 | CBL OPC-886 (P=1, N=10, L=75) | | |
| W7 | 8900012880 | CBL OPC-1336 (N=18, L=70) | | |
| W8 | 8900008940 | CBL OPC-886 (P=1, N=10, L=75) | | |
| W9 | 8900014870 | CBL OPC-1332A (P=0.5, N=40, L=100) | | |
| W10 | 8900014730 | CBL OPC-683A (P=1, N=10, L=110) | | |
| W11 | 8900008670 | CBL OPC-849 (N=30, L=70) | | |
| W12 | 8900008670 | CBL OPC-849 (N=30, L=70) | | |
| W13 | 8900008940 | CBL OPC-886 (P=1, N=10, L=75) | | |
| W14 | 8900008670 | CBL OPC-849 (N=30, L=70) | | |
| W15 | 8900008940 | CBL OPC-886 (P=1, N=10, L=75) | | |
| W51 | 9025900020 | | | |
| EP1 | 6910015291 | UBD LTA070B790F | | |
| EP11 | 6910011090 | SUT RMS20-250-201-P | | |
| EP12 | 6910011090 | SUT RMS20-250-201-P | | |
| EP13 | 0880001460 | UBD EX-2500 | | |
| EP101 | 6910015650 | E.OTH S-G2218-3 (MOUNT PLATE) | | |
| EP102 | 6910015650 | E.OTH S-G2218-3 (MOUNT PLATE) | | |

## [VR-A BOARD]

| REF NO. | ORDER NO. | DESCRIPTION | M. | H/V LOCATION |
|---|---|---|---|---|
| R1 | 7210002890 | VAR RK161221005J/RV-308 | | |
| R2 | 7210002890 | VAR RK161221005J/RV-308 | | |
| R3 | 7210002890 | VAR RK161221005J/RV-308 | | |
| R4 | 7210002890 | VAR RK161221005J/RV-308 | | |
| R11 | 7030003520 | S.RES ERJ3GEYJ 472 V (4.7 k) | B | 44.6/27 |
| R12 | 7030003520 | S.RES ERJ3GEYJ 472 V (4.7 k) | B | 44.6/25.7 |
| R13 | 7030003520 | S.RES ERJ3GEYJ 472 V (4.7 k) | B | 59.4/29.9 |
| R14 | 7030003520 | S.RES ERJ3GEYJ 472 V (4.7 k) | B | 44.6/24.4 |
| R15 | 7030003520 | S.RES ERJ3GEYJ 472 V (4.7 k) | B | 44.6/21.8 |
| R16 | 7030003520 | S.RES ERJ3GEYJ 472 V (4.7 k) | B | 44.6/23.1 |
| R17 | 7030003520 | S.RES ERJ3GEYJ 472 V (4.7 k) | B | 63.2/9.5 |
| R18 | 7030003520 | S.RES ERJ3GEYJ 472 V (4.7 k) | B | 44.6/20.5 |
| R21 | 7030003860 | S.RES ERJ3GE JPW V | B | 49.7/41.4 |
| R22 | 7030003860 | S.RES ERJ3GE JPW V | B | 52.3/42.4 |
| R23 | 7030003860 | S.RES ERJ3GE JPW V | B | 62.8/42.9 |
| R24 | 7030003860 | S.RES ERJ3GE JPW V | B | 56.4/31.1 |
| R25 | 7030003860 | S.RES ERJ3GE JPW V | B | 52.3/44.4 |
| R26 | 7030003860 | S.RES ERJ3GE JPW V | B | 27.7/10.6 |
| R27 | 7030003860 | S.RES ERJ3GE JPW V | | |
| R28 | 7030003860 | S.RES ERJ3GE JPW V | | |
| C11 | 4030006880 | S.CER C1608 JB 1H 472K-T | B | 49.7/36.4 |
| C12 | 4030006880 | S.CER C1608 JB 1H 472K-T | B | 65.4/36.9 |
| C13 | 4030006880 | S.CER C1608 JB 1H 472K-T | B | 52.3/37.4 |
| C14 | 4030006880 | S.CER C1608 JB 1H 472K-T | B | 62.8/37.9 |
| C15 | 4030006880 | S.CER C1608 JB 1H 472K-T | B | 49.7/38.4 |
| C16 | 4030006880 | S.CER C1608 JB 1H 472K-T | B | 65.4/38.9 |
| C17 | 4030006880 | S.CER C1608 JB 1H 472K-T | B | 52.3/39.4 |
| C18 | 4030006880 | S.CER C1608 JB 1H 472K-T | B | 62.8/39.9 |

## [VR-A BOARD]

| REF NO. | ORDER NO. | DESCRIPTION | M. | H/V LOCATION |
|---|---|---|---|---|
| J1 | 6510021720 | S.CNR 30FLT-SM1-TB | B | 57.6/41.1 |
| J2 | 6510018921 | S.CNR B8B-PH-SM4-TB (LF) (SN) | B | 20/4.5 |
| J3 | 6510019971 | S.CNR 52808-1071 | B | 9.5/33.1 |
| J4 | 6510019971 | S.CNR 52808-1071 | B | 9.5/17.9 |
| EP2 | 6910012350 | S.BEA MMZ1608Y 102BT | B | 13.6/29.6 |
| EP3 | 6910012350 | S.BEA MMZ1608Y 102BT | B | 16.5/30.6 |
| EP5 | 6910012350 | S.BEA MMZ1608Y 102BT | B | 16.5/32.6 |
| EP6 | 6910012350 | S.BEA MMZ1608Y 102BT | B | 13.7/34.7 |
| EP7 | 6910012350 | S.BEA MMZ1608Y 102BT | B | 13.7/36.6 |
| EP8 | 6910012350 | S.BEA MMZ1608Y 102BT | B | 16.5/35.7 |
| EP9 | 6910012350 | S.BEA MMZ1608Y 102BT | B | 13.7/33.4 |
| EP10 | 6910012350 | S.BEA MMZ1608Y 102BT | B | 13.6/23.7 |
| EP11 | 6910012350 | S.BEA MMZ1608Y 102BT | B | 13.6/22.4 |
| EP12 | 6910012350 | S.BEA MMZ1608Y 102BT | B | 5.3/21.5 |
| EP13 | 6910012350 | S.BEA MMZ1608Y 102BT | B | 13.6/20.4 |
| EP14 | 6910012350 | S.BEA MMZ1608Y 102BT | B | 5.3/19.3 |
| EP15 | 6910012350 | S.BEA MMZ1608Y 102BT | B | 13.6/18.4 |
| EP16 | 6910012350 | S.BEA MMZ1608Y 102BT | B | 16.1/17.4 |
| EP17 | 6910012350 | S.BEA MMZ1608Y 102BT | B | 13.6/16.4 |
| EP18 | 6910012350 | S.BEA MMZ1608Y 102BT | B | 16.1/15.5 |
| EP19 | 6910012350 | S.BEA MMZ1608Y 102BT | B | 13.6/14.6 |
| EP20 | 6910012350 | S.BEA MMZ1608Y 102BT | B | 12.5/13.2 |
| EP21 | 6910012350 | S.BEA MMZ1608Y 102BT | B | 13.6/25 |

## [VR-B BOARD]

| REF NO. | ORDER NO. | DESCRIPTION | M. | H/V LOCATION |
|---|---|---|---|---|
| R1 | 7210003160 | VAR RV-317 (RK0972210) | | |
| R2 | 7210003160 | VAR RV-317 (RK0972210) | | |
| R3 | 7030003520 | S.RES ERJ3GEYJ 472 V (4.7 k) | T | 28.6/2.7 |
| R4 | 7030003520 | S.RES ERJ3GEYJ 472 V (4.7 k) | T | 27.8/8.4 |
| R5 | 7030003520 | S.RES ERJ3GEYJ 472 V (4.7 k) | T | 10.5/2.7 |
| R6 | 7030003520 | S.RES ERJ3GEYJ 472 V (4.7 k) | T | 11.1/8.4 |
| C1 | 4030006880 | S.CER C1608 JB 1H 472K-T | T | 12.4/8.4 |
| C2 | 4030006880 | S.CER C1608 JB 1H 472K-T | T | 11.8/2.7 |
| C3 | 4030006880 | S.CER C1608 JB 1H 472K-T | T | 26.5/8.4 |
| C4 | 4030006880 | S.CER C1608 JB 1H 472K-T | T | 27.3/2.7 |
| J1 | 6510019971 | S.CNR 52808-1071 | T | 19.5/5 |

## [VR-C BOARD]

| REF NO. | ORDER NO. | DESCRIPTION | M. | H/V LOCATION |
|---|---|---|---|---|
| R1 | 7210003160 | VAR RV-317 (RK0972210) | | |
| R2 | 7210003160 | VAR RV-317 (RK0972210) | | |
| R3 | 7030003520 | S.RES ERJ3GEYJ 472 V (4.7 k) | T | 28.6/2.7 |
| R4 | 7030003520 | S.RES ERJ3GEYJ 472 V (4.7 k) | T | 27.8/8.4 |
| R5 | 7030003520 | S.RES ERJ3GEYJ 472 V (4.7 k) | T | 10.5/2.7 |
| R6 | 7030003520 | S.RES ERJ3GEYJ 472 V (4.7 k) | T | 11.1/8.4 |
| C1 | 4030006880 | S.CER C1608 JB 1H 472K-T | T | 12.4/8.4 |
| C2 | 4030006880 | S.CER C1608 JB 1H 472K-T | T | 11.8/2.7 |
| C3 | 4030006880 | S.CER C1608 JB 1H 472K-T | T | 26.5/8.4 |
| C4 | 4030006880 | S.CER C1608 JB 1H 472K-T | T | 27.3/2.7 |
| J1 | 6510019971 | S.CNR 52808-1071 | T | 19.5/5 |

M.=Mounted side (T: Mounted on the Top side, B: Mounted on the Bottom side)
S.=Surface mount

## [VR-D BOARD]

| REF NO. | ORDER NO. | DESCRIPTION | M. | H/V LOCATION |
|---|---|---|---|---|
| R1 | 7210001130 | VAR RK097111T005A (10KB) | | |
| R2 | 7210001130 | VAR RK097111T005A (10KB) | | |
| R3 | 7210001130 | VAR RK097111T005A (10KB) | | |
| R4 | 7210001130 | VAR RK097111T005A (10KB) | | |
| R5 | 7210001130 | VAR RK097111T005A (10KB) | | |
| R6 | 7210001130 | VAR RK097111T005A (10KB) | | |
| R7 | 7210001130 | VAR RK097111T005A (10KB) | | |
| R11 | 7030003520 | S.RES ERJ3GEYJ 472 V (4.7 k) | B | 11.3/3.6 |
| R12 | 7030003520 | S.RES ERJ3GEYJ 472 V (4.7 k) | B | 28.4/3.6 |
| R13 | 7030003520 | S.RES ERJ3GEYJ 472 V (4.7 k) | B | 45.2/3.6 |
| R14 | 7030003520 | S.RES ERJ3GEYJ 472 V (4.7 k) | B | 62.3/3.6 |
| R15 | 7030003520 | S.RES ERJ3GEYJ 472 V (4.7 k) | B | 79.2/3.6 |
| R16 | 7030003520 | S.RES ERJ3GEYJ 472 V (4.7 k) | B | 96.3/3.6 |
| R17 | 7030003520 | S.RES ERJ3GEYJ 472 V (4.7 k) | B | 100.5/6.5 |
| C11 | 4030006880 | S.CER C1608 JB 1H 472K-T | B | 11.3/2 |
| C12 | 4030006880 | S.CER C1608 JB 1H 472K-T | B | 28.4/2 |
| C13 | 4030006880 | S.CER C1608 JB 1H 472K-T | B | 45.2/2 |
| C14 | 4030006880 | S.CER C1608 JB 1H 472K-T | B | 62.3/2 |
| C15 | 4030006880 | S.CER C1608 JB 1H 472K-T | B | 79.2/2 |
| C16 | 4030006880 | S.CER C1608 JB 1H 472K-T | B | 96.3/2 |
| C17 | 4030006880 | S.CER C1608 JB 1H 472K-T | B | 100.5/4.9 |
| J1 | 6510019971 | S.CNR 52808-1071 | B | 43/16 |

## [SW-A BOARD]

| REF NO. | ORDER NO. | DESCRIPTION | M. | H/V LOCATION |
|---|---|---|---|---|
| DS14 | 5040002930 | S.LED SML-512MW T86 | T | 86.2/43 |
| DS15 | 5040002990 | S.LED SML-512UWT86 | T | 8.5/56.4 |
| DS16 | 5040002930 | S.LED SML-512MW T86 | T | 8.5/55.1 |
| DS17 | 5040002930 | S.LED SML-512MW T86 | T | 56.2/56.4 |
| S1 | 2260002740 | S.SW LS8J2M-T | T | 9.7/77.2 |
| S2 | 2260002740 | S.SW LS8J2M-T | T | 8.2/62.5 |
| S3 | 2260002740 | S.SW LS8J2M-T | T | 8.2/48.8 |
| S4 | 2260002740 | S.SW LS8J2M-T | T | 8.2/35.1 |
| S5 | 2260002740 | S.SW LS8J2M-T | T | 37.5/38.9 |
| S6 | 2260002740 | S.SW LS8J2M-T | T | 26/38.9 |
| S7 | 2260002740 | S.SW LS8J2M-T | T | 49/38.9 |
| S8 | 2260002740 | S.SW LS8J2M-T | T | 63/38.9 |
| S11 | 2260002740 | S.SW LS8J2M-T | T | 56/79 |
| S12 | 2260002740 | S.SW LS8J2M-T | T | 74.5/38.9 |
| S13 | 2260002740 | S.SW LS8J2M-T | T | 86/38.9 |
| S14 | 2260002740 | S.SW LS8J2M-T | T | 100.3/82.7 |
| S15 | 2260002740 | S.SW LS8J2M-T | T | 100.3/70.7 |
| S16 | 2260002740 | S.SW LS8J2M-T | T | 100.3/58.7 |
| S17 | 2260002740 | S.SW LS8J2M-T | T | 100.3/46.7 |
| S18 | 2260002740 | S.SW LS8J2M-T | T | 100.3/34.7 |
| S19 | 2260002740 | S.SW LS8J2M-T | T | 100.3/22.7 |
| S20 | 2260002740 | S.SW LS8J2M-T | T | 100.3/10.7 |
| S21 | 2260002740 | S.SW LS8J2M-T | T | 56/51 |

## [SW-A BOARD]

| REF NO. | ORDER NO. | DESCRIPTION | M. | H/V LOCATION |
|---|---|---|---|---|
| R2 | 7030003400 | S.RES ERJ3GEYJ 471 V (470) | B | 8.3/85.5 |
| R3 | 7030003420 | S.RES ERJ3GEYJ 681 V (680) | B | 8.3/53.1 |
| R4 | 7030003400 | S.RES ERJ3GEYJ 471 V (470) | B | 8.3/56.1 |
| R6 | 7030003400 | S.RES ERJ3GEYJ 471 V (470) | B | 26.8/42.4 |
| R7 | 7030003400 | S.RES ERJ3GEYJ 471 V (470) | B | 33/41.6 |
| R8 | 7030003400 | S.RES ERJ3GEYJ 471 V (470) | B | 51.6/40.4 |
| R9 | 7030003400 | S.RES ERJ3GEYJ 471 V (470) | B | 62.5/36 |
| R10 | 7030003400 | S.RES ERJ3GEYJ 471 V (470) | B | 75.6/36 |
| R11 | 7030003400 | S.RES ERJ3GEYJ 471 V (470) | B | 90/37.5 |
| R12 | 7030003400 | S.RES ERJ3GEYJ 471 V (470) | B | 57.8/82.8 |
| R13 | 7030003480 | S.RES ERJ3GEYJ 222 V (2.2 k) | B | 3.6/40.8 |
| R14 | 7030003520 | S.RES ERJ3GEYJ 472 V (4.7 k) | B | 48.4/80.4 |
| R15 | 7030003480 | S.RES ERJ3GEYJ 222 V (2.2 k) | B | 29.6/39.4 |
| R16 | 7030003520 | S.RES ERJ3GEYJ 472 V (4.7 k) | B | 41.1/39.4 |
| R17 | 7030003480 | S.RES ERJ3GEYJ 222 V (2.2 k) | B | 66.3/36 |
| R18 | 7030003520 | S.RES ERJ3GEYJ 472 V (4.7 k) | B | 79.5/38.1 |
| R19 | 7030003540 | S.RES ERJ3GEYJ 682 V (6.8 k) | B | 57.3/40.5 |
| R20 | 7030003540 | S.RES ERJ3GEYJ 682 V (6.8 k) | B | 29.6/40.7 |
| R21 | 7030003540 | S.RES ERJ3GEYJ 682 V (6.8 k) | B | 2.4/38.1 |
| R22 | 7030003480 | S.RES ERJ3GEYJ 222 V (2.2 k) | B | 100.2/66.5 |
| R23 | 7030003520 | S.RES ERJ3GEYJ 472 V (4.7 k) | B | 101.5/63.3 |
| R24 | 7030003580 | S.RES ERJ3GEYJ 153 V (15 k) | B | 98.6/41.5 |
| R25 | 7030003480 | S.RES ERJ3GEYJ 222 V (2.2 k) | B | 100.3/19.2 |
| R26 | 7030003520 | S.RES ERJ3GEYJ 472 V (4.7 k) | B | 100.3/7.2 |
| R27 | 7030003540 | S.RES ERJ3GEYJ 682 V (6.8 k) | B | 98.6/77.5 |
| R28 | 7030003540 | S.RES ERJ3GEYJ 682 V (6.8 k) | B | 96.2/35.2 |
| R29 | 7030003580 | S.RES ERJ3GEYJ 153 V (15 k) | B | 51.2/53.1 |
| R30 | 7030003400 | S.RES ERJ3GEYJ 471 V (470) | B | 47/58 |
| C1 | 4030011600 | S.CER C1608 JB 1E 104K-T | B | 99.2/63 |
| C2 | 4030011600 | S.CER C1608 JB 1E 104K-T | B | 88.8/59.1 |
| C3 | 4030011600 | S.CER C1608 JB 1E 104K-T | B | 99.4/60.4 |
| C4 | 4030011600 | S.CER C1608 JB 1E 104K-T | B | 90.1/59.1 |
| C5 | 4030011600 | S.CER C1608 JB 1E 104K-T | B | 98.9/59 |
| C6 | 4030011600 | S.CER C1608 JB 1E 104K-T | B | 53.3/77.2 |
| C7 | 4030011600 | S.CER C1608 JB 1E 104K-T | B | 84.8/80.1 |
| C8 | 4030011600 | S.CER C1608 JB 1E 104K-T | B | 83.5/65.3 |
| C9 | 4030011600 | S.CER C1608 JB 1E 104K-T | B | 88/52.2 |
| J1 | 6510019971 | S.CNR 52808-1071 | B | 46.7/72.7 |
| J2 | 6510019971 | S.CNR 52808-1071 | B | 83.7/72.7 |
| J3 | 6510022470 | S.CNR 40FLT-SM1-TB | B | 94.3/58.7 |
| DS5 | 5040002980 | S.LED SML-512DW-T86 | T | 8.5/87.6 |
| DS6 | 5040002930 | S.LED SML-512MW T86 | T | 8.5/86.3 |
| DS7 | 5040002930 | S.LED SML-512MW T86 | T | 8.5/41.4 |
| DS8 | 5040002930 | S.LED SML-512MW T86 | T | 26.2/43 |
| DS9 | 5040002930 | S.LED SML-512MW T86 | T | 37.7/43 |
| DS10 | 5040002930 | S.LED SML-512MW T86 | T | 49.2/43 |
| DS11 | 5040002930 | S.LED SML-512MW T86 | T | 63.2/43 |
| DS12 | 5040002930 | S.LED SML-512MW T86 | T | 56.2/84.4 |
| DS13 | 5040002930 | S.LED SML-512MW T86 | T | 74.7/43 |

## [SW-B BOARD]

| REF NO. | ORDER NO. | DESCRIPTION | M. | H/V LOCATION |
|---|---|---|---|---|
| J1 | 6510020531 | S.CNR 52808-1871 | B | 112/20.3 |
| S1 | 2260002740 | S.SW LS8J2M-T | T | 16.8/24.6 |
| S2 | 2260002740 | S.SW LS8J2M-T | T | 38.8/24.6 |
| S3 | 2260002740 | S.SW LS8J2M-T | T | 60.8/24.6 |
| S4 | 2260002740 | S.SW LS8J2M-T | T | 82.8/24.6 |
| S5 | 2260002740 | S.SW LS8J2M-T | T | 104.8/24.6 |
| S6 | 2260002740 | S.SW LS8J2M-T | T | 126.8/24.6 |
| S7 | 2260002740 | S.SW LS8J2M-T | T | 148.8/24.6 |
| S8 | 2260002740 | S.SW LS8J2M-T | T | 16.8/15.2 |
| S9 | 2260002740 | S.SW LS8J2M-T | T | 38.8/15.2 |
| S10 | 2260002740 | S.SW LS8J2M-T | T | 60.8/15.2 |
| S11 | 2260002740 | S.SW LS8J2M-T | T | 82.8/15.2 |
| S12 | 2260002740 | S.SW LS8J2M-T | T | 104.8/15.2 |
| S13 | 2260002740 | S.SW LS8J2M-T | T | 126.8/15.2 |
| S14 | 2260002740 | S.SW LS8J2M-T | T | 148.8/15.2 |
| S15 | 2260002740 | S.SW LS8J2M-T | T | 125.5/3.1 |
| S16 | 2260002740 | S.SW LS8J2M-T | T | 145.2/3.1 |
| S17 | 2260002740 | S.SW LS8J2M-T | T | 167.3/3.1 |

M.=Mounted side (T: Mounted on the Top side, B: Mounted on the Bottom side)
S.=Surface mount

## [SW-C BOARD]

| REF NO. | ORDER NO. | DESCRIPTION | M. | H/V LOCATION |
|---|---|---|---|---|
| R1 | 7030003480 | S.RES ERJ3GEYJ 222 V (2.2 k) | B | 32.7/126.7 |
| R2 | 7030003520 | S.RES ERJ3GEYJ 472 V (4.7 k) | B | 30.7/122.6 |
| R3 | 7030003580 | S.RES ERJ3GEYJ 153 V (15 k) | B | 30.7/118.1 |
| R4 | 7030003540 | S.RES ERJ3GEYJ 682 V (6.8 k) | B | 30.6/125.7 |
| R5 | 7030003480 | S.RES ERJ3GEYJ 222 V (2.2 k) | B | 30.6/100.1 |
| R6 | 7030003520 | S.RES ERJ3GEYJ 472 V (4.7 k) | B | 30.6/97.4 |
| R7 | 7030003580 | S.RES ERJ3GEYJ 153 V (15 k) | B | 31.9/94.7 |
| R8 | 7030003540 | S.RES ERJ3GEYJ 682 V (6.8 k) | B | 31.9/101.7 |
| R9 | 7030003480 | S.RES ERJ3GEYJ 222 V (2.2 k) | B | 34.8/71.3 |
| R10 | 7030003520 | S.RES ERJ3GEYJ 472 V (4.7 k) | B | 35.5/69.3 |
| R11 | 7030003580 | S.RES ERJ3GEYJ 153 V (15 k) | B | 35.5/66.6 |
| R12 | 7030003540 | S.RES ERJ3GEYJ 682 V (6.8 k) | B | 32.7/84.5 |
| R13 | 7030003480 | S.RES ERJ3GEYJ 222 V (2.2 k) | B | 43.1/46.9 |
| R14 | 7030003520 | S.RES ERJ3GEYJ 472 V (4.7 k) | B | 49.2/44.4 |
| R15 | 7030003540 | S.RES ERJ3GEYJ 682 V (6.8 k) | B | 43.1/50.6 |
| R51 | 7030003400 | S.RES ERJ3GEYJ 471 V (470) | B | 38.3/124.2 |
| R52 | 7030003400 | S.RES ERJ3GEYJ 471 V (470) | B | 41.2/124.2 |
| R53 | 7030003400 | S.RES ERJ3GEYJ 471 V (470) | B | 37.9/107.7 |
| R54 | 7030003400 | S.RES ERJ3GEYJ 471 V (470) | B | 46.6/102.1 |
| R55 | 7030003400 | S.RES ERJ3GEYJ 471 V (470) | B | 43.2/98.8 |
| R56 | 7030003400 | S.RES ERJ3GEYJ 471 V (470) | B | 46.6/99.4 |
| R57 | 7030003400 | S.RES ERJ3GEYJ 471 V (470) | B | 48.7/89.9 |
| R58 | 7030003400 | S.RES ERJ3GEYJ 471 V (470) | B | 48.7/93.3 |
| C1 | 4030011600 | S.CER C1608 JB 1E 104K-T | B | 28.9/94.5 |
| C2 | 4030011600 | S.CER C1608 JB 1E 104K-T | B | 41.2/82 |
| C3 | 4030011600 | S.CER C1608 JB 1E 104K-T | B | 32.1/71.3 |
| C4 | 4030011600 | S.CER C1608 JB 1E 104K-T | B | 43.5/82.4 |
| J1 | 6510021720 | S.CNR 30FLT-SM1-TB | B | 37.9/89 |
| J2 | 6510019971 | S.CNR 52808-1071 | B | 44.2/113.1 |
| DS51 | 5040002930 | S.LED SML-512MW T86 | T | 36.5/123.3 |
| DS52 | 5040002930 | S.LED SML-512MW T86 | T | 48/123.3 |
| DS53 | 5040002930 | S.LED SML-512MW T86 | T | 36.5/104.8 |
| DS54 | 5040002930 | S.LED SML-512MW T86 | T | 48/104.8 |
| DS55 | 5040002930 | S.LED SML-512MW T86 | T | 36.5/94.8 |
| DS56 | 5040002930 | S.LED SML-512MW T86 | T | 48/94.8 |
| DS57 | 5040002930 | S.LED SML-512MW T86 | T | 36.5/84.8 |
| DS58 | 5040002930 | S.LED SML-512MW T86 | T | 48/84.8 |
| S1 | 2260002740 | S.SW LS8J2M-T | T | 36.7/129.1 |
| S2 | 2260002740 | S.SW LS8J2M-T | T | 48.2/129.1 |
| S3 | 2260002740 | S.SW LS8J2M-T | T | 36.7/118.9 |
| S4 | 2260002740 | S.SW LS8J2M-T | T | 48.2/118.9 |
| S5 | 2260002740 | S.SW LS8J2M-T | T | 36.7/100.4 |
| S6 | 2260002740 | S.SW LS8J2M-T | T | 48.2/100.4 |
| S7 | 2260002740 | S.SW LS8J2M-T | T | 36.7/90.4 |
| S8 | 2260002740 | S.SW LS8J2M-T | T | 48.2/90.4 |
| S9 | 2260002740 | S.SW LS8J2M-T | T | 36.7/80.4 |
| S10 | 2260002740 | S.SW LS8J2M-T | T | 48.2/80.4 |
| S11 | 2260002740 | S.SW LS8J2M-T | T | 36.7/70 |
| S12 | 2260002740 | S.SW LS8J2M-T | T | 36.7/61.2 |
| S13 | 2260002740 | S.SW LS8J2M-T | T | 36.7/52.4 |
| S14 | 2260002740 | S.SW LS8J2M-T | T | 36.5/42.7 |
| S15 | 2260002740 | S.SW LS8J2M-T | T | 61.5/42.7 |
| S16 | 2260002740 | S.SW LS8J2M-T | T | 12.2/32.4 |
| S17 | 2260002740 | S.SW LS8J2M-T | T | 74.3/27.4 |
| S18 | 2260002740 | S.SW LS8J2M-T | T | 12.2/14.7 |
| S19 | 2260002740 | S.SW LS8J2M-T | T | 75.2/14.2 |
| S20 | 2260002740 | S.SW LS8J2M-T | T | 12.2/2.3 |
| S21 | 2260002740 | S.SW LS8J2M-T | T | 75.2/2.3 |
| S22 | 2260002740 | S.SW LS8J2M-T | T | 25.7/2.3 |

## [JACK BOARD]

| REF NO. | ORDER NO. | DESCRIPTION | M. | H/V LOCATION |
|---|---|---|---|---|
| L1 | 6200003950 | S.COL HF50ACC 322513-T | T | 33/7.8 |
| L2 | 6200003950 | S.COL HF50ACC 322513-T | T | 23.5/2.7 |
| L3 | 6200003950 | S.COL HF50ACC 322513-T | T | 16.2/2 |
| L4 | 6180000900 | COL LAL 03NA 101K | | |
| L5 | 6180000900 | COL LAL 03NA 101K | | |
| L6 | 6180000900 | COL LAL 03NA 101K | | |
| R1 | 7030006060 | S.RES ERJ12YJ100U (10) | T | 24.1/6.1 |
| R2 | 7030006060 | S.RES ERJ12YJ100U (10) | T | 16.8/5.4 |
| C1 | 4030006880 | S.CER C1608 JB 1H 472K-T | B | 26.4/2.1 |
| C2 | 4030006880 | S.CER C1608 JB 1H 472K-T | B | 26.4/4.8 |
| C3 | 4030006880 | S.CER C1608 JB 1H 472K-T | B | 20.7/6.9 |
| C101 | 4030006880 | S.CER C1608 JB 1H 472K-T | B | 15.3/6.9 |
| C102 | 4030006880 | S.CER C1608 JB 1H 472K-T | B | 11.6/2.1 |
| J1 | 6510019971 | S.CNR 52808-1071 | B | 19/3.2 |
| J2 | 6510023891 | CNR S-G4617#01F | | |
| J102 | 6510023900 | CNR LGR4619-7000 | | |
| EP101 | 6910012350 | S.BEA MMZ1608Y 102BT | B | 15.3/8.2 |
| EP102 | 6910012350 | S.BEA MMZ1608Y 102BT | B | 10.3/2.1 |

## [MIC BOARD]

| REF NO. | ORDER NO. | DESCRIPTION | M. | H/V LOCATION |
|---|---|---|---|---|
| L1 | 6200003261 | S.COL NLV32T-101J | B | 4.5/17.8 |
| L2 | 6200003261 | S.COL NLV32T-101J | B | 2.4/12.5 |
| L3 | 6200003261 | S.COL NLV32T-101J | B | 4.5/2 |
| L4 | 6200003950 | S.COL HF50ACC 322513-T | B | 15.2/15.1 |
| C1 | 4030006880 | S.CER C1608 JB 1H 472K-T | B | 8.6/16.1 |
| C2 | 4030006880 | S.CER C1608 JB 1H 472K-T | B | 2.8/5.5 |
| C3 | 4030006880 | S.CER C1608 JB 1H 472K-T | B | 14.2/12.3 |
| C4 | 4030007130 | S.CER C1608 CH 1H 101J-T | B | 10.1/11.2 |
| C5 | 4030006880 | S.CER C1608 JB 1H 472K-T | B | 1.5/5.5 |
| C6 | 4030006880 | S.CER C1608 JB 1H 472K-T | B | 9.6/.9 |
| C7 | 4030006880 | S.CER C1608 JB 1H 472K-T | B | 7.7/10.1 |
| C8 | 4030007090 | S.CER C1608 CH 1H 470J-T | B | 9.4/13.9 |
| J1 | 6510000190 | CNR FM214-8SS (P) | | |
| J2 | 6510019971 | S.CNR 52808-1071 | B | 12.7/20.2 |
| EP2 | 6910012350 | S.BEA MMZ1608Y 102BT | B | 4.1/6.3 |
| EP3 | 6910012350 | S.BEA MMZ1608Y 102BT | B | 7.6/2 |
| EP4 | 6910012350 | S.BEA MMZ1608Y 102BT | B | 10.4/16 |
| EP5 | 6910012350 | S.BEA MMZ1608Y 102BT | B | 2.7/8.1 |
| EP6 | 6910012350 | S.BEA MMZ1608Y 102BT | B | 7.7/7.7 |
| EP7 | 6910015130 | S.BEA MMZ1608D 301BT | B | 17.2/10.8 |
| EP8 | 6910015130 | S.BEA MMZ1608D 301BT | B | 15.9/10.8 |
| EP9 | 6910015130 | S.BEA MMZ1608D 301BT | B | 10.2/6.9 |
| EP10 | 6910015130 | S.BEA MMZ1608D 301BT | B | 11.5/9.1 |
| EP11 | 6910012350 | S.BEA MMZ1608Y 102BT | B | 5.4/14.1 |

M.=Mounted side (T: Mounted on the Top side, B: Mounted on the Bottom side)
S.=Surface mount

## [TENKEY BOARD]

| REF NO. | ORDER NO. | DESCRIPTION | M. | H/V LOCATION |
|---|---|---|---|---|
| IC1 | 1130011510 | S.IC BU2099FV-E2 | B | 37.5/67.3 |
| IC2 | 1130011510 | S.IC BU2099FV-E2 | B | 33.5/31.8 |
| R1 | 7030003480 | S.RES ERJ3GEYJ 222 V (2.2 k) | B | 16.3/75.9 |
| R2 | 7030003520 | S.RES ERJ3GEYJ 472 V (4.7 k) | B | 16.6/67.7 |
| R3 | 7030003580 | S.RES ERJ3GEYJ 153 V (15 k) | B | 13.8/47.4 |
| R4 | 7030003540 | S.RES ERJ3GEYJ 682 V (6.8 k) | B | 16.3/79.3 |
| R5 | 7030003480 | S.RES ERJ3GEYJ 222 V (2.2 k) | B | 31.5/67.4 |
| R6 | 7030003520 | S.RES ERJ3GEYJ 472 V (4.7 k) | B | 30.7/65.6 |
| R7 | 7030003580 | S.RES ERJ3GEYJ 153 V (15 k) | B | 32.3/49.9 |
| R8 | 7030003540 | S.RES ERJ3GEYJ 682 V (6.8 k) | B | 30.3/78.3 |
| R9 | 7030003480 | S.RES ERJ3GEYJ 222 V (2.2 k) | B | 49.8/70.1 |
| R10 | 7030003520 | S.RES ERJ3GEYJ 472 V (4.7 k) | B | 49.8/62.2 |
| R11 | 7030003580 | S.RES ERJ3GEYJ 153 V (15 k) | B | 47.6/52.6 |
| R12 | 7030003540 | S.RES ERJ3GEYJ 682 V (6.8 k) | B | 49.8/78.4 |
| R51 | 7030003390 | S.RES ERJ3GEYJ 391 V (390) | B | 8/78 |
| R52 | 7030003390 | S.RES ERJ3GEYJ 391 V (390) | B | 8/75.3 |
| R53 | 7030003390 | S.RES ERJ3GEYJ 391 V (390) | B | 8/70.9 |
| R54 | 7030003390 | S.RES ERJ3GEYJ 391 V (390) | B | 8/72.9 |
| R55 | 7030003390 | S.RES ERJ3GEYJ 391 V (390) | B | 10.7/58.2 |
| R56 | 7030003390 | S.RES ERJ3GEYJ 391 V (390) | B | 12/58.2 |
| R57 | 7030003390 | S.RES ERJ3GEYJ 391 V (390) | B | 8/49.5 |
| R58 | 7030003390 | S.RES ERJ3GEYJ 391 V (390) | B | 8/46.8 |
| R59 | 7030003390 | S.RES ERJ3GEYJ 391 V (390) | B | 19.1/78 |
| R60 | 7030003390 | S.RES ERJ3GEYJ 391 V (390) | B | 19.1/75.3 |
| R61 | 7030003390 | S.RES ERJ3GEYJ 391 V (390) | B | 25.5/64.5 |
| R62 | 7030003390 | S.RES ERJ3GEYJ 391 V (390) | B | 25.5/65.8 |
| R63 | 7030003390 | S.RES ERJ3GEYJ 391 V (390) | B | 25.5/51.7 |
| R64 | 7030003390 | S.RES ERJ3GEYJ 391 V (390) | B | 25.5/53 |
| R65 | 7030003390 | S.RES ERJ3GEYJ 391 V (390) | B | 25.5/49.5 |
| R66 | 7030003390 | S.RES ERJ3GEYJ 391 V (390) | B | 25.5/47 |
| R67 | 7030003390 | S.RES ERJ3GEYJ 391 V (390) | B | 43/78 |
| R68 | 7030003390 | S.RES ERJ3GEYJ 391 V (390) | B | 43/75.3 |
| R69 | 7030003390 | S.RES ERJ3GEYJ 391 V (390) | B | 43.8/68.5 |
| R70 | 7030003390 | S.RES ERJ3GEYJ 391 V (390) | B | 43.8/67.2 |
| R71 | 7030003390 | S.RES ERJ3GEYJ 391 V (390) | B | 43/59 |
| R72 | 7030003390 | S.RES ERJ3GEYJ 391 V (390) | B | 43/56.3 |
| R73 | 7030003390 | S.RES ERJ3GEYJ 391 V (390) | B | 44.4/51.3 |
| R74 | 7030003390 | S.RES ERJ3GEYJ 391 V (390) | B | 44.4/52.6 |
| R75 | 7030003460 | S.RES ERJ3GEYJ 152 V (1.5 k) | B | 29.7/21 |
| R76 | 7030003460 | S.RES ERJ3GEYJ 152 V (1.5 k) | B | 44.3/18.1 |
| C1 | 4030011600 | S.CER C1608 JB 1E 104K-T | B | 8.5/66.9 |
| C2 | 4030011600 | S.CER C1608 JB 1E 104K-T | B | 5.4/69.3 |
| C3 | 4030011600 | S.CER C1608 JB 1E 104K-T | B | 11/67.4 |
| C4 | 4030011600 | S.CER C1608 JB 1E 104K-T | B | 35.9/71.5 |
| C5 | 4030011600 | S.CER C1608 JB 1E 104K-T | B | 31.7/35.9 |
| J1 | 6510021720 | S.CNR 30FLT-SM1-TB | B | 5.2/60 |
| J2 | 6510021720 | S.CNR 30FLT-SM1-TB | B | 5.2/31.6 |
| J3 | 6510021720 | S.CNR 30FLT-SM1-TB | B | 49.9/33 |
| J4 | 6510019971 | S.CNR 52808-1071 | B | 53.9/57 |
| J5 | 6510019971 | S.CNR 52808-1071 | B | 24.5/74.7 |
| J6 | 6510003400 | CNR B04B-EH-S | | |
| J7 | 6510018971 | S.CNR B4B-PH-SM4-TB (LF) (SN) | B | 36.5/3 |
| DS1 | 5040002980 | S.LED SML-512DW-T86 | T | 29.5/19 |
| DS2 | 5040002980 | S.LED SML-512DW-T86 | T | 45.5/19 |
| S1 | 2260002740 | S.SW LS8J2M-T | T | 9.5/34 |
| S2 | 2260002740 | S.SW LS8J2M-T | T | 9.5/26 |
| S3 | 2260002740 | S.SW LS8J2M-T | T | 29.5/34 |
| S4 | 2260002740 | S.SW LS8J2M-T | T | 29.5/26 |
| S5 | 2260002740 | S.SW LS8J2M-T | T | 45.5/34 |
| S6 | 2260002740 | S.SW LS8J2M-T | T | 45.5/26 |
| S7 | 2260002740 | S.SW LS8J2M-T | T | 9.5/12.7 |
| S8 | 2260002740 | S.SW LS8J2M-T | T | 29.5/16 |
| S9 | 2260002740 | S.SW LS8J2M-T | T | 29.5/7.5 |
| S11 | 2260002820 | S.SW LS9J2M-2D/D-T | T | 10.5/76.2 |
| S12 | 2260002820 | S.SW LS9J2M-2D/D-T | T | 10.5/66.7 |
| S13 | 2260002820 | S.SW LS9J2M-2D/D-T | T | 10.5/57.2 |
| S14 | 2260002820 | S.SW LS9J2M-2D/D-T | T | 10.5/47.7 |
| S15 | 2260002820 | S.SW LS9J2M-2D/D-T | T | 28/76.2 |
| S16 | 2260002820 | S.SW LS9J2M-2D/D-T | T | 28/66.7 |
| S17 | 2260002820 | S.SW LS9J2M-2D/D-T | T | 28/57.2 |
| S18 | 2260002820 | S.SW LS9J2M-2D/D-T | T | 28/47.7 |
| S19 | 2260002820 | S.SW LS9J2M-2D/D-T | T | 45.5/76.2 |
| S20 | 2260002820 | S.SW LS9J2M-2D/D-T | T | 45.5/66.7 |
| S21 | 2260002820 | S.SW LS9J2M-2D/D-T | T | 45.5/57.2 |
| S22 | 2260002820 | S.SW LS9J2M-2D/D-T | T | 45.5/47.7 |
| S23 | 2260002740 | S.SW LS8J2M-T | T | 45.5/16 |
| S24 | 2260002740 | S.SW LS8J2M-T | T | 45.5/7.5 |

## [PBT1 BOARD]

| REF NO. | ORDER NO. | DESCRIPTION | M. | H/V LOCATION |
|---|---|---|---|---|
| R1 | 7210003180 | VAR RV-319 (RK0972210) | | |
| R2 | 7030003520 | S.RES ERJ3GEYJ 472 V (4.7 k) | T | 13.5/6.5 |
| R3 | 7030003520 | S.RES ERJ3GEYJ 472 V (4.7 k) | T | 13.5/10 |
| C1 | 4030006880 | S.CER C1608 JB 1H 472K-T | T | 15.6/10 |
| C2 | 4030006880 | S.CER C1608 JB 1H 472K-T | T | 15.6/6.5 |
| J1 | 6510019971 | S.CNR 52808-1071 | T | 24.5/7 |
| S1 | 2250000410 | ECR TP90D96E20-30F-2178-1 | | |

## [PBT2 BOARD]

| REF NO. | ORDER NO. | DESCRIPTION | M. | H/V LOCATION |
|---|---|---|---|---|
| R1 | 7210003180 | VAR RV-319 (RK0972210) | | |
| R2 | 7210003170 | VAR RV-318 (RK09L1120CON) | | |
| R3 | 7030003520 | S.RES ERJ3GEYJ 472 V (4.7 k) | T | 47.4/8.5 |
| R4 | 7030003520 | S.RES ERJ3GEYJ 472 V (4.7 k) | T | 47.4/9.8 |
| R5 | 7030003520 | S.RES ERJ3GEYJ 472 V (4.7 k) | T | 16.2/12.3 |
| C1 | 4030006880 | S.CER C1608 JB 1H 472K-T | T | 52.5/10.2 |
| C2 | 4030006880 | S.CER C1608 JB 1H 472K-T | T | 50.6/10.2 |
| C3 | 4030006880 | S.CER C1608 JB 1H 472K-T | T | 16.2/11 |
| J1 | 6510019971 | S.CNR 52808-1071 | T | 59.1/5.1 |
| S1 | 2250000410 | ECR TP90D96E20-30F-2178-1 | | |

## [LED BOARD]

| REF NO. | ORDER NO. | DESCRIPTION | M. | H/V LOCATION |
|---|---|---|---|---|
| R1 | 7030003470 | S.RES ERJ3GEYJ 182 V (1.8 k) | T | 9.1/14.9 |
| R2 | 7030003420 | S.RES ERJ3GEYJ 681 V (680) | T | 21/14.9 |
| R3 | 7030003440 | S.RES ERJ3GEYJ 102 V (1 k) | T | 32.1/14.9 |
| R4 | 7030003400 | S.RES ERJ3GEYJ 471 V (470) | T | 80.2/14.9 |
| R5 | 7030003470 | S.RES ERJ3GEYJ 182 V (1.8 k) | T | 126/14.9 |
| R6 | 7030003420 | S.RES ERJ3GEYJ 681 V (680) | T | 139/14.9 |
| R7 | 7030003440 | S.RES ERJ3GEYJ 102 V (1 k) | T | 149.8/14.9 |
| J1 | 6510020711 | S.CNR 52793-1070 (1090) | T | 111.3/2.6 |
| DS1 | 5040003000 | S.LED SML-A12UT-T86 | T | 5.6/15.9 |
| DS2 | 5040002960 | S.LED SML-A12MT T86 | T | 17.6/15.9 |
| DS3 | 5040003010 | S.LED SML-A12WT | T | 29.6/15.9 |
| DS4 | 5040002970 | S.LED CL-270WB-D-TS | T | 76.6/15.9 |
| DS5 | 5040003000 | S.LED SML-A12UT-T86 | T | 123.6/15.9 |
| DS6 | 5040002960 | S.LED SML-A12MT T86 | T | 135.6/15.9 |
| DS7 | 5040003010 | S.LED SML-A12WT | T | 147.6/15.9 |

M.=Mounted side (T: Mounted on the Top side, B: Mounted on the Bottom side)
S.=Surface mount

## [CF BOARD]

| REF NO. | ORDER NO. | DESCRIPTION | M. | H/V LOCATION |
|---|---|---|---|---|
| R1 | 7030003470 | S.RES ERJ3GEYJ 182 V (1.8 k) | T | 8.8/8.7 |
| J1 | 6510024150 | S.CNR 50FY-BMT-TB | T | 34.5/4.4 |
| J2 | 6510024120 | S.CNR 31-5620-050-716-871 | T | 34.5/13.6 |
| J3 | 6510021601 | S.CNR S2B-PH-SM4-TB (LF) (SN) | T | 13.7/3.7 |
| DS1 | 5040002990 | S.LED SML-512UWT86 | T | 61.2/40.5 |
| EP2 | 6910015640 | E.OTH 30-5610-000-002-000 | | |

## [DISPLAY BOARD]

| REF NO. | ORDER NO. | DESCRIPTION | M. | H/V LOCATION |
|---|---|---|---|---|
| IC1 | 1130009640 | S.IC BU4051BCFV-E2 | T | 121.9/76.4 |
| IC2 | 1130009640 | S.IC BU4051BCFV-E2 | T | 110.5/10.9 |
| IC3 | 1130009640 | S.IC BU4051BCFV-E2 | T | 76.7/20 |
| IC4 | 1130009640 | S.IC BU4051BCFV-E2 | T | 24/61.2 |
| IC5 | 1130009640 | S.IC BU4051BCFV-E2 | T | 106.8/77.4 |
| IC6 | 1140011820 | S.IC M30620FCMGP D5 | T | 48.1/27.7 |
| IC7 | 1130011510 | S.IC BU2099FV-E2 | T | 124/59.8 |
| IC201 | 1130009301 | S.IC TC7SET08FU (T5L,JF) | T | 71.1/51.8 |
| IC202 | 1130009301 | S.IC TC7SET08FU (T5L,JF) | T | 107.2/58.5 |
| IC601 | 1130011551 | S.IC RX-4581NB-F | T | 39/45.9 |
| IC651 | 1110005821 | S.IC R3112N281A-TR-F | T | 47.9/91.1 |
| Q200 | 1590000430 | S.TR DTC144EUA T106 | T | 40.8/89.7 |
| Q201 | 1530003301 | S.TR 2SC3647S-TD-E | T | 91.1/47.1 |
| Q202 | 1530003301 | S.TR 2SC3647S-TD-E | T | 91.1/26.5 |
| Q203 | 1530002060 | S.TR 2SC4081 T106 R | T | 73.9/61.5 |
| Q204 | 1520000651 | S.TR 2SB1201S-TL-E | T | 79.5/65.1 |
| Q205 | 1590000680 | S.TR DTC114EUA T106 | T | 70.8/57.1 |
| Q206 | 1590000680 | S.TR DTC114EUA T106 | T | 113/19.4 |
| Q208 | 1590001330 | S.TR DTA114EUA T106 | T | 120/68.5 |
| Q209 | 1520000651 | S.TR 2SB1201S-TL-E | T | 113.9/59.9 |
| Q210 | 1530002060 | S.TR 2SC4081 T106 R | T | 107.3/55.3 |
| Q211 | 1590001330 | S.TR DTA114EUA T106 | T | 122.5/65.4 |
| Q212 | 1590000680 | S.TR DTC114EUA T106 | T | 72.5/54.3 |
| Q501 | 1590000680 | S.TR DTC114EUA T106 | T | 86/88.8 |
| Q502 | 1590000680 | S.TR DTC114EUA T106 | T | 86/92.5 |
| Q503 | 1590000680 | S.TR DTC114EUA T106 | T | 82.8/90.8 |
| Q504 | 1590001330 | S.TR DTA114EUA T106 | T | 89.2/88.8 |
| Q505 | 1590000680 | S.TR DTC114EUA T106 | T | 125/66.6 |
| Q601 | 1510000501 | S.TR 2SA1162-GR (TE85R,F) | T | 41.4/85.2 |
| D7 | 1750000520 | S.DIO DAN222TL | T | 122.4/18.7 |
| D8 | 1160000140 | S.DIO DAP222 TL | T | 122.4/15.3 |
| D9 | 1730002340 | S.ZEN MA8047-M (TX) | T | 74.3/59.3 |
| D10 | 1730002590 | S.ZEN MA8033-H (TX) | T | 109.5/56.9 |
| D11 | 1790001670 | S.DIO RB706F-40T106 | T | 121.3/10.6 |
| D12 | 1790001670 | S.DIO RB706F-40T106 | T | 60/31 |
| D601 | 1790001250 | S.DIO MA2S111-(TX) | T | 42.2/82.8 |
| D602 | 1790001250 | S.DIO MA2S111-(TX) | T | 39/85.9 |
| D603 | 1790001250 | S.DIO MA2S111-(TX) | T | 39/83.4 |
| X1 | 6050009870 | S.XTL CR-567 (9.8304 MHz) | T | 49.7/44.5 |
| L201 | 6200001831 | S.COL NLV32T-100J | T | 112/85.8 |
| L203 | 6200003950 | S.COL HF50ACC 322513-T | T | 115.2/85.6 |
| L204 | 6200001831 | S.COL NLV32T-100J | T | 126.9/91.6 |
| L205 | 6200003950 | S.COL HF50ACC 322513-T | T | 61.2/36.6 |
| L207 | 6200003950 | S.COL HF50ACC 322513-T | T | 117.4/17.1 |
| L208 | 6200003950 | S.COL HF50ACC 322513-T | T | 118.4/85.6 |
| L209 | 6200003950 | S.COL HF50ACC 322513-T | T | 9.9/64 |
| L210 | 6190001191 | S.COL D10F-#A814AY-101K | T | 86.6/79.7 |
| L211 | 6190001191 | S.COL D10F-#A814AY-101K | T | 81.2/38.2 |
| L601 | 6200001831 | S.COL NLV32T-100J | T | 34.7/83.8 |
| R200 | 7030003440 | S.RES ERJ3GEYJ 102 V (1 k) | T | 73.1/51.7 |
| R201 | 7030003470 | S.RES ERJ3GEYJ 182 V (1.8 k) | T | 96.6/43.6 |
| R202 | 7030003470 | S.RES ERJ3GEYJ 182 V (1.8 k) | T | 96.6/32.9 |
| R203 | 7030003800 | S.RES ERJ3GEYJ 105 V (1 M) | T | 49.7/41.2 |
| R208 | 7030003360 | S.RES ERJ3GEYJ 221 V (220) | T | 75/57 |
| R209 | 7030003860 | S.RES ERJ3GE JPW V | T | 14.6/25 |
| R210 | 7030003860 | S.RES ERJ3GE JPW V | T | 22/24.4 |
| R212 | 7030003660 | S.RES ERJ3GEYJ 683 V (68 k) | T | 67.8/57.6 |
| R213 | 7030003580 | S.RES ERJ3GEYJ 153 V (15 k) | T | 70.3/54.7 |
| R214 | 7030003440 | S.RES ERJ3GEYJ 102 V (1 k) | T | 40.7/13.4 |

## [DISPLAY BOARD]

| REF NO. | ORDER NO. | DESCRIPTION | M. | H/V LOCATION |
|---|---|---|---|---|
| R215 | 7030003440 | S.RES ERJ3GEYJ 102 V (1 k) | T | 39.4/13.4 |
| R216 | 7030003440 | S.RES ERJ3GEYJ 102 V (1 k) | T | 38.1/13.4 |
| R217 | 7030003440 | S.RES ERJ3GEYJ 102 V (1 k) | T | 36.8/13.4 |
| R218 | 7030003440 | S.RES ERJ3GEYJ 102 V (1 k) | T | 35.5/13.4 |
| R219 | 7030003440 | S.RES ERJ3GEYJ 102 V (1 k) | T | 34.2/13.4 |
| R220 | 7030003440 | S.RES ERJ3GEYJ 102 V (1 k) | T | 31.6/13.6 |
| R221 | 7030003440 | S.RES ERJ3GEYJ 102 V (1 k) | T | 32.9/13.4 |
| R222 | 7030003440 | S.RES ERJ3GEYJ 102 V (1 k) | T | 30.6/16.1 |
| R223 | 7030003440 | S.RES ERJ3GEYJ 102 V (1 k) | T | 29.8/13.5 |
| R224 | 7030003440 | S.RES ERJ3GEYJ 102 V (1 k) | T | 29.1/16.1 |
| R225 | 7030003440 | S.RES ERJ3GEYJ 102 V (1 k) | T | 28.3/13.4 |
| R226 | 7030003440 | S.RES ERJ3GEYJ 102 V (1 k) | T | 27.6/16.1 |
| R227 | 7030003440 | S.RES ERJ3GEYJ 102 V (1 k) | T | 26.8/13.4 |
| R228 | 7030003440 | S.RES ERJ3GEYJ 102 V (1 k) | T | 25.5/13.4 |
| R229 | 7030003440 | S.RES ERJ3GEYJ 102 V (1 k) | T | 22.9/13.4 |
| R230 | 7030003440 | S.RES ERJ3GEYJ 102 V (1 k) | T | 24.2/13.4 |
| R232 | 7030003440 | S.RES ERJ3GEYJ 102 V (1 k) | T | 74.1/13.4 |
| R233 | 7030003440 | S.RES ERJ3GEYJ 102 V (1 k) | T | 76.9/13.4 |
| R234 | 7030003440 | S.RES ERJ3GEYJ 102 V (1 k) | T | 75.4/13.4 |
| R235 | 7030003440 | S.RES ERJ3GEYJ 102 V (1 k) | T | 78.2/13.4 |
| R236 | 7030003440 | S.RES ERJ3GEYJ 102 V (1 k) | T | 79.5/13.4 |
| R237 | 7030003440 | S.RES ERJ3GEYJ 102 V (1 k) | T | 80.8/13.4 |
| R238 | 7030003440 | S.RES ERJ3GEYJ 102 V (1 k) | T | 82.1/13.4 |
| R239 | 7030003440 | S.RES ERJ3GEYJ 102 V (1 k) | T | 107.3/86.7 |
| R240 | 7030003440 | S.RES ERJ3GEYJ 102 V (1 k) | T | 105.9/86.7 |
| R241 | 7030003680 | S.RES ERJ3GEYJ 104 V (100 k) | T | 108.6/86.6 |
| R242 | 7030003680 | S.RES ERJ3GEYJ 104 V (100 k) | T | 104.5/86.7 |
| R246 | 7030003440 | S.RES ERJ3GEYJ 102 V (1 k) | T | 59.5/13.3 |
| R247 | 7030003440 | S.RES ERJ3GEYJ 102 V (1 k) | T | 58.2/13.3 |
| R248 | 7030003440 | S.RES ERJ3GEYJ 102 V (1 k) | T | 56.9/13.3 |
| R249 | 7030003440 | S.RES ERJ3GEYJ 102 V (1 k) | T | 55.6/13.3 |
| R250 | 7030003440 | S.RES ERJ3GEYJ 102 V (1 k) | T | 54.3/13.3 |
| R251 | 7030003320 | S.RES ERJ3GEYJ 101 V (100) | T | 52.8/13.3 |
| R252 | 7030003440 | S.RES ERJ3GEYJ 102 V (1 k) | T | 51.5/13.3 |
| R253 | 7030003440 | S.RES ERJ3GEYJ 102 V (1 k) | T | 50.2/13.3 |
| R254 | 7030003680 | S.RES ERJ3GEYJ 104 V (100 k) | T | 48.4/13.3 |
| R255 | 7030003640 | S.RES ERJ3GEYJ 473 V (47 k) | T | 12.6/14.1 |
| R256 | 7030003640 | S.RES ERJ3GEYJ 473 V (47 k) | T | 16.5/14.1 |
| R257 | 7030003670 | S.RES ERJ3GEYJ 823 V (82 k) | T | 13.9/14.1 |
| R258 | 7030003670 | S.RES ERJ3GEYJ 823 V (82 k) | T | 15.2/14.1 |
| R259 | 7030003440 | S.RES ERJ3GEYJ 102 V (1 k) | T | 12.8/90.1 |
| R260 | 7030003440 | S.RES ERJ3GEYJ 102 V (1 k) | T | 19.4/87.2 |
| R261 | 7030003440 | S.RES ERJ3GEYJ 102 V (1 k) | T | 10.1/88.5 |
| R262 | 7030003440 | S.RES ERJ3GEYJ 102 V (1 k) | T | 7.1/79.8 |
| R263 | 7030003440 | S.RES ERJ3GEYJ 102 V (1 k) | T | 18/81.9 |
| R264 | 7030003440 | S.RES ERJ3GEYJ 102 V (1 k) | T | 7.1/78.5 |
| R265 | 7030003440 | S.RES ERJ3GEYJ 102 V (1 k) | T | 18/80.6 |
| R266 | 7030003440 | S.RES ERJ3GEYJ 102 V (1 k) | T | 7.1/77.2 |
| R267 | 7030003440 | S.RES ERJ3GEYJ 102 V (1 k) | T | 18/79.3 |
| R268 | 7030003440 | S.RES ERJ3GEYJ 102 V (1 k) | T | 7.1/75.9 |
| R269 | 7030003440 | S.RES ERJ3GEYJ 102 V (1 k) | T | 18/78 |
| R270 | 7030003440 | S.RES ERJ3GEYJ 102 V (1 k) | T | 7.1/74.6 |
| R271 | 7030003440 | S.RES ERJ3GEYJ 102 V (1 k) | T | 18/76.7 |
| R272 | 7030003440 | S.RES ERJ3GEYJ 102 V (1 k) | T | 7.1/73.3 |
| R273 | 7030003440 | S.RES ERJ3GEYJ 102 V (1 k) | T | 7.1/72 |
| R274 | 7030003440 | S.RES ERJ3GEYJ 102 V (1 k) | T | 18/75.4 |
| R275 | 7030003440 | S.RES ERJ3GEYJ 102 V (1 k) | T | 7.1/70.7 |
| R276 | 7030003440 | S.RES ERJ3GEYJ 102 V (1 k) | T | 18/74.1 |
| R278 | 7030003440 | S.RES ERJ3GEYJ 102 V (1 k) | T | 13.4/42.7 |
| R279 | 7030003440 | S.RES ERJ3GEYJ 102 V (1 k) | T | 4/43.9 |
| R280 | 7030003440 | S.RES ERJ3GEYJ 102 V (1 k) | T | 13.4/44 |
| R281 | 7030003440 | S.RES ERJ3GEYJ 102 V (1 k) | T | 4/45.2 |
| R282 | 7030003440 | S.RES ERJ3GEYJ 102 V (1 k) | T | 13.4/45.3 |
| R283 | 7030003440 | S.RES ERJ3GEYJ 102 V (1 k) | T | 4/46.5 |
| R284 | 7030003520 | S.RES ERJ3GEYJ 472 V (4.7 k) | T | 13.4/46.6 |
| R285 | 7030003440 | S.RES ERJ3GEYJ 102 V (1 k) | T | 4/47.8 |
| R286 | 7030003440 | S.RES ERJ3GEYJ 102 V (1 k) | T | 13.4/47.9 |
| R287 | 7030003440 | S.RES ERJ3GEYJ 102 V (1 k) | T | 4/49.1 |
| R288 | 7030003440 | S.RES ERJ3GEYJ 102 V (1 k) | T | 13.4/49.2 |
| R289 | 7030003440 | S.RES ERJ3GEYJ 102 V (1 k) | T | 13.4/50.5 |
| R290 | 7030003440 | S.RES ERJ3GEYJ 102 V (1 k) | T | 4/51.7 |
| R291 | 7030003440 | S.RES ERJ3GEYJ 102 V (1 k) | T | 13.4/51.8 |
| R292 | 7030003440 | S.RES ERJ3GEYJ 102 V (1 k) | T | 4/53 |
| R293 | 7030003440 | S.RES ERJ3GEYJ 102 V (1 k) | T | 13.4/54.4 |
| R294 | 7030003440 | S.RES ERJ3GEYJ 102 V (1 k) | T | 4/55.6 |
| R295 | 7030003440 | S.RES ERJ3GEYJ 102 V (1 k) | T | 4/58.2 |
| R296 | 7030003440 | S.RES ERJ3GEYJ 102 V (1 k) | T | 13.4/58.3 |
| R297 | 7030003440 | S.RES ERJ3GEYJ 102 V (1 k) | T | 4/60.8 |
| R298 | 7030003440 | S.RES ERJ3GEYJ 102 V (1 k) | T | 13.4/59.6 |
| R299 | 7030003440 | S.RES ERJ3GEYJ 102 V (1 k) | T | 4/50.4 |
| R300 | 7030003440 | S.RES ERJ3GEYJ 102 V (1 k) | T | 4/63.4 |
| R301 | 7030003440 | S.RES ERJ3GEYJ 102 V (1 k) | T | 13.4/62.2 |
| R302 | 7030003560 | S.RES ERJ3GEYJ 103 V (10 k) | T | 13.4/60.9 |
| R303 | 7030003560 | S.RES ERJ3GEYJ 103 V (10 k) | T | 4/62.1 |
| R304 | 7030003560 | S.RES ERJ3GEYJ 103 V (10 k) | T | 13.4/57 |
| R305 | 7030003560 | S.RES ERJ3GEYJ 103 V (10 k) | T | 4/59.5 |
| R306 | 7030003560 | S.RES ERJ3GEYJ 103 V (10 k) | T | 4/56.9 |
| R307 | 7030003560 | S.RES ERJ3GEYJ 103 V (10 k) | T | 13.4/55.7 |
| R308 | 7030003560 | S.RES ERJ3GEYJ 103 V (10 k) | T | 4/54.3 |
| R309 | 7030003560 | S.RES ERJ3GEYJ 103 V (10 k) | T | 13.4/53.1 |
| R310 | 7030003440 | S.RES ERJ3GEYJ 102 V (1 k) | T | 24.2/32 |
| R311 | 7030003440 | S.RES ERJ3GEYJ 102 V (1 k) | T | 22.9/32 |

M.=Mounted side (T: Mounted on the Top side, B: Mounted on the Bottom side)
S.=Surface mount

## [DISPLAY BOARD]

| REF NO. | ORDER NO. | DESCRIPTION | M. | H/V LOCATION |
|---|---|---|---|---|
| R312 | 7030003440 | S.RES ERJ3GEYJ 102 V (1 k) | T | 104.9/9.4 |
| R313 | 7030003440 | S.RES ERJ3GEYJ 102 V (1 k) | T | 104.9/10.7 |
| R314 | 7030003440 | S.RES ERJ3GEYJ 102 V (1 k) | T | 104.1/12.2 |
| R315 | 7030003440 | S.RES ERJ3GEYJ 102 V (1 k) | T | 104.9/6.8 |
| R316 | 7030003440 | S.RES ERJ3GEYJ 102 V (1 k) | T | 116.1/13.7 |
| R317 | 7030003440 | S.RES ERJ3GEYJ 102 V (1 k) | T | 116.7/8.3 |
| R318 | 7030003440 | S.RES ERJ3GEYJ 102 V (1 k) | T | 116.1/11.7 |
| R319 | 7030003440 | S.RES ERJ3GEYJ 102 V (1 k) | T | 116.6/9.6 |
| R320 | 7030003440 | S.RES ERJ3GEYJ 102 V (1 k) | T | 135.2/23.4 |
| R321 | 7030003440 | S.RES ERJ3GEYJ 102 V (1 k) | T | 127.7/20.8 |
| R322 | 7030003440 | S.RES ERJ3GEYJ 102 V (1 k) | T | 126.4/20.8 |
| R323 | 7030003560 | S.RES ERJ3GEYJ 103 V (10 k) | T | 114.9/18.7 |
| R325 | 7030003380 | S.RES ERJ3GEYJ 331 V (330) | T | 106.9/69.6 |
| R326 | 7030003360 | S.RES ERJ3GEYJ 221 V (220) | T | 109.8/54.4 |
| R327 | 7030003580 | S.RES ERJ3GEYJ 153 V (15 k) | T | 105.4/55.1 |
| R328 | 7030003660 | S.RES ERJ3GEYJ 683 V (68 k) | T | 105.1/61.2 |
| R329 | 7030003560 | S.RES ERJ3GEYJ 103 V (10 k) | T | 38/33.3 |
| R330 | 7030003480 | S.RES ERJ3GEYJ 222 V (2.2 k) | T | 128.8/54.1 |
| R331 | 7030003640 | S.RES ERJ3GEYJ 473 V (47 k) | T | 18/84.5 |
| R332 | 7030003640 | S.RES ERJ3GEYJ 473 V (47 k) | T | 9.1/84.8 |
| R333 | 7030003640 | S.RES ERJ3GEYJ 473 V (47 k) | T | 18/83.2 |
| R334 | 7030003640 | S.RES ERJ3GEYJ 473 V (47 k) | T | 9.1/83.5 |
| R335 | 7030003670 | S.RES ERJ3GEYJ 823 V (82 k) | T | 21.4/84.5 |
| R336 | 7030003670 | S.RES ERJ3GEYJ 823 V (82 k) | T | 8.4/86.9 |
| R337 | 7030003670 | S.RES ERJ3GEYJ 823 V (82 k) | T | 20.7/83.2 |
| R338 | 7030003670 | S.RES ERJ3GEYJ 823 V (82 k) | T | 8.1/81.1 |
| R339 | 7070000261 | RES ERG2SJ 220 (22) | | |
| R340 | 7070000261 | RES ERG2SJ 220 (22) | | |
| R342 | 7030003640 | S.RES ERJ3GEYJ 473 V (47 k) | T | 35.4/38.4 |
| R343 | 7030003640 | S.RES ERJ3GEYJ 473 V (47 k) | T | 105.1/57.7 |
| R351 | 7030003440 | S.RES ERJ3GEYJ 102 V (1 k) | T | 123.2/70.3 |
| R352 | 7030003440 | S.RES ERJ3GEYJ 102 V (1 k) | T | 101.2/80.6 |
| R353 | 7030003440 | S.RES ERJ3GEYJ 102 V (1 k) | T | 102.3/75 |
| R354 | 7030003440 | S.RES ERJ3GEYJ 102 V (1 k) | T | 100.2/78 |
| R355 | 7030003440 | S.RES ERJ3GEYJ 102 V (1 k) | T | 101/75.2 |
| R356 | 7030003440 | S.RES ERJ3GEYJ 102 V (1 k) | T | 128.4/78.7 |
| R357 | 7030003440 | S.RES ERJ3GEYJ 102 V (1 k) | T | 126.7/72.1 |
| R358 | 7030003440 | S.RES ERJ3GEYJ 102 V (1 k) | T | 114.8/75.7 |
| R359 | 7030003440 | S.RES ERJ3GEYJ 102 V (1 k) | T | 116.1/75.4 |
| R360 | 7030003440 | S.RES ERJ3GEYJ 102 V (1 k) | T | 130.1/77.2 |
| R361 | 7030003440 | S.RES ERJ3GEYJ 102 V (1 k) | T | 129.4/74 |
| R362 | 7030003440 | S.RES ERJ3GEYJ 102 V (1 k) | T | 116.4/79.3 |
| R363 | 7030003440 | S.RES ERJ3GEYJ 102 V (1 k) | T | 117.4/75.5 |
| R364 | 7030003640 | S.RES ERJ3GEYJ 473 V (47 k) | T | 61.2/29 |
| R365 | 7030004730 | S.RES ERJ3GEYF 222 V (2.2 k) | T | 61.9/33 |
| R366 | 7030003440 | S.RES ERJ3GEYJ 102 V (1 k) | T | 128.4/64.2 |
| R369 | 7030003860 | S.RES ERJ3GE JPW V | T | 55.7/37.4 |
| R501 | 7030003640 | S.RES ERJ3GEYJ 473 V (47 k) | T | 68.5/16.9 |
| R502 | 7030003640 | S.RES ERJ3GEYJ 473 V (47 k) | T | 67.2/16.9 |
| R503 | 7030003640 | S.RES ERJ3GEYJ 473 V (47 k) | T | 36.1/32.5 |
| R504 | 7030003440 | S.RES ERJ3GEYJ 102 V (1 k) | T | 135.3/62.2 |
| R505 | 7030003360 | S.RES ERJ3GEYJ 221 V (220) | T | 89.2/86.9 |
| R601 | 7030003860 | S.RES ERJ3GE JPW V | T | 44.1/89.8 |
| R602 | 7030003520 | S.RES ERJ3GEYJ 472 V (4.7 k) | T | 41.6/87.6 |
| R603 | 7030003640 | S.RES ERJ3GEYJ 473 V (47 k) | T | 32.4/45.4 |
| R604 | 7030003560 | S.RES ERJ3GEYJ 103 V (10 k) | T | 32.4/46.9 |
| R651 | 7030003650 | S.RES ERJ3GEYJ 563 V (56 k) | T | 114.8/95 |
| R652 | 7030003620 | S.RES ERJ3GEYJ 333 V (33 k) | T | 118.6/95 |
| R653 | 7030003520 | S.RES ERJ3GEYJ 472 V (4.7 k) | T | 44.1/86.1 |
| | | | | |
| C8 | 4030011600 | S.CER C1608 JB 1E 104K-T | T | 134.5/74.9 |
| C201 | 4310001170 | MLR ECQE1A 124JBB | | |
| C202 | 4030016880 | S.CER C4520 CH 3F 150KT-A | T | 125.1/37.2 |
| C203 | 4030007020 | S.CER C1608 CH 1H 120J-T | T | 50.5/39.9 |
| C204 | 4030007020 | S.CER C1608 CH 1H 120J-T | T | 47.9/40 |
| C205 | 4030011600 | S.CER C1608 JB 1E 104K-T | T | 27.7/64.4 |
| C206 | 4030011600 | S.CER C1608 JB 1E 104K-T | T | 109/80.8 |
| C207 | 4030011600 | S.CER C1608 JB 1E 104K-T | T | 73.2/22.2 |
| C208 | 4030011600 | S.CER C1608 JB 1E 104K-T | T | 109.5/6.1 |
| C209 | 4030011600 | S.CER C1608 JB 1E 104K-T | T | 124.1/79.9 |
| C210 | 4030011600 | S.CER C1608 JB 1E 104K-T | T | 67.8/56.3 |
| C211 | 4030011600 | S.CER C1608 JB 1E 104K-T | T | 107.7/61.2 |
| C212 | 4510008800 | S.ELE EEE1EA100SR | T | 68.8/61.3 |
| C213 | 4510009150 | S.ELE EEE1EA470WP | T | 77.8/52 |
| C214 | 4510008800 | S.ELE EEE1EA100SR | T | 72.2/67.1 |
| C215 | 4030011600 | S.CER C1608 JB 1E 104K-T | T | 120.9/85.8 |
| C216 | 4030011600 | S.CER C1608 JB 1E 104K-T | T | 58.7/5.2 |
| C217 | 4030011600 | S.CER C1608 JB 1E 104K-T | T | 108.3/83.3 |
| C218 | 4510009150 | S.ELE EEE1EA470WP | T | 99.6/84.8 |
| C219 | 4030006860 | S.CER C1608 JB 1H 102K-T | T | 109.8/83.3 |
| C220 | 4030011600 | S.CER C1608 JB 1E 104K-T | T | 126.2/88.8 |
| C221 | 4030011600 | S.CER C1608 JB 1E 104K-T | T | 103.2/55.1 |
| C222 | 4030011600 | S.CER C1608 JB 1E 104K-T | T | 127.7/15.4 |
| C223 | 4030011600 | S.CER C1608 JB 1E 104K-T | T | 134.7/27.7 |
| C224 | 4030011600 | S.CER C1608 JB 1E 104K-T | T | 48.1/38.2 |
| C225 | 4030011600 | S.CER C1608 JB 1E 104K-T | T | 119.8/61.5 |
| C226 | 4030011600 | S.CER C1608 JB 1E 104K-T | T | 17.2/87.2 |
| C227 | 4030011600 | S.CER C1608 JB 1E 104K-T | T | 120.9/82.9 |
| C228 | 4510008800 | S.ELE EEE1EA100SR | T | 125.5/83.6 |
| C229 | 4030011600 | S.CER C1608 JB 1E 104K-T | T | 7.3/65.1 |
| C230 | 4030006880 | S.CER C1608 JB 1H 472K-T | T | 58.6/29 |

## [DISPLAY BOARD]

| REF NO. | ORDER NO. | DESCRIPTION | M. | H/V LOCATION |
|---|---|---|---|---|
| C231 | 4030011600 | S.CER C1608 JB 1E 104K-T | T | 47.6/17.4 |
| C232 | 4030011600 | S.CER C1608 JB 1E 104K-T | T | 58/31.2 |
| C241 | 4030011600 | S.CER C1608 JB 1E 104K-T | T | 118.9/80.3 |
| C242 | 4030011600 | S.CER C1608 JB 1E 104K-T | T | 116.4/81.2 |
| C243 | 4030011600 | S.CER C1608 JB 1E 104K-T | T | 120.2/80.3 |
| C244 | 4030011600 | S.CER C1608 JB 1E 104K-T | T | 121.1/73 |
| C245 | 4030011600 | S.CER C1608 JB 1E 104K-T | T | 128.4/80 |
| C246 | 4030011600 | S.CER C1608 JB 1E 104K-T | T | 131.3/74.6 |
| C247 | 4030011600 | S.CER C1608 JB 1E 104K-T | T | 130.1/75.9 |
| C248 | 4030011600 | S.CER C1608 JB 1E 104K-T | T | 124.8/73 |
| C249 | 4030011600 | S.CER C1608 JB 1E 104K-T | T | 112.1/6.1 |
| C250 | 4030011600 | S.CER C1608 JB 1E 104K-T | T | 113.5/14.3 |
| C251 | 4030011600 | S.CER C1608 JB 1E 104K-T | T | 112.1/7.4 |
| C252 | 4030011600 | S.CER C1608 JB 1E 104K-T | T | 115.9/6.9 |
| C253 | 4030011600 | S.CER C1608 JB 1E 104K-T | T | 104.1/13.5 |
| C254 | 4030011600 | S.CER C1608 JB 1E 104K-T | T | 109.5/7.4 |
| C255 | 4030011600 | S.CER C1608 JB 1E 104K-T | T | 104.9/8.1 |
| C256 | 4030011600 | S.CER C1608 JB 1E 104K-T | T | 104.9/5.5 |
| C257 | 4030011600 | S.CER C1608 JB 1E 104K-T | T | 72.8/13.4 |
| C258 | 4030011600 | S.CER C1608 JB 1E 104K-T | T | 72.7/16.2 |
| C259 | 4030011600 | S.CER C1608 JB 1E 104K-T | T | 80.2/19 |
| C260 | 4030011600 | S.CER C1608 JB 1E 104K-T | T | 72.4/19.4 |
| C261 | 4030011600 | S.CER C1608 JB 1E 104K-T | T | 76.4/28.1 |
| C262 | 4030011600 | S.CER C1608 JB 1E 104K-T | T | 75.1/28.1 |
| C263 | 4030011600 | S.CER C1608 JB 1E 104K-T | T | 73.3/27.3 |
| C264 | 4030011600 | S.CER C1608 JB 1E 104K-T | T | 72.5/25.5 |
| C265 | 4030011600 | S.CER C1608 JB 1E 104K-T | T | 20.9/52.3 |
| C266 | 4030011600 | S.CER C1608 JB 1E 104K-T | T | 28.4/62.5 |
| C267 | 4030011600 | S.CER C1608 JB 1E 104K-T | T | 21.6/55.8 |
| C268 | 4030011600 | S.CER C1608 JB 1E 104K-T | T | 21.6/57.1 |
| C601 | 4510008800 | S.ELE EEE1EA100SR | T | 29.4/86.2 |
| C602 | 4030011600 | S.CER C1608 JB 1E 104K-T | T | 39.2/41.8 |
| C651 | 4030008890 | S.CER C1608 JB 1H 273K-T | T | 47.9/93.5 |
| C652 | 4030011600 | S.CER C1608 JB 1E 104K-T | T | 50.3/91.9 |
| | | | | |
| J1 | 6510021720 | S.CNR 30FLT-SM1-TB | T | 13.2/80.7 |
| J2 | 6510021720 | S.CNR 30FLT-SM1-TB | T | 8.7/52.4 |
| J3 | 6510022470 | S.CNR 40FLT-SM1-TB | T | 131.5/62.7 |
| J4 | 6510020531 | S.CNR 52808-1871 | T | 30.8/8.8 |
| J5 | 6510019971 | S.CNR 52808-1071 | T | 77.7/8.8 |
| J6 | 6510021720 | S.CNR 30FLT-SM1-TB | T | 130.9/21.4 |
| J7 | 6510019971 | S.CNR 52808-1071 | T | 55.4/8.8 |
| J201 | 6510022470 | S.CNR 40FLT-SM1-TB | T | 6.2/28.7 |
| J202 | 6510022470 | S.CNR 40FLT-SM1-TB | T | 18.1/28.7 |
| J203 | 6510020081 | S.CNR 52808-2071 (2090) | T | 113.5/91.2 |
| J205 | 6510003400 | CNR B04B-EH-S | | |
| J301 | 6510021181 | S.CNR SM2(8.0)B-BHS1TB(LF) (SN) | T | 131.7/38.9 |
| J302 | 6510022191 | S.CNR B3B-PH-SM4-TB (LF) (SN) | T | 94.2/7.5 |
| J601 | 6510021861 | CNR BH-800.8 | | |
| | | | | |
| T201 | 5910000981 | TSM 3319-T088LF | | |
| | | | | |
| BT601 | 3020000110 | LTM CR2032 | | |

M.=Mounted side (T: Mounted on the Top side, B: Mounted on the Bottom side)
S.=Surface mount

## [RXPLL-A UNIT]

| REF NO. | ORDER NO. | DESCRIPTION | | M. | H/V LOCATION |
|---|---|---|---|---|---|
| IC1 | 1130011530 | S.IC | CD74HC4094M96 | T | 11.9/24.1 |
| IC2 | 1130009691 | S.IC | TC74HCT7007AF (F) | T | 22.8/23.3 |
| IC51 | 1180001251 | S.IC | TA7808F (TE16L,Q) | T | 77/16.7 |
| IC61 | 1180000421 | S.IC | TA78L05F (TE12R,F) | B | 56.5/16 |
| IC101 | 1140007881 | S.IC | TC190G08EFG0046JDZ | T | 31.3/89.7 |
| IC102 | 1130003831 | S.IC | TC7S04F (TE85R,F) | T | 33.1/74.7 |
| IC103 | 1130006441 | S.IC | TC7S08F (TE85R,F) | B | 34/92.1 |
| IC104 | 1130003831 | S.IC | TC7S04F (TE85R,F) | T | 31.7/101.1 |
| IC201 | 1130009230 | S.IC | LMX2306TMX/NOPB | T | 27.9/38.8 |
| IC501 | 1140007881 | S.IC | TC190G08EFG0046JDZ | T | 31.3/142.5 |
| IC502 | 1130003831 | S.IC | TC7S04F (TE85R,F) | T | 24.8/127.4 |
| IC503 | 1130003831 | S.IC | TC7S04F (TE85R,F) | T | 31.7/154.1 |
| IC602 | 1130006441 | S.IC | TC7S08F (TE85R,F) | B | 50.6/113.3 |
| IC651 | 1140004550 | S.IC | M65343FP/SC1287 | T | 22.6/169.2 |
| IC652 | 1130003831 | S.IC | TC7S04F (TE85R,F) | T | 13.7/163.1 |
| IC1051 | 1190002010 | S.IC | SD5400CY | T | 176.9/99.9 |
| IC1081 | 1110006180 | S.IC | UPG2009TB-E3 | B | 151.6/85.1 |
| IC1402 | 1190002110 | S.IC | NJG1519KC1-TE3 | T | 117.3/69.5 |
| IC1403 | 1190002110 | S.IC | NJG1519KC1-TE3 | T | 113.4/106.3 |
| IC1501 | 1110006121 | S.IC | DBM9A41-G-TR | T | 121.2/124.5 |
| IC1502 | 1110006121 | S.IC | DBM9A41-G-TR | T | 121.2/133 |
| IC1503 | 1110006100 | S.IC | NJM5534MD-TE1 | T | 138.4/151.7 |
| IC1504 | 1110006100 | S.IC | NJM5534MD-TE1 | T | 119.2/151.7 |
| IC1505 | 1110006190 | S.IC | NJM074M-TE1 | T | 128.8/166.9 |
| IC1506 | 1110006100 | S.IC | NJM5534MD-TE1 | T | 128.8/175.6 |
| IC1651 | 1130011920 | S.IC | TC74LCX00F (EL) | T | 110/126.2 |
| IC1652 | 1110005420 | S.IC | BA15532F-E2 | T | 139.8/175.6 |
| IC1653 | 1110005100 | S.IC | NJM072BM-TE1 | B | 140/172 |
| IC1701 | 1130011530 | S.IC | CD74HC4094M96 | T | 158/166.7 |
| IC1702 | 1130011530 | S.IC | CD74HC4094M96 | T | 148.9/166.7 |
| IC1703 | 1160000131 | S.IC | TD62783AFG (S.EL) | T | 157.3/154.8 |
| IC1704 | 1180000790 | S.IC | AN78L10M (E1) | B | 183.2/159.8 |
| | | | | | |
| Q1 | 1590001050 | S.TR | DTC114TUA T106 | B | 30.3/22.6 |
| Q30 | 1530002060 | S.TR | 2SC4081 T106 R | T | 22.3/110.9 |
| Q41 | 1590000680 | S.TR | DTC114EUA T106 | T | 12.8/34.2 |
| Q150 | 1560000331 | S.FET | 2SK210-GR (TE85R,F) | T | 26.9/53 |
| Q151 | 1530002280 | S.TR | 2SC4081 T106 S | B | 33.6/57.2 |
| Q152 | 1530002280 | S.TR | 2SC4081 T106 S | B | 30.8/78.2 |
| Q201 | 1590001330 | S.TR | DTA114EUA T106 | T | 29.6/34.1 |
| Q220 | 1560000331 | S.FET | 2SK210-GR (TE85R,F) | T | 72.5/33.9 |
| Q230 | 1560000331 | S.FET | 2SK210-GR (TE85R,F) | T | 72.5/46.4 |
| Q240 | 1560000331 | S.FET | 2SK210-GR (TE85R,F) | T | 72.5/58.9 |
| Q250 | 1560000331 | S.FET | 2SK210-GR (TE85R,F) | T | 72.5/71.4 |
| Q260 | 1560000331 | S.FET | 2SK210-GR (TE85R,F) | T | 72.5/83.9 |
| Q270 | 1560000331 | S.FET | 2SK210-GR (TE85R,F) | T | 72.5/95.8 |
| Q280 | 1590000680 | S.TR | DTC114EUA T106 | T | 82.3/34.4 |
| Q281 | 1590000680 | S.TR | DTC114EUA T106 | T | 82.3/46.9 |
| Q282 | 1590000680 | S.TR | DTC114EUA T106 | T | 82.3/59.4 |
| Q283 | 1590000680 | S.TR | DTC114EUA T106 | T | 82.3/71.9 |
| Q284 | 1590000680 | S.TR | DTC114EUA T106 | T | 82.3/84.4 |
| Q285 | 1590000680 | S.TR | DTC114EUA T106 | T | 82.3/96.4 |
| Q301 | 1530003431 | S.TR | 2SC5226-4-TL-E | T | 92.1/30.1 |
| Q302 | 1530003431 | S.TR | 2SC5226-4-TL-E | B | 89.1/42.5 |
| Q303 | 1530003431 | S.TR | 2SC5226-4-TL-E | B | 91.3/25.1 |
| Q341 | 1590000680 | S.TR | DTC114EUA T106 | T | 86.3/36.7 |
| Q351 | 1580000751 | S.FET | 3SK294 (TE85L,F) | T | 92.1/56.9 |
| Q352 | 1530003431 | S.TR | 2SC5226-4-TL-E | B | 89.2/64.5 |
| Q363 | 1590000680 | S.TR | DTC114EUA T106 | T | 86.8/54.3 |
| Q364 | 1590001330 | S.TR | DTA114EUA T106 | T | 86.8/57.4 |
| Q421 | 1590000680 | S.TR | DTC114EUA T106 | B | 96.2/91.6 |
| Q422 | 1590000680 | S.TR | DTC114EUA T106 | B | 92.6/91.6 |
| Q441 | 1590000680 | S.TR | DTC114EUA T106 | T | 86.5/73.7 |
| Q502 | 1590000680 | S.TR | DTC114EUA T106 | T | 41.9/128.8 |
| Q540 | 1530002060 | S.TR | 2SC4081 T106 R | B | 58.7/141.2 |
| Q541 | 1560000331 | S.FET | 2SK210-GR (TE85R,F) | T | 68.9/142.8 |
| Q561 | 1530003431 | S.TR | 2SC5226-4-TL-E | T | 70.6/153.8 |
| Q580 | 1530003431 | S.TR | 2SC5226-4-TL-E | T | 41.7/147.4 |
| Q591 | 1530003151 | S.TR | 2SC4673D-TD-E | T | 61.7/166.5 |
| Q592 | 1520000561 | S.TR | 2SB1123 T-TD-E | B | 52/165.3 |
| Q593 | 1590000680 | S.TR | DTC114EUA T106 | B | 54.8/171.2 |
| Q680 | 1530002060 | S.TR | 2SC4081 T106 R | T | 37.5/163.2 |
| Q702 | 1530002601 | S.TR | 2SC4215-O (TE85R,F) | T | 31.4/110.9 |
| Q801 | 1560000561 | S.FET | 2SK882-GR (TE85L,F) | T | 82.8/147.3 |
| Q811 | 1560000561 | S.FET | 2SK882-GR (TE85L,F) | T | 77.4/177.6 |
| Q831 | 1560000561 | S.FET | 2SK882-GR (TE85L,F) | T | 88.7/155.1 |
| Q832 | 1520000561 | S.TR | 2SB1123 T-TD-E | B | 77.9/167.1 |
| Q833 | 1590000680 | S.TR | DTC114EUA T106 | B | 73.5/162.5 |
| Q1001 | 1530003851 | S.TR | 2SC5551F-TD-E | B | 174/9 |
| Q1004 | 1590001960 | S.TR | XP4311 (TX) | T | 150/18.8 |
| Q1005 | 1590001960 | S.TR | XP4311 (TX) | T | 145.9/18.8 |
| Q1006 | 1530003851 | S.TR | 2SC5551F-TD-E | B | 150/37.6 |
| Q1007 | 1530003851 | S.TR | 2SC5551F-TD-E | B | 176.5/42.5 |
| Q1008 | 1530003851 | S.TR | 2SC5551F-TD-E | B | 160.5/42.5 |
| Q1101 | 1530003860 | TR | 2SC3950D | | |
| Q1102 | 1590000680 | S.TR | DTC114EUA T106 | T | 165.5/133.8 |
| Q1103 | 1520000561 | S.TR | 2SB1123 T-TD-E | B | 168.6/127.8 |
| Q1104 | 1530003860 | TR | 2SC3950D | | |
| Q1105 | 1530003841 | S.TR | 2SC5501-4-TR-E | T | 166.5/142.1 |
| Q1205 | 1590001960 | S.TR | XP4311 (TX) | T | 158.8/55.6 |
| Q1209 | 1530003851 | S.TR | 2SC5551F-TD-E | B | 121/34.9 |

## [RXPLL-A UNIT]

| REF NO. | ORDER NO. | DESCRIPTION | | M. | H/V LOCATION |
|---|---|---|---|---|---|
| Q1210 | 1530003851 | S.TR | 2SC5551F-TD-E | B | 111.5/34.9 |
| Q1211 | 1560001311 | S.FET | MMBFU310LT1G | T | 159.5/96.4 |
| Q1212 | 1560001311 | S.FET | MMBFU310LT1G | T | 153.5/96.4 |
| Q1213 | 1590000680 | S.TR | DTC114EUA T106 | B | 156.9/123.7 |
| Q1214 | 1520000561 | S.TR | 2SB1123 T-TD-E | B | 155.4/113.5 |
| Q1301 | 1530003151 | S.TR | 2SC4673D-TD-E | T | 157.8/120 |
| Q1352 | 1530003851 | S.TR | 2SC5551F-TD-E | B | 140/66.7 |
| Q1401 | 1530003841 | S.TR | 2SC5501-4-TR-E | T | 131.9/105.8 |
| Q1402 | 1530003021 | S.TR | 2SC4402-3-TL-E | T | 123.4/111.8 |
| Q1403 | 1530003021 | S.TR | 2SC4402-3-TL-E | T | 123.4/114.3 |
| Q1501 | 1530003450 | S.TR | 2SC4835-R (TX) | T | 133.5/143.5 |
| Q1502 | 1530003450 | S.TR | 2SC4835-R (TX) | T | 120.4/143.5 |
| Q1651 | 1530002601 | S.TR | 2SC4215-O (TE85R,F) | B | 105.6/140.3 |
| Q1701 | 1590001960 | S.TR | XP4311 (TX) | T | 106.6/43.9 |
| Q1702 | 1590001960 | S.TR | XP4311 (TX) | T | 148.9/147.2 |
| Q1703 | 1590001960 | S.TR | XP4311 (TX) | T | 146.4/147.2 |
| | | | | | |
| D101 | 1750000520 | S.DIO | DAN222TL | T | 41.8/86.2 |
| D152 | 1720000590 | S.VCP | MA357 (TX) | T | 17.6/59.9 |
| D153 | 1790000491 | S.DIO | HSM88ASTR-E | T | 27.2/60.4 |
| D154 | 1790000491 | S.DIO | HSM88ASTR-E | T | 27.2/63.8 |
| D201 | 1750000520 | S.DIO | DAN222TL | T | 32.4/34.1 |
| D220 | 1720000590 | S.VCP | MA357 (TX) | T | 50.8/31.8 |
| D221 | 1720000590 | S.VCP | MA357 (TX) | T | 52.9/31.8 |
| D222 | 1790000620 | S.DIO | MA77 (TX) | T | 82.6/29.8 |
| D230 | 1720000590 | S.VCP | MA357 (TX) | T | 50.8/44.2 |
| D231 | 1720000590 | S.VCP | MA357 (TX) | T | 52.9/44.2 |
| D232 | 1790000620 | S.DIO | MA77 (TX) | T | 82.6/42.3 |
| D240 | 1720000590 | S.VCP | MA357 (TX) | T | 50.8/56.7 |
| D241 | 1720000590 | S.VCP | MA357 (TX) | T | 52.9/56.7 |
| D242 | 1790000620 | S.DIO | MA77 (TX) | T | 82.6/54.8 |
| D250 | 1720000590 | S.VCP | MA357 (TX) | T | 50.8/69.2 |
| D252 | 1790000620 | S.DIO | MA77 (TX) | T | 82.6/67.3 |
| D261 | 1720000590 | S.VCP | MA357 (TX) | T | 52.9/81.7 |
| D262 | 1790000620 | S.DIO | MA77 (TX) | T | 82.6/79.8 |
| D270 | 1720000590 | S.VCP | MA357 (TX) | T | 50.8/94.2 |
| D271 | 1720000590 | S.VCP | MA357 (TX) | T | 52.4/96.7 |
| D272 | 1790000620 | S.DIO | MA77 (TX) | T | 82.5/92 |
| D341 | 1790000620 | S.DIO | MA77 (TX) | T | 90/37.2 |
| D342 | 1160000070 | S.DIO | DAN202K T146 | B | 81.1/47.7 |
| D362 | 1790000620 | S.DIO | MA77 (TX) | T | 88.3/65.5 |
| D363 | 1790000620 | S.DIO | MA77 (TX) | T | 88.3/62 |
| D421 | 1790000620 | S.DIO | MA77 (TX) | T | 91.9/85 |
| D422 | 1790000620 | S.DIO | MA77 (TX) | T | 88.6/85 |
| D423 | 1790000620 | S.DIO | MA77 (TX) | T | 92.5/91.2 |
| D424 | 1790000620 | S.DIO | MA77 (TX) | T | 88.9/91.2 |
| D441 | 1790000620 | S.DIO | MA77 (TX) | T | 89.6/74.4 |
| D501 | 1750000520 | S.DIO | DAN222TL | T | 42/132 |
| D542 | 1720000590 | S.VCP | MA357 (TX) | T | 62.5/139.6 |
| D821 | 1750000431 | S.DIO | HSB88WSTR-E | T | 84.1/169.4 |
| D1001 | 1750000581 | S.DIO | 1SV307 (TPH3,F) | T | 181.9/65.7 |
| D1101 | 1790000620 | S.DIO | MA77 (TX) | T | 177.6/146.6 |
| D1102 | 1790000620 | S.DIO | MA77 (TX) | T | 177.6/148.4 |
| D1201 | 1750000581 | S.DIO | 1SV307 (TPH3,F) | T | 139.1/57.7 |
| D1351 | 1750000581 | S.DIO | 1SV307 (TPH3,F) | T | 140.8/71.1 |
| D1653 | 1750000550 | S.DIO | 1SS355 TE-17 | T | 138.9/167.2 |
| D1654 | 1750000550 | S.DIO | 1SS355 TE-17 | T | 142.5/167.2 |
| D1701 | 1790001670 | S.DIO | RB706F-40T106 | T | 170.5/160.8 |
| | | | | | |
| FI101 | 2020001820 | S.CER | SFECV10M5FA00-R0 | T | 26/73.9 |
| FI831 | 2030000300 | S.MLH | FL-356 (64.491 MHz) | T | 91.6/162.1 |
| FI1401 | 2030000281 | S.MLH | FL-364A (64.455 MHz) | T | 116.3/88.5 |
| FI1402 | 2030000331 | S.MLH | FL-358A (64.455 MHz) | T | 107/88.5 |
| FI1403 | 2030000510 | S.MLH | FL-396 (64.455 MHz) | T | 126/85.5 |
| | | | | | |
| L1 | 6200003261 | S.COL | NLV32T-101J | T | 10.8/15.4 |
| L2 | 6200003261 | S.COL | NLV32T-101J | T | 29/19.9 |
| L10 | 6200003950 | S.COL | HF50ACC 322513-T | T | 38.6/14.7 |
| L11 | 6200003950 | S.COL | HF50ACC 322513-T | T | 13.8/15.4 |
| L12 | 6200003950 | S.COL | HF50ACC 322513-T | T | 16.8/15.4 |
| L13 | 6200003950 | S.COL | HF50ACC 322513-T | T | 29/15.4 |
| L20 | 6200003321 | S.COL | NLV32T-3R3J | T | 85.9/123.8 |
| L30 | 6200005491 | S.COL | NLV32T-331J | T | 20.6/120 |
| L101 | 6200001831 | S.COL | NLV32T-100J | T | 38.3/72.8 |
| L151 | 6130002970 | COL | LB-343 | | |
| L152 | 6200001831 | S.COL | NLV32T-100J | T | 30/54.5 |
| L201 | 6200005011 | S.COL | NLV25T-100J | T | 22.2/45 |
| L211 | 6200003661 | S.COL | NLV25T-R68J | B | 45.4/35.3 |
| L220 | 6200010790 | S.COL | C2520C-3R9G-A | T | 51.9/37.5 |
| L221 | 6190001421 | COL | #E526GN-110502 | | |
| L222 | 6200010790 | S.COL | C2520C-3R9G-A | T | 76.2/37.7 |
| L230 | 6200010830 | S.COL | C2520C-3R3G-A | T | 51.9/50 |
| L231 | 6190001421 | COL | #E526GN-110502 | | |
| L232 | 6200010830 | S.COL | C2520C-3R3G-A | T | 76.2/50.2 |
| L240 | 6200010830 | S.COL | C2520C-3R3G-A | T | 51.9/62.4 |
| L241 | 6190001421 | COL | #E526GN-110502 | | |
| L242 | 6200010830 | S.COL | C2520C-3R3G-A | T | 76.2/62.7 |
| L250 | 6200010820 | S.COL | C2520C-2R7G-A | T | 51.9/74.9 |
| L251 | 6190001421 | COL | #E526GN-110502 | | |

M.=Mounted side (T: Mounted on the Top side, B: Mounted on the Bottom side)
S.=Surface mount

## [RXPLL-A UNIT]

| REF NO. | ORDER NO. | DESCRIPTION | M. | H/V LOCATION |
|---|---|---|---|---|
| L252 | 6200010820 | S.COL C2520C-2R7G-A | T | 76.2/75.2 |
| L260 | 6200010820 | S.COL C2520C-2R7G-A | T | 51.9/87.4 |
| L261 | 6190001411 | COL #E526GN-110501 | | |
| L262 | 6200010820 | S.COL C2520C-2R7G-A | T | 76.2/87.7 |
| L270 | 6200010810 | S.COL C2520C-2R2G-A | T | 51.9/99.8 |
| L271 | 6190001411 | COL #E526GN-110501 | | |
| L272 | 6200010810 | S.COL C2520C-2R2G-A | T | 76/100.2 |
| L280 | 6200005011 | S.COL NLV25T-100J | T | 67.4/25.5 |
| L302 | 6200001831 | S.COL NLV32T-100J | T | 89.3/42.6 |
| L331 | 6200002641 | S.COL NLV25T-R15J | T | 95.1/34.1 |
| L332 | 6200002411 | S.COL NLV25T-056J | B | 93.2/36 |
| L341 | 6200003261 | S.COL NLV32T-101J | T | 87/39.6 |
| L351 | 6200001831 | S.COL NLV32T-100J | T | 91.3/62 |
| L421 | 6200008641 | S.COL NLV32T-391J | T | 87/81 |
| L441 | 6200002601 | S.COL NLV25T-047J | T | 91.9/72.3 |
| L442 | 6200010730 | S.COL C2520C-68NG-A | T | 90.5/78.2 |
| L451 | 6200002641 | S.COL NLV25T-R15J | T | 95/81 |
| L452 | 6200003261 | S.COL NLV32T-101J | T | 87/78 |
| L501 | 6200001831 | S.COL NLV32T-100J | T | 31/125.8 |
| L530 | 6200003171 | S.COL NLV32T-330J | T | 14.6/134.9 |
| L531 | 6200003171 | S.COL NLV32T-330J | T | 14.6/130.8 |
| L532 | 6200003171 | S.COL NLV32T-330J | T | 15.5/127.1 |
| L541 | 6200010790 | S.COL C2520C-3R9G-A | T | 56.3/139.6 |
| L542 | 6190001421 | COL #E526GN-110502 | | |
| L543 | 6200010790 | S.COL C2520C-3R9G-A | T | 68.4/147.9 |
| L544 | 6200003261 | S.COL NLV32T-101J | B | 65.9/142.1 |
| L545 | 6200003261 | S.COL NLV32T-101J | B | 51.3/139.6 |
| L561 | 6200003261 | S.COL NLV32T-101J | B | 64/156 |
| L562 | 6200001831 | S.COL NLV32T-100J | B | 74.6/151.8 |
| L565 | 6150004250 | COL LS-471A (C-14922) | | |
| L566 | 6150004250 | COL LS-471A (C-14922) | | |
| L591 | 6200007790 | S.COL LQW2BHNR15J03L | T | 60.5/171.5 |
| L651 | 6200001831 | S.COL NLV32T-100J | T | 15.5/176.2 |
| L681 | 6200005491 | S.COL NLV32T-331J | T | 37.4/176.2 |
| L682 | 6200008641 | S.COL NLV32T-391J | T | 37.8/172.6 |
| L683 | 6200008641 | S.COL NLV32T-391J | T | 40.2/166.2 |
| L701 | 6200003261 | S.COL NLV32T-101J | T | 23.6/120 |
| L702 | 6150004971 | S.COL LS-522-LF | T | 37.6/108.6 |
| L703 | 6150004971 | S.COL LS-522-LF | T | 37.5/118.5 |
| L801 | 6150004280 | COL LS-484B (C-14927) | | |
| L812 | 6200003231 | S.COL NLV32T-181J | B | 75.3/174.1 |
| L821 | 6140003530 | COL LR-395 | | |
| L822 | 6140003530 | COL LR-395 | | |
| L831 | 6140003770 | S.COL LR-414 4KBL (STP-01435) | T | 91.6/171.6 |
| L834 | 6150004280 | COL LS-484B (C-14927) | | |
| L1001 | 6190001650 | COL ELC06D102E | | |
| L1002 | 6140004400 | COL LR-499 | | |
| L1004 | 6140003890 | COL LR-488 | | |
| L1005 | 6180001000 | COL LAL 04NA 102K | | |
| L1006 | 6140003900 | COL LR-489 | | |
| L1007 | 6140003800 | COL LR-439 | | |
| L1008 | 6190001650 | COL ELC06D102E | | |
| L1009 | 6190001650 | COL ELC06D102E | | |
| L1010 | 6140003880 | COL LR-486 | | |
| L1011 | 6140003880 | COL LR-486 | | |
| L1012 | 6140003800 | COL LR-439 | | |
| L1013 | 6200010680 | S.COL C2520C-R22G-A | T | 155/55.2 |
| L1014 | 6200010680 | S.COL C2520C-R22G-A | T | 157.9/12.4 |
| L1015 | 6200007790 | S.COL LQW2BHNR15J03L | B | 163.5/27.5 |
| L1052 | 6200010740 | S.COL C2520C-R27G-A | T | 177.8/74.6 |
| L1053 | 6200010740 | S.COL C2520C-R27G-A | T | 173.8/73.5 |
| L1054 | 6200010740 | S.COL C2520C-R27G-A | T | 169.4/72.6 |
| L1055 | 6140003960 | COL LR-495 | | |
| L1056 | 6200010730 | S.COL C2520C-68NG-A | T | 171/83.8 |
| L1058 | 6190001631 | COL #E544EN-100021 | | |
| L1060 | 6200010730 | S.COL C2520C-68NG-A | T | 149.1/76.4 |
| L1062 | 6200011450 | S.COL C2520C-R39G-A | T | 145.1/81.4 |
| L1063 | 6200010650 | S.COL C2520C-R12G-A | T | 140.9/82.5 |
| L1071 | 6200007780 | S.COL LQW2BHNR12J03L | B | 164.9/79.2 |
| L1072 | 6200007780 | S.COL LQW2BHNR12J03L | B | 168/76.1 |
| L1091 | 6200003950 | S.COL HF50ACC 322513-T | B | 171/149 |
| L1092 | 6200003950 | S.COL HF50ACC 322513-T | T | 149.7/136.5 |
| L1093 | 6200003950 | S.COL HF50ACC 322513-T | T | 157/135.2 |
| L1101 | 6140003920 | COL LR-491 | | |
| L1102 | 6200010650 | S.COL C2520C-R12G-A | T | 176.9/117.9 |
| L1103 | 6180001250 | COL LAL 04NA 3R3K | | |
| L1104 | 6200010870 | S.COL C2520C-R33G-A | T | 178.3/135.9 |
| L1105 | 6140003910 | COL LR-490 | | |
| L1151 | 6140004640 | COL LR-519 | | |
| L1201 | 6200007780 | S.COL LQW2BHNR12J03L | B | 119.3/17.4 |
| L1208 | 6140003800 | COL LR-439 | | |
| L1209 | 6200001831 | S.COL NLV32T-100J | T | 121.1/20.8 |
| L1210 | 6140004440 | COL LR-503 | | |
| L1211 | 6200009690 | S.COL LQH43CN101K03L | T | 115.7/34.6 |
| L1212 | 6200001831 | S.COL NLV32T-100J | T | 106.8/20.8 |
| L1213 | 6140004440 | COL LR-503 | | |
| L1214 | 6200009690 | S.COL LQH43CN101K03L | T | 105.9/34.8 |
| L1216 | 6140003800 | COL LR-439 | | |
| L1217 | 6200007750 | S.COL LQW2BHN56NJ03L | T | 147.9/63.7 |
| L1218 | 6200007770 | S.COL LQW2BHNR10J03L | T | 153.3/65.1 |
| L1219 | 6200007790 | S.COL LQW2BHNR15J03L | T | 153.2/68.4 |
| L1220 | 6140000930 | COL LR-116 | | |

## [RXPLL-A UNIT]

| REF NO. | ORDER NO. | DESCRIPTION | M. | H/V LOCATION |
|---|---|---|---|---|
| L1221 | 6200003261 | S.COL NLV32T-101J | B | 149.5/110.9 |
| L1222 | 6150001770 | COL LS-198 | | |
| L1223 | 6200007750 | S.COL LQW2BHN56NJ03L | B | 151.3/100.7 |
| L1228 | 6200010870 | S.COL C2520C-R33G-A | T | 158.7/71.3 |
| L1229 | 6200003950 | S.COL HF50ACC 322513-T | B | 164.7/115 |
| L1301 | 6200008090 | S.COL LQW2BHN68NJ03L | T | 157.1/111.9 |
| L1302 | 6200008090 | S.COL LQW2BHN68NJ03L | T | 156.4/115.5 |
| L1303 | 6200008090 | S.COL LQW2BHN68NJ03L | T | 153.4/117.5 |
| L1304 | 6200010870 | S.COL C2520C-R33G-A | T | 153.8/123 |
| L1305 | 6200003001 | S.COL NLV32T-R22J | T | 159.2/124.5 |
| L1306 | 6200001831 | S.COL NLV32T-100J | B | 152.7/118.6 |
| L1307 | 6200003001 | S.COL NLV32T-R22J | T | 153.3/112 |
| L1351 | 6200001831 | S.COL NLV32T-100J | T | 143/76.4 |
| L1353 | 6200010740 | S.COL C2520C-R27G-A | T | 141.6/67.5 |
| L1354 | 6200001831 | S.COL NLV32T-100J | T | 136.4/68 |
| L1401 | 6150004280 | COL LS-484B (C-14927) | | |
| L1402 | 6150004280 | COL LS-484B (C-14927) | | |
| L1403 | 6150004280 | COL LS-484B (C-14927) | | |
| L1404 | 6150004280 | COL LS-484B (C-14927) | | |
| L1405 | 6200007770 | S.COL LQW2BHNR10J03L | B | 112.5/111.4 |
| L1406 | 6200007750 | S.COL LQW2BHN56NJ03L | B | 116.6/111.4 |
| L1407 | 6140003930 | COL LR-492 | | |
| L1408 | 6190001621 | COL #E544EN-100028 | | |
| L1409 | 6200003191 | S.COL NLV32T-470J | B | 135.8/125.4 |
| L1410 | 6150004280 | COL LS-484B (C-14927) | | |
| L1411 | 6150004280 | COL LS-484B (C-14927) | | |
| L1501 | 6200003520 | S.COL ELJFB 102K-F | T | 142.1/145.1 |
| L1652 | 6200002520 | S.COL ELJNC R18K-F | T | 112.9/133.1 |
| L1653 | 6200001831 | S.COL NLV32T-100J | B | 105.4/124.6 |
| L1654 | 6200001831 | S.COL NLV32T-100J | B | 112.4/141.9 |
| L1655 | 6200001831 | S.COL NLV32T-100J | B | 124.7/139.8 |
| L1701 | 6200001831 | S.COL NLV32T-100J | T | 167/160 |
| L1702 | 6200003950 | S.COL HF50ACC 322513-T | T | 175.6/169.8 |
| L1703 | 6200003950 | S.COL HF50ACC 322513-T | T | 172.6/169.8 |
| L1704 | 6200003950 | S.COL HF50ACC 322513-T | T | 169.6/169.8 |
| L1705 | 6200003950 | S.COL HF50ACC 322513-T | T | 165.5/169.8 |
| L1803 | 6200003950 | S.COL HF50ACC 322513-T | B | 132/54.8 |
| L1804 | 6200003950 | S.COL HF50ACC 322513-T | B | 118/154.8 |
| L1805 | 6200003950 | S.COL HF50ACC 322513-T | B | 155.2/132 |
| L1807 | 6200003950 | S.COL HF50ACC 322513-T | B | 118/151.3 |
| L1808 | 6200003950 | S.COL HF50ACC 322513-T | B | 141.3/162 |
| L1809 | 6200003950 | S.COL HF50ACC 322513-T | B | 149.5/115.6 |
| | | | | |
| R1 | 7030005871 | S.RES ERA3YKD 104V (100 k) | T | 32.5/19.2 |
| R2 | 7030005321 | S.RES ERA3YED 103V (10 k) | T | 31.2/19.2 |
| R3 | 7030003550 | S.RES ERJ3GEYJ 822 V (8.2 k) | T | 16.9/23.5 |
| R4 | 7030003550 | S.RES ERJ3GEYJ 822 V (8.2 k) | T | 16.9/24.8 |
| R5 | 7030003550 | S.RES ERJ3GEYJ 822 V (8.2 k) | T | 13.3/31.3 |
| R6 | 7030003550 | S.RES ERJ3GEYJ 822 V (8.2 k) | T | 13.3/30 |
| R7 | 7030003500 | S.RES ERJ3GEYJ 332 V (3.3 k) | B | 26.7/12.9 |
| R8 | 7030003470 | S.RES ERJ3GEYJ 182 V (1.8 k) | B | 28.2/14.6 |
| R9 | 7030003680 | S.RES ERJ3GEYJ 104 V (100 k) | B | 27.5/10.6 |
| R10 | 7030003360 | S.RES ERJ3GEYJ 221 V (220) | T | 19/16 |
| R11 | 7030003360 | S.RES ERJ3GEYJ 221 V (220) | T | 20.3/16 |
| R12 | 7030003360 | S.RES ERJ3GEYJ 221 V (220) | T | 22.4/16 |
| R13 | 7030003360 | S.RES ERJ3GEYJ 221 V (220) | T | 23.7/16 |
| R14 | 7030003360 | S.RES ERJ3GEYJ 221 V (220) | T | 25/16 |
| R15 | 7030003360 | S.RES ERJ3GEYJ 221 V (220) | T | 26.4/16.2 |
| R16 | 7030003360 | S.RES ERJ3GEYJ 221 V (220) | T | 32.5/15.4 |
| R17 | 7030003360 | S.RES ERJ3GEYJ 221 V (220) | T | 33.8/15.4 |
| R30 | 7030003240 | S.RES ERJ3GEYJ 220 V (22) | T | 21.7/113.7 |
| R31 | 7030003600 | S.RES ERJ3GEYJ 223 V (22 k) | T | 20.4/111.1 |
| R32 | 7030003320 | S.RES ERJ3GEYJ 101 V (100) | T | 23/113.7 |
| R33 | 7030003340 | S.RES ERJ3GEYJ 151 V (150) | T | 19.1/115 |
| R51 | 7030011030 | S.RES ERJ1TYJ 270U (27) | T | 66.3/13.9 |
| R52 | 7030010550 | S.RES ERJ1TYJ 820U (82) | B | 66.3/13.9 |
| R61 | 7030011030 | S.RES ERJ1TYJ 270U (27) | T | 45.1/13.9 |
| R100 | 7030003860 | S.RES ERJ3GE JPW V | T | 35.4/101.5 |
| R101 | 7030003800 | S.RES ERJ3GEYJ 105 V (1 M) | T | 34.1/101.5 |
| R103 | 7030007230 | S.RES ERA3YED 102V (1 k) | T | 25.1/100.3 |
| R104 | 7030007230 | S.RES ERA3YED 102V (1 k) | T | 26.4/100.3 |
| R105 | 7030007230 | S.RES ERA3YED 102V (1 k) | T | 27.8/100.3 |
| R106 | 7030003360 | S.RES ERJ3GEYJ 221 V (220) | T | 29.1/100.3 |
| R107 | 7030003320 | S.RES ERJ3GEYJ 101 V (100) | T | 38/101.5 |
| R108 | 7030007230 | S.RES ERA3YED 102V (1 k) | T | 28.9/79 |
| R109 | 7030007230 | S.RES ERA3YED 102V (1 k) | T | 41.9/84.5 |
| R110 | 7030007220 | S.RES ERA3YED 202V (2 k) | T | 14.6/100.5 |
| R111 | 7030007220 | S.RES ERA3YED 202V (2 k) | T | 17.2/100.5 |
| R112 | 7030007220 | S.RES ERA3YED 202V (2 k) | T | 17.2/99.2 |
| R113 | 7030007220 | S.RES ERA3YED 202V (2 k) | T | 17.2/97.9 |
| R114 | 7030007220 | S.RES ERA3YED 202V (2 k) | T | 17.2/96.6 |
| R115 | 7030007220 | S.RES ERA3YED 202V (2 k) | T | 17.2/95.2 |
| R116 | 7030007220 | S.RES ERA3YED 202V (2 k) | T | 17.2/93.9 |
| R117 | 7030007220 | S.RES ERA3YED 202V (2 k) | T | 17.2/92.6 |
| R118 | 7030007200 | S.RES ERA3YEB 202V (2 k) | T | 17.2/91.3 |
| R119 | 7030007200 | S.RES ERA3YEB 202V (2 k) | T | 17.2/89.6 |
| R120 | 7030007200 | S.RES ERA3YEB 202V (2 k) | T | 17.2/87 |
| R121 | 7030007200 | S.RES ERA3YEB 202V (2 k) | T | 17.2/84.4 |
| R122 | 7030007200 | S.RES ERA3YEB 202V (2 k) | T | 17.2/81.8 |
| R123 | 7030007230 | S.RES ERA3YED 102V (1 k) | T | 14.6/99.2 |
| R124 | 7030007230 | S.RES ERA3YED 102V (1 k) | T | 14.6/97.9 |

M.=Mounted side (T: Mounted on the Top side, B: Mounted on the Bottom side)
S.=Surface mount

## [RXPLL-A UNIT]

| REF NO. | ORDER NO. | DESCRIPTION | M. | H/V LOCATION |
|---|---|---|---|---|
| R125 | 7030007230 | S.RES ERA3YED 102V (1 k) | T | 14.6/96.6 |
| R126 | 7030007230 | S.RES ERA3YED 102V (1 k) | T | 14.6/95.2 |
| R127 | 7030007230 | S.RES ERA3YED 102V (1 k) | T | 14.6/93.9 |
| R128 | 7030007230 | S.RES ERA3YED 102V (1 k) | T | 14.6/92.6 |
| R129 | 7030007210 | S.RES ERA3YEB 102V (1 k) | T | 14.6/91.3 |
| R130 | 7030007210 | S.RES ERA3YEB 102V (1 k) | T | 14.6/89.6 |
| R131 | 7030007210 | S.RES ERA3YEB 102V (1 k) | T | 14.6/88.3 |
| R132 | 7030007210 | S.RES ERA3YEB 102V (1 k) | T | 14.6/87 |
| R133 | 7030007210 | S.RES ERA3YEB 102V (1 k) | T | 14.6/85.7 |
| R134 | 7030009861 | S.RES ERA3YED 471V (470) | T | 14.6/84.4 |
| R135 | 7030003860 | S.RES ERJ3GE JPW V | T | 30.4/75.8 |
| R136 | 7030003800 | S.RES ERJ3GEYJ 105 V (1 M) | T | 33/77.1 |
| R137 | 7030003200 | S.RES ERJ3GEYJ 100 V (10) | T | 35.5/75.8 |
| R138 | 7030003860 | S.RES ERJ3GE JPW V | T | 16.8/78.6 |
| R139 | 7030003860 | S.RES ERJ3GE JPW V | T | 17.6/75.8 |
| R140 | 7030007230 | S.RES ERA3YED 102V (1 k) | B | 31.2/92.1 |
| R141 | 7030003320 | S.RES ERJ3GEYJ 101 V (100) | B | 33.8/86.7 |
| R150 | 7030003330 | S.RES ERJ3GEYJ 121 V (120) | B | 37.8/86.2 |
| R151 | 7030003220 | S.RES ERJ3GEYJ 150 V (15) | B | 38.6/88.1 |
| R152 | 7030005871 | S.RES ERA3YKD 104V (100 k) | B | 36.2/82.5 |
| R153 | 7030005321 | S.RES ERA3YED 103V (10 k) | T | 19.2/62.7 |
| R154 | 7030003320 | S.RES ERJ3GEYJ 101 V (100) | B | 26.3/54.1 |
| R155 | 7030003350 | S.RES ERJ3GEYJ 181 V (180) | B | 23/54.1 |
| R156 | 7030005871 | S.RES ERA3YKD 104V (100 k) | T | 24.6/53.1 |
| R157 | 7030005871 | S.RES ERA3YKD 104V (100 k) | T | 26.9/58 |
| R158 | 7030003340 | S.RES ERJ3GEYJ 151 V (150) | T | 30/57.3 |
| R159 | 7030003320 | S.RES ERJ3GEYJ 101 V (100) | B | 33.6/61.4 |
| R160 | 7030003360 | S.RES ERJ3GEYJ 221 V (220) | B | 33.6/59.6 |
| R161 | 7030003640 | S.RES ERJ3GEYJ 473 V (47 k) | B | 33.6/54.8 |
| R163 | 7030003220 | S.RES ERJ3GEYJ 150 V (15) | B | 30.2/56.6 |
| R164 | 7030003310 | S.RES ERJ3GEYJ 820 V (82) | B | 34.1/70.4 |
| R165 | 7030003320 | S.RES ERJ3GEYJ 101 V (100) | B | 30.8/70.4 |
| R166 | 7030003320 | S.RES ERJ3GEYJ 101 V (100) | B | 30.8/72.2 |
| R167 | 7030003240 | S.RES ERJ3GEYJ 220 V (22) | B | 37.4/75.8 |
| R168 | 7030003360 | S.RES ERJ3GEYJ 221 V (220) | B | 34.1/75.8 |
| R169 | 7030003640 | S.RES ERJ3GEYJ 473 V (47 k) | B | 30.8/75.8 |
| R202 | 7030007230 | S.RES ERA3YED 102V (1 k) | T | 22.2/39.7 |
| R203 | 7030007230 | S.RES ERA3YED 102V (1 k) | T | 22.2/38.4 |
| R204 | 7030003360 | S.RES ERJ3GEYJ 221 V (220) | T | 22.2/37.1 |
| R205 | 7030005321 | S.RES ERA3YED 103V (10 k) | T | 27.4/34 |
| R206 | 7030003220 | S.RES ERJ3GEYJ 150 V (15) | T | 31.1/45.7 |
| R210 | 7030005351 | S.RES ERA3YED 182V (1.8 k) | T | 35.6/37.5 |
| R217 | 7030009651 | S.RES ERA3YHD 820V (82) | B | 40.4/42.8 |
| R219 | 7030009691 | S.RES ERA3YED 101V (100) | B | 40/35.7 |
| R220 | 7030005871 | S.RES ERA3YKD 104V (100 k) | T | 73.2/37.6 |
| R221 | 7030005871 | S.RES ERA3YKD 104V (100 k) | T | 72.3/30.9 |
| R222 | 7030003360 | S.RES ERJ3GEYJ 221 V (220) | T | 81.4/38.3 |
| R223 | 7030007230 | S.RES ERA3YED 102V (1 k) | T | 81.9/31.9 |
| R224 | 7030003320 | S.RES ERJ3GEYJ 101 V (100) | T | 73.2/40.2 |
| R230 | 7030005871 | S.RES ERA3YKD 104V (100 k) | T | 73.2/50.1 |
| R231 | 7030005871 | S.RES ERA3YKD 104V (100 k) | T | 72.3/43.3 |
| R232 | 7030003360 | S.RES ERJ3GEYJ 221 V (220) | T | 81.4/50.8 |
| R233 | 7030007230 | S.RES ERA3YED 102V (1 k) | T | 81.9/44.4 |
| R234 | 7030003320 | S.RES ERJ3GEYJ 101 V (100) | T | 73.2/52.7 |
| R240 | 7030005871 | S.RES ERA3YKD 104V (100 k) | T | 73.2/62.6 |
| R241 | 7030005871 | S.RES ERA3YKD 104V (100 k) | T | 72.3/55.8 |
| R242 | 7030003360 | S.RES ERJ3GEYJ 221 V (220) | T | 81.4/63.3 |
| R243 | 7030007230 | S.RES ERA3YED 102V (1 k) | T | 81.9/56.9 |
| R244 | 7030003320 | S.RES ERJ3GEYJ 101 V (100) | T | 73.2/65.2 |
| R250 | 7030005871 | S.RES ERA3YKD 104V (100 k) | T | 73.2/75.1 |
| R251 | 7030005871 | S.RES ERA3YKD 104V (100 k) | T | 72.3/68.4 |
| R252 | 7030003360 | S.RES ERJ3GEYJ 221 V (220) | T | 81.4/75.8 |
| R253 | 7030007230 | S.RES ERA3YED 102V (1 k) | T | 81.9/69.4 |
| R254 | 7030003320 | S.RES ERJ3GEYJ 101 V (100) | T | 73.2/77.7 |
| R260 | 7030005871 | S.RES ERA3YKD 104V (100 k) | T | 73.2/87.6 |
| R261 | 7030005871 | S.RES ERA3YKD 104V (100 k) | T | 72.3/80.9 |
| R262 | 7030003360 | S.RES ERJ3GEYJ 221 V (220) | T | 81.4/88.3 |
| R263 | 7030007230 | S.RES ERA3YED 102V (1 k) | T | 81.9/81.9 |
| R264 | 7030003320 | S.RES ERJ3GEYJ 101 V (100) | T | 73.2/90.2 |
| R270 | 7030005871 | S.RES ERA3YKD 104V (100 k) | T | 73.2/99.5 |
| R271 | 7030005871 | S.RES ERA3YKD 104V (100 k) | T | 72.3/92.8 |
| R272 | 7030003360 | S.RES ERJ3GEYJ 221 V (220) | T | 81.4/100.8 |
| R273 | 7030007230 | S.RES ERA3YED 102V (1 k) | T | 81.9/93.9 |
| R274 | 7030003320 | S.RES ERJ3GEYJ 101 V (100) | T | 73.2/102.1 |
| R301 | 7030003200 | S.RES ERJ3GEYJ 100 V (10) | T | 86.5/30.6 |
| R302 | 7030007230 | S.RES ERA3YED 102V (1 k) | T | 86.5/29.3 |
| R303 | 7030003360 | S.RES ERJ3GEYJ 221 V (220) | T | 92.1/28 |
| R304 | 7030003490 | S.RES ERJ3GEYJ 272 V (2.7 k) | T | 94/30.1 |
| R305 | 7030003510 | S.RES ERJ3GEYJ 392 V (3.9 k) | T | 95.3/30.1 |
| R306 | 7030003360 | S.RES ERJ3GEYJ 221 V (220) | T | 94.7/32.2 |
| R307 | 7030009841 | S.RES ERA3YHD 330V (33) | T | 92.1/32.2 |
| R308 | 7030009851 | S.RES ERA3YED 271V (270) | B | 92.6/43.4 |
| R309 | 7030003540 | S.RES ERJ3GEYJ 682 V (6.8 k) | B | 89.1/47 |
| R310 | 7030003500 | S.RES ERJ3GEYJ 332 V (3.3 k) | B | 92.6/47 |
| R311 | 7030003350 | S.RES ERJ3GEYJ 181 V (180) | B | 89.1/45.2 |
| R312 | 7030003360 | S.RES ERJ3GEYJ 221 V (220) | B | 92.4/27.8 |
| R313 | 7030003490 | S.RES ERJ3GEYJ 272 V (2.7 k) | B | 91.1/23.1 |
| R314 | 7030003510 | S.RES ERJ3GEYJ 392 V (3.9 k) | B | 88.3/23.1 |
| R315 | 7030003360 | S.RES ERJ3GEYJ 221 V (220) | B | 87.5/25.1 |
| R316 | 7030003280 | S.RES ERJ3GEYJ 470 V (47) | B | 78.3/26.1 |
| R317 | 7030006220 | S.RES ERJ12YJ470U (47) | B | 90/31.4 |
| R318 | 7030009841 | S.RES ERA3YHD 330V (33) | B | 92.6/41.6 |

## [RXPLL-A UNIT]

| REF NO. | ORDER NO. | DESCRIPTION | M. | H/V LOCATION |
|---|---|---|---|---|
| R341 | 7030007230 | S.RES ERA3YED 102V (1 k) | T | 92.1/40.1 |
| R342 | 7030005321 | S.RES ERA3YED 103V (10 k) | T | 86.5/32.2 |
| R343 | 7030007230 | S.RES ERA3YED 102V (1 k) | T | 89.3/34.8 |
| R351 | 7030003200 | S.RES ERJ3GEYJ 100 V (10) | B | 89.1/52.4 |
| R352 | 7030010980 | S.RES ERA3YHD 470V (47) | T | 89.3/55.8 |
| R353 | 7030009591 | S.RES ERA3YED 472V (4.7 k) | T | 89.3/54.5 |
| R354 | 7030009591 | S.RES ERA3YED 472V (4.7 k) | T | 89.3/50.4 |
| R355 | 7030009591 | S.RES ERA3YED 472V (4.7 k) | T | 89.3/53.2 |
| R356 | 7030003320 | S.RES ERJ3GEYJ 101 V (100) | T | 89.3/57.1 |
| R357 | 7310005050 | S.TRI RH03ADCS3X (4.7 k) | T | 93.6/52.7 |
| R358 | 7030010980 | S.RES ERA3YHD 470V (47) | T | 94.9/56.4 |
| R359 | 7030003320 | S.RES ERJ3GEYJ 101 V (100) | T | 94.9/59 |
| R360 | 7030003320 | S.RES ERJ3GEYJ 101 V (100) | B | 92.6/63.9 |
| R361 | 7030003490 | S.RES ERJ3GEYJ 272 V (2.7 k) | B | 89.2/62.1 |
| R362 | 7030003510 | S.RES ERJ3GEYJ 392 V (3.9 k) | B | 92.6/60.3 |
| R363 | 7030003320 | S.RES ERJ3GEYJ 101 V (100) | B | 92.6/65.7 |
| R364 | 7030003410 | S.RES ERJ3GEYJ 561 V (560) | T | 94.9/82.9 |
| R365 | 7030007860 | S.RES ERJ3GEYJ 8R2V (8.2) | T | 92/83.4 |
| R366 | 7030003410 | S.RES ERJ3GEYJ 561 V (560) | T | 94.9/84.2 |
| R368 | 7030005321 | S.RES ERA3YED 103V (10 k) | T | 86.1/59.6 |
| R369 | 7030008240 | S.RES ERJ12YJ0R00U | B | 95.3/57.1 |
| R421 | 7030007230 | S.RES ERA3YED 102V (1 k) | T | 92.1/87.8 |
| R422 | 7030007230 | S.RES ERA3YED 102V (1 k) | T | 89.3/87.8 |
| R423 | 7030007230 | S.RES ERA3YED 102V (1 k) | T | 92.1/89.1 |
| R424 | 7030007230 | S.RES ERA3YED 102V (1 k) | T | 89.3/89.1 |
| R425 | 7030003410 | S.RES ERJ3GEYJ 561 V (560) | T | 90.1/81.6 |
| R426 | 7030003410 | S.RES ERJ3GEYJ 561 V (560) | T | 91.5/93.3 |
| R427 | 7030003320 | S.RES ERJ3GEYJ 101 V (100) | B | 86.8/87.3 |
| R428 | 7030009861 | S.RES ERA3YED 471V (470) | B | 92.1/88 |
| R429 | 7030009861 | S.RES ERA3YED 471V (470) | B | 89.3/88 |
| R441 | 7030007230 | S.RES ERA3YED 102V (1K) | T | 92.1/75.5 |
| R442 | 7030005321 | S.RES ERA3YED 103V (10 k) | T | 88.9/70.9 |
| R443 | 7030007230 | S.RES ERA3YED 102V (1K) | T | 88.9/72.2 |
| R501 | 7030003360 | S.RES ERJ3GEYJ 221 V (220) | T | 29.2/153.1 |
| R502 | 7030007230 | S.RES ERA3YED 102V (1 k) | T | 27.9/153.1 |
| R503 | 7030007230 | S.RES ERA3YED 102V (1 k) | T | 26.5/153.1 |
| R504 | 7030007230 | S.RES ERA3YED 102V (1 k) | T | 25.2/153.1 |
| R506 | 7030003800 | S.RES ERJ3GEYJ 105 V (1 M) | T | 34/154.5 |
| R507 | 7030003860 | S.RES ERJ3GE JPW V | B | 50.8/127 |
| R509 | 7030007230 | S.RES ERA3YED 102V (1 k) | T | 42.5/136 |
| R510 | 7030007220 | S.RES ERA3YED 202V (2 k) | T | 14.6/153.6 |
| R511 | 7030007220 | S.RES ERA3YED 202V (2 k) | T | 17.2/153.6 |
| R512 | 7030007220 | S.RES ERA3YED 202V (2 k) | T | 17.2/152.3 |
| R513 | 7030007220 | S.RES ERA3YED 202V (2 k) | T | 17.2/151 |
| R514 | 7030007220 | S.RES ERA3YED 202V (2 k) | T | 17.2/149.7 |
| R515 | 7030007220 | S.RES ERA3YED 202V (2 k) | T | 17.2/148.3 |
| R516 | 7030007220 | S.RES ERA3YED 202V (2 k) | T | 17.2/147 |
| R517 | 7030007220 | S.RES ERA3YED 202V (2 k) | T | 17.2/145.7 |
| R518 | 7030007200 | S.RES ERA3YEB 202V (2 k) | T | 17.2/144.4 |
| R519 | 7030007200 | S.RES ERA3YEB 202V (2 k) | T | 17.2/142.7 |
| R520 | 7030007200 | S.RES ERA3YEB 202V (2 k) | T | 17.2/141.4 |
| R521 | 7030007200 | S.RES ERA3YEB 202V (2 k) | T | 17.2/140.1 |
| R522 | 7030007200 | S.RES ERA3YEB 202V (2 k) | T | 17.2/138.8 |
| R523 | 7030007230 | S.RES ERA3YED 102V (1 k) | T | 14.6/152.3 |
| R524 | 7030007230 | S.RES ERA3YED 102V (1 k) | T | 14.6/151 |
| R525 | 7030007230 | S.RES ERA3YED 102V (1 k) | T | 14.6/149.7 |
| R526 | 7030007230 | S.RES ERA3YED 102V (1 k) | T | 14.6/148.3 |
| R527 | 7030007230 | S.RES ERA3YED 102V (1 k) | T | 14.6/147 |
| R528 | 7030007230 | S.RES ERA3YED 102V (1 k) | T | 14.6/145.7 |
| R529 | 7030007210 | S.RES ERA3YEB 102V (1 k) | T | 14.6/144.4 |
| R530 | 7030007210 | S.RES ERA3YEB 102V (1 k) | T | 14.6/142.7 |
| R531 | 7030007210 | S.RES ERA3YEB 102V (1 k) | T | 14.6/141.4 |
| R532 | 7030007210 | S.RES ERA3YEB 102V (1 k) | T | 14.6/140.1 |
| R533 | 7030007210 | S.RES ERA3YEB 102V (1 k) | T | 14.6/138.8 |
| R534 | 7030003860 | S.RES ERJ3GE JPW V | T | 22.2/127.6 |
| R535 | 7030003800 | S.RES ERJ3GEYJ 105 V (1 M) | T | 24.8/129.8 |
| R536 | 7030003200 | S.RES ERJ3GEYJ 100 V (10) | T | 28/128.3 |
| R537 | 7030007230 | S.RES ERA3YED 102V (1 k) | T | 30.3/131.9 |
| R538 | 7030003360 | S.RES ERJ3GEYJ 221 V (220) | B | 34.8/146.5 |
| R540 | 7030007230 | S.RES ERA3YED 102V (1 k) | B | 52.3/142.8 |
| R544 | 7030005871 | S.RES ERA3YKD 104V (100 k) | T | 69.4/140.4 |
| R545 | 7030005871 | S.RES ERA3YKD 104V (100 k) | T | 69.4/139.1 |
| R546 | 7030009861 | S.RES ERA3YED 471V (470) | T | 67.4/150.7 |
| R548 | 7030009591 | S.RES ERA3YED 472V (4.7 k) | B | 43.4/136.5 |
| R550 | 7030009691 | S.RES ERA3YED 101V (100) | B | 43.4/134.7 |
| R554 | 7030009891 | S.RES ERA3YED 151V (150) | B | 47.2/133.9 |
| R555 | 7030003380 | S.RES ERJ3GEYJ 331 V (330) | B | 61.9/142.1 |
| R556 | 7030005981 | S.RES ERA3YED 333V (33 k) | B | 44.2/128.2 |
| R561 | 7030003200 | S.RES ERJ3GEYJ 100 V (10) | T | 71.3/148.5 |
| R562 | 7030003360 | S.RES ERJ3GEYJ 221 V (220) | T | 65.7/155.5 |
| R563 | 7030003490 | S.RES ERJ3GEYJ 272 V (2.7 k) | T | 70.4/151.9 |
| R564 | 7030003510 | S.RES ERJ3GEYJ 392 V (3.9 k) | T | 70.4/150.6 |
| R565 | 7030003360 | S.RES ERJ3GEYJ 221 V (220) | T | 67/155.5 |
| R570 | 7030003230 | S.RES ERJ3GEYJ 180 V (18) | T | 63.1/155.5 |
| R571 | 7030003230 | S.RES ERJ3GEYJ 180 V (18) | T | 58.5/155 |
| R572 | 7030003290 | S.RES ERJ3GEYJ 560 V (56) | B | 57.2/156.3 |
| R573 | 7030009841 | S.RES ERA3YHD 330V (33) | T | 61.8/155.5 |
| R574 | 7030003300 | S.RES ERJ3GEYJ 680 V (68) | T | 60.5/155.5 |
| R575 | 7030003220 | S.RES ERJ3GEYJ 150 V (15) | T | 58.5/156.3 |
| R580 | 7030009861 | S.RES ERA3YED 471V (470) | T | 41.9/153.7 |
| R581 | 7030003360 | S.RES ERJ3GEYJ 221 V (220) | T | 41.9/145.5 |
| R582 | 7030003600 | S.RES ERJ3GEYJ 223 V (22 k) | T | 41.9/149.5 |

M.=Mounted side (T: Mounted on the Top side, B: Mounted on the Bottom side)
S.=Surface mount

## [RXPLL-A UNIT]

| REF NO. | ORDER NO. | DESCRIPTION | M. | H/V LOCATION |
|---|---|---|---|---|
| R587 | 7030009851 | S.RES ERA3YED 271V (270) | T | 55.7/157.6 |
| R588 | 7030003230 | S.RES ERJ3GEYJ 180 V (18) | T | 58.5/158.9 |
| R589 | 7030009851 | S.RES ERA3YED 271V (270) | T | 55.7/158.9 |
| R591 | 7030003320 | S.RES ERJ3GEYJ 101 V (100) | T | 58.2/169.9 |
| R592 | 7030005321 | S.RES ERA3YED 103V (10 k) | T | 58.5/167.9 |
| R593 | 7030003480 | S.RES ERJ3GEYJ 222 V (2.2 k) | T | 58.5/165.1 |
| R594 | 7030003320 | S.RES ERJ3GEYJ 101 V (100) | B | 61.9/168.1 |
| R595 | 7030003640 | S.RES ERJ3GEYJ 473 V (47 k) | B | 55.9/165.3 |
| R596 | 7030003540 | S.RES ERJ3GEYJ 682 V (6.8 k) | B | 54.7/168.9 |
| R603 | 7030003480 | S.RES ERJ3GEYJ 222 V (2.2 k) | T | 56.3/110.9 |
| R604 | 7030007230 | S.RES ERA3YED 102V (1 k) | B | 53.4/115.8 |
| R605 | 7030003320 | S.RES ERJ3GEYJ 101 V (100) | T | 46.8/113.4 |
| R651 | 7030007230 | S.RES ERA3YED 102V (1 k) | B | 23.5/177.1 |
| R652 | 7030003360 | S.RES ERJ3GEYJ 221 V (220) | T | 13.5/170.8 |
| R653 | 7030007230 | S.RES ERA3YED 102V (1 k) | T | 13.5/169.5 |
| R654 | 7030007230 | S.RES ERA3YED 102V (1 k) | T | 13.5/168.2 |
| R656 | 7030003800 | S.RES ERJ3GEYJ 105 V (1 M) | T | 13.4/165.6 |
| R657 | 7030003320 | S.RES ERJ3GEYJ 101 V (100) | T | 20.2/161.4 |
| R661 | 7030007220 | S.RES ERA3YED 202V (2 k) | T | 31.7/162.8 |
| R662 | 7030007220 | S.RES ERA3YED 202V (2 k) | T | 31.7/164.1 |
| R663 | 7030007220 | S.RES ERA3YED 202V (2 k) | T | 31.7/165.4 |
| R664 | 7030007220 | S.RES ERA3YED 202V (2 k) | T | 31.7/166.7 |
| R665 | 7030007220 | S.RES ERA3YED 202V (2 k) | T | 31.7/168 |
| R666 | 7030007220 | S.RES ERA3YED 202V (2 k) | T | 31.7/169.3 |
| R667 | 7030007220 | S.RES ERA3YED 202V (2 k) | T | 31.7/170.6 |
| R668 | 7030007220 | S.RES ERA3YED 202V (2 k) | T | 31.7/171.9 |
| R669 | 7030007200 | S.RES ERA3YEB 202V (2 k) | T | 31.7/173.2 |
| R670 | 7030007200 | S.RES ERA3YEB 202V (2 k) | T | 31.7/174.5 |
| R671 | 7030007200 | S.RES ERA3YEB 202V (2 k) | T | 31.7/175.8 |
| R673 | 7030007230 | S.RES ERA3YED 102V (1 k) | T | 34.3/165.4 |
| R674 | 7030007230 | S.RES ERA3YED 102V (1 k) | T | 34.3/166.7 |
| R675 | 7030007230 | S.RES ERA3YED 102V (1 k) | T | 34.3/168 |
| R676 | 7030007230 | S.RES ERA3YED 102V (1 k) | T | 34.3/169.3 |
| R677 | 7030007230 | S.RES ERA3YED 102V (1 k) | T | 34.3/170.6 |
| R678 | 7030007230 | S.RES ERA3YED 102V (1 k) | T | 34.3/171.9 |
| R679 | 7030007210 | S.RES ERA3YEB 102V (1 k) | T | 34.3/173.2 |
| R680 | 7030007210 | S.RES ERA3YEB 102V (1 k) | T | 34.3/174.5 |
| R681 | 7030007210 | S.RES ERA3YEB 102V (1 k) | T | 34.3/175.8 |
| R682 | 7030003860 | S.RES ERJ3GE JPW V | B | 58.4/166 |
| R685 | 7030003460 | S.RES ERJ3GEYJ 152 V (1.5 k) | T | 38.4/169.7 |
| R686 | 7030003320 | S.RES ERJ3GEYJ 101 V (100) | T | 40.3/163.4 |
| R687 | 7030003470 | S.RES ERJ3GEYJ 182 V (1.8 k) | T | 37.4/165.1 |
| R688 | 7030003480 | S.RES ERJ3GEYJ 222 V (2.2 k) | T | 34.3/162.8 |
| R689 | 7030003360 | S.RES ERJ3GEYJ 221 V (220) | T | 33.6/161.5 |
| R690 | 7030009851 | S.RES ERA3YED 271V (270) | T | 46.4/165.3 |
| R691 | 7030003230 | S.RES ERJ3GEYJ 180 V (18) | T | 48.4/164.8 |
| R692 | 7030009851 | S.RES ERA3YED 271V (270) | T | 46.4/166.6 |
| R693 | 7030003500 | S.RES ERJ3GEYJ 332 V (3.3 k) | T | 37.1/169.7 |
| R704 | 7030009841 | S.RES ERA3YHD 330V (33) | T | 30.8/113.7 |
| R705 | 7030003600 | S.RES ERJ3GEYJ 223 V (22 k) | T | 29.5/113.7 |
| R706 | 7030005321 | S.RES ERA3YED 103V (10 k) | T | 28.2/113.7 |
| R707 | 7030009861 | S.RES ERA3YED 471V (470) | T | 30.8/108.1 |
| R708 | 7030003410 | S.RES ERJ3GEYJ 561 V (560) | T | 43.3/118.8 |
| R709 | 7030007860 | S.RES ERJ3GEYJ 8R2V (8.2) | T | 43.3/116 |
| R710 | 7030003410 | S.RES ERJ3GEYJ 561 V (560) | T | 43.8/121.1 |
| R711 | 7030003320 | S.RES ERJ3GEYJ 101 V (100) | T | 37.9/154.5 |
| R802 | 7030009861 | S.RES ERA3YED 471V (470) | T | 78.3/147.3 |
| R803 | 7030005321 | S.RES ERA3YED 103V (10 k) | T | 79.6/147.3 |
| R804 | 7030003320 | S.RES ERJ3GEYJ 101 V (100) | T | 80.4/149.5 |
| R805 | 7030009851 | S.RES ERA3YED 271V (270) | T | 81.5/158.7 |
| R806 | 7030003230 | S.RES ERJ3GEYJ 180 V (18) | T | 84.3/158.7 |
| R807 | 7030009851 | S.RES ERA3YED 271V (270) | T | 87.1/158.7 |
| R812 | 7030007230 | S.RES ERA3YED 102V (1 k) | T | 73.9/177.6 |
| R814 | 7030005321 | S.RES ERA3YED 103V (10 k) | T | 75.2/177.6 |
| R815 | 7030003320 | S.RES ERJ3GEYJ 101 V (100) | T | 79.6/173.6 |
| R831 | 7030003320 | S.RES ERJ3GEYJ 101 V (100) | B | 85.6/180 |
| R832 | 7030003300 | S.RES ERJ3GEYJ 680 V (68) | B | 88.5/177.2 |
| R833 | 7030003320 | S.RES ERJ3GEYJ 101 V (100) | B | 89.3/174.6 |
| R834 | 7030003380 | S.RES ERJ3GEYJ 331 V (330) | T | 91.6/155.7 |
| R835 | 7030003320 | S.RES ERJ3GEYJ 101 V (100) | T | 94.4/155.7 |
| R836 | 7030003380 | S.RES ERJ3GEYJ 331 V (330) | T | 88.8/145.4 |
| R837 | 7030003220 | S.RES ERJ3GEYJ 150 V (15) | T | 91.6/145.4 |
| R838 | 7030003380 | S.RES ERJ3GEYJ 331 V (330) | T | 94.4/145.4 |
| R839 | 7030005321 | S.RES ERA3YED 103V (10 k) | B | 77.9/171 |
| R840 | 7030003540 | S.RES ERJ3GEYJ 682 V (6.8 k) | B | 74.5/165.7 |
| R1000 | 7030003320 | S.RES ERJ3GEYJ 101 V (100) | B | 177.1/11.2 |
| R1001 | 7030003640 | S.RES ERJ3GEYJ 473 V (47 k) | T | 182.8/63.5 |
| R1002 | 7030003480 | S.RES ERJ3GEYJ 222 V (2.2 k) | T | 183.5/65.7 |
| R1003 | 7030010980 | S.RES ERA3YHD 470V (47) | T | 162/13.4 |
| R1004 | 7030007230 | S.RES ERA3YED 102V (1 k) | B | 166.4/12.9 |
| R1005 | 7030003550 | S.RES ERJ3GEYJ 822 V (8.2 k) | T | 144/26.1 |
| R1006 | 7030007230 | S.RES ERA3YED 102V (1 k) | T | 145.3/26.1 |
| R1007 | 7030004030 | S.RES ERJ3GEYJ 5R6 V (5.6) | B | 153.7/33.6 |
| R1008 | 7030003240 | S.RES ERJ3GEYJ 220 V (22) | T | 144/36.4 |
| R1009 | 7030010980 | S.RES ERA3YHD 470V (47) | T | 182.4/29.3 |
| R1010 | 7030010980 | S.RES ERA3YHD 470V (47) | T | 154.5/33.2 |
| R1013 | 7030007230 | S.RES ERA3YED 102V (1 k) | B | 172.7/40.8 |
| R1014 | 7030007230 | S.RES ERA3YED 102V (1 k) | B | 156.7/40.8 |
| R1015 | 7030003530 | S.RES ERJ3GEYJ 562 V (5.6 k) | B | 172.7/45.4 |
| R1016 | 7030003530 | S.RES ERJ3GEYJ 562 V (5.6 k) | B | 156.7/45.4 |
| R1017 | 7030003530 | S.RES ERJ3GEYJ 562 V (5.6 k) | B | 169.7/12.9 |
| R1018 | 7030003650 | S.RES ERJ3GEYJ 563 V (56 k) | B | 181.1/62.4 |

## [RXPLL-A UNIT]

| REF NO. | ORDER NO. | DESCRIPTION | M. | H/V LOCATION |
|---|---|---|---|---|
| R1019 | 7030005321 | S.RES ERA3YED 103V (10 k) | B | 181.9/65 |
| R1020 | 7030003390 | S.RES ERJ3GEYJ 391 V (390) | T | 179.6/18.3 |
| R1021 | 7030003220 | S.RES ERJ3GEYJ 150 V (15) | T | 177/19.4 |
| R1022 | 7030003390 | S.RES ERJ3GEYJ 391 V (390) | T | 180.9/19.4 |
| R1023 | 7030010980 | S.RES ERA3YHD 470V (47) | B | 149.3/33.5 |
| R1024 | 7030003200 | S.RES ERJ3GEYJ 100 V (10) | B | 150.1/31.4 |
| R1025 | 7030003300 | S.RES ERJ3GEYJ 680 V (68) | T | 178.3/19.4 |
| R1026 | 7030003480 | S.RES ERJ3GEYJ 222 V (2.2 k) | B | 171.2/14.2 |
| R1027 | 7030003200 | S.RES ERJ3GEYJ 100 V (10) | B | 176.5/38.3 |
| R1028 | 7030003200 | S.RES ERJ3GEYJ 100 V (10) | B | 160.5/38.3 |
| R1029 | 7030010980 | S.RES ERA3YHD 470V (47) | B | 178.2/46.1 |
| R1030 | 7030010980 | S.RES ERA3YHD 470V (47) | B | 162.2/46.1 |
| R1051 | 7030003800 | S.RES ERJ3GEYJ 105 V (1 M) | T | 178.6/93.1 |
| R1054 | 7030011500 | S.RES ERA3YHD 270V (27) | T | 149.1/83.2 |
| R1055 | 7030000010 | S.RES MCR10EZHJ JPW | T | 162.1/76.6 |
| R1056 | 7030000010 | S.RES MCR10EZHJ JPW | T | 177.5/71.1 |
| R1071 | 7030010980 | S.RES ERA3YHD 470V (47) | B | 165.9/76.4 |
| R1072 | 7030000010 | S.RES MCR10EZHJ JPW | T | 133.9/84.1 |
| R1073 | 7030000010 | S.RES MCR10EZHJ JPW | T | 135.5/85.7 |
| R1101 | 7310004860 | S.TRI EVM-3YSX50 B53 (502) | T | 180.1/90.2 |
| R1102 | 7030005871 | S.RES ERA3YKD 104V (100 k) | B | 180.2/100.6 |
| R1103 | 7030007680 | S.RES ERJ8ENF 47R0V (47) | T | 181.7/104.7 |
| R1104 | 7030007680 | S.RES ERJ8ENF 47R0V (47) | T | 173.6/107.2 |
| R1105 | 7030003500 | S.RES ERJ3GEYJ 332 V (3.3 k) | T | 176.7/87.7 |
| R1106 | 7030009620 | S.RES ERJ12YJ120U (12) | B | 179.6/117.9 |
| R1107 | 7030010980 | S.RES ERA3YHD 470V (47) | T | 175.6/120.3 |
| R1109 | 7030007180 | S.RES ERJ12YJ150U (15) | B | 176.5/125.7 |
| R1110 | 7030003480 | S.RES ERJ3GEYJ 222 V (2.2 k) | B | 168.5/131.6 |
| R1111 | 7030003480 | S.RES ERJ3GEYJ 222 V (2.2 k) | T | 166.2/130.4 |
| R1113 | 7030003480 | S.RES ERJ3GEYJ 222 V (2.2 k) | T | 166.2/131.7 |
| R1114 | 7030004040 | S.RES ERJ3GEYJ 4R7 V (4.7) | T | 179.2/125.3 |
| R1115 | 7030006240 | S.RES ERJ12YJ181U (180) | B | 176.5/129.9 |
| R1116 | 7030007230 | S.RES ERA3YED 102V (1 k) | T | 175.7/135.3 |
| R1117 | 7030004040 | S.RES ERJ3GEYJ 4R7 V (4.7) | T | 175.7/134 |
| R1118 | 7030003480 | S.RES ERJ3GEYJ 222 V (2.2 k) | T | 175.4/132 |
| R1119 | 7030003470 | S.RES ERJ3GEYJ 182 V (1.8 k) | T | 178/132 |
| R1120 | 7030006070 | S.RES ERJ12YJ101U (100) | B | 177.3/141 |
| R1121 | 7030003240 | S.RES ERJ3GEYJ 220 V (22) | T | 178.6/139.6 |
| R1122 | 7030010980 | S.RES ERA3YHD 470V (47) | T | 171.9/131.1 |
| R1123 | 7030003480 | S.RES ERJ3GEYJ 222 V (2.2 k) | T | 165.7/137.4 |
| R1124 | 7030003460 | S.RES ERJ3GEYJ 152 V (1.5 k) | T | 165.7/140 |
| R1125 | 7030003420 | S.RES ERJ3GEYJ 681 V (680) | B | 171/142.2 |
| R1126 | 7030003200 | S.RES ERJ3GEYJ 100 V (10) | T | 168.4/142.2 |
| R1127 | 7030010980 | S.RES ERA3YHD 470V (47) | T | 174.6/142.9 |
| R1128 | 7030003470 | S.RES ERJ3GEYJ 182 V (1.8 k) | T | 174.6/146.6 |
| R1129 | 7030003470 | S.RES ERJ3GEYJ 182 V (1.8 k) | T | 174.6/148.4 |
| R1130 | 7030003480 | S.RES ERJ3GEYJ 222 V (2.2 k) | T | 180.6/146.4 |
| R1131 | 7030003640 | S.RES ERJ3GEYJ 473 V (47 k) | B | 177.4/90.7 |
| R1132 | 7310004860 | S.TRI EVM-3YSX50 B53 (502) | T | 179.4/84.3 |
| R1133 | 7030003500 | S.RES ERJ3GEYJ 332 V (3.3 k) | T | 175.5/82.5 |
| R1134 | 7030003640 | S.RES ERJ3GEYJ 473 V (47 k) | T | 175.5/83.8 |
| R1135 | 7030005871 | S.RES ERA3YKD 104V (100 k) | T | 182.2/97.8 |
| R1151 | 7030003280 | S.RES ERJ3GEYJ 470 V (47) | T | 134.8/63.9 |
| R1152 | 7030003280 | S.RES ERJ3GEYJ 470 V (47) | B | 117.2/56.3 |
| R1203 | 7030000010 | S.RES MCR10EZHJ JPW | T | 157.5/74.9 |
| R1208 | 7030003480 | S.RES ERJ3GEYJ 222 V (2.2 k) | T | 138.3/53.9 |
| R1209 | 7030005321 | S.RES ERA3YED 103V (10 k) | T | 139.1/51.9 |
| R1210 | 7030003650 | S.RES ERJ3GEYJ 563 V (56 k) | B | 142.5/44.3 |
| R1211 | 7030003860 | S.RES ERJ3GE JPW V | T | 117.6/7.8 |
| R1212 | 7030003860 | S.RES ERJ3GE JPW V | T | 124.8/51.1 |
| R1213 | 7030003200 | S.RES ERJ3GEYJ 100 V (10) | B | 118.8/25 |
| R1214 | 7030003200 | S.RES ERJ3GEYJ 100 V (10) | B | 109/25 |
| R1216 | 7030010980 | S.RES ERA3YHD 470V (47) | B | 120.7/31.6 |
| R1217 | 7030010980 | S.RES ERA3YHD 470V (47) | B | 111.2/31.6 |
| R1220 | 7030010980 | S.RES ERA3YHD 470V (47) | T | 118.7/17.3 |
| R1221 | 7030007230 | S.RES ERA3YED 102V (1 k) | T | 116.4/39.9 |
| R1222 | 7030003530 | S.RES ERJ3GEYJ 562 V (5.6 k) | T | 116.4/38.6 |
| R1223 | 7030010980 | S.RES ERA3YHD 470V (47) | T | 109.3/17.1 |
| R1224 | 7030007230 | S.RES ERA3YED 102V (1 k) | T | 106.6/39.9 |
| R1225 | 7030003530 | S.RES ERJ3GEYJ 562 V (5.6 k) | T | 106.6/38.6 |
| R1226 | 7030003410 | S.RES ERJ3GEYJ 561 V (560) | T | 158.9/92.9 |
| R1227 | 7030003410 | S.RES ERJ3GEYJ 561 V (560) | T | 154/92.9 |
| R1228 | 7310004860 | S.TRI EVM-3YSX50 B53 (502) | T | 156.4/92.9 |
| R1229 | 7030003480 | S.RES ERJ3GEYJ 222 V (2.2 k) | B | 156.1/117.4 |
| R1230 | 7030003480 | S.RES ERJ3GEYJ 222 V (2.2 k) | B | 156.1/119.2 |
| R1231 | 7030003480 | S.RES ERJ3GEYJ 222 V (2.2 k) | B | 156.1/121 |
| R1232 | 7030003600 | S.RES ERJ3GEYJ 223 V (22 k) | T | 156.3/97.5 |
| R1233 | 7030010980 | S.RES ERA3YHD 470V (47) | B | 152.5/109.4 |
| R1301 | 7030010980 | S.RES ERA3YHD 470V (47) | B | 155.7/97.5 |
| R1302 | 7030003860 | S.RES ERJ3GE JPW V | T | 159.3/116.8 |
| R1304 | 7030003620 | S.RES ERJ3GEYJ 333 V (33 k) | T | 156.5/123.2 |
| R1306 | 7030006230 | S.RES ERJ12YJ151U (150) | B | 153.8/124.8 |
| R1307 | 7030003300 | S.RES ERJ3GEYJ 680 V (68) | T | 156.5/128.4 |
| R1311 | 7030000010 | S.RES MCR10EZHJ JPW | T | 140.3/98.8 |
| R1312 | 7030000010 | S.RES MCR10EZHJ JPW | T | 143.2/104.1 |
| R1313 | 7030000010 | S.RES MCR10EZHJ JPW | T | 143.2/101.5 |
| R1357 | 7030007230 | S.RES ERA3YED 102V (1 k) | B | 140.7/70.4 |
| R1358 | 7030003530 | S.RES ERJ3GEYJ 562 V (5.6 k) | B | 142.8/70.4 |
| R1359 | 7030010980 | S.RES ERA3YHD 470V (47) | T | 139.4/64.7 |
| R1360 | 7030007230 | S.RES ERA3YED 102V (1 k) | B | 146.4/67.1 |
| R1361 | 7030003380 | S.RES ERJ3GEYJ 331 V (330) | T | 139.3/68.8 |
| R1362 | 7030005871 | S.RES ERA3YKD 104V (100 k) | B | 144.6/70.4 |

M.=Mounted side (T: Mounted on the Top side, B: Mounted on the Bottom side)
S.=Surface mount

## [RXPLL-A UNIT]

| REF NO. | ORDER NO. | DESCRIPTION | M. | H/V LOCATION |
|---|---|---|---|---|
| R1401 | 7030003200 | S.RES ERJ3GEYJ 100 V (10) | T | 131.5/103.3 |
| R1402 | 7030003300 | S.RES ERJ3GEYJ 680 V (68) | T | 126.4/111 |
| R1403 | 7030007230 | S.RES ERA3YED 102V (1 k) | T | 132/107.7 |
| R1404 | 7030009861 | S.RES ERA3YED 471V (470) | T | 134.6/104.3 |
| R1405 | 7030003340 | S.RES ERJ3GEYJ 151 V (150) | T | 137.2/104.3 |
| R1406 | 7030009591 | S.RES ERA3YED 472V (4.7 k) | T | 135.2/106.2 |
| R1407 | 7030003550 | S.RES ERJ3GEYJ 822 V (8.2 k) | B | 135.4/104.3 |
| R1408 | 7030003200 | S.RES ERJ3GEYJ 100 V (10) | T | 120.9/109 |
| R1409 | 7030009591 | S.RES ERA3YED 472V (4.7 k) | T | 120.5/114.9 |
| R1410 | 7030006091 | S.RES ERA3YED 822V (8.2 k) | B | 124.2/114.4 |
| R1411 | 7030005871 | S.RES ERA3YKD 104V (100 k) | T | 123.2/116.2 |
| R1412 | 7030003200 | S.RES ERJ3GEYJ 100 V (10) | T | 126.4/112.3 |
| R1413 | 7030003200 | S.RES ERJ3GEYJ 100 V (10) | T | 126.4/113.6 |
| R1414 | 7030005871 | S.RES ERA3YKD 104V (100 k) | B | 120.9/114.4 |
| R1415 | 7030010980 | S.RES ERA3YHD 470V (47) | T | 127/114.9 |
| R1416 | 7030003320 | S.RES ERJ3GEYJ 101 V (100) | B | 139.7/122.9 |
| R1417 | 7030000010 | S.RES MCR10EZHJ JPW | B | 130.1/124.5 |
| R1418 | 7030000010 | S.RES MCR10EZHJ JPW | B | 130.1/122.5 |
| R1419 | 7030003860 | S.RES ERJ3GE JPW V | B | 129.4/114.9 |
| R1501 | 7030010980 | S.RES ERA3YHD 470V (47) | T | 126.5/125.2 |
| R1502 | 7030009841 | S.RES ERA3YHD 330V (33) | T | 133/131 |
| R1503 | 7030009851 | S.RES ERA3YED 271V (270) | T | 130/146.3 |
| R1504 | 7030011050 | S.RES ERA3YHD 100V (10) | T | 131.3/143.5 |
| R1505 | 7030006091 | S.RES ERA3YED 822V (8.2 k) | B | 137.7/140.3 |
| R1506 | 7030007230 | S.RES ERA3YED 102V (1 k) | B | 137.7/147 |
| R1507 | 7030007230 | S.RES ERA3YED 102V (1 k) | T | 132.6/146.3 |
| R1508 | 7030007230 | S.RES ERA3YED 102V (1 k) | T | 133.9/146.3 |
| R1509 | 7030007230 | S.RES ERA3YED 102V (1 k) | T | 139.1/158.9 |
| R1510 | 7030005321 | S.RES ERA3YED 103V (10 k) | T | 139.1/157.6 |
| R1511 | 7030009861 | S.RES ERA3YED 471V (470) | T | 136.5/157.6 |
| R1512 | 7030003380 | S.RES ERJ3GEYJ 331 V (330) | T | 129.6/151.6 |
| R1513 | 7030003380 | S.RES ERJ3GEYJ 331 V (330) | T | 129.6/155.5 |
| R1514 | 7030005321 | S.RES ERA3YED 103V (10 k) | T | 129.6/160.8 |
| R1515 | 7030005321 | S.RES ERA3YED 103V (10 k) | T | 133.5/160.8 |
| R1516 | 7310005090 | TRI RH03ADC13X (1 k) | T | 119.2/157.7 |
| R1517 | 7030005321 | S.RES ERA3YED 103V (10 k) | T | 115.3/158 |
| R1518 | 7030005321 | S.RES ERA3YED 103V (10 k) | T | 134.8/160.8 |
| R1519 | 7030005321 | S.RES ERA3YED 103V (10 k) | T | 131.7/171.7 |
| R1520 | 7030005321 | S.RES ERA3YED 103V (10 k) | T | 136.1/160.8 |
| R1521 | 7030010980 | S.RES ERA3YHD 470V (47) | T | 126.5/133 |
| R1522 | 7030009841 | S.RES ERA3YHD 330V (33) | T | 126/141.1 |
| R1523 | 7030009851 | S.RES ERA3YED 271V (270) | T | 123.7/146.3 |
| R1524 | 7030011050 | S.RES ERA3YHD 100V (10) | T | 122.4/143.5 |
| R1525 | 7030007230 | S.RES ERA3YED 102V (1 k) | B | 128.8/147 |
| R1526 | 7030003460 | S.RES ERJ3GEYJ 152 V (1.5 k) | B | 137.7/142.1 |
| R1527 | 7030007230 | S.RES ERA3YED 102V (1 k) | T | 119.8/146.3 |
| R1528 | 7030007230 | S.RES ERA3YED 102V (1 k) | T | 121.1/146.3 |
| R1529 | 7030007230 | S.RES ERA3YED 102V (1 k) | T | 115.3/152.3 |
| R1530 | 7030003380 | S.RES ERJ3GEYJ 331 V (330) | T | 128/151.6 |
| R1531 | 7030003380 | S.RES ERJ3GEYJ 331 V (330) | T | 128/155.5 |
| R1532 | 7030005321 | S.RES ERA3YED 103V (10 k) | T | 124.1/160.8 |
| R1533 | 7030005321 | S.RES ERA3YED 103V (10 k) | T | 128/160.8 |
| R1534 | 7030005321 | S.RES ERA3YED 103V (10 k) | T | 122.8/160.8 |
| R1535 | 7030005321 | S.RES ERA3YED 103V (10 k) | T | 121.5/160.8 |
| R1536 | 7030005321 | S.RES ERA3YED 103V (10 k) | T | 129/171.7 |
| R1537 | 7030003320 | S.RES ERJ3GEYJ 101 V (100) | T | 115.5/164.5 |
| R1538 | 7030003320 | S.RES ERJ3GEYJ 101 V (100) | T | 107.1/170.1 |
| R1539 | 7030008061 | S.RES ERA3YED 222V (2.2 k) | B | 131.8/176.4 |
| R1540 | 7030010390 | S.RES ERA3YED 821V (820) | B | 128.7/177.1 |
| R1541 | 7030003320 | S.RES ERJ3GEYJ 101 V (100) | T | 107.1/178.8 |
| R1542 | 7030003320 | S.RES ERJ3GEYJ 101 V (100) | T | 115.5/173.2 |
| R1543 | 7030009691 | S.RES ERA3YED 101V (100) | B | 130.6/179 |
| R1651 | 7030003380 | S.RES ERJ3GEYJ 331 V (330) | B | 100.9/144.8 |
| R1652 | 7030003220 | S.RES ERJ3GEYJ 150 V (15) | B | 102.7/144.8 |
| R1653 | 7030003380 | S.RES ERJ3GEYJ 331 V (330) | B | 101.9/142.9 |
| R1654 | 7030010980 | S.RES ERA3YHD 470V (47) | B | 105.5/142.2 |
| R1655 | 7030009861 | S.RES ERA3YED 471V (470) | B | 108.8/140 |
| R1656 | 7030003630 | S.RES ERJ3GEYJ 393 V (39 k) | B | 108.3/142.2 |
| R1657 | 7030005871 | S.RES ERA3YKD 104V (100 k) | T | 108/133.1 |
| R1658 | 7030003320 | S.RES ERJ3GEYJ 101 V (100) | T | 110.6/133.1 |
| R1659 | 7030009691 | S.RES ERA3YED 101V (100) | T | 115.8/124.9 |
| R1660 | 7030009691 | S.RES ERA3YED 101V (100) | T | 115.8/128.7 |
| R1661 | 7030005321 | S.RES ERA3YED 103V (10 k) | T | 135.1/175.4 |
| R1662 | 7030005321 | S.RES ERA3YED 103V (10 k) | T | 135.2/172.8 |
| R1663 | 7030005321 | S.RES ERA3YED 103V (10 k) | T | 144.3/175.4 |
| R1664 | 7030005321 | S.RES ERA3YED 103V (10 k) | T | 139.9/172.1 |
| R1665 | 7030003320 | S.RES ERJ3GEYJ 101 V (100) | T | 109.3/133.1 |
| R1667 | 7030003360 | S.RES ERJ3GEYJ 221 V (220) | T | 139.2/170.2 |
| R1668 | 7030003360 | S.RES ERJ3GEYJ 221 V (220) | T | 141.8/170.2 |
| R1670 | 7030003800 | S.RES ERJ3GEYJ 105 V (1 M) | T | 140.2/164.1 |
| R1673 | 7030007230 | S.RES ERA3YED 102V (1 k) | B | 146/174.5 |
| R1674 | 7030009851 | S.RES ERA3YED 271V (270) | B | 145.1/177.1 |
| R1675 | 7030009591 | S.RES ERA3YED 472V (4.7 k) | T | 136.6/170.2 |
| R1677 | 7030009591 | S.RES ERA3YED 472V (4.7 k) | T | 143.1/170.2 |
| R1701 | 7030003360 | S.RES ERJ3GEYJ 221 V (220) | T | 162.4/147.4 |
| R1703 | 7030003360 | S.RES ERJ3GEYJ 221 V (220) | T | 159.8/147.4 |
| R1704 | 7030003360 | S.RES ERJ3GEYJ 221 V (220) | T | 158.5/147.4 |
| R1706 | 7030003360 | S.RES ERJ3GEYJ 221 V (220) | T | 155.9/147.4 |
| R1707 | 7030003360 | S.RES ERJ3GEYJ 221 V (220) | T | 154.6/147.4 |
| R1708 | 7030003360 | S.RES ERJ3GEYJ 221 V (220) | T | 153.3/147.4 |
| R1709 | 7030003480 | S.RES ERJ3GEYJ 222 V (2.2 k) | T | 149.7/159.3 |
| R1710 | 7030003480 | S.RES ERJ3GEYJ 222 V (2.2 k) | T | 148.4/159.3 |

## [RXPLL-A UNIT]

| REF NO. | ORDER NO. | DESCRIPTION | M. | H/V LOCATION |
|---|---|---|---|---|
| R1711 | 7030003540 | S.RES ERJ3GEYJ 682 V (6.8 k) | T | 147.1/159.3 |
| R1712 | 7030003540 | S.RES ERJ3GEYJ 682 V (6.8 k) | T | 145.8/159.3 |
| R1713 | 7030003660 | S.RES ERJ3GEYJ 683 V (68 k) | T | 145.8/157.2 |
| R1714 | 7030003660 | S.RES ERJ3GEYJ 683 V (68 k) | T | 145.8/155.9 |
| R1715 | 7030003540 | S.RES ERJ3GEYJ 682 V (6.8 k) | T | 143.9/164.8 |
| R1716 | 7030007230 | S.RES ERA3YED 102V (1 k) | T | 164.2/164.8 |
| R1717 | 7030007230 | S.RES ERA3YED 102V (1 k) | T | 164.2/163.5 |
| R1718 | 7030007230 | S.RES ERA3YED 102V (1 k) | T | 164.2/162.2 |
| R1719 | 7030003660 | S.RES ERJ3GEYJ 683 V (68 k) | T | 144.3/166.8 |
| | | | | |
| C1 | 4030011600 | S.CER C1608 JB 1E 104K-T | T | 10.8/18.2 |
| C2 | 4030006880 | S.CER C1608 JB 1H 472K-T | T | 25.7/29.5 |
| C14 | 4030006880 | S.CER C1608 JB 1H 472K-T | T | 37.7/12.5 |
| C15 | 4030006880 | S.CER C1608 JB 1H 472K-T | T | 31.2/15.4 |
| C16 | 4030006880 | S.CER C1608 JB 1H 472K-T | T | 35.1/15.4 |
| C17 | 4030006880 | S.CER C1608 JB 1H 472K-T | T | 13.8/12.6 |
| C18 | 4030006880 | S.CER C1608 JB 1H 472K-T | T | 16.8/12.6 |
| C19 | 4030006880 | S.CER C1608 JB 1H 472K-T | T | 29.5/12.6 |
| C20 | 4030006880 | S.CER C1608 JB 1H 472K-T | T | 87.4/127.8 |
| C21 | 4030006880 | S.CER C1608 JB 1H 472K-T | T | 88.7/127.8 |
| C22 | 4030006880 | S.CER C1608 JB 1H 472K-T | T | 90/127.8 |
| C30 | 4030011600 | S.CER C1608 JB 1E 104K-T | T | 19.1/112.4 |
| C31 | 4030011600 | S.CER C1608 JB 1E 104K-T | T | 20.4/113.7 |
| C32 | 4030011600 | S.CER C1608 JB 1E 104K-T | T | 24.3/111.1 |
| C51 | 4510008520 | S.ELE EEE1CA470SP | T | 84/20.3 |
| C52 | 4030011600 | S.CER C1608 JB 1E 104K-T | T | 78.9/23.7 |
| C53 | 4030011600 | S.CER C1608 JB 1E 104K-T | T | 75.1/23.7 |
| C54 | 4510008500 | S.ELE EEE1CA101WP | T | 70/20.3 |
| C61 | 4510008520 | S.ELE EEE1CA470SP | T | 62.9/20.3 |
| C62 | 4030011600 | S.CER C1608 JB 1E 104K-T | B | 58.2/19.9 |
| C63 | 4030011600 | S.CER C1608 JB 1E 104K-T | B | 54.8/19.9 |
| C64 | 4510008500 | S.ELE EEE1CA101WP | T | 50.1/20.3 |
| C101 | 4030006880 | S.CER C1608 JB 1H 472K-T | T | 39.7/80.7 |
| C102 | 4030011600 | S.CER C1608 JB 1E 104K-T | T | 41.8/79.9 |
| C103 | 4510008540 | S.ELE EEE1CA100SR | T | 40.2/76.8 |
| C104 | 4030011600 | S.CER C1608 JB 1E 104K-T | T | 21.4/100.2 |
| C105 | 4030011600 | S.CER C1608 JB 1E 104K-T | T | 21.4/88.2 |
| C106 | 4030011600 | S.CER C1608 JB 1E 104K-T | T | 21.4/84.4 |
| C107 | 4030011600 | S.CER C1608 JB 1E 104K-T | T | 24.4/79.8 |
| C108 | 4030011600 | S.CER C1608 JB 1E 104K-T | T | 27/79.8 |
| C109 | 4030011600 | S.CER C1608 JB 1E 104K-T | T | 30.8/79.8 |
| C110 | 4030011600 | S.CER C1608 JB 1E 104K-T | T | 36.8/79.8 |
| C111 | 4030011600 | S.CER C1608 JB 1E 104K-T | T | 41.2/88.5 |
| C112 | 4030011600 | S.CER C1608 JB 1E 104K-T | T | 41.3/82.6 |
| C114 | 4030011600 | S.CER C1608 JB 1E 104K-T | T | 39.5/98.4 |
| C115 | 4030011600 | S.CER C1608 JB 1E 104K-T | T | 38.1/98.4 |
| C116 | 4030011600 | S.CER C1608 JB 1E 104K-T | T | 35.3/99.6 |
| C117 | 4030011600 | S.CER C1608 JB 1E 104K-T | T | 23.3/98.8 |
| C118 | 4030011600 | S.CER C1608 JB 1E 104K-T | T | 42.6/82.6 |
| C119 | 4030011600 | S.CER C1608 JB 1E 104K-T | B | 31.2/86.7 |
| C120 | 4030006880 | S.CER C1608 JB 1H 472K-T | T | 36.7/101.5 |
| C121 | 4030011600 | S.CER C1608 JB 1E 104K-T | T | 39.5/101.5 |
| C125 | 4030011600 | S.CER C1608 JB 1E 104K-T | T | 14.6/83.1 |
| C129 | 4030011600 | S.CER C1608 JB 1E 104K-T | T | 33.4/79.8 |
| C130 | 4030017810 | S.CER C1608 CH 1H 102J-T | B | 47.6/106.6 |
| C131 | 4030011600 | S.CER C1608 JB 1E 104K-T | T | 30.4/73.2 |
| C132 | 4030011600 | S.CER C1608 JB 1E 104K-T | T | 35.5/73.2 |
| C133 | 4030006880 | S.CER C1608 JB 1H 472K-T | B | 43.5/98.6 |
| C134 | 4030006880 | S.CER C1608 JB 1H 472K-T | B | 43.5/96.8 |
| C135 | 4030006880 | S.CER C1608 JB 1H 472K-T | T | 46/95.5 |
| C136 | 4030006880 | S.CER C1608 JB 1H 472K-T | T | 46/94.2 |
| C137 | 4030006880 | S.CER C1608 JB 1H 472K-T | T | 46/90.3 |
| C138 | 4030006880 | S.CER C1608 JB 1H 472K-T | T | 46.1/87.7 |
| C139 | 4030006880 | S.CER C1608 JB 1H 472K-T | B | 43.5/100.4 |
| C140 | 4030006880 | S.CER C1608 JB 1H 472K-T | B | 43.5/102.2 |
| C141 | 4030004740 | S.CER C2012 JB 1H 472K-T | B | 34.3/85.1 |
| C142 | 4550007470 | S.TAN F931A107MNMBMA | B | 19.4/87.4 |
| C150 | 4340000050 | S.MLR ECH-U 1C472JB5 | T | 16.3/64.6 |
| C151 | 4550007520 | S.TAN F931A106MAABMA | B | 38.6/92.1 |
| C152 | 4030007070 | S.CER C1608 CH 1H 330J-T | T | 19.2/59.9 |
| C153 | 4030009910 | S.CER C1608 CH 1H 040B-T | T | 21.3/55.4 |
| C154 | 4610001850 | S.TRI TZB4R200AB10R00 | T | 17.6/55.1 |
| C155 | 4030016550 | S.CER CM105 CH 151G 50AT | T | 24.1/55.4 |
| C156 | 4030016550 | S.CER CM105 CH 151G 50AT | T | 26.9/55.4 |
| C157 | 4030016550 | S.CER CM105 CH 151G 50AT | T | 26.9/56.7 |
| C158 | 4030006880 | S.CER C1608 JB 1H 472K-T | T | 23.3/53.1 |
| C159 | 4030006880 | S.CER C1608 JB 1H 472K-T | B | 23/51.9 |
| C161 | 4510008540 | S.ELE EEE1CA100SR | T | 31.3/61 |
| C162 | 4030009920 | S.CER C1608 CH 1H 050B-T | B | 33.6/53 |
| C163 | 4030011600 | S.CER C1608 JB 1E 104K-T | B | 36.9/59.6 |
| C164 | 4030006880 | S.CER C1608 JB 1H 472K-T | B | 30.3/54.8 |
| C165 | 4030006880 | S.CER C1608 JB 1H 472K-T | B | 30.8/74 |
| C166 | 4030011600 | S.CER C1608 JB 1E 104K-T | B | 34.9/78.2 |
| C167 | 4030006880 | S.CER C1608 JB 1H 472K-T | B | 37.4/74 |
| C201 | 4030011340 | S.CER C1608 CH 1H 471J-T | T | 33.8/40.4 |
| C202 | 4510009280 | S.ELE EEE1EA4R7SR | T | 26.5/44 |
| C203 | 4030006900 | S.CER C1608 JB 1H 103K-T | T | 32.5/38.3 |
| C204 | 4030006880 | S.CER C1608 JB 1H 472K-T | T | 25.4/35.3 |
| C205 | 4030006880 | S.CER C1608 JB 1H 472K-T | T | 25.4/34 |
| C206 | 4030006880 | S.CER C1608 JB 1H 472K-T | T | 31.1/43 |
| C207 | 4030007030 | S.CER C1608 CH 1H 150J-T | B | 46.8/32.4 |

M.=Mounted side (T: Mounted on the Top side, B: Mounted on the Bottom side)
S.=Surface mount

## [RXPLL-A UNIT]

| REF NO. | ORDER NO. | DESCRIPTION | M. | H/V LOCATION |
|---|---|---|---|---|
| C208 | 4030007030 | S.CER C1608 CH 1H 150J-T | T | 32.5/41 |
| C209 | 4030011340 | S.CER C1608 CH 1H 471J-T | T | 44.1/26.1 |
| C210 | 4550007620 | S.TAN F931V224MAABMA | T | 46.2/26.7 |
| C211 | 4550007300 | S.TAN F931A335MAABMA | B | 46.1/41.6 |
| C219 | 4030006880 | S.CER C1608 JB 1H 472K-T | T | 33.8/37.8 |
| C220 | 4030007130 | S.CER C1608 CH 1H 101J-T | T | 54.7/37.6 |
| C221 | 4030009520 | S.CER C1608 CH 1H 020B-T | T | 54.7/32 |
| C222 | 4610001860 | S.TRI TZB4Z060AB10R00 | T | 68.1/32.6 |
| C223 | 4030007080 | S.CER C1608 CH 1H 390J-T | T | 73.2/36.3 |
| C224 | 4030007010 | S.CER C1608 CH 1H 100D-T | T | 73.2/38.9 |
| C225 | 4030007050 | S.CER C1608 CH 1H 220J-T | T | 73.6/30.9 |
| C226 | 4030006880 | S.CER C1608 JB 1H 472K-T | T | 71/30.9 |
| C227 | 4030009920 | S.CER C1608 CH 1H 050B-T | T | 75.1/32.6 |
| C228 | 4510008540 | S.ELE EEE1CA100SR | T | 68.8/37.8 |
| C229 | 4030009530 | S.CER C1608 CH 1H 030B-T | T | 77.8/32.6 |
| C230 | 4030007100 | S.CER C1608 CH 1H 560J-T | T | 54.7/50 |
| C231 | 4030009510 | S.CER C1608 CH 1H 010B-T | T | 54.7/44.6 |
| C232 | 4610001860 | S.TRI TZB4Z060AB10R00 | T | 68.1/45.1 |
| C233 | 4030007070 | S.CER C1608 CH 1H 330J-T | T | 73.2/48.8 |
| C234 | 4030009920 | S.CER C1608 CH 1H 050B-T | T | 73.2/51.4 |
| C235 | 4030007020 | S.CER C1608 CH 1H 120J-T | T | 73.6/43.3 |
| C236 | 4030006880 | S.CER C1608 JB 1H 472K-T | T | 71/43.3 |
| C237 | 4030009910 | S.CER C1608 CH 1H 040B-T | T | 75.1/45 |
| C238 | 4510008540 | S.ELE EEE1CA100SR | T | 68.8/50.3 |
| C239 | 4030009910 | S.CER C1608 CH 1H 040B-T | T | 77.8/45 |
| C240 | 4030007080 | S.CER C1608 CH 1H 390J-T | T | 54.7/62.5 |
| C241 | 4030009510 | S.CER C1608 CH 1H 010B-T | T | 54.7/57.1 |
| C242 | 4610001860 | S.TRI TZB4Z060AB10R00 | T | 68.1/57.6 |
| C243 | 4030007060 | S.CER C1608 CH 1H 270J-T | T | 73.2/61.3 |
| C244 | 4030009910 | S.CER C1608 CH 1H 040B-T | T | 73.2/63.9 |
| C245 | 4030009920 | S.CER C1608 CH 1H 050B-T | T | 73.6/55.8 |
| C246 | 4030006880 | S.CER C1608 JB 1H 472K-T | T | 71/55.9 |
| C247 | 4030009530 | S.CER C1608 CH 1H 030B-T | T | 75.1/57.5 |
| C248 | 4510008540 | S.ELE EEE1CA100SR | T | 68.8/62.9 |
| C250 | 4030007100 | S.CER C1608 CH 1H 560J-T | T | 54.7/75 |
| C251 | 4030009540 | S.CER C1608 CH 1H 1R5B-T | T | 54.7/69.6 |
| C252 | 4610001810 | S.TRI TZB4Z030AB10R00 | T | 68.1/70.1 |
| C253 | 4030007080 | S.CER C1608 CH 1H 390J-T | T | 73.2/73.8 |
| C254 | 4030009530 | S.CER C1608 CH 1H 030B-T | T | 73.2/76.4 |
| C255 | 4030006990 | S.CER C1608 CH 1H 080D-T | T | 73.6/68.4 |
| C256 | 4030006880 | S.CER C1608 JB 1H 472K-T | T | 71/68.4 |
| C257 | 4030007010 | S.CER C1608 CH 1H 100D-T | T | 75.1/70 |
| C258 | 4510008540 | S.ELE EEE1CA100SR | T | 68.8/75.4 |
| C260 | 4030007110 | S.CER C1608 CH 1H 680J-T | T | 54.7/87.5 |
| C262 | 4610001810 | S.TRI TZB4Z030AB10R00 | T | 68.1/82.6 |
| C263 | 4030007080 | S.CER C1608 CH 1H 390J-T | T | 73.2/86.3 |
| C264 | 4030009530 | S.CER C1608 CH 1H 030B-T | T | 73.2/88.9 |
| C265 | 4030011770 | S.CER C1608 CH 1H 060B-T | T | 73.6/80.9 |
| C266 | 4030006880 | S.CER C1608 JB 1H 472K-T | T | 71/80.9 |
| C267 | 4030007010 | S.CER C1608 CH 1H 100D-T | T | 75.1/82.5 |
| C268 | 4510008540 | S.ELE EEE1CA100SR | T | 68.8/87.9 |
| C272 | 4610001860 | S.TRI TZB4Z060AB10R00 | T | 68.1/95.1 |
| C273 | 4030007050 | S.CER C1608 CH 1H 220J-T | T | 73.2/98.2 |
| C274 | 4030009530 | S.CER C1608 CH 1H 030B-T | T | 73.2/100.8 |
| C275 | 4030009920 | S.CER C1608 CH 1H 050B-T | T | 73.6/92.8 |
| C276 | 4030006880 | S.CER C1608 JB 1H 472K-T | T | 71/92.8 |
| C277 | 4030007010 | S.CER C1608 CH 1H 100D-T | T | 75.1/95 |
| C278 | 4510008540 | S.ELE EEE1CA100SR | T | 68.8/100.4 |
| C283 | 4030017810 | S.CER C1608 CH 1H 102J-T | T | 82.1/36.3 |
| C284 | 4030006880 | S.CER C1608 JB 1H 472K-T | T | 84.5/34.3 |
| C285 | 4030017810 | S.CER C1608 CH 1H 102J-T | T | 82.1/48.8 |
| C286 | 4030006880 | S.CER C1608 JB 1H 472K-T | T | 84.5/46.9 |
| C287 | 4030017810 | S.CER C1608 CH 1H 102J-T | T | 82.1/61.3 |
| C288 | 4030006880 | S.CER C1608 JB 1H 472K-T | T | 83.9/57.5 |
| C289 | 4030017810 | S.CER C1608 CH 1H 102J-T | T | 82.1/73.8 |
| C290 | 4030006880 | S.CER C1608 JB 1H 472K-T | T | 84.3/70.4 |
| C291 | 4030017810 | S.CER C1608 CH 1H 102J-T | T | 82.1/86.3 |
| C292 | 4030006880 | S.CER C1608 JB 1H 472K-T | T | 84.4/84.4 |
| C293 | 4030017810 | S.CER C1608 CH 1H 102J-T | T | 82.1/98.7 |
| C294 | 4030006880 | S.CER C1608 JB 1H 472K-T | T | 83.2/93.9 |
| C297 | 4030009920 | S.CER C1608 CH 1H 050B-T | T | 52.6/59.4 |
| C299 | 4030007050 | S.CER C1608 CH 1H 220J-T | T | 52.6/84.4 |
| C301 | 4030006880 | S.CER C1608 JB 1H 472K-T | T | 89.3/30.6 |
| C302 | 4030006880 | S.CER C1608 JB 1H 472K-T | T | 94.9/28 |
| C303 | 4030006880 | S.CER C1608 JB 1H 472K-T | B | 92.6/39.8 |
| C304 | 4030006880 | S.CER C1608 JB 1H 472K-T | B | 92.6/45.2 |
| C305 | 4030006880 | S.CER C1608 JB 1H 472K-T | B | 89.1/48.8 |
| C306 | 4030006880 | S.CER C1608 JB 1H 472K-T | B | 89.1/50.6 |
| C309 | 4030017810 | S.CER C1608 CH 1H 102J-T | T | 94.9/42.7 |
| C310 | 4030011600 | S.CER C1608 JB 1E 104K-T | T | 92.8/42.1 |
| C311 | 4510008520 | S.ELE EEE1CA470SP | T | 93.4/47.4 |
| C312 | 4030006880 | S.CER C1608 JB 1H 472K-T | B | 89/27.4 |
| C313 | 4030006880 | S.CER C1608 JB 1H 472K-T | B | 93.7/23.1 |
| C331 | 4030007110 | S.CER C1608 CH 1H 680J-T | T | 89.3/32.2 |
| C332 | 4030007160 | S.CER C1608 CH 1H 181J-T | T | 92.1/33.5 |
| C333 | 4030007110 | S.CER C1608 CH 1H 680J-T | T | 89.3/33.5 |
| C334 | 4030007050 | S.CER C1608 CH 1H 220J-T | T | 94.9/36 |
| C335 | 4030006980 | S.CER C1608 CH 1H 070D-T | T | 94.9/37.4 |
| C336 | 4030007030 | S.CER C1608 CH 1H 150J-T | T | 92.1/38.8 |
| C337 | 4030007050 | S.CER C1608 CH 1H 220J-T | T | 94.9/38.8 |
| C341 | 4030006880 | S.CER C1608 JB 1H 472K-T | T | 94.9/40.1 |
| C342 | 4030006880 | S.CER C1608 JB 1H 472K-T | T | 86.5/33.5 |

## [RXPLL-A UNIT]

| REF NO. | ORDER NO. | DESCRIPTION | M. | H/V LOCATION |
|---|---|---|---|---|
| C344 | 4030011600 | S.CER C1608 JB 1E 104K-T | T | 94.9/41.4 |
| C351 | 4030017810 | S.CER C1608 CH 1H 102J-T | T | 94.9/61.6 |
| C352 | 4030011600 | S.CER C1608 JB 1E 104K-T | T | 94.9/62.9 |
| C353 | 4510008520 | S.ELE EEE1CA470SP | T | 93.4/67.1 |
| C354 | 4030006880 | S.CER C1608 JB 1H 472K-T | T | 89.3/51.7 |
| C355 | 4030006880 | S.CER C1608 JB 1H 472K-T | T | 94.9/55.1 |
| C356 | 4030006880 | S.CER C1608 JB 1H 472K-T | T | 89.2/58.4 |
| C357 | 4030006880 | S.CER C1608 JB 1H 472K-T | T | 94.9/57.7 |
| C358 | 4030006880 | S.CER C1608 JB 1H 472K-T | B | 89.2/60.3 |
| C359 | 4030006880 | S.CER C1608 JB 1H 472K-T | B | 92.6/62.1 |
| C360 | 4030006880 | S.CER C1608 JB 1H 472K-T | B | 89.9/66.9 |
| C361 | 4030006880 | S.CER C1608 JB 1H 472K-T | T | 89.3/83.4 |
| C363 | 4030006880 | S.CER C1608 JB 1H 472K-T | T | 86.1/60.9 |
| C364 | 4030017810 | S.CER C1608 CH 1H 102J-T | T | 86.7/52.3 |
| C365 | 4030006880 | S.CER C1608 JB 1H 472K-T | T | 90.3/59.9 |
| C421 | 4030006880 | S.CER C1608 JB 1H 472K-T | T | 94.1/88.5 |
| C422 | 4030006880 | S.CER C1608 JB 1H 472K-T | T | 87.3/88.5 |
| C423 | 4030006880 | S.CER C1608 JB 1H 472K-T | T | 94.1/93.3 |
| C424 | 4030006880 | S.CER C1608 JB 1H 472K-T | T | 87.9/93.3 |
| C425 | 4030006880 | S.CER C1608 JB 1H 472K-T | T | 92.8/93.3 |
| C426 | 4030006880 | S.CER C1608 JB 1H 472K-T | B | 94.6/87.3 |
| C427 | 4030006880 | S.CER C1608 JB 1H 472K-T | T | 92.1/86.5 |
| C428 | 4030006880 | S.CER C1608 JB 1H 472K-T | T | 89.3/86.5 |
| C441 | 4030007040 | S.CER C1608 CH 1H 180J-T | T | 94.9/71.3 |
| C442 | 4030007040 | S.CER C1608 CH 1H 180J-T | T | 94.9/72.6 |
| C443 | 4030007020 | S.CER C1608 CH 1H 120J-T | T | 92.1/74.2 |
| C444 | 4030007080 | S.CER C1608 CH 1H 390J-T | T | 94.9/73.9 |
| C445 | 4030011770 | S.CER C1608 CH 1H 060B-T | T | 94.9/75.2 |
| C446 | 4030007060 | S.CER C1608 CH 1H 270J-T | T | 94.9/79.1 |
| C447 | 4030007110 | S.CER C1608 CH 1H 680J-T | T | 92.8/78.9 |
| C448 | 4030006880 | S.CER C1608 JB 1H 472K-T | T | 94.9/76.5 |
| C449 | 4030006880 | S.CER C1608 JB 1H 472K-T | T | 88.1/69.1 |
| C451 | 4030007110 | S.CER C1608 CH 1H 680J-T | T | 92/82.1 |
| C452 | 4030007160 | S.CER C1608 CH 1H 181J-T | T | 92/80.8 |
| C453 | 4030011600 | S.CER C1608 JB 1E 104K-T | T | 94.9/77.8 |
| C501 | 4030006880 | S.CER C1608 JB 1H 472K-T | T | 38.9/131.2 |
| C502 | 4030011600 | S.CER C1608 JB 1E 104K-T | T | 38.9/129.9 |
| C503 | 4510008540 | S.ELE EEE1CA100SR | T | 36.6/126.7 |
| C504 | 4030011600 | S.CER C1608 JB 1E 104K-T | T | 21.4/153.1 |
| C505 | 4550007470 | S.TAN F931A107MNMBMA | B | 19.2/140.3 |
| C506 | 4030011600 | S.CER C1608 JB 1E 104K-T | T | 21.4/141 |
| C507 | 4030011600 | S.CER C1608 JB 1E 104K-T | T | 21.4/137.1 |
| C509 | 4030011600 | S.CER C1608 JB 1E 104K-T | T | 25.8/132.6 |
| C510 | 4030011600 | S.CER C1608 JB 1E 104K-T | T | 28.4/132.6 |
| C511 | 4030011600 | S.CER C1608 JB 1E 104K-T | T | 32.2/132.6 |
| C512 | 4030011600 | S.CER C1608 JB 1E 104K-T | T | 34.8/132.6 |
| C513 | 4030011600 | S.CER C1608 JB 1E 104K-T | T | 37.4/132.6 |
| C514 | 4030011600 | S.CER C1608 JB 1E 104K-T | T | 41.2/136 |
| C515 | 4030011600 | S.CER C1608 JB 1E 104K-T | T | 41.3/139.7 |
| C516 | 4030011600 | S.CER C1608 JB 1E 104K-T | T | 41.3/142.3 |
| C517 | 4030011600 | S.CER C1608 JB 1E 104K-T | T | 37.6/151.8 |
| C518 | 4030011600 | S.CER C1608 JB 1E 104K-T | T | 34.8/151.8 |
| C519 | 4030011600 | S.CER C1608 JB 1E 104K-T | T | 31.2/151.8 |
| C520 | 4030011600 | S.CER C1608 JB 1E 104K-T | T | 23.3/151.9 |
| C521 | 4030011600 | S.CER C1608 JB 1E 104K-T | T | 41.6/134 |
| C522 | 4550007220 | S.TAN F931A476MCMBMA | B | 40.7/145 |
| C525 | 4030006880 | S.CER C1608 JB 1H 472K-T | T | 35.3/154.5 |
| C526 | 4030011600 | S.CER C1608 JB 1E 104K-T | T | 36.6/154.5 |
| C531 | 4030006880 | S.CER C1608 JB 1H 472K-T | T | 14.6/137.5 |
| C532 | 4030007070 | S.CER C1608 CH 1H 330J-T | T | 17.2/137.5 |
| C533 | 4030007110 | S.CER C1608 CH 1H 680J-T | T | 17.3/133.4 |
| C534 | 4030007110 | S.CER C1608 CH 1H 680J-T | T | 16.8/130.1 |
| C535 | 4030007070 | S.CER C1608 CH 1H 330J-T | T | 18.1/127 |
| C536 | 4030006880 | S.CER C1608 JB 1H 472K-T | T | 20.9/127.6 |
| C537 | 4030006880 | S.CER C1608 JB 1H 472K-T | T | 27.2/126.4 |
| C540 | 4030006880 | S.CER C1608 JB 1H 472K-T | B | 56.3/142.8 |
| C541 | 4510008540 | S.ELE EEE1CA100SR | T | 51/139.3 |
| C542 | 4340000260 | S.MLR ECPU1C104MA5 | B | 47.8/128.7 |
| C543 | 4030007060 | S.CER C1608 CH 1H 270J-T | T | 62.2/136.4 |
| C545 | 4030008560 | S.CER C1608 CH 1H 300J-T | T | 70/137.1 |
| C546 | 4610001830 | S.TRI TZB4S100AB10R00 | T | 65.8/138.7 |
| C547 | 4030007130 | S.CER C1608 CH 1H 101J-T | T | 71.3/137.1 |
| C548 | 4030007010 | S.CER C1608 CH 1H 100D-T | T | 71.3/139.9 |
| C549 | 4030007050 | S.CER C1608 CH 1H 220J-T | T | 68.9/145.1 |
| C550 | 4030006880 | S.CER C1608 JB 1H 472K-T | T | 66.3/143 |
| C551 | 4030009520 | S.CER C1608 CH 1H 020B-T | T | 71.3/142.8 |
| C552 | 4030017810 | S.CER C1608 CH 1H 102J-T | B | 54.6/139.5 |
| C553 | 4030006880 | S.CER C1608 JB 1H 472K-T | B | 56.3/139.5 |
| C554 | 4510008500 | S.ELE EEE1CA101WP | T | 50.9/146.6 |
| C555 | 4030006880 | S.CER C1608 JB 1H 472K-T | B | 47.7/149.5 |
| C556 | 4550007220 | S.TAN F931A476MCMBMA | B | 76.4/136.1 |
| C558 | 4550007520 | S.TAN F931A106MAABMA | B | 43.4/132.5 |
| C559 | 4550007400 | S.TAN F931A225MAABMA | B | 43.4/129.9 |
| C561 | 4550007520 | S.TAN F931A106MAABMA | T | 70/157.5 |
| C562 | 4030006880 | S.CER C1608 JB 1H 472K-T | T | 68.3/155.5 |
| C563 | 4030017810 | S.CER C1608 CH 1H 102J-T | B | 60.1/158 |
| C564 | 4030006880 | S.CER C1608 JB 1H 472K-T | B | 58.8/158 |
| C565 | 4510008520 | S.ELE EEE1CA470SP | T | 50.9/155.6 |
| C566 | 4030006880 | S.CER C1608 JB 1H 472K-T | T | 64.4/155.5 |
| C571 | 4030006880 | S.CER C1608 JB 1H 472K-T | B | 58.5/161.3 |
| C573 | 4030007040 | S.CER C1608 CH 1H 180J-T | B | 72.5/166.8 |
| C574 | 4030009510 | S.CER C1608 CH 1H 010B-T | T | 72.6/169.1 |

M.=Mounted side (T: Mounted on the Top side, B: Mounted on the Bottom side)
S.=Surface mount

## [RXPLL-A UNIT]

| REF NO. | ORDER NO. | DESCRIPTION | M. | H/V LOCATION |
|---|---|---|---|---|
| C575 | 4030007040 | S.CER C1608 CH 1H 180J-T | T | 72.6/171.9 |
| C580 | 4030006880 | S.CER C1608 JB 1H 472K-T | T | 41.9/152.4 |
| C581 | 4030006880 | S.CER C1608 JB 1H 472K-T | T | 41.9/144.2 |
| C591 | 4030006880 | S.CER C1608 JB 1H 472K-T | T | 63.5/171.2 |
| C592 | 4030007060 | S.CER C1608 CH 1H 270J-T | T | 62.8/163.1 |
| C593 | 4510008540 | S.ELE EEE1CA100SR | T | 54.4/170.7 |
| C594 | 4030006880 | S.CER C1608 JB 1H 472K-T | T | 57.4/171.9 |
| C596 | 4030006880 | S.CER C1608 JB 1H 472K-T | B | 63.7/168.1 |
| C597 | 4030007050 | S.CER C1608 CH 1H 220J-T | T | 62.2/171.2 |
| C604 | 4030011600 | S.CER C1608 JB 1E 104K-T | B | 50.6/111 |
| C605 | 4510008540 | S.ELE EEE1CA100SR | T | 52.5/110.9 |
| C651 | 4030006880 | S.CER C1608 JB 1H 472K-T | T | 13.5/174 |
| C652 | 4030011600 | S.CER C1608 JB 1E 104K-T | T | 12.9/176.3 |
| C653 | 4510008540 | S.ELE EEE1CA100SR | T | 6.8/172.6 |
| C654 | 4030011600 | S.CER C1608 JB 1E 104K-T | T | 22.8/161.4 |
| C655 | 4030011600 | S.CER C1608 JB 1E 104K-T | T | 25.9/161.4 |
| C656 | 4030011600 | S.CER C1608 JB 1E 104K-T | T | 25.8/177.1 |
| C657 | 4030011600 | S.CER C1608 JB 1E 104K-T | T | 22.7/177.1 |
| C658 | 4030011600 | S.CER C1608 JB 1E 104K-T | T | 13.5/172.7 |
| C659 | 4030011600 | S.CER C1608 JB 1E 104K-T | T | 16.5/163.4 |
| C660 | 4030006880 | S.CER C1608 JB 1H 472K-T | T | 17.6/161.4 |
| C661 | 4030011600 | S.CER C1608 JB 1E 104K-T | T | 13.5/166.9 |
| C662 | 4550007220 | S.TAN F931A476MCMBMA | B | 30.5/169.4 |
| C680 | 4030006880 | S.CER C1608 JB 1H 472K-T | T | 34.3/177.1 |
| C681 | 4030011340 | S.CER C1608 CH 1H 471J-T | T | 40.3/177.1 |
| C682 | 4030007120 | S.CER C1608 CH 1H 820J-T | T | 39.6/175.2 |
| C683 | 4030017870 | S.CER C1608 CH 1H 681J-T | T | 40.9/175.2 |
| C684 | 4030007070 | S.CER C1608 CH 1H 330J-T | B | 39.3/174 |
| C685 | 4030017800 | S.CER C1608 CH 1H 561J-T | B | 42.3/172.6 |
| C686 | 4030011280 | S.CER C1608 CH 1H 271J-T | B | 39.3/170.6 |
| C687 | 4030017810 | S.CER C1608 CH 1H 102J-T | T | 41/169.7 |
| C688 | 4030011280 | S.CER C1608 CH 1H 271J-T | B | 37.5/169.7 |
| C689 | 4030011600 | S.CER C1608 JB 1E 104K-T | T | 37.4/166.4 |
| C690 | 4030011600 | S.CER C1608 JB 1E 104K-T | T | 37.4/161.3 |
| C691 | 4030011600 | S.CER C1608 JB 1E 104K-T | T | 46.4/164 |
| C692 | 4030006880 | S.CER C1608 JB 1H 472K-T | T | 40.3/162.1 |
| C693 | 4030006880 | S.CER C1608 JB 1H 472K-T | B | 58.4/169.6 |
| C694 | 4030006880 | S.CER C1608 JB 1H 472K-T | B | 58.4/164.2 |
| C703 | 4030017810 | S.CER C1608 CH 1H 102J-T | T | 24.3/116.6 |
| C704 | 4030006880 | S.CER C1608 JB 1H 472K-T | T | 23/116.6 |
| C705 | 4510008500 | S.ELE EEE1CA101WP | T | 29.4/118.7 |
| C707 | 4030011600 | S.CER C1608 JB 1E 104K-T | T | 32.1/113.7 |
| C708 | 4030011600 | S.CER C1608 JB 1E 104K-T | T | 32.1/108.1 |
| C709 | 4030007070 | S.CER C1608 CH 1H 330J-T | T | 38.8/112.9 |
| C710 | 4030006880 | S.CER C1608 JB 1H 472K-T | T | 36.2/112.9 |
| C711 | 4030009540 | S.CER C1608 CH 1H 1R5B-T | B | 39.3/113.6 |
| C712 | 4030007070 | S.CER C1608 CH 1H 330J-T | T | 36.2/114.2 |
| C713 | 4030006880 | S.CER C1608 JB 1H 472K-T | T | 42/118.8 |
| C801 | 4030006880 | S.CER C1608 JB 1H 472K-T | T | 58.5/157.6 |
| C802 | 4030007030 | S.CER C1608 CH 1H 150J-T | T | 83.2/149.5 |
| C803 | 4030006900 | S.CER C1608 JB 1H 103K-T | T | 80.9/147.3 |
| C811 | 4030011600 | S.CER C1608 JB 1E 104K-T | T | 44.5/165.9 |
| C812 | 4030011600 | S.CER C1608 JB 1E 104K-T | T | 79.6/177.6 |
| C813 | 4030017800 | S.CER C1608 CH 1H 561J-T | B | 78.9/175.6 |
| C831 | 4030009910 | S.CER C1608 CH 1H 040B-T | T | 91.6/167.3 |
| C832 | 4030009510 | S.CER C1608 CH 1H 010B-T | T | 91.6/157 |
| C834 | 4030007030 | S.CER C1608 CH 1H 150J-T | T | 91.6/154.4 |
| C835 | 4030006900 | S.CER C1608 JB 1H 103K-T | T | 94.4/154.4 |
| C836 | 4510008540 | S.ELE EEE1CA100SR | T | 77.2/169.6 |
| C837 | 4030006880 | S.CER C1608 JB 1H 472K-T | T | 74.5/165.8 |
| C838 | 4030007020 | S.CER C1608 CH 1H 120J-T | T | 95/160 |
| C1000 | 4030007050 | S.CER C1608 CH 1H 220J-T | B | 177.1/13.8 |
| C1001 | 4030007170 | S.CER C1608 CH 1H 221J-T | T | 177.8/69.5 |
| C1002 | 4030006880 | S.CER C1608 JB 1H 472K-T | B | 153.1/16.2 |
| C1003 | 4030012600 | S.CER C2012 JB 1A 105M-T | T | 157.4/8.2 |
| C1004 | 4030011600 | S.CER C1608 JB 1E 104K-T | B | 169.6/8.7 |
| C1005 | 4030011600 | S.CER C1608 JB 1E 104K-T | T | 162.8/17.2 |
| C1006 | 4030010210 | S.CER C3216 JB 1C 105M-T | T | 173.8/18.6 |
| C1007 | 4030006880 | S.CER C1608 JB 1H 472K-T | T | 172.4/23.9 |
| C1008 | 4030006880 | S.CER C1608 JB 1H 472K-T | T | 160/24 |
| C1009 | 4030006880 | S.CER C1608 JB 1H 472K-T | T | 147.6/23.8 |
| C1010 | 4030012600 | S.CER C2012 JB 1A 105M-T | T | 154.5/28.9 |
| C1011 | 4030012600 | S.CER C2012 JB 1A 105M-T | T | 144.2/29.3 |
| C1012 | 4030010210 | S.CER C3216 JB 1C 105M-T | T | 144.8/40.2 |
| C1013 | 4030012600 | S.CER C2012 JB 1A 105M-T | T | 144.2/33.2 |
| C1014 | 4030018810 | S.CER C3216 CH 1H 333J-T | B | 151.6/48.3 |
| C1015 | 4030012600 | S.CER C2012 JB 1A 105M-T | T | 163.6/13.8 |
| C1016 | 4030012600 | S.CER C2012 JB 1A 105M-T | T | 173.6/33.2 |
| C1017 | 4030012600 | S.CER C2012 JB 1A 105M-T | T | 163.3/33.2 |
| C1020 | 4030012600 | S.CER C2012 JB 1A 105M-T | B | 170/38.6 |
| C1021 | 4030012600 | S.CER C2012 JB 1A 105M-T | B | 154/38.6 |
| C1024 | 4030010210 | S.CER C3216 JB 1C 105M-T | B | 170.5/45.5 |
| C1025 | 4030010210 | S.CER C3216 JB 1C 105M-T | B | 154.7/45.5 |
| C1026 | 4030010210 | S.CER C3216 JB 1C 105M-T | T | 171.4/52.7 |
| C1027 | 4030010210 | S.CER C3216 JB 1C 105M-T | T | 165.6/52.7 |
| C1028 | 4030006880 | S.CER C1608 JB 1H 472K-T | B | 156.4/65.4 |
| C1029 | 4030006880 | S.CER C1608 JB 1H 472K-T | T | 168.5/65.4 |
| C1030 | 4030010210 | S.CER C3216 JB 1C 105M-T | T | 164.5/18 |
| C1031 | 4030012600 | S.CER C2012 JB 1A 105M-T | B | 169.2/10.8 |
| C1032 | 4030011600 | S.CER C1608 JB 1E 104K-T | B | 183.5/65 |
| C1033 | 4550006470 | S.TAN TEESVB2 1D 106M8R | B | 146.5/47.7 |
| C1034 | 4550006470 | S.TAN TEESVB2 1D 106M8R | B | 174/52.1 |

## [RXPLL-A UNIT]

| REF NO. | ORDER NO. | DESCRIPTION | M. | H/V LOCATION |
|---|---|---|---|---|
| C1035 | 4550006470 | S.TAN TEESVB2 1D 106M8R | B | 164.6/15.8 |
| C1036 | 4030007120 | S.CER C1608 CH 1H 820J-T | T | 160.2/12.7 |
| C1037 | 4030007090 | S.CER C1608 CH 1H 470J-T | B | 149.3/49.3 |
| C1038 | 4030017810 | S.CER C1608 CH 1H 102J-T | T | 146.6/26.2 |
| C1039 | 4030017810 | S.CER C1608 CH 1H 102J-T | T | 146.5/41 |
| C1040 | 4030017810 | S.CER C1608 CH 1H 102J-T | T | 145.3/36.4 |
| C1041 | 4030006990 | S.CER C1608 CH 1H 080D-T | B | 153.4/31 |
| C1046 | 4030007010 | S.CER C1608 CH 1H 100D-T | B | 168.4/53.7 |
| C1048 | 4030017810 | S.CER C1608 CH 1H 102J-T | B | 170.6/41.6 |
| C1049 | 4030017810 | S.CER C1608 CH 1H 102J-T | B | 154.6/41.6 |
| C1050 | 4030017810 | S.CER C1608 CH 1H 102J-T | B | 170.5/49.5 |
| C1051 | 4030017810 | S.CER C1608 CH 1H 102J-T | B | 154.7/49.4 |
| C1052 | 4030007100 | S.CER C1608 CH 1H 560J-T | B | 164.1/29.6 |
| C1053 | 4030007110 | S.CER C1608 CH 1H 680J-T | T | 175.2/77.3 |
| C1054 | 4030007010 | S.CER C1608 CH 1H 100D-T | B | 175.7/72.4 |
| C1055 | 4030007140 | S.CER C1608 CH 1H 121J-T | B | 175.7/74.2 |
| C1056 | 4030007050 | S.CER C1608 CH 1H 220J-T | T | 175.2/76 |
| C1057 | 4030007130 | S.CER C1608 CH 1H 101J-T | T | 172.1/77.1 |
| C1058 | 4030009530 | S.CER C1608 CH 1H 030B-T | B | 173.2/12.7 |
| C1060 | 4030017810 | S.CER C1608 CH 1H 102J-T | T | 178.6/94.4 |
| C1061 | 4030007090 | S.CER C1608 CH 1H 470J-T | B | 147.7/91.8 |
| C1062 | 4030007170 | S.CER C1608 CH 1H 221J-T | B | 149.5/91.8 |
| C1064 | 4030007090 | S.CER C1608 CH 1H 470J-T | T | 148.7/80.1 |
| C1066 | 4030007010 | S.CER C1608 CH 1H 100D-T | T | 138.6/81.9 |
| C1067 | 4030007010 | S.CER C1608 CH 1H 100D-T | T | 173.4/77.1 |
| C1068 | 4030009510 | S.CER C1608 CH 1H 010B-T | B | 175.4/46.1 |
| C1069 | 4030009510 | S.CER C1608 CH 1H 010B-T | B | 159.4/46.1 |
| C1070 | 4030006980 | S.CER C1608 CH 1H 070D-T | T | 137.2/81.9 |
| C1071 | 4030007100 | S.CER C1608 CH 1H 560J-T | B | 162.2/75.3 |
| C1072 | 4030007170 | S.CER C1608 CH 1H 221J-T | B | 162/78.7 |
| C1073 | 4030007080 | S.CER C1608 CH 1H 390J-T | B | 164.1/76.4 |
| C1074 | 4030007060 | S.CER C1608 CH 1H 270J-T | T | 148.7/78.6 |
| C1081 | 4030006900 | S.CER C1608 JB 1H 103K-T | B | 156.1/86 |
| C1082 | 4030006900 | S.CER C1608 JB 1H 103K-T | B | 151.3/91.8 |
| C1083 | 4030006900 | S.CER C1608 JB 1H 103K-T | B | 151.2/81.6 |
| C1084 | 4030006880 | S.CER C1608 JB 1H 472K-T | B | 149.4/81.6 |
| C1085 | 4030006880 | S.CER C1608 JB 1H 472K-T | B | 153/81.6 |
| C1091 | 4030006880 | S.CER C1608 JB 1H 472K-T | T | 149.3/149.4 |
| C1092 | 4030006880 | S.CER C1608 JB 1H 472K-T | T | 147/138.5 |
| C1093 | 4030006880 | S.CER C1608 JB 1H 472K-T | T | 161.3/135.8 |
| C1101 | 4030006900 | S.CER C1608 JB 1H 103K-T | T | 177/90.9 |
| C1102 | 4030006900 | S.CER C1608 JB 1H 103K-T | T | 175.4/115.5 |
| C1103 | 4030011600 | S.CER C1608 JB 1E 104K-T | T | 179.6/116.4 |
| C1104 | 4030011600 | S.CER C1608 JB 1E 104K-T | T | 175.4/87.7 |
| C1106 | 4030011600 | S.CER C1608 JB 1E 104K-T | T | 179.3/128.8 |
| C1107 | 4030011600 | S.CER C1608 JB 1E 104K-T | B | 172.3/124.2 |
| C1109 | 4030007090 | S.CER C1608 CH 1H 470J-T | T | 175.7/137.9 |
| C1110 | 4030006900 | S.CER C1608 JB 1H 103K-T | T | 175.7/136.6 |
| C1111 | 4030011600 | S.CER C1608 JB 1E 104K-T | T | 176.7/132 |
| C1112 | 4030006900 | S.CER C1608 JB 1H 103K-T | T | 179.3/132 |
| C1113 | 4030007090 | S.CER C1608 CH 1H 470J-T | T | 178.6/140.9 |
| C1114 | 4030006900 | S.CER C1608 JB 1H 103K-T | B | 178.4/138 |
| C1115 | 4030011600 | S.CER C1608 JB 1E 104K-T | T | 175.7/140 |
| C1116 | 4030006900 | S.CER C1608 JB 1H 103K-T | T | 165.7/138.7 |
| C1117 | 4030007010 | S.CER C1608 CH 1H 100D-T | T | 169.7/142.2 |
| C1118 | 4030011600 | S.CER C1608 JB 1E 104K-T | T | 171/142.2 |
| C1119 | 4030006880 | S.CER C1608 JB 1H 472K-T | T | 171.9/146.6 |
| C1120 | 4030006880 | S.CER C1608 JB 1H 472K-T | T | 171.9/148.4 |
| C1121 | 4030011600 | S.CER C1608 JB 1E 104K-T | T | 180.6/147.7 |
| C1122 | 4030009530 | S.CER C1608 CH 1H 030B-T | T | 178.2/120.3 |
| C1123 | 4030006900 | S.CER C1608 JB 1H 103K-T | T | 182.1/100.9 |
| C1124 | 4030006900 | S.CER C1608 JB 1H 103K-T | T | 175.3/105.9 |
| C1125 | 4030006900 | S.CER C1608 JB 1H 103K-T | T | 175.5/85.1 |
| C1126 | 4030011600 | S.CER C1608 JB 1E 104K-T | T | 173.4/131.1 |
| C1151 | 4030007110 | S.CER C1608 CH 1H 680J-T | B | 123.1/64 |
| C1152 | 4030007110 | S.CER C1608 CH 1H 680J-T | B | 123.1/57 |
| C1153 | 4030017810 | S.CER C1608 CH 1H 102J-T | T | 131.5/63.9 |
| C1201 | 4030007110 | S.CER C1608 CH 1H 680J-T | B | 120.2/21.8 |
| C1202 | 4030007110 | S.CER C1608 CH 1H 680J-T | B | 118.4/21.8 |
| C1207 | 4030006880 | S.CER C1608 JB 1H 472K-T | B | 123/11.8 |
| C1214 | 4030007170 | S.CER C1608 CH 1H 221J-T | T | 137.3/55.3 |
| C1215 | 4030011600 | S.CER C1608 JB 1E 104K-T | T | 137.6/51.9 |
| C1226 | 4030009500 | S.CER C1608 CH 1H 0R5B-T | B | 124.9/35.6 |
| C1227 | 4030009500 | S.CER C1608 CH 1H 0R5B-T | B | 115.4/35.6 |
| C1228 | 4030009920 | S.CER C1608 CH 1H 050B-T | B | 113.9/41.8 |
| C1231 | 4030006900 | S.CER C1608 JB 1H 103K-T | T | 118.9/21.5 |
| C1232 | 4030006900 | S.CER C1608 JB 1H 103K-T | T | 109/21.5 |
| C1234 | 4030006900 | S.CER C1608 JB 1H 103K-T | B | 123.5/38.3 |
| C1235 | 4030006880 | S.CER C1608 JB 1H 472K-T | B | 116.6/32.1 |
| C1236 | 4030006900 | S.CER C1608 JB 1H 103K-T | T | 119.8/40 |
| C1238 | 4030006900 | S.CER C1608 JB 1H 103K-T | B | 114/38.3 |
| C1239 | 4030006880 | S.CER C1608 JB 1H 472K-T | B | 106.8/32.3 |
| C1240 | 4030006900 | S.CER C1608 JB 1H 103K-T | T | 111.7/40.5 |
| C1241 | 4030006900 | S.CER C1608 JB 1H 103K-T | T | 113.6/38.6 |
| C1243 | 4030006880 | S.CER C1608 JB 1H 472K-T | B | 129.6/46.7 |
| C1244 | 4030007080 | S.CER C1608 CH 1H 390J-T | T | 149.6/67 |
| C1245 | 4030007130 | S.CER C1608 CH 1H 101J-T | T | 151/64.4 |
| C1246 | 4030007120 | S.CER C1608 CH 1H 820J-T | T | 150.9/67 |
| C1247 | 4030007090 | S.CER C1608 CH 1H 470J-T | T | 153.4/63.5 |
| C1248 | 4030007130 | S.CER C1608 CH 1H 101J-T | T | 153.4/66.8 |
| C1249 | 4030007020 | S.CER C1608 CH 1H 120J-T | T | 153.1/70.3 |
| C1250 | 4030007100 | S.CER C1608 CH 1H 560J-T | B | 152.4/74.3 |

M.=Mounted side (T: Mounted on the Top side, B: Mounted on the Bottom side)
S.=Surface mount

## [RXPLL-A UNIT]

| REF NO. | ORDER NO. | DESCRIPTION | M. | H/V LOCATION |
|---|---|---|---|---|
| C1251 | 4030006900 | S.CER C1608 JB 1H 103K-T | T | 160.2/92.9 |
| C1252 | 4030006900 | S.CER C1608 JB 1H 103K-T | T | 152.7/92.9 |
| C1253 | 4030006900 | S.CER C1608 JB 1H 103K-T | B | 152.5/111.2 |
| C1255 | 4030017810 | S.CER C1608 CH 1H 102J-T | B | 155.7/99.3 |
| C1256 | 4030007010 | S.CER C1608 CH 1H 100D-T | T | 156.3/98.8 |
| C1257 | 4030011600 | S.CER C1608 JB 1E 104K-T | B | 155.7/103 |
| C1258 | 4030007080 | S.CER C1608 CH 1H 390J-T | B | 152/97.5 |
| C1264 | 4030007110 | S.CER C1608 CH 1H 680J-T | T | 122/51.1 |
| C1265 | 4610001830 | S.TRI TZB4S100AB10R00 | T | 163.8/70.8 |
| C1266 | 4030007020 | S.CER C1608 CH 1H 120J-T | T | 160.1/74.5 |
| C1267 | 4030006880 | S.CER C1608 JB 1H 472K-T | B | 157/126.4 |
| C1268 | 4030006980 | S.CER C1608 CH 1H 070D-T | T | 149.6/64.4 |
| C1302 | 4030007060 | S.CER C1608 CH 1H 270J-T | T | 159.3/111 |
| C1303 | 4030006980 | S.CER C1608 CH 1H 070D-T | T | 159.3/112.9 |
| C1304 | 4030007070 | S.CER C1608 CH 1H 330J-T | T | 159.3/114.2 |
| C1305 | 4030007010 | S.CER C1608 CH 1H 100D-T | T | 153.5/114.6 |
| C1306 | 4030009650 | S.CER C1608 CH 1H 240J-T | T | 159.3/115.5 |
| C1307 | 4030007030 | S.CER C1608 CH 1H 150J-T | T | 153.5/120.2 |
| C1308 | 4030006900 | S.CER C1608 JB 1H 103K-T | T | 155.1/127.1 |
| C1309 | 4030007080 | S.CER C1608 CH 1H 390J-T | T | 156.5/125.8 |
| C1310 | 4030007080 | S.CER C1608 CH 1H 390J-T | T | 159.1/128.4 |
| C1311 | 4030006900 | S.CER C1608 JB 1H 103K-T | B | 149/118.9 |
| C1312 | 4030007060 | S.CER C1608 CH 1H 270J-T | T | 155.5/111.7 |
| C1313 | 4030007060 | S.CER C1608 CH 1H 270J-T | T | 159.1/127.1 |
| C1355 | 4030006880 | S.CER C1608 JB 1H 472K-T | T | 144.7/70 |
| C1357 | 4030007000 | S.CER C1608 CH 1H 090D-T | B | 144.6/67.1 |
| C1358 | 4030011600 | S.CER C1608 JB 1E 104K-T | B | 139.1/70.4 |
| C1360 | 4030011600 | S.CER C1608 JB 1E 104K-T | B | 146.4/70.4 |
| C1361 | 4030007020 | S.CER C1608 CH 1H 120J-T | B | 137.7/69.5 |
| C1362 | 4030011600 | S.CER C1608 JB 1E 104K-T | T | 137.5/65.6 |
| C1403 | 4030017810 | S.CER C1608 CH 1H 102J-T | T | 114.7/70.3 |
| C1404 | 4030017810 | S.CER C1608 CH 1H 102J-T | T | 116.3/104.8 |
| C1405 | 4030006900 | S.CER C1608 JB 1H 103K-T | B | 115.9/63.9 |
| C1406 | 4030017810 | S.CER C1608 CH 1H 102J-T | T | 114.2/66.2 |
| C1407 | 4030017810 | S.CER C1608 CH 1H 102J-T | T | 119.9/70.3 |
| C1408 | 4030006900 | S.CER C1608 JB 1H 103K-T | T | 116.3/73 |
| C1409 | 4030006900 | S.CER C1608 JB 1H 103K-T | T | 114.4/68.1 |
| C1410 | 4030007030 | S.CER C1608 CH 1H 150J-T | T | 116.3/83.3 |
| C1411 | 4030006990 | S.CER C1608 CH 1H 080D-T | T | 112.2/87.8 |
| C1412 | 4030007030 | S.CER C1608 CH 1H 150J-T | T | 116.3/93.7 |
| C1413 | 4030007020 | S.CER C1608 CH 1H 120J-T | T | 107/83.3 |
| C1414 | 4030006990 | S.CER C1608 CH 1H 080D-T | T | 103.6/86.6 |
| C1415 | 4030007020 | S.CER C1608 CH 1H 120J-T | T | 107/93.7 |
| C1416 | 4030006900 | S.CER C1608 JB 1H 103K-T | T | 113.2/103.4 |
| C1417 | 4030006900 | S.CER C1608 JB 1H 103K-T | T | 110.5/107.6 |
| C1418 | 4030017810 | S.CER C1608 CH 1H 102J-T | T | 110.4/105.8 |
| C1419 | 4030017810 | S.CER C1608 CH 1H 102J-T | T | 111/108.9 |
| C1420 | 4030007120 | S.CER C1608 CH 1H 820J-T | B | 113.2/114.2 |
| C1421 | 4030007150 | S.CER C1608 CH 1H 151J-T | B | 115/114.2 |
| C1423 | 4030010750 | S.CER C1608 CH 1H 201J-T | B | 120.3/111.1 |
| C1424 | 4030007010 | S.CER C1608 CH 1H 100D-T | T | 132.8/103.3 |
| C1425 | 4030011600 | S.CER C1608 JB 1E 104K-T | T | 136.5/106.2 |
| C1426 | 4030011600 | S.CER C1608 JB 1E 104K-T | T | 137.8/106.2 |
| C1427 | 4030006900 | S.CER C1608 JB 1H 103K-T | T | 133.9/106.2 |
| C1428 | 4030006980 | S.CER C1608 CH 1H 070D-T | T | 119.5/109 |
| C1429 | 4030006900 | S.CER C1608 JB 1H 103K-T | T | 120.5/113.6 |
| C1430 | 4030007040 | S.CER C1608 CH 1H 180J-T | B | 131.9/115.3 |
| C1431 | 4030017810 | S.CER C1608 CH 1H 102J-T | T | 127/116.2 |
| C1432 | 4030009980 | S.CER C1608 JB 1H 152K-T | T | 129.1/114.1 |
| C1433 | 4030011600 | S.CER C1608 JB 1E 104K-T | T | 130.4/114.1 |
| C1434 | 4030009920 | S.CER C1608 CH 1H 050B-T | B | 124.7/134.4 |
| C1435 | 4030009920 | S.CER C1608 CH 1H 050B-T | B | 124.7/131.6 |
| C1436 | 4030011600 | S.CER C1608 JB 1E 104K-T | B | 137.2/122.2 |
| C1437 | 4030009920 | S.CER C1608 CH 1H 050B-T | T | 104/83.3 |
| C1438 | 4030009920 | S.CER C1608 CH 1H 050B-T | T | 102.3/86.6 |
| C1439 | 4030009920 | S.CER C1608 CH 1H 050B-T | T | 110/93.7 |
| C1441 | 4030006880 | S.CER C1608 JB 1H 472K-T | T | 120.5/116.2 |
| C1451 | 4030007020 | S.CER C1608 CH 1H 120J-T | T | 125.5/80.1 |
| C1453 | 4030007030 | S.CER C1608 CH 1H 150J-T | T | 122.1/85.1 |
| C1454 | 4030007030 | S.CER C1608 CH 1H 150J-T | T | 120.8/85.1 |
| C1456 | 4030007020 | S.CER C1608 CH 1H 120J-T | T | 125.5/90.9 |
| C1457 | 4030006900 | S.CER C1608 JB 1H 103K-T | T | 118.3/72.9 |
| C1458 | 4030006900 | S.CER C1608 JB 1H 103K-T | T | 116.6/103.5 |
| C1501 | 4030018530 | S.CER C3216 CH 1H 103J-T | T | 131.2/124.5 |
| C1502 | 4550003220 | S.TAN TEESVA 1E 105M8R | T | 132.1/139.2 |
| C1503 | 4030006900 | S.CER C1608 JB 1H 103K-T | T | 137/142.1 |
| C1504 | 4030012610 | S.CER C2012 JB 1C 474K-T | T | 136.7/140.5 |
| C1505 | 4030007010 | S.CER C1608 CH 1H 100D-T | T | 130/143.5 |
| C1506 | 4030010760 | S.CER C1608 CH 1H 331J-T | T | 131.3/146.3 |
| C1507 | 4510008540 | S.ELE EEE1CA100SR | T | 142.6/140.8 |
| C1508 | 4030011600 | S.CER C1608 JB 1E 104K-T | B | 128.8/148.8 |
| C1509 | 4030018800 | S.CER C3216 CH 1H 223J-T | T | 135.8/145.1 |
| C1510 | 4030007110 | S.CER C1608 CH 1H 680J-T | T | 136.5/158.9 |
| C1511 | 4510008540 | S.ELE EEE1CA100SR | T | 132.7/150.6 |
| C1512 | 4030011600 | S.CER C1608 JB 1E 104K-T | T | 129.6/149 |
| C1513 | 4030011600 | S.CER C1608 JB 1E 104K-T | T | 129.6/158.1 |
| C1514 | 4510008540 | S.ELE EEE1CA100SR | T | 132.7/156.5 |
| C1515 | 4030007160 | S.CER C1608 CH 1H 181J-T | T | 132.2/160.8 |
| C1516 | 4030009350 | S.CER C1608 CH 1H 3R5B-T | T | 130.9/160.8 |
| C1517 | 4030007110 | S.CER C1608 CH 1H 680J-T | T | 115.3/155 |
| C1518 | 4030018530 | S.CER C3216 CH 1H 103J-T | T | 131.2/132.8 |
| C1519 | 4550003220 | S.TAN TEESVA 1E 105M8R | T | 122.9/140.9 |

## [RXPLL-A UNIT]

| REF NO. | ORDER NO. | DESCRIPTION | M. | H/V LOCATION |
|---|---|---|---|---|
| C1520 | 4030006900 | S.CER C1608 JB 1H 103K-T | T | 119.8/140.7 |
| C1521 | 4030012610 | S.CER C2012 JB 1C 474K-T | T | 116.2/142.1 |
| C1522 | 4030007010 | S.CER C1608 CH 1H 100D-T | T | 123.7/143.5 |
| C1523 | 4030010760 | S.CER C1608 CH 1H 331J-T | T | 122.4/146.3 |
| C1524 | 4030018800 | S.CER C3216 CH 1H 223J-T | T | 117.9/145.2 |
| C1525 | 4510008540 | S.ELE EEE1CA100SR | T | 124.9/150.6 |
| C1526 | 4030011600 | S.CER C1608 JB 1E 104K-T | T | 128/149 |
| C1527 | 4030011600 | S.CER C1608 JB 1E 104K-T | T | 128/158.1 |
| C1528 | 4510008540 | S.ELE EEE1CA100SR | T | 124.9/156.5 |
| C1529 | 4030017870 | S.CER C1608 CH 1H 681J-T | T | 125.4/160.8 |
| C1530 | 4030011330 | S.CER C1608 CH 1H 391J-T | T | 126.7/160.8 |
| C1531 | 4510008500 | S.ELE EEE1CA101WP | T | 111.3/167.3 |
| C1532 | 4030011600 | S.CER C1608 JB 1E 104K-T | T | 107.1/167.3 |
| C1533 | 4030011600 | S.CER C1608 JB 1E 104K-T | T | 115.5/167.3 |
| C1534 | 4510008500 | S.ELE EEE1CA101WP | T | 119.7/167.3 |
| C1535 | 4030011600 | S.CER C1608 JB 1E 104K-T | T | 133.7/172.6 |
| C1536 | 4030017870 | S.CER C1608 CH 1H 681J-T | T | 126.2/179.5 |
| C1537 | 4510008500 | S.ELE EEE1CA101WP | T | 111.3/176 |
| C1538 | 4030011600 | S.CER C1608 JB 1E 104K-T | T | 107.1/176 |
| C1539 | 4030011600 | S.CER C1608 JB 1E 104K-T | T | 115.5/176 |
| C1540 | 4510008500 | S.ELE EEE1CA101WP | T | 119.7/176 |
| C1541 | 4030007050 | S.CER C1608 CH 1H 220J-T | T | 124/175 |
| C1651 | 4030006880 | S.CER C1608 JB 1H 472K-T | B | 105.5/144 |
| C1653 | 4030006880 | S.CER C1608 JB 1H 472K-T | B | 109/137.2 |
| C1654 | 4030017810 | S.CER C1608 CH 1H 102J-T | B | 106.9/137.2 |
| C1655 | 4030009530 | S.CER C1608 CH 1H 030B-T | T | 107.6/136.8 |
| C1656 | 4610001970 | S.TRI TZC3P200A110R00 | T | 110.9/136.2 |
| C1657 | 4030010220 | S.CER C2012 CH 1H 102J-T | T | 116.4/122.7 |
| C1658 | 4030010220 | S.CER C2012 CH 1H 102J-T | T | 116.4/130.9 |
| C1659 | 4030011600 | S.CER C1608 JB 1E 104K-T | T | 107.8/120 |
| C1660 | 4030011600 | S.CER C1608 JB 1E 104K-T | B | 134/174 |
| C1661 | 4030011600 | S.CER C1608 JB 1E 104K-T | B | 145.2/171.3 |
| C1662 | 4030011600 | S.CER C1608 JB 1E 104K-T | T | 144.3/178 |
| C1663 | 4030011600 | S.CER C1608 JB 1E 104K-T | T | 135.1/170.2 |
| C1665 | 4030006900 | S.CER C1608 JB 1H 103K-T | T | 138.9/164.1 |
| C1666 | 4030006880 | S.CER C1608 JB 1H 472K-T | B | 113.3/144 |
| C1701 | 4030011600 | S.CER C1608 JB 1E 104K-T | T | 153.4/163 |
| C1702 | 4030011600 | S.CER C1608 JB 1E 104K-T | T | 144.4/163 |
| C1703 | 4510004601 | ELE 16 ME 1000 HC | | |
| C1704 | 4030011600 | S.CER C1608 JB 1E 104K-T | B | 180.1/160.2 |
| C1705 | 4030011600 | S.CER C1608 JB 1E 104K-T | B | 186.4/160.2 |
| C1706 | 4510008520 | S.ELE EEE1CA470SP | T | 172.7/154.8 |
| C1707 | 4030011600 | S.CER C1608 JB 1E 104K-T | T | 149.7/154.8 |
| C1708 | 4030006880 | S.CER C1608 JB 1H 472K-T | T | 175.7/166.8 |
| C1709 | 4030006880 | S.CER C1608 JB 1H 472K-T | T | 172.6/166.8 |
| C1710 | 4030006880 | S.CER C1608 JB 1H 472K-T | T | 169.6/166.8 |
| C1711 | 4030011340 | S.CER C1608 CH 1H 471J-T | T | 171.4/163.5 |
| C1712 | 4030011340 | S.CER C1608 CH 1H 471J-T | T | 167.5/163.5 |
| C1713 | 4030006880 | S.CER C1608 JB 1H 472K-T | B | 165.5/168.8 |
| C1714 | 4030006880 | S.CER C1608 JB 1H 472K-T | B | 153.8/141.8 |
| C1716 | 4030006880 | S.CER C1608 JB 1H 472K-T | B | 154.7/145.1 |
| C1717 | 4030006880 | S.CER C1608 JB 1H 472K-T | B | 152.9/145.1 |
| C1719 | 4030006880 | S.CER C1608 JB 1H 472K-T | B | 151.1/145.1 |
| C1720 | 4030006880 | S.CER C1608 JB 1H 472K-T | B | 155.6/141.8 |
| C1721 | 4030006880 | S.CER C1608 JB 1H 472K-T | B | 157.4/141.8 |
| | | | | |
| RL1001 | 6330001750 | RLY FTR-B4CA012Z | | |
| RL1002 | 6330001750 | RLY FTR-B4CA012Z | | |
| RL1003 | 6330001750 | RLY FTR-B4CA012Z | | |
| RL1004 | 6330001750 | RLY FTR-B4CA012Z | | |
| RL1005 | 6330001750 | RLY FTR-B4CA012Z | | |
| RL1006 | 6330001750 | RLY FTR-B4CA012Z | | |
| RL1203 | 6330001750 | RLY FTR-B4CA012Z | | |
| RL1206 | 6330001750 | RLY FTR-B4CA012Z | | |
| | | | | |
| J2 | 6510019991 | S.CNR 52808-2271 (2291) | T | 25/9 |
| J10 | 6510007020 | CNR TMP-J01X-V6 | | |
| J351 | 6510007020 | CNR TMP-J01X-V6 | | |
| J421 | 6510007020 | CNR TMP-J01X-V6 | | |
| J561 | 6510007020 | CNR TMP-J01X-V6 | | |
| J601 | 6510007020 | CNR TMP-J01X-V6 | | |
| J681 | 6510007020 | CNR TMP-J01X-V6 | | |
| J831 | 6510007020 | CNR TMP-J01X-V6 | | |
| J1001 | 6510007020 | CNR TMP-J01X-V6 | | |
| J1002 | 6510007020 | CNR TMP-J01X-V6 | | |
| J1101 | 6510007020 | CNR TMP-J01X-V6 | | |
| J1201 | 6510007020 | CNR TMP-J01X-V6 | | |
| J1301 | 6510007020 | CNR TMP-J01X-V6 | | |
| J1501 | 6510018961 | S.CNR B2B-PH-SM4-TB (LF) (SN) | T | 149.6/177.5 |
| J1701 | 6510019981 | S.CNR 52808-1671 (1690) | T | 168/177.2 |
| | | | | |
| W1052 | 9016201006 | WIR 73/98/025/X98/X98 | | |
| W1401 | 9029495075 | JMP 73/98/020/X98/X98 | | |
| W1411 | 7120000480 | S.JMP MJP-0.4-T | T | 125.1/111.6 |
| | | | | |
| EP20 | 6910012350 | S.BEA MMZ1608Y 102BT | T | 85.4/126 |
| EP21 | 6910012350 | S.BEA MMZ1608Y 102BT | T | 88.7/124 |
| EP22 | 6910012350 | S.BEA MMZ1608Y 102BT | T | 90/124 |

M.=Mounted side (T: Mounted on the Top side, B: Mounted on the Bottom side)
S.=Surface mount

## [RXPLL-A UNIT]

| REF NO. | ORDER NO. | DESCRIPTION | M. | H/V LOCATION |
|---|---|---|---|---|
| EP101 | 6910012350 | S.BEA MMZ1608Y 102BT | B | 47.6/98.6 |
| EP102 | 6910012350 | S.BEA MMZ1608Y 102BT | B | 47.6/96.8 |
| EP103 | 6910012350 | S.BEA MMZ1608Y 102BT | T | 46/96.8 |
| EP104 | 6910012350 | S.BEA MMZ1608Y 102BT | T | 46/92.9 |
| EP105 | 6910012350 | S.BEA MMZ1608Y 102BT | T | 46/91.6 |
| EP106 | 6910012350 | S.BEA MMZ1608Y 102BT | T | 46/89 |
| EP107 | 6910012350 | S.BEA MMZ1608Y 102BT | B | 47.6/100.4 |
| EP108 | 6910012350 | S.BEA MMZ1608Y 102BT | B | 47.6/102.2 |
| EP1701 | 6910012350 | S.BEA MMZ1608Y 102BT | T | 170.1/163.5 |
| EP1702 | 6910012350 | S.BEA MMZ1608Y 102BT | T | 168.8/163.5 |
| EP1801 | 6910012350 | S.BEA MMZ1608Y 102BT | B | 153/132.7 |
| EP1802 | 6910012350 | S.BEA MMZ1608Y 102BT | B | 142.5/18.8 |
| EP1804 | 6910012350 | S.BEA MMZ1608Y 102BT | B | 112.5/138.7 |
| EP1805 | 6910012350 | S.BEA MMZ1608Y 102BT | B | 150.2/141.8 |
| EP1806 | 6910012350 | S.BEA MMZ1608Y 102BT | B | 128.6/64.3 |
| EP1807 | 6910012350 | S.BEA MMZ1608Y 102BT | B | 117.4/50.2 |
| EP1808 | 6910012350 | S.BEA MMZ1608Y 102BT | B | 137/166.9 |
| EP1809 | 6910012350 | S.BEA MMZ1608Y 102BT | B | 147.4/127.4 |
| EP1810 | 6910012350 | S.BEA MMZ1608Y 102BT | B | 131.3/64.2 |
| EP1811 | 6910012350 | S.BEA MMZ1608Y 102BT | T | 160.7/56.3 |
| EP1812 | 6910012350 | S.BEA MMZ1608Y 102BT | B | 153.5/137.4 |
| EP1813 | 6910012350 | S.BEA MMZ1608Y 102BT | B | 132.6/65.7 |
| EP1814 | 6910012350 | S.BEA MMZ1608Y 102BT | B | 147.2/22.3 |
| EP1815 | 6910012350 | S.BEA MMZ1608Y 102BT | B | 156/62.6 |
| EP1816 | 6910012350 | S.BEA MMZ1608Y 102BT | B | 160.4/20.9 |
| EP1817 | 6910012350 | S.BEA MMZ1608Y 102BT | B | 168.6/62.2 |
| EP1818 | 6910012350 | S.BEA MMZ1608Y 102BT | B | 151.2/133.2 |
| EP1819 | 6910012350 | S.BEA MMZ1608Y 102BT | B | 145.6/127.9 |
| EP1820 | 6910012350 | S.BEA MMZ1608Y 102BT | B | 148.6/19.8 |
| EP1821 | 6910012350 | S.BEA MMZ1608Y 102BT | B | 148.6/14.1 |
| EP1825 | 6910012350 | S.BEA MMZ1608Y 102BT | B | 126.6/7 |
| EP1826 | 6910012350 | S.BEA MMZ1608Y 102BT | B | 151.5/137.7 |
| EP1830 | 6910012350 | S.BEA MMZ1608Y 102BT | B | 141.3/135.2 |
| EP1831 | 6910012350 | S.BEA MMZ1608Y 102BT | B | 143.4/128.5 |
| EP1832 | 6910012350 | S.BEA MMZ1608Y 102BT | B | 149.2/137.5 |
| EP1833 | 6910012350 | S.BEA MMZ1608Y 102BT | B | 147.2/133.5 |
| EP1834 | 6910012350 | S.BEA MMZ1608Y 102BT | T | 115.8/108.3 |
| EP1835 | 6910012350 | S.BEA MMZ1608Y 102BT | B | 141.6/128.5 |
| EP1836 | 6910012350 | S.BEA MMZ1608Y 102BT | T | 111/110.2 |
| EP1837 | 6910012350 | S.BEA MMZ1608Y 102BT | B | 145.8/134.1 |
| EP1838 | 6910012350 | S.BEA MMZ1608Y 102BT | T | 116.3/106.1 |

## [RXPLL-B UNIT]

| REF NO. | ORDER NO. | DESCRIPTION | M. | H/V LOCATION |
|---|---|---|---|---|
| IC1 | 1130011530 | S.IC CD74HC4094M96 | T | 11.9/24.1 |
| IC2 | 1130009691 | S.IC TC74HCT7007AF (F) | T | 22.8/23.3 |
| IC51 | 1180001251 | S.IC TA7808F (TE16L,Q) | T | 77/16.7 |
| IC61 | 1180000421 | S.IC TA78L05F (TE12R,F) | B | 56.5/16 |
| IC101 | 1140007881 | S.IC TC190G08EFG0046JDZ | T | 31.3/89.7 |
| IC102 | 1130003831 | S.IC TC7S04F (TE85R,F) | T | 33.1/74.7 |
| IC104 | 1130003831 | S.IC TC7S04F (TE85R,F) | T | 31.7/101.1 |
| IC201 | 1130009230 | S.IC LMX2306TMX/NOPB | T | 27.9/38.8 |
| IC501 | 1140007881 | S.IC TC190G08EFG0046JDZ | T | 31.3/142.5 |
| IC502 | 1130003831 | S.IC TC7S04F (TE85R,F) | T | 24.8/127.4 |
| IC503 | 1130003831 | S.IC TC7S04F (TE85R,F) | T | 31.7/154.1 |
| IC651 | 1140004550 | S.IC M65343FP/SC1287 | T | 22.6/169.2 |
| IC652 | 1130003831 | S.IC TC7S04F (TE85R,F) | T | 13.7/163.1 |
| IC1051 | 1190002010 | S.IC SD5400CY | T | 176.9/99.9 |
| IC1081 | 1110006180 | S.IC UPG2009TB-E3 | B | 151.6/85.1 |
| IC1402 | 1190002110 | S.IC NJG1519KC1-TE3 | T | 117.3/69.5 |
| IC1403 | 1190002110 | S.IC NJG1519KC1-TE3 | T | 113.4/106.3 |
| IC1501 | 1110006121 | S.IC DBM9A41-G-TR | T | 121.2/124.5 |
| IC1502 | 1110006121 | S.IC DBM9A41-G-TR | T | 121.2/133 |
| IC1503 | 1110006100 | S.IC NJM5534MD-TE1 | T | 138.4/151.7 |
| IC1504 | 1110006100 | S.IC NJM5534MD-TE1 | T | 119.2/151.7 |
| IC1505 | 1110006190 | S.IC NJM074M-TE1 | T | 128.8/166.9 |
| IC1506 | 1110006100 | S.IC NJM5534MD-TE1 | T | 128.8/175.6 |
| IC1651 | 1130011920 | S.IC TC74LCX00F (EL) | T | 110/126.2 |
| IC1652 | 1110005420 | S.IC BA15532F-E2 | T | 139.8/175.6 |
| IC1653 | 1110005100 | S.IC NJM072BM-TE1 | B | 140/172 |
| IC1701 | 1130011530 | S.IC CD74HC4094M96 | T | 158/166.7 |
| IC1702 | 1130011530 | S.IC CD74HC4094M96 | T | 148.9/166.7 |
| IC1703 | 1160000131 | S.IC TD62783AFG (S.EL) | T | 157.3/154.8 |
| IC1704 | 1180000790 | S.IC AN78L10M (E1) | B | 183.2/159.8 |
| Q1 | 1590001050 | S.TR DTC114TUA T106 | B | 30.3/22.6 |
| Q30 | 1530002060 | S.TR 2SC4081 T106 R | T | 22.3/110.9 |
| Q41 | 1590000680 | S.TR DTC114EUA T106 | T | 12.8/34.2 |
| Q150 | 1560000331 | S.FET 2SK210-GR (TE85R,F) | T | 26.9/53 |
| Q151 | 1530002280 | S.TR 2SC4081 T106 S | B | 33.6/57.2 |
| Q152 | 1530002280 | S.TR 2SC4081 T106 S | B | 30.8/78.2 |
| Q201 | 1590001330 | S.TR DTA114EUA T106 | T | 29.6/34.1 |
| Q220 | 1560000331 | S.FET 2SK210-GR (TE85R,F) | T | 72.5/33.9 |
| Q230 | 1560000331 | S.FET 2SK210-GR (TE85R,F) | T | 72.5/46.4 |
| Q240 | 1560000331 | S.FET 2SK210-GR (TE85R,F) | T | 72.5/58.9 |
| Q250 | 1560000331 | S.FET 2SK210-GR (TE85R,F) | T | 72.5/71.4 |
| Q260 | 1560000331 | S.FET 2SK210-GR (TE85R,F) | T | 72.5/83.9 |
| Q270 | 1560000331 | S.FET 2SK210-GR (TE85R,F) | T | 72.5/95.8 |
| Q280 | 1590000680 | S.TR DTC114EUA T106 | T | 82.3/34.4 |
| Q281 | 1590000680 | S.TR DTC114EUA T106 | T | 82.3/46.9 |
| Q282 | 1590000680 | S.TR DTC114EUA T106 | T | 82.3/59.4 |
| Q283 | 1590000680 | S.TR DTC114EUA T106 | T | 82.3/71.9 |
| Q284 | 1590000680 | S.TR DTC114EUA T106 | T | 82.3/84.4 |
| Q285 | 1590000680 | S.TR DTC114EUA T106 | T | 82.3/96.4 |
| Q301 | 1530003431 | S.TR 2SC5226-4-TL-E | T | 92.1/30.1 |
| Q302 | 1530003431 | S.TR 2SC5226-4-TL-E | B | 89.1/42.5 |
| Q303 | 1530003431 | S.TR 2SC5226-4-TL-E | B | 91.3/25.1 |
| Q341 | 1590000680 | S.TR DTC114EUA T106 | T | 86.3/36.7 |
| Q351 | 1580000751 | S.FET 3SK294 (TE85L,F) | T | 92.1/56.9 |
| Q352 | 1530003431 | S.TR 2SC5226-4-TL-E | B | 89.2/64.5 |
| Q363 | 1590000680 | S.TR DTC114EUA T106 | T | 86.8/54.3 |
| Q364 | 1590001330 | S.TR DTA114EUA T106 | T | 86.8/57.4 |
| Q441 | 1590000680 | S.TR DTC114EUA T106 | T | 86.5/73.7 |
| Q502 | 1590000680 | S.TR DTC114EUA T106 | T | 41.9/128.8 |
| Q540 | 1530002060 | S.TR 2SC4081 T106 R | B | 58.7/141.2 |
| Q541 | 1560000331 | S.FET 2SK210-GR (TE85R,F) | T | 68.9/142.8 |
| Q561 | 1530003431 | S.TR 2SC5226-4-TL-E | T | 70.6/153.8 |
| Q580 | 1530003431 | S.TR 2SC5226-4-TL-E | T | 41.7/147.4 |
| Q591 | 1530003151 | S.TR 2SC4673D-TD-E | T | 61.7/166.5 |
| Q592 | 1520000561 | S.TR 2SB1123 T-TD-E | B | 52/165.3 |
| Q593 | 1590000680 | S.TR DTC114EUA T106 | B | 54.8/171.2 |
| Q601 | 1530002601 | S.TR 2SC4215-O (TE85R,F) | T | 49.5/118.2 |
| Q680 | 1530002060 | S.TR 2SC4081 T106 R | T | 37.5/163.2 |
| Q702 | 1530002601 | S.TR 2SC4215-O (TE85R,F) | T | 31.4/110.9 |
| Q1001 | 1530003851 | S.TR 2SC5551F-TD-E | B | 174/9 |
| Q1004 | 1590001960 | S.TR XP4311 (TX) | T | 150/18.8 |
| Q1005 | 1590001960 | S.TR XP4311 (TX) | T | 145.9/18.8 |
| Q1006 | 1530003851 | S.TR 2SC5551F-TD-E | B | 150/37.6 |
| Q1007 | 1530003851 | S.TR 2SC5551F-TD-E | B | 176.5/42.5 |
| Q1008 | 1530003851 | S.TR 2SC5551F-TD-E | B | 160.5/42.5 |
| Q1101 | 1530003860 | TR 2SC3950D | | |
| Q1102 | 1590000680 | S.TR DTC114EUA T106 | T | 165.5/133.8 |
| Q1103 | 1520000561 | S.TR 2SB1123 T-TD-E | B | 168.6/127.8 |
| Q1104 | 1530003860 | TR 2SC3950D | | |
| Q1105 | 1530003841 | S.TR 2SC5501-4-TR-E | T | 166.5/142.1 |
| Q1205 | 1590001960 | S.TR XP4311 (TX) | T | 158.8/55.6 |
| Q1209 | 1530003851 | S.TR 2SC5551F-TD-E | B | 121/34.9 |
| Q1210 | 1530003851 | S.TR 2SC5551F-TD-E | B | 111.5/34.9 |
| Q1211 | 1560001311 | S.FET MMBFU310LT1G | T | 159.5/96.4 |
| Q1212 | 1560001311 | S.FET MMBFU310LT1G | T | 153.5/96.4 |
| Q1213 | 1590000680 | S.TR DTC114EUA T106 | B | 156.9/123.7 |
| Q1214 | 1520000561 | S.TR 2SB1123 T-TD-E | B | 155.4/113.5 |
| Q1301 | 1530003151 | S.TR 2SC4673D-TD-E | T | 157.8/120 |
| Q1352 | 1530003851 | S.TR 2SC5551F-TD-E | B | 140/66.7 |
| Q1401 | 1530003841 | S.TR 2SC5501-4-TR-E | T | 131.9/105.8 |

M.=Mounted side (T: Mounted on the Top side, B: Mounted on the Bottom side)
S.=Surface mount

## [RX-PLL-B UNIT]

| REF NO. | ORDER NO. | DESCRIPTION | M. | H/V LOCATION |
|---|---|---|---|---|
| Q1402 | 1530003021 | S.TR 2SC4402-3-TL-E | T | 123.4/111.8 |
| Q1403 | 1530003021 | S.TR 2SC4402-3-TL-E | T | 123.4/114.3 |
| Q1501 | 1530003450 | S.TR 2SC4835-R (TX) | T | 133.5/143.5 |
| Q1502 | 1530003450 | S.TR 2SC4835-R (TX) | T | 120.4/143.5 |
| Q1651 | 1530002601 | S.TR 2SC4215-O (TE85R,F) | B | 105.6/140.3 |
| Q1701 | 1590001960 | S.TR XP4311 (TX) | T | 106.6/43.9 |
| Q1702 | 1590001960 | S.TR XP4311 (TX) | T | 148.9/147.2 |
| Q1703 | 1590001960 | S.TR XP4311 (TX) | T | 146.4/147.2 |
| | | | | |
| D101 | 1750000520 | S.DIO DAN222TL | T | 41.8/86.2 |
| D152 | 1720000590 | S.VCP MA357 (TX) | T | 17.6/59.9 |
| D153 | 1790000491 | S.DIO HSM88ASTR-E | T | 27.2/60.4 |
| D154 | 1790000491 | S.DIO HSM88ASTR-E | T | 27.2/63.8 |
| D201 | 1750000520 | S.DIO DAN222TL | T | 32.4/34.1 |
| D220 | 1720000590 | S.VCP MA357 (TX) | T | 50.8/31.8 |
| D221 | 1720000590 | S.VCP MA357 (TX) | T | 52.9/31.8 |
| D222 | 1790000620 | S.DIO MA77 (TX) | T | 82.6/29.8 |
| D230 | 1720000590 | S.VCP MA357 (TX) | T | 50.8/44.2 |
| D231 | 1720000590 | S.VCP MA357 (TX) | T | 52.9/44.2 |
| D232 | 1790000620 | S.DIO MA77 (TX) | T | 82.6/42.3 |
| D240 | 1720000590 | S.VCP MA357 (TX) | T | 50.8/56.7 |
| D241 | 1720000590 | S.VCP MA357 (TX) | T | 52.9/56.7 |
| D242 | 1790000620 | S.DIO MA77 (TX) | T | 82.6/54.8 |
| D250 | 1720000590 | S.VCP MA357 (TX) | T | 50.8/69.2 |
| D252 | 1790000620 | S.DIO MA77 (TX) | T | 82.6/67.3 |
| D261 | 1720000590 | S.VCP MA357 (TX) | T | 52.9/81.7 |
| D262 | 1790000620 | S.DIO MA77 (TX) | T | 82.6/79.8 |
| D270 | 1720000590 | S.VCP MA357 (TX) | T | 50.8/94.2 |
| D271 | 1720000590 | S.VCP MA357 (TX) | T | 52.4/96.7 |
| D272 | 1790000620 | S.DIO MA77 (TX) | T | 82.5/92 |
| D341 | 1790000620 | S.DIO MA77 (TX) | T | 90/37.2 |
| D342 | 1160000070 | S.DIO DAN202K T146 | B | 81.1/47.7 |
| D362 | 1790000620 | S.DIO MA77 (TX) | T | 88.3/65.5 |
| D363 | 1790000620 | S.DIO MA77 (TX) | T | 88.3/62 |
| D421 | 1790000620 | S.DIO MA77 (TX) | T | 91.9/85 |
| D441 | 1790000620 | S.DIO MA77 (TX) | T | 89.6/74.4 |
| D501 | 1750000520 | S.DIO DAN222TL | T | 42/132 |
| D542 | 1720000590 | S.VCP MA357 (TX) | T | 62.5/139.6 |
| D1101 | 1790000620 | S.DIO MA77 (TX) | T | 177.6/146.6 |
| D1102 | 1790000620 | S.DIO MA77 (TX) | T | 177.6/148.4 |
| D1351 | 1750000581 | S.DIO 1SV307 (TPH3,F) | T | 140.8/71.1 |
| D1653 | 1750000550 | S.DIO 1SS355 TE-17 | T | 138.9/167.2 |
| D1654 | 1750000550 | S.DIO 1SS355 TE-17 | T | 142.5/167.2 |
| D1701 | 1790001670 | S.DIO RB706F-40T106 | T | 170.5/160.8 |
| | | | | |
| FI101 | 2020002090 | S.CER SFECV10M7FD00-R0 | T | 26/73.9 |
| FI1401 | 2030000321 | S.MLH FL-359A (64.555 MHz) | T | 116.3/88.5 |
| FI1402 | 2030000311 | S.MLH FL-360A (64.555 MHz) | T | 107/88.5 |
| FI1403 | 2030000520 | S.MLH DSF753SDF | T | 126/85.5 |
| | | | | |
| L1 | 6200003261 | S.COL NLV32T-101J | T | 10.8/15.4 |
| L2 | 6200003261 | S.COL NLV32T-101J | T | 29/19.9 |
| L10 | 6200003950 | S.COL HF50ACC 322513-T | T | 38.6/14.7 |
| L11 | 6200003950 | S.COL HF50ACC 322513-T | T | 13.8/15.4 |
| L12 | 6200003950 | S.COL HF50ACC 322513-T | T | 16.8/15.4 |
| L13 | 6200003950 | S.COL HF50ACC 322513-T | T | 29/15.4 |
| L20 | 6200003321 | S.COL NLV32T-3R3J | T | 85.9/123.8 |
| L30 | 6200005491 | S.COL NLV32T-331J | T | 20.6/120 |
| L101 | 6200001831 | S.COL NLV32T-100J | T | 38.3/72.8 |
| L151 | 6130002970 | COL LB-343 | | |
| L152 | 6200001831 | S.COL NLV32T-100J | T | 30/54.5 |
| L201 | 6200005011 | S.COL NLV25T-100J | T | 22.2/45 |
| L211 | 6200003661 | S.COL NLV25T-R68J | B | 45.4/35.3 |
| L220 | 6200010790 | S.COL C2520C-3R9G-A | T | 51.9/37.5 |
| L221 | 6190001421 | COL #E526GN-110502 | | |
| L222 | 6200010790 | S.COL C2520C-3R9G-A | T | 76.2/37.7 |
| L230 | 6200010830 | S.COL C2520C-3R3G-A | T | 51.9/50 |
| L231 | 6190001421 | COL #E526GN-110502 | | |
| L232 | 6200010830 | S.COL C2520C-3R3G-A | T | 76.2/50.2 |
| L240 | 6200010830 | S.COL C2520C-3R3G-A | T | 51.9/62.4 |
| L241 | 6190001421 | COL #E526GN-110502 | | |
| L242 | 6200010830 | S.COL C2520C-3R3G-A | T | 76.2/62.7 |
| L250 | 6200010820 | S.COL C2520C-2R7G-A | T | 51.9/74.9 |
| L251 | 6190001421 | COL #E526GN-110502 | | |
| L252 | 6200010820 | S.COL C2520C-2R7G-A | T | 76.2/75.2 |
| L260 | 6200010820 | S.COL C2520C-2R7G-A | T | 51.9/87.4 |
| L261 | 6190001411 | COL #E526GN-110501 | | |
| L262 | 6200010820 | S.COL C2520C-2R7G-A | T | 76.2/87.7 |
| L270 | 6200010810 | S.COL C2520C-2R2G-A | T | 51.9/99.8 |
| L271 | 6190001411 | COL #E526GN-110501 | | |
| L272 | 6200010810 | S.COL C2520C-2R2G-A | T | 76/100.2 |
| L280 | 6200005011 | S.COL NLV25T-100J | T | 67.4/25.5 |
| L302 | 6200001831 | S.COL NLV32T-100J | T | 89.3/42.6 |
| L331 | 6200002641 | S.COL NLV25T-R15J | T | 95.1/34.1 |
| L332 | 6200002411 | S.COL NLV25T-056J | B | 93.2/36 |
| L341 | 6200003261 | S.COL NLV32T-101J | T | 87/39.6 |
| L351 | 6200001831 | S.COL NLV32T-100J | T | 91.3/62 |
| L421 | 6200008641 | S.COL NLV32T-391J | T | 87/81 |
| L441 | 6200002601 | S.COL NLV25T-047J | T | 91.9/72.3 |

## [RXPLL-B UNIT]

| REF NO. | ORDER NO. | DESCRIPTION | M. | H/V LOCATION |
|---|---|---|---|---|
| L442 | 6200010730 | S.COL C2520C-68NG-A | T | 90.5/78.2 |
| L451 | 6200002641 | S.COL NLV25T-R15J | T | 95/81 |
| L452 | 6200003261 | S.COL NLV32T-101J | T | 87/78 |
| L501 | 6200001831 | S.COL NLV32T-100J | T | 31/125.8 |
| L530 | 6200003171 | S.COL NLV32T-330J | T | 14.6/134.9 |
| L531 | 6200003171 | S.COL NLV32T-330J | T | 14.6/130.8 |
| L532 | 6200003171 | S.COL NLV32T-330J | T | 15.5/127.1 |
| L541 | 6200010790 | S.COL C2520C-3R9G-A | T | 56.3/139.6 |
| L542 | 6190001421 | COL #E526GN-110502 | | |
| L543 | 6200010790 | S.COL C2520C-3R9G-A | T | 68.4/147.9 |
| L544 | 6200003261 | S.COL NLV32T-101J | B | 65.9/142.1 |
| L545 | 6200003261 | S.COL NLV32T-101J | B | 51.3/139.6 |
| L561 | 6200003261 | S.COL NLV32T-101J | B | 64/156 |
| L562 | 6200001831 | S.COL NLV32T-100J | B | 74.6/151.8 |
| L565 | 6150004250 | COL LS-471A (C-14922) | | |
| L566 | 6150004250 | COL LS-471A (C-14922) | | |
| L591 | 6200007790 | S.COL LQW2BHNR15J03L | T | 60.5/171.5 |
| L601 | 6200001831 | S.COL NLV32T-100J | T | 49.5/123.6 |
| L602 | 6200002641 | S.COL NLV25T-R15J | T | 54.1/118 |
| L603 | 6200002841 | S.COL NLV25T-R22J | T | 57.1/117.2 |
| L651 | 6200001831 | S.COL NLV32T-100J | T | 15.5/176.2 |
| L681 | 6200002981 | S.COL NLV32T-R56J | T | 37.4/176.2 |
| L682 | 6200003041 | S.COL NLV32T-R68J | T | 37.8/172.6 |
| L683 | 6200003051 | S.COL NLV32T-R82J | T | 40.2/166.2 |
| L701 | 6200003261 | S.COL NLV32T-101J | T | 23.6/120 |
| L702 | 6150004971 | S.COL LS-522-LF | T | 37.6/108.6 |
| L703 | 6150004971 | S.COL LS-522-LF | T | 37.5/118.5 |
| L1001 | 6190001650 | COL ELC06D102E | | |
| L1002 | 6140004400 | COL LR-499 | | |
| L1004 | 6140003890 | COL LR-488 | | |
| L1005 | 6180001000 | COL LAL 04NA 102K | | |
| L1006 | 6140003900 | COL LR-489 | | |
| L1007 | 6140003800 | COL LR-439 | | |
| L1008 | 6190001650 | COL ELC06D102E | | |
| L1009 | 6190001650 | COL ELC06D102E | | |
| L1010 | 6140003880 | COL LR-486 | | |
| L1011 | 6140003880 | COL LR-486 | | |
| L1012 | 6140003800 | COL LR-439 | | |
| L1013 | 6200010680 | S.COL C2520C-R22G-A | T | 155/55.2 |
| L1014 | 6200010680 | S.COL C2520C-R22G-A | T | 157.9/12.4 |
| L1015 | 6200007790 | S.COL LQW2BHNR15J03L | B | 163.5/27.5 |
| L1052 | 6200010740 | S.COL C2520C-R27G-A | T | 177.8/74.6 |
| L1053 | 6200010740 | S.COL C2520C-R27G-A | T | 173.8/73.5 |
| L1054 | 6200010740 | S.COL C2520C-R27G-A | T | 169.4/72.6 |
| L1055 | 6140003960 | COL LR-495 | | |
| L1056 | 6200010730 | S.COL C2520C-68NG-A | T | 171/83.8 |
| L1058 | 6190001631 | COL #E544EN-100021 | | |
| L1060 | 6200010730 | S.COL C2520C-68NG-A | T | 149.1/76.4 |
| L1062 | 6200011450 | S.COL C2520C-R39G-A | T | 145.1/81.4 |
| L1063 | 6200010650 | S.COL C2520C-R12G-A | T | 140.9/82.5 |
| L1071 | 6200007780 | S.COL LQW2BHNR12J03L | B | 164.9/79.2 |
| L1072 | 6200007780 | S.COL LQW2BHNR12J03L | B | 168/76.1 |
| L1091 | 6200003950 | S.COL HF50ACC 322513-T | B | 171/149 |
| L1092 | 6200003950 | S.COL HF50ACC 322513-T | T | 149.7/136.5 |
| L1093 | 6200003950 | S.COL HF50ACC 322513-T | T | 157/135.2 |
| L1101 | 6140003920 | COL LR-491 | | |
| L1102 | 6200010650 | S.COL C2520C-R12G-A | T | 176.9/117.9 |
| L1103 | 6180001250 | COL LAL 04NA 3R3K | | |
| L1104 | 6200010870 | S.COL C2520C-R33G-A | T | 178.3/135.9 |
| L1105 | 6140003910 | COL LR-490 | | |
| L1151 | 6140004640 | COL LR-519 | | |
| L1201 | 6200007780 | S.COL LQW2BHNR12J03L | B | 119.3/17.4 |
| L1208 | 6140003800 | COL LR-439 | | |
| L1209 | 6200001831 | S.COL NLV32T-100J | T | 121.1/20.8 |
| L1210 | 6140004440 | COL LR-503 | | |
| L1211 | 6200009690 | S.COL LQH43CN101K03L | T | 115.7/34.6 |
| L1212 | 6200001831 | S.COL NLV32T-100J | T | 106.8/20.8 |
| L1213 | 6140004440 | COL LR-503 | | |
| L1214 | 6200009690 | S.COL LQH43CN101K03L | T | 105.9/34.8 |
| L1216 | 6140003800 | COL LR-439 | | |
| L1217 | 6200007750 | S.COL LQW2BHN56NJ03L | T | 147.9/63.7 |
| L1218 | 6200007770 | S.COL LQW2BHNR10J03L | T | 153.3/65.1 |
| L1219 | 6200007790 | S.COL LQW2BHNR15J03L | T | 153.2/68.4 |
| L1220 | 6140000930 | COL LR-116 | | |
| L1221 | 6200003261 | S.COL NLV32T-101J | B | 149.5/110.9 |
| L1222 | 6150001770 | COL LS-198 | | |
| L1223 | 6200007750 | S.COL LQW2BHN56NJ03L | B | 151.3/100.7 |
| L1228 | 6200010870 | S.COL C2520C-R33G-A | T | 158.7/71.3 |
| L1229 | 6200003950 | S.COL HF50ACC 322513-T | B | 164.7/115 |
| L1301 | 6200008090 | S.COL LQW2BHN68NJ03L | T | 157.1/111.9 |
| L1302 | 6200008090 | S.COL LQW2BHN68NJ03L | T | 156.4/115.5 |
| L1303 | 6200008090 | S.COL LQW2BHN68NJ03L | T | 153.4/117.5 |
| L1304 | 6200010870 | S.COL C2520C-R33G-A | T | 153.8/123 |
| L1305 | 6200003001 | S.COL NLV32T-R22J | T | 159.2/124.5 |
| L1306 | 6200001831 | S.COL NLV32T-100J | B | 152.7/118.6 |
| L1307 | 6200003001 | S.COL NLV32T-R22J | T | 153.3/112 |
| L1351 | 6200001831 | S.COL NLV32T-100J | T | 143/76.4 |
| L1353 | 6200010740 | S.COL C2520C-R27G-A | T | 141.6/67.5 |
| L1354 | 6200001831 | S.COL NLV32T-100J | T | 136.4/68 |
| L1401 | 6150004280 | COL LS-484B (C-14927) | | |
| L1402 | 6150004280 | COL LS-484B (C-14927) | | |
| L1403 | 6150004280 | COL LS-484B (C-14927) | | |

M.=Mounted side (T: Mounted on the Top side, B: Mounted on the Bottom side)
S.=Surface mount

## [RXPLL-B UNIT]

| REF NO. | ORDER NO. | DESCRIPTION | M. | H/V LOCATION |
|---|---|---|---|---|
| L1404 | 6150004280 | COL LS-484B (C-14927) | | |
| L1405 | 6200007770 | S.COL LQW2BHNR10J03L | B | 112.5/111.4 |
| L1406 | 6200007750 | S.COL LQW2BHN56NJ03L | B | 116.6/111.4 |
| L1407 | 6140003930 | COL LR-492 | | |
| L1408 | 6190001621 | COL #E544EN-100028 | | |
| L1409 | 6200003191 | S.COL NLV32T-470J | B | 135.8/125.4 |
| L1410 | 6150004280 | COL LS-484B (C-14927) | | |
| L1411 | 6150004280 | COL LS-484B (C-14927) | | |
| L1501 | 6200003520 | S.COL ELJFB 102K-F | T | 142.1/145.1 |
| L1652 | 6200002520 | S.COL ELJNC R18K-F | T | 112.9/133.1 |
| L1653 | 6200001831 | S.COL NLV32T-100J | B | 105.4/124.6 |
| L1654 | 6200001831 | S.COL NLV32T-100J | B | 112.4/141.9 |
| L1655 | 6200001831 | S.COL NLV32T-100J | B | 124.7/139.8 |
| L1701 | 6200001831 | S.COL NLV32T-100J | T | 167/160 |
| L1702 | 6200003950 | S.COL HF50ACC 322513-T | T | 175.6/169.8 |
| L1703 | 6200003950 | S.COL HF50ACC 322513-T | T | 172.6/169.8 |
| L1704 | 6200003950 | S.COL HF50ACC 322513-T | T | 169.6/169.8 |
| L1705 | 6200003950 | S.COL HF50ACC 322513-T | T | 165.5/169.8 |
| L1803 | 6200003950 | S.COL HF50ACC 322513-T | B | 132/54.8 |
| L1804 | 6200003950 | S.COL HF50ACC 322513-T | B | 118/154.8 |
| L1805 | 6200003950 | S.COL HF50ACC 322513-T | B | 155.2/132 |
| L1807 | 6200003950 | S.COL HF50ACC 322513-T | B | 118/151.3 |
| L1808 | 6200003950 | S.COL HF50ACC 322513-T | B | 141.3/162 |
| L1809 | 6200003950 | S.COL HF50ACC 322513-T | B | 149.5/115.6 |
| | | | | |
| R1 | 7030005871 | S.RES ERA3YKD 104V (100 k) | T | 32.5/19.2 |
| R2 | 7030005321 | S.RES ERA3YED 103V (10 k) | T | 31.2/19.2 |
| R3 | 7030003550 | S.RES ERJ3GEYJ 822 V (8.2 k) | T | 16.9/23.5 |
| R4 | 7030003550 | S.RES ERJ3GEYJ 822 V (8.2 k) | T | 16.9/24.8 |
| R5 | 7030003550 | S.RES ERJ3GEYJ 822 V (8.2 k) | T | 13.3/31.3 |
| R6 | 7030003550 | S.RES ERJ3GEYJ 822 V (8.2 k) | T | 13.3/30 |
| R7 | 7030003500 | S.RES ERJ3GEYJ 332 V (3.3 k) | B | 26.7/12.9 |
| R8 | 7030003470 | S.RES ERJ3GEYJ 182 V (1.8 k) | B | 28.2/14.6 |
| R9 | 7030003680 | S.RES ERJ3GEYJ 104 V (100 k) | B | 27.5/10.6 |
| R10 | 7030003360 | S.RES ERJ3GEYJ 221 V (220) | T | 19/16 |
| R11 | 7030003360 | S.RES ERJ3GEYJ 221 V (220) | T | 20.3/16 |
| R12 | 7030003360 | S.RES ERJ3GEYJ 221 V (220) | T | 22.4/16 |
| R13 | 7030003360 | S.RES ERJ3GEYJ 221 V (220) | T | 23.7/16 |
| R14 | 7030003360 | S.RES ERJ3GEYJ 221 V (220) | T | 25/16 |
| R15 | 7030003360 | S.RES ERJ3GEYJ 221 V (220) | T | 26.4/16.2 |
| R16 | 7030003360 | S.RES ERJ3GEYJ 221 V (220) | T | 32.5/15.4 |
| R17 | 7030003360 | S.RES ERJ3GEYJ 221 V (220) | T | 33.8/15.4 |
| R30 | 7030003240 | S.RES ERJ3GEYJ 220 V (22) | T | 21.7/113.7 |
| R31 | 7030003600 | S.RES ERJ3GEYJ 223 V (22 k) | T | 20.4/111.1 |
| R32 | 7030003320 | S.RES ERJ3GEYJ 101 V (100) | T | 23/113.7 |
| R33 | 7030003340 | S.RES ERJ3GEYJ 151 V (150) | T | 19.1/115 |
| R51 | 7030011030 | S.RES ERJ1TYJ 270U (27) | T | 66.3/13.9 |
| R61 | 7030011030 | S.RES ERJ1TYJ 270U (27) | T | 45.1/13.9 |
| R101 | 7030003800 | S.RES ERJ3GEYJ 105 V (1 M) | T | 34.1/101.5 |
| R102 | 7030003860 | S.RES ERJ3GE JPW V | B | 35.6/88.6 |
| R103 | 7030007230 | S.RES ERA3YED 102V (1 k) | T | 25.1/100.3 |
| R104 | 7030007230 | S.RES ERA3YED 102V (1 k) | T | 26.4/100.3 |
| R105 | 7030007230 | S.RES ERA3YED 102V (1 k) | T | 27.8/100.3 |
| R106 | 7030003360 | S.RES ERJ3GEYJ 221 V (220) | T | 29.1/100.3 |
| R107 | 7030003320 | S.RES ERJ3GEYJ 101 V (100) | T | 38/101.5 |
| R108 | 7030007230 | S.RES ERA3YED 102V (1 k) | T | 28.9/79 |
| R109 | 7030007230 | S.RES ERA3YED 102V (1 k) | T | 41.9/84.5 |
| R110 | 7030007220 | S.RES ERA3YED 202V (2 k) | T | 14.6/100.5 |
| R111 | 7030007220 | S.RES ERA3YED 202V (2 k) | T | 17.2/100.5 |
| R112 | 7030007220 | S.RES ERA3YED 202V (2 k) | T | 17.2/99.2 |
| R113 | 7030007220 | S.RES ERA3YED 202V (2 k) | T | 17.2/97.9 |
| R114 | 7030007220 | S.RES ERA3YED 202V (2 k) | T | 17.2/96.6 |
| R115 | 7030007220 | S.RES ERA3YED 202V (2 k) | T | 17.2/95.2 |
| R116 | 7030007220 | S.RES ERA3YED 202V (2 k) | T | 17.2/93.9 |
| R117 | 7030007220 | S.RES ERA3YED 202V (2 k) | T | 17.2/92.6 |
| R118 | 7030007200 | S.RES ERA3YEB 202V (2 k) | T | 17.2/91.3 |
| R119 | 7030007200 | S.RES ERA3YEB 202V (2 k) | T | 17.2/89.6 |
| R120 | 7030007200 | S.RES ERA3YEB 202V (2 k) | T | 17.2/87 |
| R121 | 7030007200 | S.RES ERA3YEB 202V (2 k) | T | 17.2/84.4 |
| R122 | 7030007200 | S.RES ERA3YEB 202V (2 k) | T | 17.2/81.8 |
| R123 | 7030007230 | S.RES ERA3YED 102V (1 k) | T | 14.6/99.2 |
| R124 | 7030007230 | S.RES ERA3YED 102V (1 k) | T | 14.6/97.9 |
| R125 | 7030007230 | S.RES ERA3YED 102V (1 k) | T | 14.6/96.6 |
| R126 | 7030007230 | S.RES ERA3YED 102V (1 k) | T | 14.6/95.2 |
| R127 | 7030007230 | S.RES ERA3YED 102V (1 k) | T | 14.6/93.9 |
| R128 | 7030007230 | S.RES ERA3YED 102V (1 k) | T | 14.6/92.6 |
| R129 | 7030007210 | S.RES ERA3YEB 102V (1 k) | T | 14.6/91.3 |
| R130 | 7030007210 | S.RES ERA3YEB 102V (1 k) | T | 14.6/89.6 |
| R131 | 7030007210 | S.RES ERA3YEB 102V (1 k) | T | 14.6/88.3 |
| R132 | 7030007210 | S.RES ERA3YEB 102V (1 k) | T | 14.6/87 |
| R133 | 7030007210 | S.RES ERA3YEB 102V (1 k) | T | 14.6/85.7 |
| R134 | 7030009861 | S.RES ERA3YED 471V (470) | T | 14.6/84.4 |
| R135 | 7030003860 | S.RES ERJ3GE JPW V | T | 30.4/75.8 |
| R136 | 7030003800 | S.RES ERJ3GEYJ 105 V (1 M) | T | 33/77.1 |
| R137 | 7030003200 | S.RES ERJ3GEYJ 100 V (10) | T | 35.5/75.8 |
| R138 | 7030003860 | S.RES ERJ3GE JPW V | T | 16.8/78.6 |
| R139 | 7030003860 | S.RES ERJ3GE JPW V | T | 17.6/75.8 |
| R150 | 7030003330 | S.RES ERJ3GEYJ 121 V (120) | B | 37.8/86.2 |
| R151 | 7030003220 | S.RES ERJ3GEYJ 150 V (15) | B | 38.6/88.1 |
| R152 | 7030005871 | S.RES ERA3YKD 104V (100 k) | B | 36.2/82.5 |
| R153 | 7030005321 | S.RES ERA3YED 103V (10 k) | T | 19.2/62.7 |

## [RXPLL-B UNIT]

| REF NO. | ORDER NO. | DESCRIPTION | M. | H/V LOCATION |
|---|---|---|---|---|
| R154 | 7030003320 | S.RES ERJ3GEYJ 101 V (100) | B | 26.3/54.1 |
| R155 | 7030003350 | S.RES ERJ3GEYJ 181 V (180) | B | 23/54.1 |
| R156 | 7030005871 | S.RES ERA3YKD 104V (100 k) | T | 24.6/53.1 |
| R157 | 7030005871 | S.RES ERA3YKD 104V (100 k) | T | 26.9/58 |
| R158 | 7030003340 | S.RES ERJ3GEYJ 151 V (150) | T | 30/57.3 |
| R159 | 7030003320 | S.RES ERJ3GEYJ 101 V (100) | B | 33.6/61.4 |
| R160 | 7030003360 | S.RES ERJ3GEYJ 221 V (220) | B | 33.6/59.6 |
| R161 | 7030003640 | S.RES ERJ3GEYJ 473 V (47 k) | B | 33.6/54.8 |
| R163 | 7030003220 | S.RES ERJ3GEYJ 150 V (15) | B | 30.2/56.6 |
| R164 | 7030003310 | S.RES ERJ3GEYJ 820 V (82) | B | 34.1/70.4 |
| R165 | 7030003320 | S.RES ERJ3GEYJ 101 V (100) | B | 30.8/70.4 |
| R166 | 7030003320 | S.RES ERJ3GEYJ 101 V (100) | B | 30.8/72.2 |
| R167 | 7030003240 | S.RES ERJ3GEYJ 220 V (22) | B | 37.4/75.8 |
| R168 | 7030003360 | S.RES ERJ3GEYJ 221 V (220) | B | 34.1/75.8 |
| R169 | 7030003640 | S.RES ERJ3GEYJ 473 V (47 k) | B | 30.8/75.8 |
| R202 | 7030007230 | S.RES ERA3YED 102V (1 k) | T | 22.2/39.7 |
| R203 | 7030007230 | S.RES ERA3YED 102V (1 k) | T | 22.2/38.4 |
| R204 | 7030003360 | S.RES ERJ3GEYJ 221 V (220) | T | 22.2/37.1 |
| R205 | 7030005321 | S.RES ERA3YED 103V (10 k) | T | 27.4/34 |
| R206 | 7030003220 | S.RES ERJ3GEYJ 150 V (15) | T | 31.1/45.7 |
| R210 | 7030005351 | S.RES ERA3YED 182V (1.8 k) | T | 35.6/37.5 |
| R217 | 7030009651 | S.RES ERA3YHD 820V (82) | B | 40.4/42.8 |
| R219 | 7030009691 | S.RES ERA3YED 101V (100) | B | 40/35.7 |
| R220 | 7030005871 | S.RES ERA3YKD 104V (100 k) | T | 73.2/37.6 |
| R221 | 7030005871 | S.RES ERA3YKD 104V (100 k) | T | 72.3/30.9 |
| R222 | 7030003360 | S.RES ERJ3GEYJ 221 V (220) | T | 81.4/38.3 |
| R223 | 7030007230 | S.RES ERA3YED 102V (1 k) | T | 81.9/31.9 |
| R224 | 7030003320 | S.RES ERJ3GEYJ 101 V (100) | T | 73.2/40.2 |
| R230 | 7030005871 | S.RES ERA3YKD 104V (100 k) | T | 73.2/50.1 |
| R231 | 7030005871 | S.RES ERA3YKD 104V (100 k) | T | 72.3/43.3 |
| R232 | 7030003360 | S.RES ERJ3GEYJ 221 V (220) | T | 81.4/50.8 |
| R233 | 7030007230 | S.RES ERA3YED 102V (1 k) | T | 81.9/44.4 |
| R234 | 7030003320 | S.RES ERJ3GEYJ 101 V (100) | T | 73.2/52.7 |
| R240 | 7030005871 | S.RES ERA3YKD 104V (100 k) | T | 73.2/62.6 |
| R241 | 7030005871 | S.RES ERA3YKD 104V (100 k) | T | 72.3/55.8 |
| R242 | 7030003360 | S.RES ERJ3GEYJ 221 V (220) | T | 81.4/63.3 |
| R243 | 7030007230 | S.RES ERA3YED 102V (1 k) | T | 81.9/56.9 |
| R244 | 7030003320 | S.RES ERJ3GEYJ 101 V (100) | T | 73.2/65.2 |
| R250 | 7030005871 | S.RES ERA3YKD 104V (100 k) | T | 73.2/75.1 |
| R251 | 7030005871 | S.RES ERA3YKD 104V (100 k) | T | 72.3/68.4 |
| R252 | 7030003360 | S.RES ERJ3GEYJ 221 V (220) | T | 81.4/75.8 |
| R253 | 7030007230 | S.RES ERA3YED 102V (1 k) | T | 81.9/69.4 |
| R254 | 7030003320 | S.RES ERJ3GEYJ 101 V (100) | T | 73.2/77.7 |
| R260 | 7030005871 | S.RES ERA3YKD 104V (100 k) | T | 73.2/87.6 |
| R261 | 7030005871 | S.RES ERA3YKD 104V (100 k) | T | 72.3/80.9 |
| R262 | 7030003360 | S.RES ERJ3GEYJ 221 V (220) | T | 81.4/88.3 |
| R263 | 7030007230 | S.RES ERA3YED 102V (1 k) | T | 81.9/81.9 |
| R264 | 7030003320 | S.RES ERJ3GEYJ 101 V (100) | T | 73.2/90.2 |
| R270 | 7030005871 | S.RES ERA3YKD 104V (100 k) | T | 73.2/99.5 |
| R271 | 7030005871 | S.RES ERA3YKD 104V (100 k) | T | 72.3/92.8 |
| R272 | 7030003360 | S.RES ERJ3GEYJ 221 V (220) | T | 81.4/100.8 |
| R273 | 7030007230 | S.RES ERA3YED 102V (1 k) | T | 81.9/93.9 |
| R274 | 7030003320 | S.RES ERJ3GEYJ 101 V (100) | T | 73.2/102.1 |
| R301 | 7030003200 | S.RES ERJ3GEYJ 100 V (10) | T | 86.5/30.6 |
| R302 | 7030007230 | S.RES ERA3YED 102V (1 k) | T | 86.5/29.3 |
| R303 | 7030003360 | S.RES ERJ3GEYJ 221 V (220) | T | 92.1/28 |
| R304 | 7030003490 | S.RES ERJ3GEYJ 272 V (2.7 k) | T | 94/30.1 |
| R305 | 7030003510 | S.RES ERJ3GEYJ 392 V (3.9 k) | T | 95.3/30.1 |
| R306 | 7030003360 | S.RES ERJ3GEYJ 221 V (220) | T | 94.7/32.2 |
| R307 | 7030009841 | S.RES ERA3YHD 330V (33) | T | 92.1/32.2 |
| R308 | 7030009851 | S.RES ERA3YED 271V (270) | B | 92.6/43.4 |
| R309 | 7030003540 | S.RES ERJ3GEYJ 682 V (6.8 k) | B | 89.1/47 |
| R310 | 7030003500 | S.RES ERJ3GEYJ 332 V (3.3 k) | B | 92.6/47 |
| R311 | 7030003350 | S.RES ERJ3GEYJ 181 V (180) | B | 89.1/45.2 |
| R312 | 7030003360 | S.RES ERJ3GEYJ 221 V (220) | B | 92.4/27.8 |
| R313 | 7030003490 | S.RES ERJ3GEYJ 272 V (2.7 k) | B | 91.1/23.1 |
| R314 | 7030003510 | S.RES ERJ3GEYJ 392 V (3.9 k) | B | 88.3/23.1 |
| R315 | 7030003360 | S.RES ERJ3GEYJ 221 V (220) | B | 87.5/25.1 |
| R316 | 7030003280 | S.RES ERJ3GEYJ 470 V (47) | B | 78.3/26.1 |
| R317 | 7030006220 | S.RES ERJ12YJ470U (47) | B | 90/31.4 |
| R318 | 7030009841 | S.RES ERA3YHD 330V (33) | B | 92.6/41.6 |
| R341 | 7030007230 | S.RES ERA3YED 102V (1 k) | T | 92.1/40.1 |
| R342 | 7030005321 | S.RES ERA3YED 103V (10 k) | T | 86.5/32.2 |
| R343 | 7030007230 | S.RES ERA3YED 102V (1 k) | T | 89.3/34.8 |
| R351 | 7030003200 | S.RES ERJ3GEYJ 100 V (10) | B | 89.1/52.4 |
| R352 | 7030010980 | S.RES ERA3YHD 470V (47) | T | 89.3/55.8 |
| R353 | 7030009591 | S.RES ERA3YED 472V (4.7 k) | T | 89.3/54.5 |
| R354 | 7030009591 | S.RES ERA3YED 472V (4.7 k) | T | 89.3/50.4 |
| R355 | 7030009591 | S.RES ERA3YED 472V (4.7 k) | T | 89.3/53.2 |
| R356 | 7030003320 | S.RES ERJ3GEYJ 101 V (100) | T | 89.3/57.1 |
| R357 | 7310005050 | S.TRI RH03ADCS3X (4.7 k) | T | 93.6/52.7 |
| R358 | 7030010980 | S.RES ERA3YHD 470V (47) | T | 94.9/56.4 |
| R359 | 7030003320 | S.RES ERJ3GEYJ 101 V (100) | T | 94.9/59 |
| R360 | 7030003320 | S.RES ERJ3GEYJ 101 V (100) | B | 92.6/63.9 |
| R361 | 7030003490 | S.RES ERJ3GEYJ 272 V (2.7 k) | B | 89.2/62.1 |
| R362 | 7030003510 | S.RES ERJ3GEYJ 392 V (3.9 k) | B | 92.6/60.3 |
| R363 | 7030003320 | S.RES ERJ3GEYJ 101 V (100) | B | 92.6/65.7 |
| R364 | 7030003410 | S.RES ERJ3GEYJ 561 V (560) | T | 94.9/82.9 |
| R365 | 7030007860 | S.RES ERJ3GEYJ 8R2V (8.2) | T | 92/83.4 |
| R366 | 7030003410 | S.RES ERJ3GEYJ 561 V (560) | T | 94.9/84.2 |
| R368 | 7030005321 | S.RES ERA3YED 103V (10 k) | T | 86.1/59.6 |
| R369 | 7030008240 | S.RES ERJ12YJ0R00U | B | 95.3/57.1 |

M.=Mounted side (T: Mounted on the Top side, B: Mounted on the Bottom side)
S.=Surface mount

## [RXPLL-B UNIT]

| REF NO. | ORDER NO. | DESCRIPTION | M. | H/V LOCATION |
|---|---|---|---|---|
| R421 | 7030007230 | S.RES ERA3YED 102V (1 k) | T | 92.1/87.8 |
| R425 | 7030003410 | S.RES ERJ3GEYJ 561 V (560) | T | 90.1/81.6 |
| R427 | 7030003320 | S.RES ERJ3GEYJ 101 V (100) | B | 86.8/87.3 |
| R428 | 7030009861 | S.RES ERA3YED 471V (470) | B | 92.1/88 |
| R441 | 7030007230 | S.RES ERA3YED 102V (1 k) | T | 92.1/75.5 |
| R442 | 7030005321 | S.RES ERA3YED 103V (10 k) | T | 88.9/70.9 |
| R443 | 7030007230 | S.RES ERA3YED 102V (1 k) | T | 88.9/72.2 |
| R501 | 7030003360 | S.RES ERJ3GEYJ 221 V (220) | T | 29.2/153.1 |
| R502 | 7030007230 | S.RES ERA3YED 102V (1 k) | T | 27.9/153.1 |
| R503 | 7030007230 | S.RES ERA3YED 102V (1 k) | T | 26.5/153.1 |
| R504 | 7030007230 | S.RES ERA3YED 102V (1 k) | T | 25.2/153.1 |
| R506 | 7030003800 | S.RES ERJ3GEYJ 105 V (1 M) | T | 34/154.5 |
| R509 | 7030007230 | S.RES ERA3YED 102V (1K) | T | 42.5/136 |
| R510 | 7030007220 | S.RES ERA3YED 202V (2 k) | T | 14.6/153.6 |
| R511 | 7030007220 | S.RES ERA3YED 202V (2 k) | T | 17.2/153.6 |
| R512 | 7030007220 | S.RES ERA3YED 202V (2 k) | T | 17.2/152.3 |
| R513 | 7030007220 | S.RES ERA3YED 202V (2 k) | T | 17.2/151 |
| R514 | 7030007220 | S.RES ERA3YED 202V (2 k) | T | 17.2/149.7 |
| R515 | 7030007220 | S.RES ERA3YED 202V (2 k) | T | 17.2/148.3 |
| R516 | 7030007220 | S.RES ERA3YED 202V (2 k) | T | 17.2/147 |
| R517 | 7030007220 | S.RES ERA3YED 202V (2 k) | T | 17.2/145.7 |
| R518 | 7030007200 | S.RES ERA3YEB 202V (2 k) | T | 17.2/144.4 |
| R519 | 7030007200 | S.RES ERA3YEB 202V (2 k) | T | 17.2/142.7 |
| R520 | 7030007200 | S.RES ERA3YEB 202V (2 k) | T | 17.2/141.4 |
| R521 | 7030007200 | S.RES ERA3YEB 202V (2 k) | T | 17.2/140.1 |
| R522 | 7030007200 | S.RES ERA3YEB 202V (2 k) | T | 17.2/138.8 |
| R523 | 7030007230 | S.RES ERA3YED 102V (1 k) | T | 14.6/152.3 |
| R524 | 7030007230 | S.RES ERA3YED 102V (1 k) | T | 14.6/151 |
| R525 | 7030007230 | S.RES ERA3YED 102V (1 k) | T | 14.6/149.7 |
| R526 | 7030007230 | S.RES ERA3YED 102V (1 k) | T | 14.6/148.3 |
| R527 | 7030007230 | S.RES ERA3YED 102V (1 k) | T | 14.6/147 |
| R528 | 7030007230 | S.RES ERA3YED 102V (1 k) | T | 14.6/145.7 |
| R529 | 7030007210 | S.RES ERA3YEB 102V (1 k) | T | 14.6/144.4 |
| R530 | 7030007210 | S.RES ERA3YEB 102V (1 k) | T | 14.6/142.7 |
| R531 | 7030007210 | S.RES ERA3YEB 102V (1 k) | T | 14.6/141.4 |
| R532 | 7030007210 | S.RES ERA3YEB 102V (1 k) | T | 14.6/140.1 |
| R533 | 7030007210 | S.RES ERA3YEB 102V (1 k) | T | 14.6/138.8 |
| R534 | 7030003860 | S.RES ERJ3GE JPW V | T | 22.2/127.6 |
| R535 | 7030003800 | S.RES ERJ3GEYJ 105 V (1 M) | T | 24.8/129.8 |
| R536 | 7030003200 | S.RES ERJ3GEYJ 100 V (10) | T | 28/128.3 |
| R537 | 7030007230 | S.RES ERA3YED 102V (1 k) | T | 30.3/131.9 |
| R538 | 7030003360 | S.RES ERJ3GEYJ 221 V (220) | B | 34.8/146.5 |
| R540 | 7030007230 | S.RES ERA3YED 102V (1 k) | B | 52.3/142.8 |
| R544 | 7030005871 | S.RES ERA3YKD 104V (100 k) | T | 69.4/140.4 |
| R545 | 7030005871 | S.RES ERA3YKD 104V (100 k) | T | 69.4/139.1 |
| R546 | 7030009861 | S.RES ERA3YED 471V (470) | T | 67.4/150.7 |
| R548 | 7030009591 | S.RES ERA3YED 472V (4.7 k) | B | 43.4/136.5 |
| R550 | 7030009691 | S.RES ERA3YED 101V (100) | B | 43.4/134.7 |
| R554 | 7030009891 | S.RES ERA3YED 151V (150) | B | 47.2/133.9 |
| R555 | 7030003380 | S.RES ERJ3GEYJ 331 V (330) | B | 61.9/142.1 |
| R556 | 7030005981 | S.RES ERA3YED 333V (33 k) | B | 44.2/128.2 |
| R561 | 7030003200 | S.RES ERJ3GEYJ 100 V (10) | T | 71.3/148.5 |
| R562 | 7030003360 | S.RES ERJ3GEYJ 221 V (220) | T | 65.7/155.5 |
| R563 | 7030003490 | S.RES ERJ3GEYJ 272 V (2.7 k) | T | 70.4/151.9 |
| R564 | 7030003510 | S.RES ERJ3GEYJ 392 V (3.9 k) | T | 70.4/150.6 |
| R565 | 7030003360 | S.RES ERJ3GEYJ 221 V (220) | T | 67/155.5 |
| R570 | 7030003230 | S.RES ERJ3GEYJ 180 V (18) | T | 63.1/155.5 |
| R571 | 7030003230 | S.RES ERJ3GEYJ 180 V (18) | T | 58.5/155 |
| R572 | 7030003290 | S.RES ERJ3GEYJ 560 V (56) | B | 57.2/156.3 |
| R573 | 7030003270 | S.RES ERJ3GEYJ 390 V (39) | T | 61.8/155.5 |
| R574 | 7030003240 | S.RES ERJ3GEYJ 220 V (22) | T | 60.5/155.5 |
| R575 | 7030003270 | S.RES ERJ3GEYJ 390 V (39) | T | 58.5/156.3 |
| R580 | 7030009861 | S.RES ERA3YED 471V (470) | T | 41.9/153.7 |
| R581 | 7030003360 | S.RES ERJ3GEYJ 221 V (220) | T | 41.9/145.5 |
| R582 | 7030003600 | S.RES ERJ3GEYJ 223 V (22 k) | T | 41.9/149.5 |
| R587 | 7030003300 | S.RES ERJ3GEYJ 680 V (68) | T | 55.7/157.6 |
| R588 | 7030003340 | S.RES ERJ3GEYJ 151 V (150) | T | 58.5/158.9 |
| R589 | 7030003300 | S.RES ERJ3GEYJ 680 V (68) | T | 55.7/158.9 |
| R591 | 7030003320 | S.RES ERJ3GEYJ 101 V (100) | T | 58.2/169.9 |
| R592 | 7030005321 | S.RES ERA3YED 103V (10 k) | T | 58.5/167.9 |
| R593 | 7030003480 | S.RES ERJ3GEYJ 222 V (2.2 k) | T | 58.5/165.1 |
| R594 | 7030003320 | S.RES ERJ3GEYJ 101 V (100) | B | 61.9/168.1 |
| R595 | 7030003640 | S.RES ERJ3GEYJ 473 V (47 k) | B | 55.9/165.3 |
| R596 | 7030003540 | S.RES ERJ3GEYJ 682 V (6.8 k) | B | 54.7/168.9 |
| R601 | 7030009851 | S.RES ERA3YED 271V (270) | T | 51.7/118.2 |
| R602 | 7030003470 | S.RES ERJ3GEYJ 182 V (1.8 k) | T | 49.5/120.1 |
| R606 | 7030003360 | S.RES ERJ3GEYJ 221 V (220) | T | 45.3/115.6 |
| R607 | 7030003480 | S.RES ERJ3GEYJ 222 V (2.2 k) | T | 48.6/115.4 |
| R608 | 7030007230 | S.RES ERA3YED 102V (1 k) | T | 49.9/115.4 |
| R651 | 7030007230 | S.RES ERA3YED 102V (1 k) | B | 23.5/177.1 |
| R652 | 7030003360 | S.RES ERJ3GEYJ 221 V (220) | T | 13.5/170.8 |
| R653 | 7030007230 | S.RES ERA3YED 102V (1 k) | T | 13.5/169.5 |
| R654 | 7030007230 | S.RES ERA3YED 102V (1 k) | T | 13.5/168.2 |
| R656 | 7030003800 | S.RES ERJ3GEYJ 105 V (1 M) | T | 13.4/165.6 |
| R657 | 7030003320 | S.RES ERJ3GEYJ 101 V (100) | T | 20.2/161.4 |
| R661 | 7030007220 | S.RES ERA3YED 202V (2 k) | T | 31.7/162.8 |
| R662 | 7030007220 | S.RES ERA3YED 202V (2 k) | T | 31.7/164.1 |
| R663 | 7030007220 | S.RES ERA3YED 202V (2 k) | T | 31.7/165.4 |
| R664 | 7030007220 | S.RES ERA3YED 202V (2 k) | T | 31.7/166.7 |
| R665 | 7030007220 | S.RES ERA3YED 202V (2 k) | T | 31.7/168 |
| R666 | 7030007220 | S.RES ERA3YED 202V (2 k) | T | 31.7/169.3 |
| R667 | 7030007220 | S.RES ERA3YED 202V (2 k) | T | 31.7/170.6 |

## [RXPLL-B UNIT]

| REF NO. | ORDER NO. | DESCRIPTION | M. | H/V LOCATION |
|---|---|---|---|---|
| R668 | 7030007220 | S.RES ERA3YED 202V (2 k) | T | 31.7/171.9 |
| R669 | 7030007200 | S.RES ERA3YEB 202V (2 k) | T | 31.7/173.2 |
| R670 | 7030007200 | S.RES ERA3YEB 202V (2 k) | T | 31.7/174.5 |
| R671 | 7030007200 | S.RES ERA3YEB 202V (2 k) | T | 31.7/175.8 |
| R673 | 7030007230 | S.RES ERA3YED 102V (1 k) | T | 34.3/165.4 |
| R674 | 7030007230 | S.RES ERA3YED 102V (1 k) | T | 34.3/166.7 |
| R675 | 7030007230 | S.RES ERA3YED 102V (1 k) | T | 34.3/168 |
| R676 | 7030007230 | S.RES ERA3YED 102V (1 k) | T | 34.3/169.3 |
| R677 | 7030007230 | S.RES ERA3YED 102V (1 k) | T | 34.3/170.6 |
| R678 | 7030007230 | S.RES ERA3YED 102V (1 k) | T | 34.3/171.9 |
| R679 | 7030007210 | S.RES ERA3YEB 102V (1 k) | T | 34.3/173.2 |
| R680 | 7030007210 | S.RES ERA3YEB 102V (1 k) | T | 34.3/174.5 |
| R681 | 7030007210 | S.RES ERA3YEB 102V (1 k) | T | 34.3/175.8 |
| R683 | 7030003860 | S.RES ERJ3GE JPW V | B | 58.4/167.8 |
| R685 | 7030003460 | S.RES ERJ3GEYJ 152 V (1.5 k) | T | 38.4/169.7 |
| R686 | 7030003320 | S.RES ERJ3GEYJ 101 V (100) | T | 40.3/163.4 |
| R687 | 7030003470 | S.RES ERJ3GEYJ 182 V (1.8 k) | T | 37.4/165.1 |
| R688 | 7030003480 | S.RES ERJ3GEYJ 222 V (2.2 k) | T | 34.3/162.8 |
| R689 | 7030003360 | S.RES ERJ3GEYJ 221 V (220) | T | 33.6/161.5 |
| R690 | 7030009851 | S.RES ERA3YED 271V (270) | T | 46.4/165.3 |
| R691 | 7030003230 | S.RES ERJ3GEYJ 180 V (18) | T | 48.4/164.8 |
| R692 | 7030009851 | S.RES ERA3YED 271V (270) | T | 46.4/166.6 |
| R693 | 7030003360 | S.RES ERJ3GEYJ 221 V (220) | T | 37.1/169.7 |
| R704 | 7030009841 | S.RES ERA3YHD 330V (33) | T | 30.8/113.7 |
| R705 | 7030003600 | S.RES ERJ3GEYJ 223 V (22 k) | T | 29.5/113.7 |
| R706 | 7030005321 | S.RES ERA3YED 103V (10 k) | T | 28.2/113.7 |
| R707 | 7030009861 | S.RES ERA3YED 471V (470) | T | 30.8/108.1 |
| R708 | 7030003410 | S.RES ERJ3GEYJ 561 V (560) | T | 43.3/118.8 |
| R709 | 7030007860 | S.RES ERJ3GEYJ 8R2V (8.2) | T | 43.3/116 |
| R710 | 7030003410 | S.RES ERJ3GEYJ 561 V (560) | T | 43.8/121.1 |
| R711 | 7030003320 | S.RES ERJ3GEYJ 101 V (100) | T | 37.9/154.5 |
| R1000 | 7030003320 | S.RES ERJ3GEYJ 101 V (100) | B | 177.1/11.2 |
| R1003 | 7030010980 | S.RES ERA3YHD 470V (47) | T | 162/13.4 |
| R1004 | 7030007230 | S.RES ERA3YED 102V (1 k) | B | 166.4/12.9 |
| R1005 | 7030003550 | S.RES ERJ3GEYJ 822 V (8.2 k) | T | 144/26.1 |
| R1006 | 7030007230 | S.RES ERA3YED 102V (1 k) | T | 145.3/26.1 |
| R1007 | 7030004030 | S.RES ERJ3GEYJ 5R6 V (5.6) | B | 153.7/33.6 |
| R1008 | 7030003240 | S.RES ERJ3GEYJ 220 V (22) | T | 144/36.4 |
| R1009 | 7030010980 | S.RES ERA3YHD 470V (47) | T | 182.4/29.3 |
| R1010 | 7030010980 | S.RES ERA3YHD 470V (47) | T | 154.5/33.2 |
| R1013 | 7030007230 | S.RES ERA3YED 102V (1 k) | B | 172.7/40.8 |
| R1014 | 7030007230 | S.RES ERA3YED 102V (1 k) | B | 156.7/40.8 |
| R1015 | 7030003530 | S.RES ERJ3GEYJ 562 V (5.6 k) | B | 172.7/45.4 |
| R1016 | 7030003530 | S.RES ERJ3GEYJ 562 V (5.6 k) | B | 156.7/45.4 |
| R1017 | 7030003530 | S.RES ERJ3GEYJ 562 V (5.6 k) | B | 169.7/12.9 |
| R1020 | 7030003390 | S.RES ERJ3GEYJ 391 V (390) | T | 179.6/18.3 |
| R1021 | 7030003220 | S.RES ERJ3GEYJ 150 V (15) | T | 177/19.4 |
| R1022 | 7030003390 | S.RES ERJ3GEYJ 391 V (390) | T | 180.9/19.4 |
| R1023 | 7030010980 | S.RES ERA3YHD 470V (47) | B | 149.3/33.5 |
| R1024 | 7030003200 | S.RES ERJ3GEYJ 100 V (10) | B | 150.1/31.4 |
| R1025 | 7030003300 | S.RES ERJ3GEYJ 680 V (68) | T | 178.3/19.4 |
| R1026 | 7030003480 | S.RES ERJ3GEYJ 222 V (2.2 k) | B | 171.2/14.2 |
| R1027 | 7030003200 | S.RES ERJ3GEYJ 100 V (10) | B | 176.5/38.3 |
| R1028 | 7030003200 | S.RES ERJ3GEYJ 100 V (10) | B | 160.5/38.3 |
| R1029 | 7030010980 | S.RES ERA3YHD 470V (47) | B | 178.2/46.1 |
| R1030 | 7030010980 | S.RES ERA3YHD 470V (47) | B | 162.2/46.1 |
| R1051 | 7030003800 | S.RES ERJ3GEYJ 105 V (1 M) | T | 178.6/93.1 |
| R1054 | 7030011500 | S.RES ERA3YHD 270V (27) | T | 149.1/83.2 |
| R1055 | 7030000010 | S.RES MCR10EZHJ JPW | T | 162.1/76.6 |
| R1056 | 7030000010 | S.RES MCR10EZHJ JPW | T | 177.5/71.1 |
| R1071 | 7030010980 | S.RES ERA3YHD 470V (47) | B | 165.9/76.4 |
| R1072 | 7030000010 | S.RES MCR10EZHJ JPW | T | 133.9/84.1 |
| R1073 | 7030000010 | S.RES MCR10EZHJ JPW | T | 135.5/85.7 |
| R1101 | 7310004860 | S.TRI EVM-3YSX50 B53 (502) | T | 180.1/90.2 |
| R1102 | 7030005871 | S.RES ERA3YKD 104V (100 k) | B | 180.2/100.6 |
| R1103 | 7030007680 | S.RES ERJ8ENF 47R0V (47) | T | 181.7/104.7 |
| R1104 | 7030007680 | S.RES ERJ8ENF 47R0V (47) | T | 173.6/107.2 |
| R1105 | 7030003500 | S.RES ERJ3GEYJ 332 V (3.3 k) | T | 176.7/87.7 |
| R1106 | 7030009620 | S.RES ERJ12YJ120U (12) | B | 179.6/117.9 |
| R1107 | 7030010980 | S.RES ERA3YHD 470V (47) | T | 175.6/120.3 |
| R1109 | 7030007180 | S.RES ERJ12YJ150U (15) | B | 176.5/125.7 |
| R1110 | 7030003480 | S.RES ERJ3GEYJ 222 V (2.2 k) | B | 168.5/131.6 |
| R1111 | 7030003480 | S.RES ERJ3GEYJ 222 V (2.2 k) | T | 166.2/130.4 |
| R1113 | 7030003480 | S.RES ERJ3GEYJ 222 V (2.2 k) | T | 166.2/131.7 |
| R1114 | 7030004040 | S.RES ERJ3GEYJ 4R7 V (4.7) | T | 179.2/125.3 |
| R1115 | 7030006240 | S.RES ERJ12YJ181U (180) | B | 176.5/129.9 |
| R1116 | 7030007230 | S.RES ERA3YED 102V (1 k) | T | 175.7/135.3 |
| R1117 | 7030004040 | S.RES ERJ3GEYJ 4R7 V (4.7) | T | 175.7/134 |
| R1118 | 7030003480 | S.RES ERJ3GEYJ 222 V (2.2 k) | T | 175.4/132 |
| R1119 | 7030003470 | S.RES ERJ3GEYJ 182 V (1.8 k) | T | 178/132 |
| R1120 | 7030006070 | S.RES ERJ12YJ101U (100) | B | 177.3/141 |
| R1121 | 7030003240 | S.RES ERJ3GEYJ 220 V (22) | T | 178.6/139.6 |
| R1122 | 7030010980 | S.RES ERA3YHD 470V (47) | T | 171.9/131.1 |
| R1123 | 7030003480 | S.RES ERJ3GEYJ 222 V (2.2 k) | T | 165.7/137.4 |
| R1124 | 7030003460 | S.RES ERJ3GEYJ 152 V (1.5 k) | T | 165.7/140 |
| R1125 | 7030003420 | S.RES ERJ3GEYJ 681 V (680) | B | 171/142.2 |
| R1126 | 7030003200 | S.RES ERJ3GEYJ 100 V (10) | T | 168.4/142.2 |
| R1127 | 7030010980 | S.RES ERA3YHD 470V (47) | T | 174.6/142.9 |
| R1128 | 7030003470 | S.RES ERJ3GEYJ 182 V (1.8 k) | T | 174.6/146.6 |
| R1129 | 7030003470 | S.RES ERJ3GEYJ 182 V (1.8 k) | T | 174.6/148.4 |
| R1130 | 7030003480 | S.RES ERJ3GEYJ 222 V (2.2 k) | T | 180.6/146.4 |
| R1131 | 7030003640 | S.RES ERJ3GEYJ 473 V (47 k) | B | 177.4/90.7 |

M.=Mounted side (T: Mounted on the Top side, B: Mounted on the Bottom side)
S.=Surface mount

## [RXPLL-B UNIT]

| REF NO. | ORDER NO. | DESCRIPTION | M. | H/V LOCATION |
|---|---|---|---|---|
| R1132 | 7310004860 | S.TRI EVM-3YSX50 B53 (502) | T | 179.4/84.3 |
| R1133 | 7030003500 | S.RES ERJ3GEYJ 332 V (3.3 k) | T | 175.5/82.5 |
| R1134 | 7030003640 | S.RES ERJ3GEYJ 473 V (47 k) | T | 175.5/83.8 |
| R1135 | 7030005871 | S.RES ERA3YKD 104V (100 k) | T | 182.2/97.8 |
| R1151 | 7030003280 | S.RES ERJ3GEYJ 470 V (47) | T | 134.8/63.9 |
| R1152 | 7030003280 | S.RES ERJ3GEYJ 470 V (47) | B | 117.2/56.3 |
| R1203 | 7030000010 | S.RES MCR10EZHJ JPW | T | 157.5/74.9 |
| R1211 | 7030003860 | S.RES ERJ3GE JPW V | T | 117.6/7.8 |
| R1212 | 7030003860 | S.RES ERJ3GE JPW V | T | 124.8/51.1 |
| R1213 | 7030003200 | S.RES ERJ3GEYJ 100 V (10) | B | 118.8/25 |
| R1214 | 7030003200 | S.RES ERJ3GEYJ 100 V (10) | B | 109/25 |
| R1216 | 7030010980 | S.RES ERA3YHD 470V (47) | B | 120.7/31.6 |
| R1217 | 7030010980 | S.RES ERA3YHD 470V (47) | B | 111.2/31.6 |
| R1220 | 7030010980 | S.RES ERA3YHD 470V (47) | T | 118.7/17.3 |
| R1221 | 7030007230 | S.RES ERA3YED 102V (1 k) | T | 116.4/39.9 |
| R1222 | 7030003530 | S.RES ERJ3GEYJ 562 V (5.6 k) | T | 116.4/38.6 |
| R1223 | 7030010980 | S.RES ERA3YHD 470V (47) | T | 109.3/17.1 |
| R1224 | 7030007230 | S.RES ERA3YED 102V (1 k) | T | 106.6/39.9 |
| R1225 | 7030003530 | S.RES ERJ3GEYJ 562 V (5.6 k) | T | 106.6/38.6 |
| R1226 | 7030003410 | S.RES ERJ3GEYJ 561 V (560) | T | 158.9/92.9 |
| R1227 | 7030003410 | S.RES ERJ3GEYJ 561 V (560) | T | 154/92.9 |
| R1228 | 7310004860 | S.TRI EVM-3YSX50 B53 (502) | T | 156.4/92.9 |
| R1229 | 7030003480 | S.RES ERJ3GEYJ 222 V (2.2 k) | B | 156.1/117.4 |
| R1230 | 7030003480 | S.RES ERJ3GEYJ 222 V (2.2 k) | B | 156.1/119.2 |
| R1231 | 7030003480 | S.RES ERJ3GEYJ 222 V (2.2 k) | B | 156.1/121 |
| R1232 | 7030003600 | S.RES ERJ3GEYJ 223 V (22 k) | T | 156.3/97.5 |
| R1233 | 7030010980 | S.RES ERA3YHD 470V (47) | B | 152.5/109.4 |
| R1301 | 7030010980 | S.RES ERA3YHD 470V (47) | B | 155.7/97.5 |
| R1302 | 7030003860 | S.RES ERJ3GE JPW V | T | 159.3/116.8 |
| R1304 | 7030003620 | S.RES ERJ3GEYJ 333 V (33 k) | T | 156.5/123.2 |
| R1306 | 7030006230 | S.RES ERJ12YJ151U (150) | B | 153.8/124.8 |
| R1307 | 7030003300 | S.RES ERJ3GEYJ 680 V (68) | T | 156.5/128.4 |
| R1311 | 7030000010 | S.RES MCR10EZHJ JPW | T | 140.3/98.8 |
| R1312 | 7030000010 | S.RES MCR10EZHJ JPW | T | 143.2/104.1 |
| R1313 | 7030000010 | S.RES MCR10EZHJ JPW | T | 143.2/101.5 |
| R1357 | 7030007230 | S.RES ERA3YED 102V (1 k) | B | 140.7/70.4 |
| R1358 | 7030003530 | S.RES ERJ3GEYJ 562 V (5.6 k) | B | 142.8/70.4 |
| R1359 | 7030010980 | S.RES ERA3YHD 470V (47) | T | 139.4/64.7 |
| R1360 | 7030007230 | S.RES ERA3YED 102V (1 k) | B | 146.4/67.1 |
| R1361 | 7030003380 | S.RES ERJ3GEYJ 331 V (330) | T | 139.3/68.8 |
| R1362 | 7030005871 | S.RES ERA3YKD 104V (100 k) | B | 144.6/70.4 |
| R1401 | 7030003200 | S.RES ERJ3GEYJ 100 V (10) | T | 131.5/103.3 |
| R1402 | 7030003300 | S.RES ERJ3GEYJ 680 V (68) | T | 126.4/111 |
| R1403 | 7030007230 | S.RES ERA3YED 102V (1 k) | T | 132/107.7 |
| R1404 | 7030009861 | S.RES ERA3YED 471V (470) | T | 134.6/104.3 |
| R1405 | 7030003340 | S.RES ERJ3GEYJ 151 V (150) | T | 137.2/104.3 |
| R1406 | 7030009591 | S.RES ERA3YED 472V (4.7 k) | T | 135.2/106.2 |
| R1407 | 7030003550 | S.RES ERJ3GEYJ 822 V (8.2 k) | B | 135.4/104.3 |
| R1408 | 7030003200 | S.RES ERJ3GEYJ 100 V (10) | T | 120.9/109 |
| R1409 | 7030009591 | S.RES ERA3YED 472V (4.7 k) | T | 120.5/114.9 |
| R1410 | 7030006091 | S.RES ERA3YED 822V (8.2 k) | B | 124.2/114.4 |
| R1411 | 7030005871 | S.RES ERA3YKD 104V (100 k) | T | 123.2/116.2 |
| R1412 | 7030003200 | S.RES ERJ3GEYJ 100 V (10) | T | 126.4/112.3 |
| R1413 | 7030003200 | S.RES ERJ3GEYJ 100 V (10) | T | 126.4/113.6 |
| R1414 | 7030005871 | S.RES ERA3YKD 104V (100 k) | B | 120.9/114.4 |
| R1415 | 7030010980 | S.RES ERA3YHD 470V (47) | T | 127/114.9 |
| R1416 | 7030003320 | S.RES ERJ3GEYJ 101 V (100) | B | 139.7/122.9 |
| R1417 | 7030000010 | S.RES MCR10EZHJ JPW | B | 130.1/124.5 |
| R1418 | 7030000010 | S.RES MCR10EZHJ JPW | B | 130.1/122.5 |
| R1419 | 7030003860 | S.RES ERJ3GE JPW V | B | 129.4/114.9 |
| R1501 | 7030010980 | S.RES ERA3YHD 470V (47) | T | 126.5/125.2 |
| R1502 | 7030009841 | S.RES ERA3YHD 330V (33) | T | 133/131 |
| R1503 | 7030009851 | S.RES ERA3YED 271V (270) | T | 130/146.3 |
| R1504 | 7030011050 | S.RES ERA3YHD 100V (10) | T | 131.3/143.5 |
| R1505 | 7030006091 | S.RES ERA3YED 822V (8.2 k) | B | 137.7/140.3 |
| R1506 | 7030007230 | S.RES ERA3YED 102V (1 k) | B | 137.7/147 |
| R1507 | 7030007230 | S.RES ERA3YED 102V (1 k) | T | 132.6/146.3 |
| R1508 | 7030007230 | S.RES ERA3YED 102V (1 k) | T | 133.9/146.3 |
| R1509 | 7030007230 | S.RES ERA3YED 102V (1 k) | T | 139.1/158.9 |
| R1510 | 7030005321 | S.RES ERA3YED 103V (10 k) | T | 139.1/157.6 |
| R1511 | 7030009861 | S.RES ERA3YED 471V (470) | T | 136.5/157.6 |
| R1512 | 7030003380 | S.RES ERJ3GEYJ 331 V (330) | T | 129.6/151.6 |
| R1513 | 7030003380 | S.RES ERJ3GEYJ 331 V (330) | T | 129.6/155.5 |
| R1514 | 7030005321 | S.RES ERA3YED 103V (10 k) | T | 129.6/160.8 |
| R1515 | 7030005321 | S.RES ERA3YED 103V (10 k) | T | 133.5/160.8 |
| R1516 | 7310005090 | S.TRI RH03ADC13X (1 k) | T | 119.2/157.7 |
| R1517 | 7030005321 | S.RES ERA3YED 103V (10 k) | T | 115.3/158 |
| R1518 | 7030005321 | S.RES ERA3YED 103V (10 k) | T | 134.8/160.8 |
| R1519 | 7030005321 | S.RES ERA3YED 103V (10 k) | T | 131.7/171.7 |
| R1520 | 7030005321 | S.RES ERA3YED 103V (10 k) | T | 136.1/160.8 |
| R1521 | 7030010980 | S.RES ERA3YHD 470V (47) | T | 126.5/133 |
| R1522 | 7030009841 | S.RES ERA3YHD 330V (33) | T | 126/141.1 |
| R1523 | 7030009851 | S.RES ERA3YED 271V (270) | T | 123.7/146.3 |
| R1524 | 7030011050 | S.RES ERA3YHD 100V (10) | T | 122.4/143.5 |
| R1525 | 7030007230 | S.RES ERA3YED 102V (1 k) | B | 128.8/147 |
| R1526 | 7030003460 | S.RES ERJ3GEYJ 152 V (1.5 k) | B | 137.7/142.1 |
| R1527 | 7030007230 | S.RES ERA3YED 102V (1 k) | T | 119.8/146.3 |
| R1528 | 7030007230 | S.RES ERA3YED 102V (1 k) | T | 121.1/146.3 |
| R1529 | 7030007230 | S.RES ERA3YED 102V (1 k) | T | 115.3/152.3 |
| R1530 | 7030003380 | S.RES ERJ3GEYJ 331 V (330) | T | 128/151.6 |
| R1531 | 7030003380 | S.RES ERJ3GEYJ 331 V (330) | T | 128/155.5 |
| R1532 | 7030005321 | S.RES ERA3YED 103V (10 k) | T | 124.1/160.8 |

## [RXPLL-B UNIT]

| REF NO. | ORDER NO. | DESCRIPTION | M. | H/V LOCATION |
|---|---|---|---|---|
| R1533 | 7030005321 | S.RES ERA3YED 103V (10 k) | T | 128/160.8 |
| R1534 | 7030005321 | S.RES ERA3YED 103V (10 k) | T | 122.8/160.8 |
| R1535 | 7030005321 | S.RES ERA3YED 103V (10 k) | T | 121.5/160.8 |
| R1536 | 7030005321 | S.RES ERA3YED 103V (10 k) | T | 129/171.7 |
| R1537 | 7030003320 | S.RES ERJ3GEYJ 101 V (100) | T | 115.5/164.5 |
| R1538 | 7030003320 | S.RES ERJ3GEYJ 101 V (100) | T | 107.1/170.1 |
| R1539 | 7030008061 | S.RES ERA3YED 222V (2.2 k) | B | 131.8/176.4 |
| R1540 | 7030010390 | S.RES ERA3YED 821V (820) | B | 128.7/177.1 |
| R1541 | 7030003320 | S.RES ERJ3GEYJ 101 V (100) | T | 107.1/178.8 |
| R1542 | 7030003320 | S.RES ERJ3GEYJ 101 V (100) | T | 115.5/173.2 |
| R1543 | 7030009691 | S.RES ERA3YED 101V (100) | B | 130.6/179 |
| R1651 | 7030003380 | S.RES ERJ3GEYJ 331 V (330) | B | 100.9/144.8 |
| R1652 | 7030003220 | S.RES ERJ3GEYJ 150 V (15) | B | 102.7/144.8 |
| R1653 | 7030003380 | S.RES ERJ3GEYJ 331 V (330) | B | 101.9/142.9 |
| R1654 | 7030010980 | S.RES ERA3YHD 470V (47) | B | 105.5/142.2 |
| R1655 | 7030009861 | S.RES ERA3YED 471V (470) | B | 108.8/140 |
| R1656 | 7030003630 | S.RES ERJ3GEYJ 393 V (39 k) | B | 108.3/142.2 |
| R1657 | 7030005871 | S.RES ERA3YKD 104V (100 k) | T | 108/133.1 |
| R1658 | 7030003320 | S.RES ERJ3GEYJ 101 V (100) | T | 110.6/133.1 |
| R1659 | 7030009691 | S.RES ERA3YED 101V (100) | T | 115.8/124.9 |
| R1660 | 7030009691 | S.RES ERA3YED 101V (100) | T | 115.8/128.7 |
| R1661 | 7030005321 | S.RES ERA3YED 103V (10 k) | T | 135.1/175.4 |
| R1662 | 7030005321 | S.RES ERA3YED 103V (10 k) | T | 135.2/172.8 |
| R1663 | 7030005321 | S.RES ERA3YED 103V (10 k) | T | 144.3/175.4 |
| R1664 | 7030005321 | S.RES ERA3YED 103V (10 k) | T | 139.9/172.1 |
| R1665 | 7030003320 | S.RES ERJ3GEYJ 101 V (100) | T | 109.3/133.1 |
| R1667 | 7030003360 | S.RES ERJ3GEYJ 221 V (220) | T | 139.2/170.2 |
| R1668 | 7030003360 | S.RES ERJ3GEYJ 221 V (220) | T | 141.8/170.2 |
| R1670 | 7030003800 | S.RES ERJ3GEYJ 105 V (1 M) | T | 140.2/164.1 |
| R1673 | 7030007230 | S.RES ERA3YED 102V (1 k) | B | 146/174.5 |
| R1674 | 7030009851 | S.RES ERA3YED 271V (270) | B | 145.1/177.1 |
| R1675 | 7030009591 | S.RES ERA3YED 472V (4.7 k) | T | 136.6/170.2 |
| R1677 | 7030009591 | S.RES ERA3YED 472V (4.7 k) | T | 143.1/170.2 |
| R1701 | 7030003360 | S.RES ERJ3GEYJ 221 V (220) | T | 162.4/147.4 |
| R1703 | 7030003360 | S.RES ERJ3GEYJ 221 V (220) | T | 159.8/147.4 |
| R1704 | 7030003360 | S.RES ERJ3GEYJ 221 V (220) | T | 158.5/147.4 |
| R1706 | 7030003360 | S.RES ERJ3GEYJ 221 V (220) | T | 155.9/147.4 |
| R1707 | 7030003360 | S.RES ERJ3GEYJ 221 V (220) | T | 154.6/147.4 |
| R1708 | 7030003360 | S.RES ERJ3GEYJ 221 V (220) | T | 153.3/147.4 |
| R1709 | 7030003480 | S.RES ERJ3GEYJ 222 V (2.2 k) | T | 149.7/159.3 |
| R1710 | 7030003480 | S.RES ERJ3GEYJ 222 V (2.2 k) | T | 148.4/159.3 |
| R1711 | 7030003540 | S.RES ERJ3GEYJ 682 V (6.8 k) | T | 147.1/159.3 |
| R1712 | 7030003540 | S.RES ERJ3GEYJ 682 V (6.8 k) | T | 145.8/159.3 |
| R1713 | 7030003660 | S.RES ERJ3GEYJ 683 V (68 k) | T | 145.8/157.2 |
| R1714 | 7030003660 | S.RES ERJ3GEYJ 683 V (68 k) | T | 145.8/155.9 |
| R1715 | 7030003540 | S.RES ERJ3GEYJ 682 V (6.8 k) | T | 143.9/164.8 |
| R1716 | 7030007230 | S.RES ERA3YED 102V (1 k) | T | 164.2/164.8 |
| R1717 | 7030007230 | S.RES ERA3YED 102V (1 k) | T | 164.2/163.5 |
| R1718 | 7030007230 | S.RES ERA3YED 102V (1 k) | T | 164.2/162.2 |
| R1719 | 7030003660 | S.RES ERJ3GEYJ 683 V (68 k) | T | 144.3/166.8 |
| | | | | |
| C1 | 4030011600 | S.CER C1608 JB 1E 104K-T | T | 10.8/18.2 |
| C2 | 4030006880 | S.CER C1608 JB 1H 472K-T | T | 25.7/29.5 |
| C14 | 4030006880 | S.CER C1608 JB 1H 472K-T | T | 37.7/12.5 |
| C15 | 4030006880 | S.CER C1608 JB 1H 472K-T | T | 31.2/15.4 |
| C16 | 4030006880 | S.CER C1608 JB 1H 472K-T | T | 35.1/15.4 |
| C17 | 4030006880 | S.CER C1608 JB 1H 472K-T | T | 13.8/12.6 |
| C18 | 4030006880 | S.CER C1608 JB 1H 472K-T | T | 16.8/12.6 |
| C19 | 4030006880 | S.CER C1608 JB 1H 472K-T | T | 29.5/12.6 |
| C20 | 4030006880 | S.CER C1608 JB 1H 472K-T | T | 87.4/127.8 |
| C21 | 4030006880 | S.CER C1608 JB 1H 472K-T | T | 88.7/127.8 |
| C22 | 4030006880 | S.CER C1608 JB 1H 472K-T | T | 90/127.8 |
| C30 | 4030011600 | S.CER C1608 JB 1E 104K-T | T | 19.1/112.4 |
| C31 | 4030011600 | S.CER C1608 JB 1E 104K-T | T | 20.4/113.7 |
| C32 | 4030011600 | S.CER C1608 JB 1E 104K-T | T | 24.3/111.1 |
| C51 | 4510008520 | S.ELE EEE1CA470SP | T | 84/20.3 |
| C52 | 4030011600 | S.CER C1608 JB 1E 104K-T | T | 78.9/23.7 |
| C53 | 4030011600 | S.CER C1608 JB 1E 104K-T | T | 75.1/23.7 |
| C54 | 4510008500 | S.ELE EEE1CA101WP | T | 70/20.3 |
| C61 | 4510008520 | S.ELE EEE1CA470SP | T | 62.9/20.3 |
| C62 | 4030011600 | S.CER C1608 JB 1E 104K-T | B | 58.2/19.9 |
| C63 | 4030011600 | S.CER C1608 JB 1E 104K-T | B | 54.8/19.9 |
| C64 | 4510008500 | S.ELE EEE1CA101WP | T | 50.1/20.3 |
| C101 | 4030006880 | S.CER C1608 JB 1H 472K-T | T | 39.7/80.7 |
| C102 | 4030011600 | S.CER C1608 JB 1E 104K-T | T | 41.8/79.9 |
| C103 | 4510008540 | S.ELE EEE1CA100SR | T | 40.2/76.8 |
| C104 | 4030011600 | S.CER C1608 JB 1E 104K-T | T | 21.4/100.2 |
| C105 | 4030011600 | S.CER C1608 JB 1E 104K-T | T | 21.4/88.2 |
| C106 | 4030011600 | S.CER C1608 JB 1E 104K-T | T | 21.4/84.4 |
| C107 | 4030011600 | S.CER C1608 JB 1E 104K-T | T | 24.4/79.8 |
| C108 | 4030011600 | S.CER C1608 JB 1E 104K-T | T | 27/79.8 |
| C109 | 4030011600 | S.CER C1608 JB 1E 104K-T | T | 30.8/79.8 |
| C110 | 4030011600 | S.CER C1608 JB 1E 104K-T | T | 36.8/79.8 |
| C111 | 4030011600 | S.CER C1608 JB 1E 104K-T | T | 41.2/88.5 |
| C112 | 4030011600 | S.CER C1608 JB 1E 104K-T | T | 41.3/82.6 |
| C114 | 4030011600 | S.CER C1608 JB 1E 104K-T | T | 39.5/98.4 |
| C115 | 4030011600 | S.CER C1608 JB 1E 104K-T | T | 38.1/98.4 |
| C116 | 4030011600 | S.CER C1608 JB 1E 104K-T | T | 35.3/99.6 |
| C117 | 4030011600 | S.CER C1608 JB 1E 104K-T | T | 23.3/98.8 |
| C118 | 4030011600 | S.CER C1608 JB 1E 104K-T | T | 42.6/82.6 |
| C120 | 4030006880 | S.CER C1608 JB 1H 472K-T | T | 36.7/101.5 |

M.=Mounted side (T: Mounted on the Top side, B: Mounted on the Bottom side)
S.=Surface mount

## [RXPLL-B UNIT]

| REF NO. | ORDER NO. | DESCRIPTION | M. | H/V LOCATION |
|---|---|---|---|---|
| C121 | 4030011600 | S.CER C1608 JB 1E 104K-T | T | 39.5/101.5 |
| C125 | 4030011600 | S.CER C1608 JB 1E 104K-T | T | 14.6/83.1 |
| C129 | 4030011600 | S.CER C1608 JB 1E 104K-T | T | 33.4/79.8 |
| C130 | 4030017810 | S.CER C1608 CH 1H 102J-T | B | 47.6/106.6 |
| C131 | 4030011600 | S.CER C1608 JB 1E 104K-T | T | 30.4/73.2 |
| C132 | 4030011600 | S.CER C1608 JB 1E 104K-T | T | 35.5/73.2 |
| C133 | 4030006880 | S.CER C1608 JB 1H 472K-T | B | 43.5/98.6 |
| C134 | 4030006880 | S.CER C1608 JB 1H 472K-T | B | 43.5/96.8 |
| C135 | 4030006880 | S.CER C1608 JB 1H 472K-T | T | 46/95.5 |
| C136 | 4030006880 | S.CER C1608 JB 1H 472K-T | T | 46/94.2 |
| C137 | 4030006880 | S.CER C1608 JB 1H 472K-T | T | 46/90.3 |
| C138 | 4030006880 | S.CER C1608 JB 1H 472K-T | T | 46.1/87.7 |
| C139 | 4030006880 | S.CER C1608 JB 1H 472K-T | B | 43.5/100.4 |
| C141 | 4030004740 | S.CER C2012 JB 1H 472K-T | B | 34.3/85.1 |
| C142 | 4550007470 | S.TAN F931A107MNMBMA | B | 19.4/87.4 |
| C150 | 4340000050 | S.MLR ECH-U 1C472JB5 | T | 16.3/64.6 |
| C151 | 4550007520 | S.TAN F931A106MAABMA | B | 38.6/92.1 |
| C152 | 4030007070 | S.CER C1608 CH 1H 330J-T | T | 19.2/59.9 |
| C153 | 4030009910 | S.CER C1608 CH 1H 040B-T | T | 21.3/55.4 |
| C154 | 4610001850 | S.TRI TZB4R200AB10R00 | T | 17.6/55.1 |
| C155 | 4030016550 | S.CER CM105 CH 151G 50AT | T | 24.1/55.4 |
| C156 | 4030016550 | S.CER CM105 CH 151G 50AT | T | 26.9/55.4 |
| C157 | 4030016550 | S.CER CM105 CH 151G 50AT | T | 26.9/56.7 |
| C158 | 4030006880 | S.CER C1608 JB 1H 472K-T | T | 23.3/53.1 |
| C159 | 4030006880 | S.CER C1608 JB 1H 472K-T | B | 23/51.9 |
| C161 | 4510008540 | S.ELE EEE1CA100SR | T | 31.3/61 |
| C162 | 4030009920 | S.CER C1608 CH 1H 050B-T | B | 33.6/53 |
| C163 | 4030011600 | S.CER C1608 JB 1E 104K-T | B | 36.9/59.6 |
| C164 | 4030006880 | S.CER C1608 JB 1H 472K-T | B | 30.3/54.8 |
| C165 | 4030006880 | S.CER C1608 JB 1H 472K-T | B | 30.8/74 |
| C166 | 4030011600 | S.CER C1608 JB 1E 104K-T | B | 34.9/78.2 |
| C167 | 4030006880 | S.CER C1608 JB 1H 472K-T | B | 37.4/74 |
| C201 | 4030011340 | S.CER C1608 CH 1H 471J-T | T | 33.8/40.4 |
| C202 | 4510009280 | S.ELE EEE1EA4R7SR | T | 26.5/44 |
| C203 | 4030006900 | S.CER C1608 JB 1H 103K-T | T | 32.5/38.3 |
| C204 | 4030006880 | S.CER C1608 JB 1H 472K-T | T | 25.4/35.3 |
| C205 | 4030006880 | S.CER C1608 JB 1H 472K-T | T | 25.4/34 |
| C206 | 4030006880 | S.CER C1608 JB 1H 472K-T | T | 31.1/43 |
| C207 | 4030007030 | S.CER C1608 CH 1H 150J-T | B | 46.8/32.4 |
| C208 | 4030007030 | S.CER C1608 CH 1H 150J-T | T | 32.5/41 |
| C209 | 4030011340 | S.CER C1608 CH 1H 471J-T | T | 44.1/26.1 |
| C210 | 4550007620 | S.TAN F931V224MAABMA | T | 46.2/26.7 |
| C211 | 4550007300 | S.TAN F931A335MAABMA | B | 46.1/41.6 |
| C219 | 4030006880 | S.CER C1608 JB 1H 472K-T | T | 33.8/37.8 |
| C220 | 4030007130 | S.CER C1608 CH 1H 101J-T | T | 54.7/37.6 |
| C221 | 4030009520 | S.CER C1608 CH 1H 020B-T | T | 54.7/32 |
| C222 | 4610001860 | S.TRI TZB4Z060AB10R00 | T | 68.1/32.6 |
| C223 | 4030007080 | S.CER C1608 CH 1H 390J-T | T | 73.2/36.3 |
| C224 | 4030007010 | S.CER C1608 CH 1H 100D-T | T | 73.2/38.9 |
| C225 | 4030007050 | S.CER C1608 CH 1H 220J-T | T | 73.6/30.9 |
| C226 | 4030006880 | S.CER C1608 JB 1H 472K-T | T | 71/30.9 |
| C227 | 4030009920 | S.CER C1608 CH 1H 050B-T | T | 75.1/32.6 |
| C228 | 4510008540 | S.ELE EEE1CA100SR | T | 68.8/37.8 |
| C229 | 4030009530 | S.CER C1608 CH 1H 030B-T | T | 77.8/32.6 |
| C230 | 4030007100 | S.CER C1608 CH 1H 560J-T | T | 54.7/50 |
| C231 | 4030009510 | S.CER C1608 CH 1H 010B-T | T | 54.7/44.6 |
| C232 | 4610001860 | S.TRI TZB4Z060AB10R00 | T | 68.1/45.1 |
| C233 | 4030007070 | S.CER C1608 CH 1H 330J-T | T | 73.2/48.8 |
| C234 | 4030009920 | S.CER C1608 CH 1H 050B-T | T | 73.2/51.4 |
| C235 | 4030007020 | S.CER C1608 CH 1H 120J-T | T | 73.6/43.3 |
| C236 | 4030006880 | S.CER C1608 JB 1H 472K-T | T | 71/43.3 |
| C237 | 4030009910 | S.CER C1608 CH 1H 040B-T | T | 75.1/45 |
| C238 | 4510008540 | S.ELE EEE1CA100SR | T | 68.8/50.3 |
| C239 | 4030009910 | S.CER C1608 CH 1H 040B-T | T | 77.8/45 |
| C240 | 4030007080 | S.CER C1608 CH 1H 390J-T | T | 54.7/62.5 |
| C241 | 4030009510 | S.CER C1608 CH 1H 010B-T | T | 54.7/57.1 |
| C242 | 4610001860 | S.TRI TZB4Z060AB10R00 | T | 68.1/57.6 |
| C243 | 4030007060 | S.CER C1608 CH 1H 270J-T | T | 73.2/61.3 |
| C244 | 4030009910 | S.CER C1608 CH 1H 040B-T | T | 73.2/63.9 |
| C245 | 4030009920 | S.CER C1608 CH 1H 050B-T | T | 73.6/55.8 |
| C246 | 4030006880 | S.CER C1608 JB 1H 472K-T | T | 71/55.9 |
| C247 | 4030009530 | S.CER C1608 CH 1H 030B-T | T | 75.1/57.5 |
| C248 | 4510008540 | S.ELE EEE1CA100SR | T | 68.8/62.9 |
| C250 | 4030007100 | S.CER C1608 CH 1H 560J-T | T | 54.7/75 |
| C251 | 4030009540 | S.CER C1608 CH 1H 1R5B-T | T | 54.7/69.6 |
| C252 | 4610001810 | S.TRI TZB4Z030AB10R00 | T | 68.1/70.1 |
| C253 | 4030007080 | S.CER C1608 CH 1H 390J-T | T | 73.2/73.8 |
| C254 | 4030009530 | S.CER C1608 CH 1H 030B-T | T | 73.2/76.4 |
| C255 | 4030006990 | S.CER C1608 CH 1H 080D-T | T | 73.6/68.4 |
| C256 | 4030006880 | S.CER C1608 JB 1H 472K-T | T | 71/68.4 |
| C257 | 4030007010 | S.CER C1608 CH 1H 100D-T | T | 75.1/70 |
| C258 | 4510008540 | S.ELE EEE1CA100SR | T | 68.8/75.4 |
| C260 | 4030007110 | S.CER C1608 CH 1H 680J-T | T | 54.7/87.5 |
| C262 | 4610001810 | S.TRI TZB4Z030AB10R00 | T | 68.1/82.6 |
| C263 | 4030007080 | S.CER C1608 CH 1H 390J-T | T | 73.2/86.3 |
| C264 | 4030009530 | S.CER C1608 CH 1H 030B-T | T | 73.2/88.9 |
| C265 | 4030011770 | S.CER C1608 CH 1H 060B-T | T | 73.6/80.9 |
| C266 | 4030006880 | S.CER C1608 JB 1H 472K-T | T | 71/80.9 |
| C267 | 4030007010 | S.CER C1608 CH 1H 100D-T | T | 75.1/82.5 |
| C268 | 4510008540 | S.ELE EEE1CA100SR | T | 68.8/87.9 |
| C272 | 4610001860 | S.TRI TZB4Z060AB10R00 | T | 68.1/95.1 |
| C273 | 4030007050 | S.CER C1608 CH 1H 220J-T | T | 73.2/98.2 |

## [RXPLL-B UNIT]

| REF NO. | ORDER NO. | DESCRIPTION | M. | H/V LOCATION |
|---|---|---|---|---|
| C274 | 4030009530 | S.CER C1608 CH 1H 030B-T | T | 73.2/100.8 |
| C275 | 4030009920 | S.CER C1608 CH 1H 050B-T | T | 73.6/92.8 |
| C276 | 4030006880 | S.CER C1608 JB 1H 472K-T | T | 71/92.8 |
| C277 | 4030007010 | S.CER C1608 CH 1H 100D-T | T | 75.1/95 |
| C278 | 4510008540 | S.ELE EEE1CA100SR | T | 68.8/100.4 |
| C283 | 4030017810 | S.CER C1608 CH 1H 102J-T | T | 82.1/36.3 |
| C284 | 4030006880 | S.CER C1608 JB 1H 472K-T | T | 84.5/34.3 |
| C285 | 4030017810 | S.CER C1608 CH 1H 102J-T | T | 82.1/48.8 |
| C286 | 4030006880 | S.CER C1608 JB 1H 472K-T | T | 84.5/46.9 |
| C287 | 4030017810 | S.CER C1608 CH 1H 102J-T | T | 82.1/61.3 |
| C288 | 4030006880 | S.CER C1608 JB 1H 472K-T | T | 83.9/57.5 |
| C289 | 4030017810 | S.CER C1608 CH 1H 102J-T | T | 82.1/73.8 |
| C290 | 4030006880 | S.CER C1608 JB 1H 472K-T | T | 84.3/70.4 |
| C291 | 4030017810 | S.CER C1608 CH 1H 102J-T | T | 82.1/86.3 |
| C292 | 4030006880 | S.CER C1608 JB 1H 472K-T | T | 84.4/84.4 |
| C293 | 4030017810 | S.CER C1608 CH 1H 102J-T | T | 82.1/98.7 |
| C294 | 4030006880 | S.CER C1608 JB 1H 472K-T | T | 83.2/93.9 |
| C297 | 4030009920 | S.CER C1608 CH 1H 050B-T | T | 52.6/59.4 |
| C299 | 4030007050 | S.CER C1608 CH 1H 220J-T | T | 52.6/84.4 |
| C301 | 4030006880 | S.CER C1608 JB 1H 472K-T | T | 89.3/30.6 |
| C302 | 4030006880 | S.CER C1608 JB 1H 472K-T | T | 94.9/28 |
| C303 | 4030006880 | S.CER C1608 JB 1H 472K-T | B | 92.6/39.8 |
| C304 | 4030006880 | S.CER C1608 JB 1H 472K-T | B | 92.6/45.2 |
| C305 | 4030006880 | S.CER C1608 JB 1H 472K-T | B | 89.1/48.8 |
| C306 | 4030006880 | S.CER C1608 JB 1H 472K-T | B | 89.1/50.6 |
| C309 | 4030017810 | S.CER C1608 CH 1H 102J-T | T | 94.9/42.7 |
| C310 | 4030011600 | S.CER C1608 JB 1E 104K-T | T | 92.8/42.1 |
| C311 | 4510008520 | S.ELE EEE1CA470SP | T | 93.4/47.4 |
| C312 | 4030006880 | S.CER C1608 JB 1H 472K-T | B | 89/27.4 |
| C313 | 4030006880 | S.CER C1608 JB 1H 472K-T | B | 93.7/23.1 |
| C331 | 4030007110 | S.CER C1608 CH 1H 680J-T | T | 89.3/32.2 |
| C332 | 4030007160 | S.CER C1608 CH 1H 181J-T | T | 92.1/33.5 |
| C333 | 4030007110 | S.CER C1608 CH 1H 680J-T | T | 89.3/33.5 |
| C334 | 4030007050 | S.CER C1608 CH 1H 220J-T | T | 94.9/36 |
| C335 | 4030006980 | S.CER C1608 CH 1H 070D-T | T | 94.9/37.4 |
| C336 | 4030007030 | S.CER C1608 CH 1H 150J-T | T | 92.1/38.8 |
| C337 | 4030007050 | S.CER C1608 CH 1H 220J-T | T | 94.9/38.8 |
| C341 | 4030006880 | S.CER C1608 JB 1H 472K-T | T | 94.9/40.1 |
| C342 | 4030006880 | S.CER C1608 JB 1H 472K-T | T | 86.5/33.5 |
| C344 | 4030011600 | S.CER C1608 JB 1E 104K-T | T | 94.9/41.4 |
| C351 | 4030017810 | S.CER C1608 CH 1H 102J-T | T | 94.9/61.6 |
| C352 | 4030011600 | S.CER C1608 JB 1E 104K-T | T | 94.9/62.9 |
| C353 | 4510008520 | S.ELE EEE1CA470SP | T | 93.4/67.1 |
| C354 | 4030006880 | S.CER C1608 JB 1H 472K-T | T | 89.3/51.7 |
| C355 | 4030006880 | S.CER C1608 JB 1H 472K-T | T | 94.9/55.1 |
| C356 | 4030006880 | S.CER C1608 JB 1H 472K-T | T | 89.2/58.4 |
| C357 | 4030006880 | S.CER C1608 JB 1H 472K-T | T | 94.9/57.7 |
| C358 | 4030006880 | S.CER C1608 JB 1H 472K-T | B | 89.2/60.3 |
| C359 | 4030006880 | S.CER C1608 JB 1H 472K-T | B | 92.6/62.1 |
| C360 | 4030006880 | S.CER C1608 JB 1H 472K-T | B | 89.9/66.9 |
| C361 | 4030006880 | S.CER C1608 JB 1H 472K-T | T | 89.3/83.4 |
| C363 | 4030006880 | S.CER C1608 JB 1H 472K-T | T | 86.1/60.9 |
| C364 | 4030017810 | S.CER C1608 CH 1H 102J-T | T | 86.7/52.3 |
| C365 | 4030006880 | S.CER C1608 JB 1H 472K-T | T | 90.3/59.9 |
| C421 | 4030006880 | S.CER C1608 JB 1H 472K-T | T | 94.1/88.5 |
| C423 | 4030006880 | S.CER C1608 JB 1H 472K-T | T | 94.1/93.3 |
| C426 | 4030006880 | S.CER C1608 JB 1H 472K-T | B | 94.6/87.3 |
| C427 | 4030006880 | S.CER C1608 JB 1H 472K-T | T | 92.1/86.5 |
| C441 | 4030007040 | S.CER C1608 CH 1H 180J-T | T | 94.9/71.3 |
| C442 | 4030007040 | S.CER C1608 CH 1H 180J-T | T | 94.9/72.6 |
| C443 | 4030007020 | S.CER C1608 CH 1H 120J-T | T | 92.1/74.2 |
| C444 | 4030007080 | S.CER C1608 CH 1H 390J-T | T | 94.9/73.9 |
| C445 | 4030011770 | S.CER C1608 CH 1H 060B-T | T | 94.9/75.2 |
| C446 | 4030007060 | S.CER C1608 CH 1H 270J-T | T | 94.9/79.1 |
| C447 | 4030007110 | S.CER C1608 CH 1H 680J-T | T | 92.8/78.9 |
| C448 | 4030006880 | S.CER C1608 JB 1H 472K-T | T | 94.9/76.5 |
| C449 | 4030006880 | S.CER C1608 JB 1H 472K-T | T | 88.1/69.1 |
| C451 | 4030007110 | S.CER C1608 CH 1H 680J-T | T | 92/82.1 |
| C452 | 4030007160 | S.CER C1608 CH 1H 181J-T | T | 92/80.8 |
| C453 | 4030011600 | S.CER C1608 JB 1E 104K-T | T | 94.9/77.8 |
| C501 | 4030006880 | S.CER C1608 JB 1H 472K-T | T | 38.9/131.2 |
| C502 | 4030011600 | S.CER C1608 JB 1E 104K-T | T | 38.9/129.9 |
| C503 | 4510008540 | S.ELE EEE1CA100SR | T | 36.6/126.7 |
| C504 | 4030011600 | S.CER C1608 JB 1E 104K-T | T | 21.4/153.1 |
| C505 | 4550007470 | S.TAN F931A107MNMBMA | B | 19.2/140.3 |
| C506 | 4030011600 | S.CER C1608 JB 1E 104K-T | T | 21.4/141 |
| C507 | 4030011600 | S.CER C1608 JB 1E 104K-T | T | 21.4/137.1 |
| C509 | 4030011600 | S.CER C1608 JB 1E 104K-T | T | 25.8/132.6 |
| C510 | 4030011600 | S.CER C1608 JB 1E 104K-T | T | 28.4/132.6 |
| C511 | 4030011600 | S.CER C1608 JB 1E 104K-T | T | 32.2/132.6 |
| C512 | 4030011600 | S.CER C1608 JB 1E 104K-T | T | 34.8/132.6 |
| C513 | 4030011600 | S.CER C1608 JB 1E 104K-T | T | 37.4/132.6 |
| C514 | 4030011600 | S.CER C1608 JB 1E 104K-T | T | 41.2/136 |
| C515 | 4030011600 | S.CER C1608 JB 1E 104K-T | T | 41.3/139.7 |
| C516 | 4030011600 | S.CER C1608 JB 1E 104K-T | T | 41.3/142.3 |
| C517 | 4030011600 | S.CER C1608 JB 1E 104K-T | T | 37.6/151.8 |
| C518 | 4030011600 | S.CER C1608 JB 1E 104K-T | T | 34.8/151.8 |
| C519 | 4030011600 | S.CER C1608 JB 1E 104K-T | T | 31.2/151.8 |
| C520 | 4030011600 | S.CER C1608 JB 1E 104K-T | T | 23.3/151.9 |
| C521 | 4030011600 | S.CER C1608 JB 1E 104K-T | T | 41.6/134 |
| C522 | 4550007220 | S.TAN F931A476MCMBMA | B | 40.7/145 |
| C525 | 4030006880 | S.CER C1608 JB 1H 472K-T | T | 35.3/154.5 |

M.=Mounted side (T: Mounted on the Top side, B: Mounted on the Bottom side)
S.=Surface mount

## [RXPLL-B UNIT]

| REF NO. | ORDER NO. | DESCRIPTION | M. | H/V LOCATION |
|---|---|---|---|---|
| C526 | 4030011600 | S.CER C1608 JB 1E 104K-T | T | 36.6/154.5 |
| C531 | 4030006880 | S.CER C1608 JB 1H 472K-T | T | 14.6/137.5 |
| C532 | 4030007070 | S.CER C1608 CH 1H 330J-T | T | 17.2/137.5 |
| C533 | 4030007110 | S.CER C1608 CH 1H 680J-T | T | 17.3/133.4 |
| C534 | 4030007110 | S.CER C1608 CH 1H 680J-T | T | 16.8/130.1 |
| C535 | 4030007070 | S.CER C1608 CH 1H 330J-T | T | 18.1/127 |
| C536 | 4030006880 | S.CER C1608 JB 1H 472K-T | T | 20.9/127.6 |
| C537 | 4030006880 | S.CER C1608 JB 1H 472K-T | T | 27.2/126.4 |
| C540 | 4030006880 | S.CER C1608 JB 1H 472K-T | B | 56.3/142.8 |
| C541 | 4510008540 | S.ELE EEE1CA100SR | T | 51/139.3 |
| C542 | 4340000260 | S.MLR ECPU1C104MA5 | B | 47.8/128.7 |
| C543 | 4030007060 | S.CER C1608 CH 1H 270J-T | T | 62.2/136.4 |
| C545 | 4030008560 | S.CER C1608 CH 1H 300J-T | T | 70/137.1 |
| C546 | 4610001830 | S.TRI TZB4S100AB10R00 | T | 65.8/138.7 |
| C547 | 4030007130 | S.CER C1608 CH 1H 101J-T | T | 71.3/137.1 |
| C548 | 4030007010 | S.CER C1608 CH 1H 100D-T | T | 71.3/139.9 |
| C549 | 4030007050 | S.CER C1608 CH 1H 220J-T | T | 68.9/145.1 |
| C550 | 4030006880 | S.CER C1608 JB 1H 472K-T | T | 66.3/143 |
| C551 | 4030009520 | S.CER C1608 CH 1H 020B-T | T | 71.3/142.8 |
| C552 | 4030017810 | S.CER C1608 CH 1H 102J-T | B | 54.6/139.5 |
| C553 | 4030006880 | S.CER C1608 JB 1H 472K-T | B | 56.3/139.5 |
| C554 | 4510008500 | S.ELE EEE1CA101WP | T | 50.9/146.6 |
| C555 | 4030006880 | S.CER C1608 JB 1H 472K-T | B | 47.7/149.5 |
| C556 | 4550007220 | S.TAN F931A476MCMBMA | B | 76.4/136.1 |
| C558 | 4550007520 | S.TAN F931A106MAABMA | B | 43.4/132.5 |
| C559 | 4550007400 | S.TAN F931A225MAABMA | B | 43.4/129.9 |
| C561 | 4550007520 | S.TAN F931A106MAABMA | T | 70/157.5 |
| C562 | 4030006880 | S.CER C1608 JB 1H 472K-T | T | 68.3/155.5 |
| C563 | 4030017810 | S.CER C1608 CH 1H 102J-T | B | 60.1/158 |
| C564 | 4030006880 | S.CER C1608 JB 1H 472K-T | B | 58.8/158 |
| C565 | 4510008520 | S.ELE EEE1CA470SP | T | 50.9/155.6 |
| C566 | 4030006880 | S.CER C1608 JB 1H 472K-T | T | 64.4/155.5 |
| C571 | 4030006880 | S.CER C1608 JB 1H 472K-T | B | 58.5/161.3 |
| C573 | 4030007040 | S.CER C1608 CH 1H 180J-T | B | 72.5/166.8 |
| C574 | 4030009510 | S.CER C1608 CH 1H 010B-T | T | 72.6/169.1 |
| C575 | 4030007040 | S.CER C1608 CH 1H 180J-T | T | 72.6/171.9 |
| C580 | 4030006880 | S.CER C1608 JB 1H 472K-T | T | 41.9/152.4 |
| C581 | 4030006880 | S.CER C1608 JB 1H 472K-T | T | 41.9/144.2 |
| C591 | 4030006880 | S.CER C1608 JB 1H 472K-T | T | 63.5/171.2 |
| C592 | 4030007060 | S.CER C1608 CH 1H 270J-T | T | 62.8/163.1 |
| C593 | 4510008540 | S.ELE EEE1CA100SR | T | 54.4/170.7 |
| C594 | 4030006880 | S.CER C1608 JB 1H 472K-T | T | 57.4/171.9 |
| C596 | 4030006880 | S.CER C1608 JB 1H 472K-T | B | 63.7/168.1 |
| C597 | 4030007050 | S.CER C1608 CH 1H 220J-T | T | 62.2/171.2 |
| C601 | 4030006880 | S.CER C1608 JB 1H 472K-T | T | 47.3/116.4 |
| C602 | 4030006880 | S.CER C1608 JB 1H 472K-T | T | 49.5/121.4 |
| C607 | 4030006880 | S.CER C1608 JB 1H 472K-T | T | 51.2/115.4 |
| C608 | 4030006880 | S.CER C1608 JB 1H 472K-T | T | 53.2/115.9 |
| C609 | 4030007100 | S.CER C1608 CH 1H 560J-T | T | 53.2/114.6 |
| C610 | 4030008750 | S.CER C1608 CH 1H 360J-T | T | 55.2/115.4 |
| C611 | 4030007140 | S.CER C1608 CH 1H 121J-T | T | 56.3/113.5 |
| C612 | 4030007020 | S.CER C1608 CH 1H 120J-T | T | 57.1/114.8 |
| C613 | 4030007110 | S.CER C1608 CH 1H 680J-T | T | 56.3/112.2 |
| C651 | 4030006880 | S.CER C1608 JB 1H 472K-T | T | 13.5/174 |
| C652 | 4030011600 | S.CER C1608 JB 1E 104K-T | T | 12.9/176.3 |
| C653 | 4510008540 | S.ELE EEE1CA100SR | T | 6.8/172.6 |
| C654 | 4030011600 | S.CER C1608 JB 1E 104K-T | T | 22.8/161.4 |
| C655 | 4030011600 | S.CER C1608 JB 1E 104K-T | T | 25.9/161.4 |
| C656 | 4030011600 | S.CER C1608 JB 1E 104K-T | T | 25.8/177.1 |
| C657 | 4030011600 | S.CER C1608 JB 1E 104K-T | T | 22.7/177.1 |
| C658 | 4030011600 | S.CER C1608 JB 1E 104K-T | T | 13.5/172.7 |
| C659 | 4030011600 | S.CER C1608 JB 1E 104K-T | T | 16.5/163.4 |
| C660 | 4030006880 | S.CER C1608 JB 1H 472K-T | T | 17.6/161.4 |
| C661 | 4030011600 | S.CER C1608 JB 1E 104K-T | T | 13.5/166.9 |
| C662 | 4550007220 | S.TAN F931A476MCMBMA | B | 30.5/169.4 |
| C680 | 4030006880 | S.CER C1608 JB 1H 472K-T | T | 34.3/177.1 |
| C681 | 4030007160 | S.CER C1608 CH 1H 181J-T | T | 40.3/177.1 |
| C682 | 4030007140 | S.CER C1608 CH 1H 121J-T | T | 39.6/175.2 |
| C683 | 4030011330 | S.CER C1608 CH 1H 391J-T | T | 40.9/175.2 |
| C684 | 4030007080 | S.CER C1608 CH 1H 390J-T | B | 39.3/174 |
| C685 | 4030011280 | S.CER C1608 CH 1H 271J-T | B | 42.3/172.6 |
| C686 | 4030010760 | S.CER C1608 CH 1H 331J-T | B | 39.3/170.6 |
| C687 | 4030018580 | S.CER C1608 CH 1H 821J-T | T | 41/169.7 |
| C688 | 4030010760 | S.CER C1608 CH 1H 331J-T | B | 37.5/169.7 |
| C689 | 4030011600 | S.CER C1608 JB 1E 104K-T | T | 37.4/166.4 |
| C690 | 4030011600 | S.CER C1608 JB 1E 104K-T | T | 37.4/161.3 |
| C691 | 4030011600 | S.CER C1608 JB 1E 104K-T | T | 46.4/164 |
| C692 | 4030006880 | S.CER C1608 JB 1H 472K-T | T | 40.3/162.1 |
| C693 | 4030006880 | S.CER C1608 JB 1H 472K-T | B | 58.4/169.6 |
| C694 | 4030006880 | S.CER C1608 JB 1H 472K-T | B | 58.4/164.2 |
| C703 | 4030017810 | S.CER C1608 CH 1H 102J-T | T | 24.3/116.6 |
| C704 | 4030006880 | S.CER C1608 JB 1H 472K-T | T | 23/116.6 |
| C705 | 4510008500 | S.ELE EEE1CA101WP | T | 29.4/118.7 |
| C707 | 4030011600 | S.CER C1608 JB 1E 104K-T | T | 32.1/113.7 |
| C708 | 4030011600 | S.CER C1608 JB 1E 104K-T | T | 32.1/108.1 |
| C709 | 4030007070 | S.CER C1608 CH 1H 330J-T | T | 38.8/112.9 |
| C710 | 4030006880 | S.CER C1608 JB 1H 472K-T | T | 36.2/112.9 |
| C711 | 4030009540 | S.CER C1608 CH 1H 1R5B-T | B | 39.3/113.6 |
| C712 | 4030007070 | S.CER C1608 CH 1H 330J-T | T | 36.2/114.2 |
| C713 | 4030006880 | S.CER C1608 JB 1H 472K-T | T | 42/118.8 |
| C1000 | 4030007050 | S.CER C1608 CH 1H 220J-T | B | 177.1/13.8 |
| C1002 | 4030006880 | S.CER C1608 JB 1H 472K-T | B | 153.1/16.2 |

## [RXPLL-B UNIT]

| REF NO. | ORDER NO. | DESCRIPTION | M. | H/V LOCATION |
|---|---|---|---|---|
| C1003 | 4030012600 | S.CER C2012 JB 1A 105M-T | T | 157.4/8.2 |
| C1004 | 4030011600 | S.CER C1608 JB 1E 104K-T | B | 169.6/8.7 |
| C1005 | 4030011600 | S.CER C1608 JB 1E 104K-T | T | 162.8/17.2 |
| C1006 | 4030010210 | S.CER C3216 JB 1C 105M-T | T | 173.8/18.6 |
| C1007 | 4030006880 | S.CER C1608 JB 1H 472K-T | T | 172.4/23.9 |
| C1008 | 4030006880 | S.CER C1608 JB 1H 472K-T | T | 160/24 |
| C1009 | 4030006880 | S.CER C1608 JB 1H 472K-T | T | 147.6/23.8 |
| C1010 | 4030012600 | S.CER C2012 JB 1A 105M-T | T | 154.5/28.9 |
| C1011 | 4030012600 | S.CER C2012 JB 1A 105M-T | T | 144.2/29.3 |
| C1012 | 4030010210 | S.CER C3216 JB 1C 105M-T | T | 144.8/40.2 |
| C1013 | 4030012600 | S.CER C2012 JB 1A 105M-T | T | 144.2/33.2 |
| C1014 | 4030018810 | S.CER C3216 CH 1H 333J-T | B | 151.6/48.3 |
| C1015 | 4030012600 | S.CER C2012 JB 1A 105M-T | T | 163.6/13.8 |
| C1016 | 4030012600 | S.CER C2012 JB 1A 105M-T | T | 173.6/33.2 |
| C1017 | 4030012600 | S.CER C2012 JB 1A 105M-T | T | 163.3/33.2 |
| C1020 | 4030012600 | S.CER C2012 JB 1A 105M-T | B | 170/38.6 |
| C1021 | 4030012600 | S.CER C2012 JB 1A 105M-T | B | 154/38.6 |
| C1024 | 4030010210 | S.CER C3216 JB 1C 105M-T | B | 170.5/45.5 |
| C1025 | 4030010210 | S.CER C3216 JB 1C 105M-T | B | 154.7/45.5 |
| C1026 | 4030010210 | S.CER C3216 JB 1C 105M-T | T | 171.4/52.7 |
| C1027 | 4030010210 | S.CER C3216 JB 1C 105M-T | T | 165.6/52.7 |
| C1028 | 4030006880 | S.CER C1608 JB 1H 472K-T | B | 156.4/65.4 |
| C1029 | 4030006880 | S.CER C1608 JB 1H 472K-T | T | 168.5/65.4 |
| C1030 | 4030010210 | S.CER C3216 JB 1C 105M-T | T | 164.5/18 |
| C1031 | 4030012600 | S.CER C2012 JB 1A 105M-T | B | 169.2/10.8 |
| C1033 | 4550006470 | S.TAN TEESVB2 1D 106M8R | B | 146.5/47.7 |
| C1034 | 4550006470 | S.TAN TEESVB2 1D 106M8R | B | 174/52.1 |
| C1035 | 4550006470 | S.TAN TEESVB2 1D 106M8R | B | 164.6/15.8 |
| C1036 | 4030007120 | S.CER C1608 CH 1H 820J-T | T | 160.2/12.7 |
| C1037 | 4030007090 | S.CER C1608 CH 1H 470J-T | B | 149.3/49.3 |
| C1038 | 4030017810 | S.CER C1608 CH 1H 102J-T | T | 146.6/26.2 |
| C1039 | 4030017810 | S.CER C1608 CH 1H 102J-T | T | 146.5/41 |
| C1040 | 4030017810 | S.CER C1608 CH 1H 102J-T | T | 145.3/36.4 |
| C1041 | 4030006990 | S.CER C1608 CH 1H 080D-T | B | 153.4/31 |
| C1046 | 4030007010 | S.CER C1608 CH 1H 100D-T | B | 168.4/53.7 |
| C1048 | 4030017810 | S.CER C1608 CH 1H 102J-T | B | 170.6/41.6 |
| C1049 | 4030017810 | S.CER C1608 CH 1H 102J-T | B | 154.6/41.6 |
| C1050 | 4030017810 | S.CER C1608 CH 1H 102J-T | B | 170.5/49.5 |
| C1051 | 4030017810 | S.CER C1608 CH 1H 102J-T | B | 154.7/49.4 |
| C1052 | 4030007100 | S.CER C1608 CH 1H 560J-T | B | 164.1/29.6 |
| C1053 | 4030007110 | S.CER C1608 CH 1H 680J-T | T | 175.2/77.3 |
| C1054 | 4030007010 | S.CER C1608 CH 1H 100D-T | B | 175.7/72.4 |
| C1055 | 4030007140 | S.CER C1608 CH 1H 121J-T | B | 175.7/74.2 |
| C1056 | 4030007050 | S.CER C1608 CH 1H 220J-T | T | 175.2/76 |
| C1057 | 4030007130 | S.CER C1608 CH 1H 101J-T | T | 172.1/77.1 |
| C1058 | 4030009530 | S.CER C1608 CH 1H 030B-T | B | 173.2/12.7 |
| C1060 | 4030017810 | S.CER C1608 CH 1H 102J-T | T | 178.6/94.4 |
| C1061 | 4030007090 | S.CER C1608 CH 1H 470J-T | B | 147.7/91.8 |
| C1062 | 4030007170 | S.CER C1608 CH 1H 221J-T | B | 149.5/91.8 |
| C1064 | 4030007090 | S.CER C1608 CH 1H 470J-T | T | 148.7/80.1 |
| C1066 | 4030007010 | S.CER C1608 CH 1H 100D-T | T | 138.6/81.9 |
| C1067 | 4030007010 | S.CER C1608 CH 1H 100D-T | T | 173.4/77.1 |
| C1068 | 4030009510 | S.CER C1608 CH 1H 010B-T | B | 175.4/46.1 |
| C1069 | 4030009510 | S.CER C1608 CH 1H 010B-T | B | 159.4/46.1 |
| C1070 | 4030006980 | S.CER C1608 CH 1H 070D-T | T | 137.2/81.9 |
| C1071 | 4030007100 | S.CER C1608 CH 1H 560J-T | B | 162.2/75.3 |
| C1072 | 4030007170 | S.CER C1608 CH 1H 221J-T | B | 162/78.7 |
| C1073 | 4030007080 | S.CER C1608 CH 1H 390J-T | B | 164.1/76.4 |
| C1074 | 4030007060 | S.CER C1608 CH 1H 270J-T | T | 148.7/78.6 |
| C1081 | 4030006900 | S.CER C1608 JB 1H 103K-T | B | 156.1/86 |
| C1082 | 4030006900 | S.CER C1608 JB 1H 103K-T | B | 151.3/91.8 |
| C1083 | 4030006900 | S.CER C1608 JB 1H 103K-T | B | 151.2/81.6 |
| C1084 | 4030006880 | S.CER C1608 JB 1H 472K-T | B | 149.4/81.6 |
| C1085 | 4030006880 | S.CER C1608 JB 1H 472K-T | B | 153/81.6 |
| C1091 | 4030006880 | S.CER C1608 JB 1H 472K-T | T | 149.3/149.4 |
| C1092 | 4030006880 | S.CER C1608 JB 1H 472K-T | T | 147/138.5 |
| C1093 | 4030006880 | S.CER C1608 JB 1H 472K-T | T | 161.3/135.8 |
| C1101 | 4030006900 | S.CER C1608 JB 1H 103K-T | T | 177/90.9 |
| C1102 | 4030006900 | S.CER C1608 JB 1H 103K-T | T | 175.4/115.5 |
| C1103 | 4030011600 | S.CER C1608 JB 1E 104K-T | T | 179.6/116.4 |
| C1104 | 4030011600 | S.CER C1608 JB 1E 104K-T | T | 175.4/87.7 |
| C1106 | 4030011600 | S.CER C1608 JB 1E 104K-T | T | 179.3/128.8 |
| C1107 | 4030011600 | S.CER C1608 JB 1E 104K-T | B | 172.3/124.2 |
| C1109 | 4030007090 | S.CER C1608 CH 1H 470J-T | T | 175.7/137.9 |
| C1110 | 4030006900 | S.CER C1608 JB 1H 103K-T | T | 175.7/136.6 |
| C1111 | 4030011600 | S.CER C1608 JB 1E 104K-T | T | 176.7/132 |
| C1112 | 4030006900 | S.CER C1608 JB 1H 103K-T | T | 179.3/132 |
| C1113 | 4030007090 | S.CER C1608 CH 1H 470J-T | T | 178.6/140.9 |
| C1114 | 4030006900 | S.CER C1608 JB 1H 103K-T | B | 178.4/138 |
| C1115 | 4030011600 | S.CER C1608 JB 1E 104K-T | T | 175.7/140 |
| C1116 | 4030006900 | S.CER C1608 JB 1H 103K-T | T | 165.7/138.7 |
| C1117 | 4030007010 | S.CER C1608 CH 1H 100D-T | T | 169.7/142.2 |
| C1118 | 4030011600 | S.CER C1608 JB 1E 104K-T | T | 171/142.2 |
| C1119 | 4030006880 | S.CER C1608 JB 1H 472K-T | T | 171.9/146.6 |
| C1120 | 4030006880 | S.CER C1608 JB 1H 472K-T | T | 171.9/148.4 |
| C1121 | 4030011600 | S.CER C1608 JB 1E 104K-T | T | 180.6/147.7 |
| C1122 | 4030009530 | S.CER C1608 CH 1H 030B-T | T | 178.2/120.3 |
| C1123 | 4030006900 | S.CER C1608 JB 1H 103K-T | T | 182.1/100.9 |
| C1124 | 4030006900 | S.CER C1608 JB 1H 103K-T | T | 175.3/105.9 |
| C1125 | 4030006900 | S.CER C1608 JB 1H 103K-T | T | 175.5/85.1 |
| C1126 | 4030011600 | S.CER C1608 JB 1E 104K-T | T | 173.4/131.1 |
| C1151 | 4030007110 | S.CER C1608 CH 1H 680J-T | B | 123.1/64 |

M.=Mounted side (T: Mounted on the Top side, B: Mounted on the Bottom side)
S.=Surface mount

## [RXPLL-B UNIT]

| REF NO. | ORDER NO. | DESCRIPTION | M. | H/V LOCATION |
|---|---|---|---|---|
| C1152 | 4030007110 | S.CER C1608 CH 1H 680J-T | B | 123.1/57 |
| C1153 | 4030017810 | S.CER C1608 CH 1H 102J-T | T | 131.5/63.9 |
| C1201 | 4030007110 | S.CER C1608 CH 1H 680J-T | B | 120.2/21.8 |
| C1202 | 4030007110 | S.CER C1608 CH 1H 680J-T | B | 118.4/21.8 |
| C1207 | 4030006880 | S.CER C1608 JB 1H 472K-T | B | 123/11.8 |
| C1226 | 4030009500 | S.CER C1608 CH 1H 0R5B-T | B | 124.9/35.6 |
| C1227 | 4030009500 | S.CER C1608 CH 1H 0R5B-T | B | 115.4/35.6 |
| C1228 | 4030009920 | S.CER C1608 CH 1H 050B-T | B | 113.9/41.8 |
| C1231 | 4030006900 | S.CER C1608 JB 1H 103K-T | T | 118.9/21.5 |
| C1232 | 4030006900 | S.CER C1608 JB 1H 103K-T | T | 109/21.5 |
| C1234 | 4030006900 | S.CER C1608 JB 1H 103K-T | B | 123.5/38.3 |
| C1235 | 4030006880 | S.CER C1608 JB 1H 472K-T | B | 116.6/32.1 |
| C1236 | 4030006900 | S.CER C1608 JB 1H 103K-T | T | 119.8/40 |
| C1238 | 4030006900 | S.CER C1608 JB 1H 103K-T | B | 114/38.3 |
| C1239 | 4030006880 | S.CER C1608 JB 1H 472K-T | B | 106.8/32.3 |
| C1240 | 4030006900 | S.CER C1608 JB 1H 103K-T | T | 111.7/40.5 |
| C1241 | 4030006900 | S.CER C1608 JB 1H 103K-T | T | 113.6/38.6 |
| C1243 | 4030006880 | S.CER C1608 JB 1H 472K-T | B | 129.6/46.7 |
| C1244 | 4030007080 | S.CER C1608 CH 1H 390J-T | T | 149.6/67 |
| C1245 | 4030007130 | S.CER C1608 CH 1H 101J-T | T | 151/64.4 |
| C1246 | 4030007120 | S.CER C1608 CH 1H 820J-T | T | 150.9/67 |
| C1247 | 4030007090 | S.CER C1608 CH 1H 470J-T | T | 153.4/63.5 |
| C1248 | 4030007130 | S.CER C1608 CH 1H 101J-T | T | 153.4/66.8 |
| C1249 | 4030007020 | S.CER C1608 CH 1H 120J-T | T | 153.1/70.3 |
| C1250 | 4030007100 | S.CER C1608 CH 1H 560J-T | B | 152.4/74.3 |
| C1251 | 4030006900 | S.CER C1608 JB 1H 103K-T | T | 160.2/92.9 |
| C1252 | 4030006900 | S.CER C1608 JB 1H 103K-T | T | 152.7/92.9 |
| C1253 | 4030006900 | S.CER C1608 JB 1H 103K-T | B | 152.5/111.2 |
| C1255 | 4030017810 | S.CER C1608 CH 1H 102J-T | B | 155.7/99.3 |
| C1256 | 4030007010 | S.CER C1608 CH 1H 100D-T | T | 156.3/98.8 |
| C1257 | 4030011600 | S.CER C1608 JB 1E 104K-T | B | 155.7/103 |
| C1258 | 4030007080 | S.CER C1608 CH 1H 390J-T | B | 152/97.5 |
| C1264 | 4030007110 | S.CER C1608 CH 1H 680J-T | T | 122/51.1 |
| C1265 | 4610001830 | S.TRI TZB4S100AB10R00 | T | 163.8/70.8 |
| C1266 | 4030007020 | S.CER C1608 CH 1H 120J-T | T | 160.1/74.5 |
| C1267 | 4030006880 | S.CER C1608 JB 1H 472K-T | B | 157/126.4 |
| C1268 | 4030006980 | S.CER C1608 CH 1H 070D-T | T | 149.6/64.4 |
| C1302 | 4030007060 | S.CER C1608 CH 1H 270J-T | T | 159.3/111 |
| C1303 | 4030006980 | S.CER C1608 CH 1H 070D-T | T | 159.3/112.9 |
| C1304 | 4030007070 | S.CER C1608 CH 1H 330J-T | T | 159.3/114.2 |
| C1305 | 4030007010 | S.CER C1608 CH 1H 100D-T | T | 153.5/114.6 |
| C1306 | 4030009650 | S.CER C1608 CH 1H 240J-T | T | 159.3/115.5 |
| C1307 | 4030007030 | S.CER C1608 CH 1H 150J-T | T | 153.5/120.2 |
| C1308 | 4030006900 | S.CER C1608 JB 1H 103K-T | T | 155.1/127.1 |
| C1309 | 4030007080 | S.CER C1608 CH 1H 390J-T | T | 156.5/125.8 |
| C1310 | 4030007080 | S.CER C1608 CH 1H 390J-T | T | 159.1/128.4 |
| C1311 | 4030006900 | S.CER C1608 JB 1H 103K-T | B | 149/118.9 |
| C1312 | 4030007060 | S.CER C1608 CH 1H 270J-T | T | 155.5/111.7 |
| C1313 | 4030007060 | S.CER C1608 CH 1H 270J-T | T | 159.1/127.1 |
| C1355 | 4030006880 | S.CER C1608 JB 1H 472K-T | T | 144.7/70 |
| C1357 | 4030007000 | S.CER C1608 CH 1H 090D-T | B | 144.6/67.1 |
| C1358 | 4030011600 | S.CER C1608 JB 1E 104K-T | B | 139.1/70.4 |
| C1360 | 4030011600 | S.CER C1608 JB 1E 104K-T | B | 146.4/70.4 |
| C1361 | 4030007020 | S.CER C1608 CH 1H 120J-T | B | 137.7/69.5 |
| C1362 | 4030011600 | S.CER C1608 JB 1E 104K-T | T | 137.5/65.6 |
| C1403 | 4030017810 | S.CER C1608 CH 1H 102J-T | T | 114.7/70.3 |
| C1404 | 4030017810 | S.CER C1608 CH 1H 102J-T | T | 116.3/104.8 |
| C1405 | 4030006900 | S.CER C1608 JB 1H 103K-T | B | 115.9/63.9 |
| C1406 | 4030017810 | S.CER C1608 CH 1H 102J-T | T | 114.2/66.2 |
| C1407 | 4030017810 | S.CER C1608 CH 1H 102J-T | T | 119.9/70.3 |
| C1408 | 4030006900 | S.CER C1608 JB 1H 103K-T | T | 116.3/73 |
| C1409 | 4030006900 | S.CER C1608 JB 1H 103K-T | T | 114.4/68.1 |
| C1410 | 4030007030 | S.CER C1608 CH 1H 150J-T | T | 116.3/83.3 |
| C1411 | 4030006990 | S.CER C1608 CH 1H 080D-T | T | 112.2/87.8 |
| C1412 | 4030007030 | S.CER C1608 CH 1H 150J-T | T | 116.3/93.7 |
| C1413 | 4030007020 | S.CER C1608 CH 1H 120J-T | T | 107/83.3 |
| C1414 | 4030006990 | S.CER C1608 CH 1H 080D-T | T | 103.6/86.6 |
| C1415 | 4030007020 | S.CER C1608 CH 1H 120J-T | T | 107/93.7 |
| C1416 | 4030006900 | S.CER C1608 JB 1H 103K-T | T | 113.2/103.4 |
| C1417 | 4030006900 | S.CER C1608 JB 1H 103K-T | T | 110.5/107.6 |
| C1418 | 4030017810 | S.CER C1608 CH 1H 102J-T | T | 110.4/105.8 |
| C1419 | 4030017810 | S.CER C1608 CH 1H 102J-T | T | 111/108.9 |
| C1420 | 4030007120 | S.CER C1608 CH 1H 820J-T | B | 113.2/114.2 |
| C1421 | 4030007150 | S.CER C1608 CH 1H 151J-T | B | 115/114.2 |
| C1423 | 4030010750 | S.CER C1608 CH 1H 201J-T | B | 120.3/111.1 |
| C1424 | 4030007010 | S.CER C1608 CH 1H 100D-T | T | 132.8/103.3 |
| C1425 | 4030011600 | S.CER C1608 JB 1E 104K-T | T | 136.5/106.2 |
| C1426 | 4030011600 | S.CER C1608 JB 1E 104K-T | T | 137.8/106.2 |
| C1427 | 4030006900 | S.CER C1608 JB 1H 103K-T | T | 133.9/106.2 |
| C1428 | 4030006980 | S.CER C1608 CH 1H 070D-T | T | 119.5/109 |
| C1429 | 4030006900 | S.CER C1608 JB 1H 103K-T | T | 120.5/113.6 |
| C1430 | 4030007040 | S.CER C1608 CH 1H 180J-T | B | 131.9/115.3 |
| C1431 | 4030017810 | S.CER C1608 CH 1H 102J-T | T | 127/116.2 |
| C1432 | 4030009980 | S.CER C1608 JB 1H 152K-T | T | 129.1/114.1 |
| C1433 | 4030011600 | S.CER C1608 JB 1E 104K-T | T | 130.4/114.1 |
| C1434 | 4030009920 | S.CER C1608 CH 1H 050B-T | B | 124.7/134.4 |
| C1435 | 4030009920 | S.CER C1608 CH 1H 050B-T | B | 124.7/131.6 |
| C1436 | 4030011600 | S.CER C1608 JB 1E 104K-T | B | 137.2/122.2 |
| C1437 | 4030009920 | S.CER C1608 CH 1H 050B-T | T | 104/83.3 |
| C1438 | 4030009920 | S.CER C1608 CH 1H 050B-T | T | 102.3/86.6 |
| C1439 | 4030009920 | S.CER C1608 CH 1H 050B-T | T | 110/93.7 |
| C1441 | 4030006880 | S.CER C1608 JB 1H 472K-T | T | 120.5/116.2 |

## [RXPLL-B UNIT]

| REF NO. | ORDER NO. | DESCRIPTION | M. | H/V LOCATION |
|---|---|---|---|---|
| C1451 | 4030007020 | S.CER C1608 CH 1H 120J-T | T | 125.5/80.1 |
| C1453 | 4030007030 | S.CER C1608 CH 1H 150J-T | T | 122.1/85.1 |
| C1454 | 4030007030 | S.CER C1608 CH 1H 150J-T | T | 120.8/85.1 |
| C1456 | 4030007020 | S.CER C1608 CH 1H 120J-T | T | 125.5/90.9 |
| C1457 | 4030006900 | S.CER C1608 JB 1H 103K-T | T | 118.3/72.9 |
| C1458 | 4030006900 | S.CER C1608 JB 1H 103K-T | T | 116.6/103.5 |
| C1501 | 4030018530 | S.CER C3216 CH 1H 103J-T | T | 131.2/124.5 |
| C1502 | 4550003220 | S.TAN TEESVA 1E 105M8R | T | 132.1/139.2 |
| C1503 | 4030006900 | S.CER C1608 JB 1H 103K-T | T | 137/142.1 |
| C1504 | 4030012610 | S.CER C2012 JB 1C 474K-T | T | 136.7/140.5 |
| C1505 | 4030007010 | S.CER C1608 CH 1H 100D-T | T | 130/143.5 |
| C1506 | 4030010760 | S.CER C1608 CH 1H 331J-T | T | 131.3/146.3 |
| C1507 | 4510008540 | S.ELE EEE1CA100SR | T | 142.6/140.8 |
| C1508 | 4030011600 | S.CER C1608 JB 1E 104K-T | B | 128.8/148.8 |
| C1509 | 4030018800 | S.CER C3216 CH 1H 223J-T | T | 135.8/145.1 |
| C1510 | 4030007110 | S.CER C1608 CH 1H 680J-T | T | 136.5/158.9 |
| C1511 | 4510008540 | S.ELE EEE1CA100SR | T | 132.7/150.6 |
| C1512 | 4030011600 | S.CER C1608 JB 1E 104K-T | T | 129.6/149 |
| C1513 | 4030011600 | S.CER C1608 JB 1E 104K-T | T | 129.6/158.1 |
| C1514 | 4510008540 | S.ELE EEE1CA100SR | T | 132.7/156.5 |
| C1515 | 4030007160 | S.CER C1608 CH 1H 181J-T | T | 132.2/160.8 |
| C1516 | 4030009350 | S.CER C1608 CH 1H 3R5B-T | T | 130.9/160.8 |
| C1517 | 4030007110 | S.CER C1608 CH 1H 680J-T | T | 115.3/155 |
| C1518 | 4030018530 | S.CER C3216 CH 1H 103J-T | T | 131.2/132.8 |
| C1519 | 4550003220 | S.TAN TEESVA 1E 105M8R | T | 122.9/140.9 |
| C1520 | 4030006900 | S.CER C1608 JB 1H 103K-T | T | 119.8/140.7 |
| C1521 | 4030012610 | S.CER C2012 JB 1C 474K-T | T | 116.2/142.1 |
| C1522 | 4030007010 | S.CER C1608 CH 1H 100D-T | T | 123.7/143.5 |
| C1523 | 4030010760 | S.CER C1608 CH 1H 331J-T | T | 122.4/146.3 |
| C1524 | 4030018800 | S.CER C3216 CH 1H 223J-T | T | 117.9/145.2 |
| C1525 | 4510008540 | S.ELE EEE1CA100SR | T | 124.9/150.6 |
| C1526 | 4030011600 | S.CER C1608 JB 1E 104K-T | T | 128/149 |
| C1527 | 4030011600 | S.CER C1608 JB 1E 104K-T | T | 128/158.1 |
| C1528 | 4510008540 | S.ELE EEE1CA100SR | T | 124.9/156.5 |
| C1529 | 4030017870 | S.CER C1608 CH 1H 681J-T | T | 125.4/160.8 |
| C1530 | 4030011330 | S.CER C1608 CH 1H 391J-T | T | 126.7/160.8 |
| C1531 | 4510008500 | S.ELE EEE1CA101WP | T | 111.3/167.3 |
| C1532 | 4030011600 | S.CER C1608 JB 1E 104K-T | T | 107.1/167.3 |
| C1533 | 4030011600 | S.CER C1608 JB 1E 104K-T | T | 115.5/167.3 |
| C1534 | 4510008500 | S.ELE EEE1CA101WP | T | 119.7/167.3 |
| C1535 | 4030011600 | S.CER C1608 JB 1E 104K-T | T | 133.7/172.6 |
| C1536 | 4030017870 | S.CER C1608 CH 1H 681J-T | T | 126.2/179.5 |
| C1537 | 4510008500 | S.ELE EEE1CA101WP | T | 111.3/176 |
| C1538 | 4030011600 | S.CER C1608 JB 1E 104K-T | T | 107.1/176 |
| C1539 | 4030011600 | S.CER C1608 JB 1E 104K-T | T | 115.5/176 |
| C1540 | 4510008500 | S.ELE EEE1CA101WP | T | 119.7/176 |
| C1541 | 4030007050 | S.CER C1608 CH 1H 220J-T | T | 124/175 |
| C1651 | 4030006880 | S.CER C1608 JB 1H 472K-T | B | 105.5/144 |
| C1653 | 4030006880 | S.CER C1608 JB 1H 472K-T | B | 109/137.2 |
| C1654 | 4030017810 | S.CER C1608 CH 1H 102J-T | B | 106.9/137.2 |
| C1655 | 4030009530 | S.CER C1608 CH 1H 030B-T | T | 107.6/136.8 |
| C1656 | 4610001970 | S.TRI TZC3P200A110R00 | T | 110.9/136.2 |
| C1657 | 4030010220 | S.CER C2012 CH 1H 102J-T | T | 116.4/122.7 |
| C1658 | 4030010220 | S.CER C2012 CH 1H 102J-T | T | 116.4/130.9 |
| C1659 | 4030011600 | S.CER C1608 JB 1E 104K-T | T | 107.8/120 |
| C1660 | 4030011600 | S.CER C1608 JB 1E 104K-T | B | 134/174 |
| C1661 | 4030011600 | S.CER C1608 JB 1E 104K-T | B | 145.2/171.3 |
| C1662 | 4030011600 | S.CER C1608 JB 1E 104K-T | T | 144.3/178 |
| C1663 | 4030011600 | S.CER C1608 JB 1E 104K-T | T | 135.1/170.2 |
| C1665 | 4030006900 | S.CER C1608 JB 1H 103K-T | T | 138.9/164.1 |
| C1666 | 4030006880 | S.CER C1608 JB 1H 472K-T | B | 113.3/144 |
| C1701 | 4030011600 | S.CER C1608 JB 1E 104K-T | T | 153.4/163 |
| C1702 | 4030011600 | S.CER C1608 JB 1E 104K-T | T | 144.4/163 |
| C1703 | 4510004601 | ELE 16 ME 1000 HC | | |
| C1704 | 4030011600 | S.CER C1608 JB 1E 104K-T | B | 180.1/160.2 |
| C1705 | 4030011600 | S.CER C1608 JB 1E 104K-T | B | 186.4/160.2 |
| C1706 | 4510008520 | S.ELE EEE1CA470SP | T | 172.7/154.8 |
| C1707 | 4030011600 | S.CER C1608 JB 1E 104K-T | T | 149.7/154.8 |
| C1708 | 4030006880 | S.CER C1608 JB 1H 472K-T | T | 175.7/166.8 |
| C1709 | 4030006880 | S.CER C1608 JB 1H 472K-T | T | 172.6/166.8 |
| C1710 | 4030006880 | S.CER C1608 JB 1H 472K-T | T | 169.6/166.8 |
| C1711 | 4030011340 | S.CER C1608 CH 1H 471J-T | T | 171.4/163.5 |
| C1712 | 4030011340 | S.CER C1608 CH 1H 471J-T | T | 167.5/163.5 |
| C1713 | 4030006880 | S.CER C1608 JB 1H 472K-T | B | 165.5/168.8 |
| C1714 | 4030006880 | S.CER C1608 JB 1H 472K-T | B | 153.8/141.8 |
| C1716 | 4030006880 | S.CER C1608 JB 1H 472K-T | B | 154.7/145.1 |
| C1717 | 4030006880 | S.CER C1608 JB 1H 472K-T | B | 152.9/145.1 |
| C1719 | 4030006880 | S.CER C1608 JB 1H 472K-T | B | 151.1/145.1 |
| C1720 | 4030006880 | S.CER C1608 JB 1H 472K-T | B | 155.6/141.8 |
| C1721 | 4030006880 | S.CER C1608 JB 1H 472K-T | B | 157.4/141.8 |
| RL1001 | 6330001750 | RLY FTR-B4CA012Z | | |
| RL1002 | 6330001750 | RLY FTR-B4CA012Z | | |
| RL1003 | 6330001750 | RLY FTR-B4CA012Z | | |
| RL1004 | 6330001750 | RLY FTR-B4CA012Z | | |
| RL1005 | 6330001750 | RLY FTR-B4CA012Z | | |
| RL1006 | 6330001750 | RLY FTR-B4CA012Z | | |
| RL1203 | 6330001750 | RLY FTR-B4CA012Z | | |
| RL1206 | 6330001750 | RLY FTR-B4CA012Z | | |

M.=Mounted side (T: Mounted on the Top side, B: Mounted on the Bottom side)
S.=Surface mount

## [RXPLL-B UNIT]

| REF NO. | ORDER NO. | DESCRIPTION | M. | H/V LOCATION |
|---|---|---|---|---|
| J2 | 6510019991 | S.CNR 52808-2271 (2291) | T | 25/9 |
| J10 | 6510007020 | CNR TMP-J01X-V6 | | |
| J351 | 6510007020 | CNR TMP-J01X-V6 | | |
| J561 | 6510007020 | CNR TMP-J01X-V6 | | |
| J601 | 6510007020 | CNR TMP-J01X-V6 | | |
| J681 | 6510007020 | CNR TMP-J01X-V6 | | |
| J831 | 6510007020 | CNR TMP-J01X-V6 | | |
| J1002 | 6510007020 | CNR TMP-J01X-V6 | | |
| J1101 | 6510007020 | CNR TMP-J01X-V6 | | |
| J1201 | 6510007020 | CNR TMP-J01X-V6 | | |
| J1301 | 6510007020 | CNR TMP-J01X-V6 | | |
| J1501 | 6510018961 | S.CNR B2B-PH-SM4-TB (LF) (SN) | T | 149.6/177.5 |
| J1701 | 6510019981 | S.CNR 52808-1671 (1690) | T | 168/177.2 |
| | | | | |
| W1052 | 9016201006 | WIR 73/98/025/X98/X98 | | |
| W1401 | 9029495075 | JMP 73/98/020/X98/X98 | | |
| W1411 | 7120000480 | S.JMP MJP-0.4-T | T | 125.1/111.6 |
| | | | | |
| EP20 | 6910012350 | S.BEA MMZ1608Y 102BT | T | 85.4/126 |
| EP21 | 6910012350 | S.BEA MMZ1608Y 102BT | T | 88.7/124 |
| EP22 | 6910012350 | S.BEA MMZ1608Y 102BT | T | 90/124 |
| EP101 | 6910012350 | S.BEA MMZ1608Y 102BT | B | 47.6/98.6 |
| EP102 | 6910012350 | S.BEA MMZ1608Y 102BT | B | 47.6/96.8 |
| EP103 | 6910012350 | S.BEA MMZ1608Y 102BT | T | 46/96.8 |
| EP104 | 6910012350 | S.BEA MMZ1608Y 102BT | T | 46/92.9 |
| EP105 | 6910012350 | S.BEA MMZ1608Y 102BT | T | 46/91.6 |
| EP106 | 6910012350 | S.BEA MMZ1608Y 102BT | T | 46/89 |
| EP107 | 6910012350 | S.BEA MMZ1608Y 102BT | B | 47.6/100.4 |
| EP1701 | 6910012350 | S.BEA MMZ1608Y 102BT | T | 170.1/163.5 |
| EP1702 | 6910012350 | S.BEA MMZ1608Y 102BT | T | 168.8/163.5 |
| EP1801 | 6910012350 | S.BEA MMZ1608Y 102BT | B | 153/132.7 |
| EP1802 | 6910012350 | S.BEA MMZ1608Y 102BT | B | 142.5/18.8 |
| EP1804 | 6910012350 | S.BEA MMZ1608Y 102BT | B | 112.5/138.7 |
| EP1805 | 6910012350 | S.BEA MMZ1608Y 102BT | B | 150.2/141.8 |
| EP1806 | 6910012350 | S.BEA MMZ1608Y 102BT | B | 128.6/64.3 |
| EP1807 | 6910012350 | S.BEA MMZ1608Y 102BT | B | 117.4/50.2 |
| EP1808 | 6910012350 | S.BEA MMZ1608Y 102BT | B | 137/166.9 |
| EP1809 | 6910012350 | S.BEA MMZ1608Y 102BT | B | 147.4/127.4 |
| EP1810 | 6910012350 | S.BEA MMZ1608Y 102BT | B | 131.3/64.2 |
| EP1811 | 6910012350 | S.BEA MMZ1608Y 102BT | T | 160.7/56.3 |
| EP1812 | 6910012350 | S.BEA MMZ1608Y 102BT | B | 153.5/137.4 |
| EP1813 | 6910012350 | S.BEA MMZ1608Y 102BT | B | 132.6/65.7 |
| EP1814 | 6910012350 | S.BEA MMZ1608Y 102BT | B | 147.2/22.3 |
| EP1815 | 6910012350 | S.BEA MMZ1608Y 102BT | B | 156/62.6 |
| EP1816 | 6910012350 | S.BEA MMZ1608Y 102BT | B | 160.4/20.9 |
| EP1817 | 6910012350 | S.BEA MMZ1608Y 102BT | B | 168.6/62.2 |
| EP1818 | 6910012350 | S.BEA MMZ1608Y 102BT | B | 151.2/133.2 |
| EP1819 | 6910012350 | S.BEA MMZ1608Y 102BT | B | 145.6/127.9 |
| EP1820 | 6910012350 | S.BEA MMZ1608Y 102BT | B | 148.6/19.8 |
| EP1821 | 6910012350 | S.BEA MMZ1608Y 102BT | B | 148.6/14.1 |
| EP1825 | 6910012350 | S.BEA MMZ1608Y 102BT | B | 126.6/7 |
| EP1826 | 6910012350 | S.BEA MMZ1608Y 102BT | B | 151.5/137.7 |
| EP1830 | 6910012350 | S.BEA MMZ1608Y 102BT | B | 141.3/135.2 |
| EP1831 | 6910012350 | S.BEA MMZ1608Y 102BT | B | 143.4/128.5 |
| EP1832 | 6910012350 | S.BEA MMZ1608Y 102BT | B | 149.2/137.5 |
| EP1833 | 6910012350 | S.BEA MMZ1608Y 102BT | B | 147.2/133.5 |
| EP1834 | 6910012350 | S.BEA MMZ1608Y 102BT | T | 115.8/108.3 |
| EP1835 | 6910012350 | S.BEA MMZ1608Y 102BT | B | 141.6/128.5 |
| EP1836 | 6910012350 | S.BEA MMZ1608Y 102BT | T | 111/110.2 |
| EP1837 | 6910012350 | S.BEA MMZ1608Y 102BT | B | 145.8/134.1 |
| EP1838 | 6910012350 | S.BEA MMZ1608Y 102BT | T | 116.3/106.1 |

## [BPF UNIT]

| REF NO. | ORDER NO. | DESCRIPTION | M. | H/V LOCATION |
|---|---|---|---|---|
| IC101 | 1130011510 | S.IC BU2099FV-E2 | T | 9.5/77.6 |
| IC102 | 1130011510 | S.IC BU2099FV-E2 | T | 9.7/100.9 |
| IC401 | 1130011510 | S.IC BU2099FV-E2 | T | 10.3/39.3 |
| IC402 | 1130011510 | S.IC BU2099FV-E2 | T | 9.6/59.4 |
| | | | | |
| Q355 | 1590001330 | S.TR DTA114EUA T106 | T | 191.6/68.1 |
| Q381 | 1590000680 | S.TR DTC114EUA T106 | T | 232/60.3 |
| Q383 | 1590000680 | S.TR DTC114EUA T106 | T | 229.2/51.9 |
| Q384 | 1590000680 | S.TR DTC114EUA T106 | T | 226.2/51.9 |
| Q385 | 1590000680 | S.TR DTC114EUA T106 | T | 233.1/54.7 |
| Q386 | 1590000430 | S.TR DTC144EUA T106 | T | 230.1/54.7 |
| Q387 | 1590000680 | S.TR DTC114EUA T106 | T | 228.8/60.2 |
| Q401 | 1530002841 | S.TR 2SC4116-Y (TE85R,F) | T | 234.5/108.2 |
| Q402 | 1530002060 | S.TR 2SC4081 T106 R | B | 224.2/99.2 |
| Q403 | 1590001330 | S.TR DTA114EUA T106 | B | 227.6/100.2 |
| Q404 | 1590000430 | S.TR DTC144EUA T106 | T | 232/108.2 |
| Q855 | 1590001330 | S.TR DTA114EUA T106 | T | 192/53 |
| Q871 | 1590001330 | S.TR DTA114EUA T106 | B | 234.6/18.8 |
| Q872 | 1530002060 | S.TR 2SC4081 T106 R | B | 231.2/19.5 |
| Q873 | 1530002841 | S.TR 2SC4116-Y (TE85R,F) | B | 231.2/16.6 |
| Q874 | 1590000430 | S.TR DTC144EUA T106 | T | 195.7/57.4 |
| Q900 | 1590001330 | S.TR DTA114EUA T106 | B | 217.4/116.1 |
| Q901 | 1530003851 | S.TR 2SC5551F-TD-E | T | 210.3/113.5 |
| Q902 | 1590001330 | S.TR DTA114EUA T106 | T | 200.6/115.1 |
| Q903 | 1530003851 | S.TR 2SC5551F-TD-E | T | 189.4/113.5 |
| Q950 | 1590001330 | S.TR DTA114EUA T106 | B | 215/3.2 |
| Q951 | 1530003851 | S.TR 2SC5551F-TD-E | T | 209.8/17.6 |
| Q952 | 1590001330 | S.TR DTA114EUA T106 | B | 199.1/4 |
| Q953 | 1530003851 | S.TR 2SC5551F-TD-E | T | 188.6/17.6 |
| | | | | |
| D1 | 1790001250 | S.DIO MA2S111-(TX) | T | 184/75.2 |
| D21 | 1790001250 | S.DIO MA2S111-(TX) | B | 167.1/77.7 |
| D51 | 1790001250 | S.DIO MA2S111-(TX) | T | 163.7/68.6 |
| D81 | 1790001250 | S.DIO MA2S111-(TX) | B | 141.5/68.1 |
| D111 | 1790001250 | S.DIO MA2S111-(TX) | T | 107.4/67.6 |
| D141 | 1790001250 | S.DIO MA2S111-(TX) | T | 94.7/70.3 |
| D171 | 1790001250 | S.DIO MA2S111-(TX) | B | 81.6/74.3 |
| D201 | 1790001250 | S.DIO MA2S111-(TX) | B | 70.2/73.1 |
| D231 | 1790001250 | S.DIO MA2S111-(TX) | T | 49.4/69.1 |
| D261 | 1790001250 | S.DIO MA2S111-(TX) | B | 35.4/70.1 |
| D291 | 1790001250 | S.DIO MA2S111-(TX) | B | 203.9/71.9 |
| D321 | 1790001250 | S.DIO MA2S111-(TX) | T | 204/97.5 |
| D351 | 1790001250 | S.DIO MA2S111-(TX) | T | 189/94.9 |
| D352 | 1790001250 | S.DIO MA2S111-(TX) | T | 189/88.7 |
| D353 | 1790001250 | S.DIO MA2S111-(TX) | T | 189/82.5 |
| D354 | 1790001250 | S.DIO MA2S111-(TX) | T | 189/76.3 |
| D355 | 1790001250 | S.DIO MA2S111-(TX) | T | 193.9/66.2 |
| D371 | 1790001250 | S.DIO MA2S111-(TX) | T | 218.5/69.9 |
| D373 | 1790001250 | S.DIO MA2S111-(TX) | B | 239.8/116.1 |
| D391 | 1750000581 | S.DIO 1SV307 (TPH3,F) | B | 233.2/49.9 |
| D392 | 1750000581 | S.DIO 1SV307 (TPH3,F) | B | 236/52.9 |
| D393 | 1750000581 | S.DIO 1SV307 (TPH3,F) | B | 235.3/63.7 |
| D401 | 1790001250 | S.DIO MA2S111-(TX) | B | 225.6/95.5 |
| D402 | 1790000980 | S.DIO MA742 (TX) | B | 233.9/113.2 |
| D501 | 1790001250 | S.DIO MA2S111-(TX) | B | 184.1/45.6 |
| D531 | 1790001250 | S.DIO MA2S111-(TX) | B | 167.7/53.7 |
| D561 | 1790001250 | S.DIO MA2S111-(TX) | B | 164.4/42.5 |
| D591 | 1790001250 | S.DIO MA2S111-(TX) | B | 144.1/53.4 |
| D621 | 1790001250 | S.DIO MA2S111-(TX) | T | 107.6/52.6 |
| D651 | 1790001250 | S.DIO MA2S111-(TX) | T | 94.9/49.6 |
| D681 | 1790001250 | S.DIO MA2S111-(TX) | B | 81.5/45.7 |
| D711 | 1790001250 | S.DIO MA2S111-(TX) | B | 70/44.3 |
| D741 | 1790001250 | S.DIO MA2S111-(TX) | B | 51.4/50.5 |
| D771 | 1790001250 | S.DIO MA2S111-(TX) | B | 36.5/43.7 |
| D801 | 1790001250 | S.DIO MA2S111-(TX) | B | 203.8/47.4 |
| D831 | 1790001250 | S.DIO MA2S111-(TX) | T | 203.7/22.1 |
| D851 | 1790001250 | S.DIO MA2S111-(TX) | T | 189/27.9 |
| D852 | 1790001250 | S.DIO MA2S111-(TX) | T | 189/33.1 |
| D853 | 1790001250 | S.DIO MA2S111-(TX) | T | 189/39.3 |
| D854 | 1790001250 | S.DIO MA2S111-(TX) | T | 189/45.5 |
| D855 | 1790001250 | S.DIO MA2S111-(TX) | T | 194/52.8 |
| D871 | 1790001250 | S.DIO MA2S111-(TX) | B | 241.4/18 |
| D872 | 1790000980 | S.DIO MA742 (TX) | B | 247.7/15.6 |
| D873 | 1790001250 | S.DIO MA2S111-(TX) | B | 243/94.1 |
| D900 | 1790001250 | S.DIO MA2S111-(TX) | B | 218.9/100.4 |
| D901 | 1790001250 | S.DIO MA2S111-(TX) | T | 207.9/100.7 |
| D902 | 1790001250 | S.DIO MA2S111-(TX) | B | 197/100.2 |
| D903 | 1790001250 | S.DIO MA2S111-(TX) | B | 186.4/100.5 |
| D950 | 1790001250 | S.DIO MA2S111-(TX) | B | 212.3/3.9 |
| D951 | 1790001250 | S.DIO MA2S111-(TX) | T | 204.4/4.5 |
| D952 | 1790001250 | S.DIO MA2S111-(TX) | B | 195.7/4.9 |
| D953 | 1790001250 | S.DIO MA2S111-(TX) | B | 182.6/5.3 |
| D954 | 1790001250 | S.DIO MA2S111-(TX) | T | 235.4/16.2 |
| | | | | |
| L1 | 6200005521 | S.COL NLV25T-470J | T | 186.7/100.6 |
| L2 | 6200005521 | S.COL NLV25T-470J | B | 183.8/77.2 |
| L3 | 6200010830 | S.COL C2520C-3R3G-A | T | 179.2/88.5 |
| L4 | 6200010830 | S.COL C2520C-3R3G-A | T | 179.2/80.2 |
| L5 | 6200010830 | S.COL C2520C-3R3G-A | T | 178.2/84.3 |

M.=Mounted side (T: Mounted on the Top side, B: Mounted on the Bottom side)
S.=Surface mount

## [BPF UNIT]

| REF NO. | ORDER NO. | DESCRIPTION | M. | H/V LOCATION |
|---|---|---|---|---|
| L6 | 6200010830 | S.COL C2520C-3R3G-A | T | 178/76.2 |
| L21 | 6200005521 | S.COL NLV25T-470J | B | 166/107.5 |
| L22 | 6200005521 | S.COL NLV25T-470J | B | 163/107.5 |
| L23 | 6140004040 | COL LR-443 | | |
| L24 | 6140004050 | COL LR-444 | | |
| L25 | 6140004050 | COL LR-444 | | |
| L26 | 6140004050 | COL LR-444 | | |
| L27 | 6140004040 | COL LR-443 | | |
| L51 | 6200005521 | S.COL NLV25T-470J | B | 154.3/111.3 |
| L52 | 6200005521 | S.COL NLV25T-470J | B | 151.3/107.2 |
| L53 | 6140004060 | COL LR-445 | | |
| L54 | 6140004080 | COL LR-446 | | |
| L55 | 6140004080 | COL LR-446 | | |
| L56 | 6140004080 | COL LR-446 | | |
| L57 | 6140004060 | COL LR-445 | | |
| L81 | 6200005521 | S.COL NLV25T-470J | B | 142.1/109.6 |
| L82 | 6200005521 | S.COL NLV25T-470J | B | 139.1/107.3 |
| L83 | 6140004090 | COL LR-447 | | |
| L84 | 6140004230 | COL LR-458 | | |
| L85 | 6140004230 | COL LR-458 | | |
| L86 | 6140004230 | COL LR-458 | | |
| L87 | 6140004090 | COL LR-447 | | |
| L111 | 6200005521 | S.COL NLV25T-470J | B | 118.1/109.1 |
| L112 | 6200005521 | S.COL NLV25T-470J | B | 114.5/109.1 |
| L113 | 6140004090 | COL LR-447 | | |
| L114 | 6140004100 | COL LR-448 | | |
| L115 | 6140004100 | COL LR-448 | | |
| L116 | 6140004100 | COL LR-448 | | |
| L117 | 6140004090 | COL LR-447 | | |
| L141 | 6200005521 | S.COL NLV25T-470J | B | 106.8/111.4 |
| L142 | 6200005521 | S.COL NLV25T-470J | B | 100.3/107.6 |
| L143 | 6140004110 | COL LR-449 | | |
| L144 | 6140004120 | COL LR-450 | | |
| L145 | 6140004120 | COL LR-450 | | |
| L146 | 6140004120 | COL LR-450 | | |
| L147 | 6140004110 | COL LR-449 | | |
| L171 | 6200005521 | S.COL NLV25T-470J | B | 84.9/116.9 |
| L172 | 6200005521 | S.COL NLV25T-470J | B | 81.8/115.4 |
| L173 | 6140004140 | COL LR-451 | | |
| L174 | 6140004150 | COL LR-452 | | |
| L175 | 6140004150 | COL LR-452 | | |
| L176 | 6140004150 | COL LR-452 | | |
| L177 | 6140004140 | COL LR-451 | | |
| L201 | 6200007021 | S.COL NLV25T-270J | B | 61.9/112 |
| L202 | 6200007021 | S.COL NLV25T-270J | B | 59.4/109.7 |
| L203 | 6140004160 | COL LR-453 | | |
| L204 | 6140004180 | COL LR-454 | | |
| L205 | 6140004180 | COL LR-454 | | |
| L206 | 6140004180 | COL LR-454 | | |
| L207 | 6140004160 | COL LR-453 | | |
| L231 | 6200005011 | S.COL NLV25T-100J | B | 44.2/116.9 |
| L232 | 6200005011 | S.COL NLV25T-100J | B | 44.1/114.3 |
| L233 | 6140004190 | COL LR-455 | | |
| L234 | 6140004210 | COL LR-456 | | |
| L235 | 6140004210 | COL LR-456 | | |
| L236 | 6140004210 | COL LR-456 | | |
| L237 | 6140004190 | COL LR-455 | | |
| L261 | 6200009141 | S.COL NLV25T-6R8J | B | 27.3/111.4 |
| L262 | 6200009141 | S.COL NLV25T-6R8J | B | 24.8/109.7 |
| L263 | 6140004220 | COL LR-457 | | |
| L264 | 6140004160 | COL LR-453 | | |
| L265 | 6140004160 | COL LR-453 | | |
| L266 | 6140004160 | COL LR-453 | | |
| L267 | 6140004220 | COL LR-457 | | |
| L291 | 6200003281 | S.COL NLV25T-2R2J | B | 222.8/74.1 |
| L292 | 6200003281 | S.COL NLV25T-2R2J | B | 214/75.1 |
| L293 | 6200008090 | S.COL LQW2BHN68NJ03L | T | 214.7/79.6 |
| L294 | 6200003041 | S.COL NLV32T-R68J | T | 213.5/82.7 |
| L295 | 6200008090 | S.COL LQW2BHN68NJ03L | T | 210.1/79.6 |
| L296 | 6200010870 | S.COL C2520C-R33G-A | T | 209.9/76.6 |
| L321 | 6200003281 | S.COL NLV25T-2R2J | B | 209.5/93.5 |
| L322 | 6200003281 | S.COL NLV25T-2R2J | B | 213.2/95.3 |
| L323 | 6200003011 | S.COL NLV32T-R27J | T | 214.2/91 |
| L324 | 6200003001 | S.COL NLV32T-R22J | T | 209.7/87.1 |
| L325 | 6200003011 | S.COL NLV32T-R27J | T | 209.6/93.2 |
| L371 | 6140004390 | COL LR-459 | | |
| L372 | 6140004390 | COL LR-459 | | |
| L373 | 6140003530 | COL LR-395 | | |
| L391 | 6200005491 | S.COL NLV32T-331J | T | 230.2/48.4 |
| L392 | 6200005491 | S.COL NLV32T-331J | T | 231.7/64 |
| L393 | 6200003211 | S.COL NLV32T-820J | B | 231.7/42.7 |
| L394 | 6200005491 | S.COL NLV32T-331J | B | 236.2/46.6 |
| L395 | 6200005491 | S.COL NLV32T-331J | B | 225.5/48.3 |
| L501 | 6200005521 | S.COL NLV25T-470J | B | 183.7/36.2 |
| L502 | 6200005521 | S.COL NLV25T-470J | B | 184.6/41 |
| L504 | 6200010830 | S.COL C2520C-3R3G-A | T | 178.7/33.1 |
| L505 | 6200010830 | S.COL C2520C-3R3G-A | T | 177.8/41.5 |
| L506 | 6200010830 | S.COL C2520C-3R3G-A | T | 178.9/37.6 |
| L507 | 6200010830 | S.COL C2520C-3R3G-A | T | 179.1/45 |
| L531 | 6200005521 | S.COL NLV25T-470J | B | 167.5/13 |
| L532 | 6200005521 | S.COL NLV25T-470J | B | 170.5/13 |
| L533 | 6140004040 | COL LR-443 | | |

## [BPF UNIT]

| REF NO. | ORDER NO. | DESCRIPTION | M. | H/V LOCATION |
|---|---|---|---|---|
| L534 | 6140004050 | COL LR-444 | | |
| L535 | 6140004050 | COL LR-444 | | |
| L536 | 6140004050 | COL LR-444 | | |
| L537 | 6140004040 | COL LR-443 | | |
| L561 | 6200005521 | S.COL NLV25T-470J | B | 149.9/12.4 |
| L562 | 6200005521 | S.COL NLV25T-470J | B | 153.8/16.5 |
| L563 | 6140004060 | COL LR-445 | | |
| L564 | 6140004080 | COL LR-446 | | |
| L565 | 6140004080 | COL LR-446 | | |
| L566 | 6140004080 | COL LR-446 | | |
| L567 | 6140004060 | COL LR-445 | | |
| L591 | 6200005521 | S.COL NLV25T-470J | B | 139.9/9.2 |
| L592 | 6200005521 | S.COL NLV25T-470J | B | 142.7/9.2 |
| L593 | 6140004090 | COL LR-447 | | |
| L594 | 6140004230 | COL LR-458 | | |
| L595 | 6140004230 | COL LR-458 | | |
| L596 | 6140004230 | COL LR-458 | | |
| L597 | 6140004090 | COL LR-447 | | |
| L621 | 6200005521 | S.COL NLV25T-470J | B | 116.8/9.5 |
| L622 | 6200005521 | S.COL NLV25T-470J | B | 122.4/6.3 |
| L623 | 6140004090 | COL LR-447 | | |
| L624 | 6140004100 | COL LR-448 | | |
| L625 | 6140004100 | COL LR-448 | | |
| L626 | 6140004100 | COL LR-448 | | |
| L627 | 6140004090 | COL LR-447 | | |
| L651 | 6200005521 | S.COL NLV25T-470J | B | 105.4/13 |
| L652 | 6200005521 | S.COL NLV25T-470J | B | 108/9.5 |
| L653 | 6140004110 | COL LR-449 | | |
| L654 | 6140004120 | COL LR-450 | | |
| L655 | 6140004120 | COL LR-450 | | |
| L656 | 6140004120 | COL LR-450 | | |
| L657 | 6140004110 | COL LR-449 | | |
| L681 | 6200005521 | S.COL NLV25T-470J | B | 77.4/6.2 |
| L682 | 6200005521 | S.COL NLV25T-470J | B | 80.4/3.8 |
| L683 | 6140004140 | COL LR-451 | | |
| L684 | 6140004150 | COL LR-452 | | |
| L685 | 6140004150 | COL LR-452 | | |
| L686 | 6140004150 | COL LR-452 | | |
| L687 | 6140004140 | COL LR-451 | | |
| L711 | 6200007021 | S.COL NLV25T-270J | B | 56.4/10.8 |
| L712 | 6200007021 | S.COL NLV25T-270J | B | 61.1/8.8 |
| L713 | 6140004160 | COL LR-453 | | |
| L714 | 6140004180 | COL LR-454 | | |
| L715 | 6140004180 | COL LR-454 | | |
| L716 | 6140004180 | COL LR-454 | | |
| L717 | 6140004160 | COL LR-453 | | |
| L741 | 6200005011 | S.COL NLV25T-100J | B | 44.2/6.2 |
| L742 | 6200005011 | S.COL NLV25T-100J | B | 46.2/3.4 |
| L743 | 6140004190 | COL LR-455 | | |
| L744 | 6140004210 | COL LR-456 | | |
| L745 | 6140004210 | COL LR-456 | | |
| L746 | 6140004210 | COL LR-456 | | |
| L747 | 6140004190 | COL LR-455 | | |
| L771 | 6200009141 | S.COL NLV25T-6R8J | B | 23.4/10.6 |
| L772 | 6200009141 | S.COL NLV25T-6R8J | B | 27.1/9 |
| L773 | 6140004220 | COL LR-457 | | |
| L774 | 6140004160 | COL LR-453 | | |
| L775 | 6140004160 | COL LR-453 | | |
| L776 | 6140004160 | COL LR-453 | | |
| L777 | 6140004220 | COL LR-457 | | |
| L801 | 6200003281 | S.COL NLV25T-2R2J | B | 214.4/45.7 |
| L802 | 6200003281 | S.COL NLV25T-2R2J | B | 211.8/42.4 |
| L805 | 6200008090 | S.COL LQW2BHN68NJ03L | T | 214.6/41.4 |
| L806 | 6200003041 | S.COL NLV32T-R68J | T | 211.5/36.9 |
| L807 | 6200008090 | S.COL LQW2BHN68NJ03L | T | 209.7/40 |
| L808 | 6200010870 | S.COL C2520C-R33G-A | T | 209.8/43 |
| L831 | 6200003281 | S.COL NLV25T-2R2J | B | 211.6/26.7 |
| L832 | 6200003281 | S.COL NLV25T-2R2J | B | 213.2/23.7 |
| L833 | 6200003011 | S.COL NLV32T-R27J | T | 214.2/29.7 |
| L834 | 6200003001 | S.COL NLV32T-R22J | T | 209.7/32.9 |
| L835 | 6200003011 | S.COL NLV32T-R27J | T | 209.4/27.3 |
| L900 | 6200001831 | S.COL NLV32T-100J | B | 213.2/113.1 |
| L901 | 6200003950 | S.COL HF50ACC 322513-T | B | 11.6/20.4 |
| L902 | 6200003950 | S.COL HF50ACC 322513-T | B | 11.7/16.4 |
| L903 | 6200001831 | S.COL NLV32T-100J | T | 7.4/27.5 |
| L904 | 6200001831 | S.COL NLV32T-100J | T | 11.6/27.5 |
| L905 | 6140004380 | COL LR-498 | | |
| L906 | 6200009690 | S.COL LQH43CN101K03L | T | 216.9/114.5 |
| L907 | 6200001831 | S.COL NLV32T-100J | B | 193.1/113.1 |
| L908 | 6140004380 | COL LR-498 | | |
| L909 | 6200009690 | S.COL LQH43CN101K03L | T | 196/115.1 |
| L950 | 6200001831 | S.COL NLV32T-100J | B | 211.8/17 |
| L951 | 6140004380 | COL LR-498 | | |
| L952 | 6200009690 | S.COL LQH43CN101K03L | T | 213.8/3.4 |
| L953 | 6200001831 | S.COL NLV32T-100J | B | 191.1/17 |
| L954 | 6140004380 | COL LR-498 | | |
| L955 | 6200009690 | S.COL LQH43CN101K03L | T | 196/3.3 |
| R1 | 7030003640 | S.RES ERJ3GEYJ 473 V (47 k) | T | 181.4/92.2 |
| R3 | 7030003860 | S.RES ERJ3GE JPW V | T | 182.1/90.3 |
| R101 | 7030003320 | S.RES ERJ3GEYJ 101 V (100) | T | 7.2/67.9 |

M.=Mounted side (T: Mounted on the Top side, B: Mounted on the Bottom side)
S.=Surface mount

## [BPF UNIT]

| REF NO. | ORDER NO. | DESCRIPTION | M. | H/V LOCATION |
|---|---|---|---|---|
| R102 | 7030003320 | S.RES ERJ3GEYJ 101 V (100) | T | 7.9/71.3 |
| R103 | 7030003320 | S.RES ERJ3GEYJ 101 V (100) | T | 8.7/67.9 |
| R104 | 7030003320 | S.RES ERJ3GEYJ 101 V (100) | T | 9.3/71 |
| R105 | 7030003320 | S.RES ERJ3GEYJ 101 V (100) | T | 10.6/71 |
| R106 | 7030003320 | S.RES ERJ3GEYJ 101 V (100) | T | 11.3/89.9 |
| R107 | 7030003320 | S.RES ERJ3GEYJ 101 V (100) | T | 11.6/87.9 |
| R108 | 7030003320 | S.RES ERJ3GEYJ 101 V (100) | T | 11.1/83.2 |
| R117 | 7030003320 | S.RES ERJ3GEYJ 101 V (100) | T | 9.8/83.5 |
| R118 | 7030003320 | S.RES ERJ3GEYJ 101 V (100) | T | 8.5/83.5 |
| R119 | 7030003320 | S.RES ERJ3GEYJ 101 V (100) | T | 7.4/87.2 |
| R120 | 7030003320 | S.RES ERJ3GEYJ 101 V (100) | T | 6.7/83.2 |
| R121 | 7030003320 | S.RES ERJ3GEYJ 101 V (100) | T | 6.9/92.2 |
| R122 | 7030003320 | S.RES ERJ3GEYJ 101 V (100) | T | 7.1/94.8 |
| R123 | 7030003320 | S.RES ERJ3GEYJ 101 V (100) | B | 10/95.5 |
| R124 | 7030003320 | S.RES ERJ3GEYJ 101 V (100) | T | 11/94.3 |
| R133 | 7030003560 | S.RES ERJ3GEYJ 103 V (10 k) | T | 191.2/55.8 |
| R134 | 7030003320 | S.RES ERJ3GEYJ 101 V (100) | B | 10/98.9 |
| R141 | 7030003360 | S.RES ERJ3GEYJ 221 V (220) | B | 5.6/14 |
| R142 | 7030003360 | S.RES ERJ3GEYJ 221 V (220) | B | 5.6/15.7 |
| R143 | 7030003360 | S.RES ERJ3GEYJ 221 V (220) | B | 5.1/19.2 |
| R351 | 7030003340 | S.RES ERJ3GEYJ 151 V (150) | B | 197.7/90.7 |
| R352 | 7030003300 | S.RES ERJ3GEYJ 680 V (68) | B | 193.9/87.5 |
| R354 | 7030003280 | S.RES ERJ3GEYJ 470 V (47) | B | 200.9/84.8 |
| R355 | 7030003320 | S.RES ERJ3GEYJ 101 V (100) | B | 193.9/81.3 |
| R357 | 7030003240 | S.RES ERJ3GEYJ 220 V (22) | B | 197.8/71.6 |
| R358 | 7030003350 | S.RES ERJ3GEYJ 181 V (180) | B | 194.4/70.3 |
| R360 | 7030003320 | S.RES ERJ3GEYJ 101 V (100) | T | 191.8/66.1 |
| R371 | 7030003320 | S.RES ERJ3GEYJ 101 V (100) | T | 217.4/71.2 |
| R372 | 7030003320 | S.RES ERJ3GEYJ 101 V (100) | B | 209.5/61.9 |
| R373 | 7030003320 | S.RES ERJ3GEYJ 101 V (100) | B | 209.5/58.9 |
| R381 | 7030003520 | S.RES ERJ3GEYJ 472 V (4.7 k) | T | 231.4/51.9 |
| R382 | 7030003360 | S.RES ERJ3GEYJ 221 V (220) | B | 239.8/112.7 |
| R383 | 7030003680 | S.RES ERJ3GEYJ 104 V (100 k) | T | 232.3/49.1 |
| R384 | 7030003420 | S.RES ERJ3GEYJ 681 V (680) | B | 236/49.9 |
| R385 | 7030003420 | S.RES ERJ3GEYJ 681 V (680) | B | 231.3/46.7 |
| R386 | 7030003480 | S.RES ERJ3GEYJ 222 V (2.2 k) | B | 237.6/62.6 |
| R387 | 7030003560 | S.RES ERJ3GEYJ 103 V (10 k) | B | 238.8/55.5 |
| R388 | 7540000130 | ABS 2P-50A-301 | | |
| R389 | 7030003420 | S.RES ERJ3GEYJ 681 V (680) | T | 235/65.4 |
| R390 | 7030003560 | S.RES ERJ3GEYJ 103 V (10 k) | T | 233/51.9 |
| R391 | 7030003680 | S.RES ERJ3GEYJ 104 V (100 k) | T | 234.3/51.9 |
| R392 | 7030003420 | S.RES ERJ3GEYJ 681 V (680) | B | 234.7/49.9 |
| R393 | 7030003420 | S.RES ERJ3GEYJ 681 V (680) | B | 231.3/48 |
| R394 | 7030003420 | S.RES ERJ3GEYJ 681 V (680) | T | 235/64.1 |
| R395 | 7030003420 | S.RES ERJ3GEYJ 681 V (680) | B | 235.2/56.4 |
| R396 | 7030003420 | S.RES ERJ3GEYJ 681 V (680) | B | 235.2/55.1 |
| R401 | 7030003360 | S.RES ERJ3GEYJ 221 V (220) | B | 227.6/96.2 |
| R402 | 7030003680 | S.RES ERJ3GEYJ 104 V (100 k) | T | 234.5/111.6 |
| R403 | 7030003480 | S.RES ERJ3GEYJ 222 V (2.2 k) | T | 231.9/110.3 |
| R404 | 7030003860 | S.RES ERJ3GE JPW V | T | 234.5/110.3 |
| R441 | 7030003360 | S.RES ERJ3GEYJ 221 V (220) | B | 11/24.4 |
| R442 | 7030003360 | S.RES ERJ3GEYJ 221 V (220) | B | 8.2/23.4 |
| R451 | 7030003320 | S.RES ERJ3GEYJ 101 V (100) | T | 10.6/32.9 |
| R452 | 7030003320 | S.RES ERJ3GEYJ 101 V (100) | T | 11.9/33.1 |
| R453 | 7030003320 | S.RES ERJ3GEYJ 101 V (100) | T | 13.2/33.1 |
| R454 | 7030003320 | S.RES ERJ3GEYJ 101 V (100) | T | 14.5/33.1 |
| R455 | 7030003320 | S.RES ERJ3GEYJ 101 V (100) | T | 14.5/36.9 |
| R456 | 7030003320 | S.RES ERJ3GEYJ 101 V (100) | T | 11.1/46.9 |
| R457 | 7030003320 | S.RES ERJ3GEYJ 101 V (100) | T | 8.9/46.3 |
| R458 | 7030003320 | S.RES ERJ3GEYJ 101 V (100) | T | 8.9/47.6 |
| R467 | 7030003320 | S.RES ERJ3GEYJ 101 V (100) | T | 10.6/49.6 |
| R468 | 7030003320 | S.RES ERJ3GEYJ 101 V (100) | T | 13.6/50.2 |
| R469 | 7030003320 | S.RES ERJ3GEYJ 101 V (100) | T | 7.6/49.4 |
| R470 | 7030003320 | S.RES ERJ3GEYJ 101 V (100) | T | 6.9/50.7 |
| R471 | 7030003320 | S.RES ERJ3GEYJ 101 V (100) | T | 6.2/52.6 |
| R472 | 7030003320 | S.RES ERJ3GEYJ 101 V (100) | T | 9.2/53 |
| R473 | 7030003320 | S.RES ERJ3GEYJ 101 V (100) | T | 10.5/53.7 |
| R474 | 7030003320 | S.RES ERJ3GEYJ 101 V (100) | T | 11.8/54.2 |
| R475 | 7030003320 | S.RES ERJ3GEYJ 101 V (100) | T | 10.7/63.9 |
| R481 | 7030003560 | S.RES ERJ3GEYJ 103 V (10 k) | B | 196.9/55.9 |
| R501 | 7030003640 | S.RES ERJ3GEYJ 473 V (47 k) | T | 183/30 |
| R503 | 7030003860 | S.RES ERJ3GE JPW V | T | 182.2/31.9 |
| R851 | 7030003340 | S.RES ERJ3GEYJ 151 V (150) | B | 198.2/32.1 |
| R852 | 7030003300 | S.RES ERJ3GEYJ 680 V (68) | B | 193.5/32.1 |
| R854 | 7030003280 | S.RES ERJ3GEYJ 470 V (47) | B | 200.9/34.7 |
| R855 | 7030003320 | S.RES ERJ3GEYJ 101 V (100) | B | 193.5/38.3 |
| R857 | 7030003240 | S.RES ERJ3GEYJ 220 V (22) | B | 197.9/48.2 |
| R858 | 7030003350 | S.RES ERJ3GEYJ 181 V (180) | B | 193.8/49.7 |
| R860 | 7030003320 | S.RES ERJ3GEYJ 101 V (100) | T | 192/51 |
| R871 | 7030003360 | S.RES ERJ3GEYJ 221 V (220) | B | 238/19.5 |
| R872 | 7030003680 | S.RES ERJ3GEYJ 104 V (100 k) | B | 236.5/14.4 |
| R873 | 7030003480 | S.RES ERJ3GEYJ 222 V (2.2 k) | B | 239.6/16 |
| R874 | 7030003860 | S.RES ERJ3GE JPW V | B | 236.5/16 |
| R900 | 7030003280 | S.RES ERJ3GEYJ 470 V (47) | B | 212.8/117.1 |
| R901 | 7030003440 | S.RES ERJ3GEYJ 102 V (1 k) | T | 207.2/117.4 |
| R902 | 7030003530 | S.RES ERJ3GEYJ 562 V (5.6 k) | T | 210.4/116.6 |
| R903 | 7030003380 | S.RES ERJ3GEYJ 331 V (330) | B | 203.9/113.3 |
| R904 | 7030003220 | S.RES ERJ3GEYJ 150 V (15) | B | 206.3/111.6 |
| R905 | 7030003380 | S.RES ERJ3GEYJ 331 V (330) | B | 203.3/111.8 |
| R906 | 7030003320 | S.RES ERJ3GEYJ 101 V (100) | T | 12.5/92.8 |
| R907 | 7030003320 | S.RES ERJ3GEYJ 101 V (100) | T | 13.8/92.8 |
| R908 | 7030003280 | S.RES ERJ3GEYJ 470 V (47) | B | 194.5/116.4 |

## [BPF UNIT]

| REF NO. | ORDER NO. | DESCRIPTION | M. | H/V LOCATION |
|---|---|---|---|---|
| R909 | 7030003440 | S.RES ERJ3GEYJ 102 V (1 k) | T | 185.4/115.9 |
| R910 | 7030003530 | S.RES ERJ3GEYJ 562 V (5.6 k) | T | 189.6/116.7 |
| R911 | 7030003320 | S.RES ERJ3GEYJ 101 V (100) | B | 209.4/110.8 |
| R912 | 7030003320 | S.RES ERJ3GEYJ 101 V (100) | B | 187.5/111.2 |
| R913 | 7030004050 | S.RES ERJ3GEYJ 1R0 V (1) | B | 189.7/106.1 |
| R950 | 7030003280 | S.RES ERJ3GEYJ 470 V (47) | B | 210.2/20 |
| R951 | 7030003440 | S.RES ERJ3GEYJ 102 V (1 k) | T | 207.7/21.4 |
| R952 | 7030003530 | S.RES ERJ3GEYJ 562 V (5.6 k) | T | 211/20.8 |
| R953 | 7030003380 | S.RES ERJ3GEYJ 331 V (330) | B | 203.4/18.4 |
| R954 | 7030003220 | S.RES ERJ3GEYJ 150 V (15) | B | 205.6/16.7 |
| R955 | 7030003380 | S.RES ERJ3GEYJ 331 V (330) | B | 202.8/16.7 |
| R956 | 7030003320 | S.RES ERJ3GEYJ 101 V (100) | T | 8.3/65 |
| R957 | 7030003320 | S.RES ERJ3GEYJ 101 V (100) | B | 11.6/60.5 |
| R958 | 7030003280 | S.RES ERJ3GEYJ 470 V (47) | B | 189.5/19.9 |
| R959 | 7030003440 | S.RES ERJ3GEYJ 102 V (1 k) | T | 186.5/21.4 |
| R960 | 7030003530 | S.RES ERJ3GEYJ 562 V (5.6 k) | T | 191.5/20 |
| R961 | 7030003320 | S.RES ERJ3GEYJ 101 V (100) | B | 208.3/16.4 |
| R962 | 7030003320 | S.RES ERJ3GEYJ 101 V (100) | B | 187.7/16.4 |
| R963 | 7030004050 | S.RES ERJ3GEYJ 1R0 V (1) | B | 181.4/16.5 |
| | | | | |
| C1 | 4030006880 | S.CER C1608 JB 1H 472K-T | B | 183.4/92.3 |
| C2 | 4030006880 | S.CER C1608 JB 1H 472K-T | T | 185.3/91.5 |
| C3 | 4030006880 | S.CER C1608 JB 1H 472K-T | T | 184.1/99.8 |
| C4 | 4030006880 | S.CER C1608 JB 1H 472K-T | B | 183.1/73.9 |
| C5 | 4030006880 | S.CER C1608 JB 1H 472K-T | B | 182.5/66.5 |
| C6 | 4030006880 | S.CER C1608 JB 1H 472K-T | T | 183.9/73.9 |
| C7 | 4030017840 | S.CER C2012 CH 1H 222J-T | T | 182.8/86.4 |
| C8 | 4030017850 | S.CER C2012 CH 1H 272J-T | T | 182.9/84.1 |
| C9 | 4030017820 | S.CER C2012 CH 1H 122J-T | T | 182.9/82.3 |
| C10 | 4030017840 | S.CER C2012 CH 1H 222J-T | T | 182.8/77.5 |
| C21 | 4030006880 | S.CER C1608 JB 1H 472K-T | B | 165.3/112.2 |
| C22 | 4030006880 | S.CER C1608 JB 1H 472K-T | B | 162.3/112.2 |
| C23 | 4030006880 | S.CER C1608 JB 1H 472K-T | B | 166.8/110.5 |
| C24 | 4030006880 | S.CER C1608 JB 1H 472K-T | T | 163.7/81.5 |
| C25 | 4030006880 | S.CER C1608 JB 1H 472K-T | B | 171.5/76.9 |
| C26 | 4030006880 | S.CER C1608 JB 1H 472K-T | B | 168.9/77.7 |
| C27 | 4030017810 | S.CER C1608 CH 1H 102J-T | B | 162.6/104.3 |
| C28 | 4030017810 | S.CER C1608 CH 1H 102J-T | B | 162.6/102.4 |
| C29 | 4030010760 | S.CER C1608 CH 1H 331J-T | B | 168.7/98 |
| C30 | 4030007140 | S.CER C1608 CH 1H 121J-T | B | 168.7/96.1 |
| C31 | 4030007160 | S.CER C1608 CH 1H 181J-T | B | 164.1/93.9 |
| C32 | 4030007060 | S.CER C1608 CH 1H 270J-T | B | 166.1/94 |
| C33 | 4030010760 | S.CER C1608 CH 1H 331J-T | B | 168.7/93.2 |
| C34 | 4030007090 | S.CER C1608 CH 1H 470J-T | B | 168.7/90.8 |
| C35 | 4030007160 | S.CER C1608 CH 1H 181J-T | B | 164.3/89.3 |
| C36 | 4030007060 | S.CER C1608 CH 1H 270J-T | B | 164.2/91 |
| C38 | 4030010760 | S.CER C1608 CH 1H 331J-T | B | 165.6/83.4 |
| C39 | 4030007140 | S.CER C1608 CH 1H 121J-T | B | 165.6/85.5 |
| C40 | 4030017810 | S.CER C1608 CH 1H 102J-T | B | 170/74.5 |
| C41 | 4030017810 | S.CER C1608 CH 1H 102J-T | B | 170/72.7 |
| C51 | 4030006880 | S.CER C1608 JB 1H 472K-T | T | 153.8/116 |
| C52 | 4030006880 | S.CER C1608 JB 1H 472K-T | B | 150.6/112.3 |
| C53 | 4030006880 | S.CER C1608 JB 1H 472K-T | B | 153.8/116 |
| C54 | 4030006880 | S.CER C1608 JB 1H 472K-T | B | 160.3/71.9 |
| C55 | 4030006880 | S.CER C1608 JB 1H 472K-T | B | 160.2/65.2 |
| C56 | 4030006880 | S.CER C1608 JB 1H 472K-T | T | 165.1/68.5 |
| C57 | 4030017800 | S.CER C1608 CH 1H 561J-T | B | 143.6/99.3 |
| C58 | 4030010760 | S.CER C1608 CH 1H 331J-T | B | 143.6/97.2 |
| C59 | 4030010760 | S.CER C1608 CH 1H 331J-T | B | 144.2/94.6 |
| C60 | 4030007080 | S.CER C1608 CH 1H 390J-T | B | 144.2/92.2 |
| C61 | 4030007100 | S.CER C1608 CH 1H 560J-T | B | 141.8/90.2 |
| C62 | 4030010760 | S.CER C1608 CH 1H 331J-T | B | 139.5/90.2 |
| C63 | 4030010760 | S.CER C1608 CH 1H 331J-T | B | 143.8/83 |
| C64 | 4030007090 | S.CER C1608 CH 1H 470J-T | B | 143.8/85.3 |
| C65 | 4030010760 | S.CER C1608 CH 1H 331J-T | B | 141.1/82 |
| C66 | 4030007100 | S.CER C1608 CH 1H 560J-T | B | 138.9/82 |
| C67 | 4030010760 | S.CER C1608 CH 1H 331J-T | B | 143.7/78.7 |
| C68 | 4030007080 | S.CER C1608 CH 1H 390J-T | B | 143.7/81.1 |
| C69 | 4030017800 | S.CER C1608 CH 1H 561J-T | B | 144/75.1 |
| C70 | 4030010760 | S.CER C1608 CH 1H 331J-T | B | 144/77.1 |
| C81 | 4030006880 | S.CER C1608 JB 1H 472K-T | B | 139.9/115 |
| C82 | 4030006880 | S.CER C1608 JB 1H 472K-T | B | 138.1/111.8 |
| C83 | 4030006880 | S.CER C1608 JB 1H 472K-T | B | 140.7/117 |
| C84 | 4030006880 | S.CER C1608 JB 1H 472K-T | B | 138.4/72.1 |
| C85 | 4030006880 | S.CER C1608 JB 1H 472K-T | B | 144.9/66.5 |
| C86 | 4030006880 | S.CER C1608 JB 1H 472K-T | B | 143/68.1 |
| C87 | 4030017800 | S.CER C1608 CH 1H 561J-T | B | 126.7/116.6 |
| C88 | 4030011330 | S.CER C1608 CH 1H 391J-T | B | 126.7/114.8 |
| C89 | 4030007160 | S.CER C1608 CH 1H 181J-T | B | 126.8/104.3 |
| C90 | 4030007070 | S.CER C1608 CH 1H 330J-T | B | 126.8/106.2 |
| C91 | 4030007030 | S.CER C1608 CH 1H 150J-T | B | 130.7/102.1 |
| C92 | 4030007120 | S.CER C1608 CH 1H 820J-T | B | 128.9/102.1 |
| C93 | 4030007140 | S.CER C1608 CH 1H 121J-T | B | 126.6/101.3 |
| C94 | 4030007100 | S.CER C1608 CH 1H 560J-T | B | 126.6/99.6 |
| C95 | 4030007120 | S.CER C1608 CH 1H 820J-T | B | 129.4/92.5 |
| C96 | 4030007030 | S.CER C1608 CH 1H 150J-T | B | 131.4/92.5 |
| C97 | 4030007160 | S.CER C1608 CH 1H 181J-T | B | 126.7/89.6 |
| C98 | 4030007070 | S.CER C1608 CH 1H 330J-T | B | 126.7/88 |
| C99 | 4030017800 | S.CER C1608 CH 1H 561J-T | B | 126.7/86.1 |
| C100 | 4030011330 | S.CER C1608 CH 1H 391J-T | B | 126.7/84.3 |
| C111 | 4030006880 | S.CER C1608 JB 1H 472K-T | B | 118.1/115.2 |

M.=Mounted side (T: Mounted on the Top side, B: Mounted on the Bottom side)
S.=Surface mount

## [BPF UNIT]

| REF NO. | ORDER NO. | DESCRIPTION | M. | H/V LOCATION |
|---|---|---|---|---|
| C112 | 4030006880 | S.CER C1608 JB 1H 472K-T | B | 115.2/112.4 |
| C113 | 4030006880 | S.CER C1608 JB 1H 472K-T | B | 118.9/117.6 |
| C114 | 4030006880 | S.CER C1608 JB 1H 472K-T | B | 107.7/69.4 |
| C115 | 4030006880 | S.CER C1608 JB 1H 472K-T | B | 104.3/65.9 |
| C116 | 4030006880 | S.CER C1608 JB 1H 472K-T | T | 108.7/67.5 |
| C117 | 4030010760 | S.CER C1608 CH 1H 331J-T | B | 110.3/109.3 |
| C118 | 4030007150 | S.CER C1608 CH 1H 151J-T | B | 110.3/107.8 |
| C119 | 4030007150 | S.CER C1608 CH 1H 151J-T | B | 110.3/96.6 |
| C120 | 4030007060 | S.CER C1608 CH 1H 270J-T | B | 110.3/98.3 |
| C121 | 4030007060 | S.CER C1608 CH 1H 270J-T | B | 106.8/95 |
| C122 | 4030007140 | S.CER C1608 CH 1H 121J-T | B | 105.2/95 |
| C123 | 4030007150 | S.CER C1608 CH 1H 151J-T | B | 110.3/94.3 |
| C124 | 4030007010 | S.CER C1608 CH 1H 100D-T | B | 110.3/92.7 |
| C125 | 4030007140 | S.CER C1608 CH 1H 121J-T | B | 109.6/84.4 |
| C126 | 4030007060 | S.CER C1608 CH 1H 270J-T | B | 107.5/84.4 |
| C127 | 4030007150 | S.CER C1608 CH 1H 151J-T | B | 110.3/80.6 |
| C128 | 4030007060 | S.CER C1608 CH 1H 270J-T | B | 110.3/78.7 |
| C129 | 4030010760 | S.CER C1608 CH 1H 331J-T | B | 110.3/73.7 |
| C130 | 4030007150 | S.CER C1608 CH 1H 151J-T | B | 110.4/72 |
| C141 | 4030006880 | S.CER C1608 JB 1H 472K-T | B | 105.2/115.2 |
| C142 | 4030006880 | S.CER C1608 JB 1H 472K-T | B | 97.2/108.7 |
| C143 | 4030006880 | S.CER C1608 JB 1H 472K-T | B | 105.6/117.6 |
| C144 | 4030006880 | S.CER C1608 JB 1H 472K-T | B | 91/72.9 |
| C145 | 4030006880 | S.CER C1608 JB 1H 472K-T | B | 90.2/65.9 |
| C146 | 4030006880 | S.CER C1608 JB 1H 472K-T | T | 93.4/70.3 |
| C147 | 4030007170 | S.CER C1608 CH 1H 221J-T | B | 92.3/109.8 |
| C148 | 4030007170 | S.CER C1608 CH 1H 221J-T | B | 92.3/108 |
| C149 | 4030007130 | S.CER C1608 CH 1H 101J-T | B | 92.4/104.5 |
| C150 | 4030007050 | S.CER C1608 CH 1H 220J-T | B | 92.4/102.6 |
| C151 | 4030007070 | S.CER C1608 CH 1H 330J-T | B | 93.1/99.9 |
| C152 | 4030007080 | S.CER C1608 CH 1H 390J-T | B | 94.8/99.9 |
| C153 | 4030007120 | S.CER C1608 CH 1H 820J-T | B | 92.4/94.8 |
| C154 | 4030007050 | S.CER C1608 CH 1H 220J-T | B | 92.4/93.3 |
| C155 | 4030007080 | S.CER C1608 CH 1H 390J-T | B | 95.5/92.5 |
| C156 | 4030007070 | S.CER C1608 CH 1H 330J-T | B | 97.7/92.5 |
| C157 | 4030007130 | S.CER C1608 CH 1H 101J-T | B | 92.4/90.8 |
| C158 | 4030007050 | S.CER C1608 CH 1H 220J-T | B | 92.4/89.2 |
| C159 | 4030007170 | S.CER C1608 CH 1H 221J-T | B | 92.4/79.9 |
| C160 | 4030007170 | S.CER C1608 CH 1H 221J-T | B | 92.4/77.8 |
| C171 | 4030006880 | S.CER C1608 JB 1H 472K-T | B | 73.9/115.2 |
| C172 | 4030006880 | S.CER C1608 JB 1H 472K-T | B | 71.1/112.4 |
| C173 | 4030006880 | S.CER C1608 JB 1H 472K-T | B | 74.9/117.6 |
| C174 | 4030006880 | S.CER C1608 JB 1H 472K-T | B | 78.9/72.9 |
| C175 | 4030006880 | S.CER C1608 JB 1H 472K-T | B | 77.9/65.8 |
| C176 | 4030006880 | S.CER C1608 JB 1H 472K-T | B | 81.6/75.9 |
| C177 | 4030007170 | S.CER C1608 CH 1H 221J-T | B | 78.3/115.3 |
| C178 | 4030007110 | S.CER C1608 CH 1H 680J-T | B | 78.3/112.9 |
| C179 | 4030007090 | S.CER C1608 CH 1H 470J-T | B | 74.1/103.9 |
| C180 | 4030007090 | S.CER C1608 CH 1H 470J-T | B | 74.1/105.7 |
| C181 | 4030007070 | S.CER C1608 CH 1H 330J-T | B | 73.3/101.4 |
| C182 | 4030007070 | S.CER C1608 CH 1H 330J-T | B | 71.4/101.4 |
| C183 | 4030007120 | S.CER C1608 CH 1H 820J-T | B | 74.1/98.9 |
| C185 | 4030007070 | S.CER C1608 CH 1H 330J-T | B | 73.3/93.6 |
| C186 | 4030007070 | S.CER C1608 CH 1H 330J-T | B | 71.4/93.6 |
| C187 | 4030007090 | S.CER C1608 CH 1H 470J-T | B | 74.1/90.2 |
| C188 | 4030007090 | S.CER C1608 CH 1H 470J-T | B | 74.1/88.1 |
| C189 | 4030007170 | S.CER C1608 CH 1H 221J-T | B | 74.1/85.9 |
| C190 | 4030007110 | S.CER C1608 CH 1H 680J-T | B | 74.1/83.9 |
| C201 | 4030006880 | S.CER C1608 JB 1H 472K-T | B | 61.6/115.2 |
| C202 | 4030006880 | S.CER C1608 JB 1H 472K-T | B | 58.8/112.4 |
| C203 | 4030006880 | S.CER C1608 JB 1H 472K-T | B | 58.2/116.1 |
| C204 | 4030006880 | S.CER C1608 JB 1H 472K-T | B | 66.4/76.6 |
| C205 | 4030006880 | S.CER C1608 JB 1H 472K-T | B | 71.2/80.2 |
| C206 | 4030006880 | S.CER C1608 JB 1H 472K-T | B | 70.2/74.8 |
| C207 | 4030007160 | S.CER C1608 CH 1H 181J-T | B | 57.7/103.6 |
| C208 | 4030007090 | S.CER C1608 CH 1H 470J-T | B | 57.7/102 |
| C209 | 4030007090 | S.CER C1608 CH 1H 470J-T | B | 64.8/95.3 |
| C210 | 4030007040 | S.CER C1608 CH 1H 180J-T | B | 63.2/95.3 |
| C211 | 4030007030 | S.CER C1608 CH 1H 150J-T | B | 60.8/94.5 |
| C212 | 4030007050 | S.CER C1608 CH 1H 220J-T | B | 60.8/92.9 |
| C213 | 4030007090 | S.CER C1608 CH 1H 470J-T | B | 57.7/92.9 |
| C214 | 4030006990 | S.CER C1608 CH 1H 080D-T | B | 57.7/94.5 |
| C215 | 4030007050 | S.CER C1608 CH 1H 220J-T | B | 60.1/85.1 |
| C216 | 4030007030 | S.CER C1608 CH 1H 150J-T | B | 58.5/85.1 |
| C217 | 4030007090 | S.CER C1608 CH 1H 470J-T | B | 57.7/82.7 |
| C218 | 4030007040 | S.CER C1608 CH 1H 180J-T | B | 57.7/81.1 |
| C219 | 4030007160 | S.CER C1608 CH 1H 181J-T | B | 57.7/79.5 |
| C220 | 4030007090 | S.CER C1608 CH 1H 470J-T | B | 57.7/77.9 |
| C231 | 4030006880 | S.CER C1608 JB 1H 472K-T | B | 39.4/115.3 |
| C232 | 4030006880 | S.CER C1608 JB 1H 472K-T | B | 36.6/112.4 |
| C233 | 4030006880 | S.CER C1608 JB 1H 472K-T | B | 40.3/117.5 |
| C234 | 4030006880 | S.CER C1608 JB 1H 472K-T | B | 46.2/73.5 |
| C235 | 4030006880 | S.CER C1608 JB 1H 472K-T | B | 49/69.2 |
| C236 | 4030006880 | S.CER C1608 JB 1H 472K-T | B | 50.4/69.1 |
| C237 | 4030007140 | S.CER C1608 CH 1H 121J-T | B | 41.2/109.8 |
| C238 | 4030007040 | S.CER C1608 CH 1H 180J-T | B | 41.2/108.2 |
| C239 | 4030007070 | S.CER C1608 CH 1H 330J-T | B | 41.2/103.8 |
| C240 | 4030007040 | S.CER C1608 CH 1H 180J-T | B | 41.2/102.2 |
| C241 | 4030007010 | S.CER C1608 CH 1H 100D-T | B | 40.5/99.8 |
| C242 | 4030007070 | S.CER C1608 CH 1H 330J-T | B | 38.9/99.8 |
| C243 | 4030007090 | S.CER C1608 CH 1H 470J-T | B | 41.2/94.8 |
| C245 | 4030007070 | S.CER C1608 CH 1H 330J-T | B | 40.5/91.3 |

## [BPF UNIT]

| REF NO. | ORDER NO. | DESCRIPTION | M. | H/V LOCATION |
|---|---|---|---|---|
| C246 | 4030007010 | S.CER C1608 CH 1H 100D-T | B | 38.9/91.3 |
| C247 | 4030007070 | S.CER C1608 CH 1H 330J-T | B | 41.2/88.9 |
| C248 | 4030007040 | S.CER C1608 CH 1H 180J-T | B | 41.2/87.3 |
| C249 | 4030007140 | S.CER C1608 CH 1H 121J-T | B | 41.2/85.7 |
| C250 | 4030007040 | S.CER C1608 CH 1H 180J-T | B | 41.2/84.1 |
| C261 | 4030006880 | S.CER C1608 JB 1H 472K-T | B | 27/115.2 |
| C262 | 4030006880 | S.CER C1608 JB 1H 472K-T | B | 24.3/112.4 |
| C263 | 4030006880 | S.CER C1608 JB 1H 472K-T | B | 29.7/111.6 |
| C264 | 4030006880 | S.CER C1608 JB 1H 472K-T | T | 36.5/70.9 |
| C265 | 4030006880 | S.CER C1608 JB 1H 472K-T | T | 36.6/67.9 |
| C266 | 4030006880 | S.CER C1608 JB 1H 472K-T | B | 36.7/70 |
| C267 | 4030007130 | S.CER C1608 CH 1H 101J-T | B | 23.2/103.5 |
| C268 | 4030007030 | S.CER C1608 CH 1H 150J-T | B | 23.2/101.9 |
| C269 | 4030007050 | S.CER C1608 CH 1H 220J-T | B | 30.3/95.3 |
| C270 | 4030007020 | S.CER C1608 CH 1H 120J-T | B | 28.7/95.3 |
| C271 | 4030007050 | S.CER C1608 CH 1H 220J-T | B | 26.3/94.5 |
| C273 | 4030007050 | S.CER C1608 CH 1H 220J-T | B | 23.2/94.5 |
| C274 | 4030006980 | S.CER C1608 CH 1H 070D-T | B | 23.2/92.9 |
| C275 | 4030007050 | S.CER C1608 CH 1H 220J-T | B | 24/85.1 |
| C277 | 4030007050 | S.CER C1608 CH 1H 220J-T | B | 23.2/81.1 |
| C278 | 4030007020 | S.CER C1608 CH 1H 120J-T | B | 23.2/82.7 |
| C279 | 4030007130 | S.CER C1608 CH 1H 101J-T | B | 23.3/73.6 |
| C280 | 4030007030 | S.CER C1608 CH 1H 150J-T | B | 23.3/77.9 |
| C291 | 4030006880 | S.CER C1608 JB 1H 472K-T | B | 218.9/73.3 |
| C292 | 4030006880 | S.CER C1608 JB 1H 472K-T | B | 214.4/77.4 |
| C293 | 4030006880 | S.CER C1608 JB 1H 472K-T | B | 222.7/76.6 |
| C294 | 4030006880 | S.CER C1608 JB 1H 472K-T | B | 209.7/73 |
| C295 | 4030006880 | S.CER C1608 JB 1H 472K-T | B | 207.6/77.5 |
| C296 | 4030006880 | S.CER C1608 JB 1H 472K-T | B | 203.9/73.5 |
| C297 | 4030007150 | S.CER C1608 CH 1H 151J-T | T | 213/79.9 |
| C302 | 4030007030 | S.CER C1608 CH 1H 150J-T | T | 210.2/82.7 |
| C303 | 4030007130 | S.CER C1608 CH 1H 101J-T | T | 211.7/79.9 |
| C304 | 4030007040 | S.CER C1608 CH 1H 180J-T | T | 208.4/79.9 |
| C321 | 4030006880 | S.CER C1608 JB 1H 472K-T | T | 218.8/97.4 |
| C322 | 4030006880 | S.CER C1608 JB 1H 472K-T | T | 218.8/98.7 |
| C323 | 4030006880 | S.CER C1608 JB 1H 472K-T | B | 213/91 |
| C324 | 4030006880 | S.CER C1608 JB 1H 472K-T | B | 209.3/90.7 |
| C325 | 4030006880 | S.CER C1608 JB 1H 472K-T | T | 206.6/98.8 |
| C326 | 4030006880 | S.CER C1608 JB 1H 472K-T | T | 204/98.8 |
| C327 | 4030007100 | S.CER C1608 CH 1H 560J-T | T | 210.7/90.3 |
| C329 | 4030007110 | S.CER C1608 CH 1H 680J-T | T | 208.1/90.3 |
| C331 | 4030007100 | S.CER C1608 CH 1H 560J-T | T | 208.8/96.6 |
| C353 | 4030006880 | S.CER C1608 JB 1H 472K-T | B | 189.1/91.2 |
| C354 | 4030006880 | S.CER C1608 JB 1H 472K-T | B | 189.5/94.6 |
| C355 | 4030006880 | S.CER C1608 JB 1H 472K-T | T | 189/92.4 |
| C356 | 4030006880 | S.CER C1608 JB 1H 472K-T | B | 189.5/86.4 |
| C357 | 4030006880 | S.CER C1608 JB 1H 472K-T | T | 189/86.1 |
| C358 | 4030006880 | S.CER C1608 JB 1H 472K-T | B | 189.1/89.1 |
| C359 | 4030006880 | S.CER C1608 JB 1H 472K-T | T | 189/79.9 |
| C360 | 4030006880 | S.CER C1608 JB 1H 472K-T | B | 189.5/80.2 |
| C361 | 4030006880 | S.CER C1608 JB 1H 472K-T | B | 189.5/83 |
| C362 | 4030006880 | S.CER C1608 JB 1H 472K-T | T | 189/73.7 |
| C363 | 4030006880 | S.CER C1608 JB 1H 472K-T | B | 189.5/74 |
| C364 | 4030006880 | S.CER C1608 JB 1H 472K-T | B | 189.5/76.8 |
| C365 | 4030006880 | S.CER C1608 JB 1H 472K-T | T | 194/68.8 |
| C371 | 4030006880 | S.CER C1608 JB 1H 472K-T | T | 215.9/69.9 |
| C388 | 4030006880 | S.CER C1608 JB 1H 472K-T | B | 239.8/114.3 |
| C389 | 4030010210 | S.CER C3216 JB 1C 105M-T | B | 247.3/111.1 |
| C390 | 4030011600 | S.CER C1608 JB 1E 104K-T | T | 226.2/49.8 |
| C391 | 4030011600 | S.CER C1608 JB 1E 104K-T | B | 237.5/53.2 |
| C392 | 4030011600 | S.CER C1608 JB 1E 104K-T | T | 228.9/62.5 |
| C393 | 4030008860 | S.CER C1608 JB 1H 153K-T | B | 233.2/45.5 |
| C394 | 4030010210 | S.CER C3216 JB 1C 105M-T | B | 235.1/59.6 |
| C395 | 4030008860 | S.CER C1608 JB 1H 153K-T | B | 233.2/40 |
| C396 | 4030011600 | S.CER C1608 JB 1E 104K-T | B | 235.5/43.8 |
| C397 | 4550006470 | S.TAN TEESVB2 1D 106M8R | B | 227/44 |
| C398 | 4030011600 | S.CER C1608 JB 1E 104K-T | T | 5.4/102.8 |
| C399 | 4030011600 | S.CER C1608 JB 1E 104K-T | T | 5.3/77.8 |
| C401 | 4030006880 | S.CER C1608 JB 1H 472K-T | B | 223.9/95.5 |
| C402 | 4030010210 | S.CER C3216 JB 1C 105M-T | B | 234/107.1 |
| C403 | 4030009520 | S.CER C1608 CH 1H 020B-T | B | 233.9/109.3 |
| C404 | 4030007050 | S.CER C1608 CH 1H 220J-T | B | 233.9/110.9 |
| C405 | 4030010760 | S.CER C1608 CH 1H 331J-T | B | 236.1/113.4 |
| C498 | 4030011600 | S.CER C1608 JB 1E 104K-T | T | 5.3/60.4 |
| C499 | 4030011600 | S.CER C1608 JB 1E 104K-T | T | 6.1/39.7 |
| C501 | 4030006880 | S.CER C1608 JB 1H 472K-T | B | 184.9/22 |
| C502 | 4030006880 | S.CER C1608 JB 1H 472K-T | B | 181.6/22 |
| C503 | 4030006880 | S.CER C1608 JB 1H 472K-T | B | 183.9/31.7 |
| C504 | 4030006880 | S.CER C1608 JB 1H 472K-T | B | 183.7/54.7 |
| C505 | 4030006880 | S.CER C1608 JB 1H 472K-T | T | 185.3/47.1 |
| C506 | 4030006880 | S.CER C1608 JB 1H 472K-T | B | 184.1/47.2 |
| C507 | 4030017840 | S.CER C2012 CH 1H 222J-T | T | 183/35.4 |
| C508 | 4030017850 | S.CER C2012 CH 1H 272J-T | T | 182.9/37.7 |
| C509 | 4030017820 | S.CER C2012 CH 1H 122J-T | T | 182.9/39.5 |
| C510 | 4030017840 | S.CER C2012 CH 1H 222J-T | T | 182.9/44.3 |
| C531 | 4030006880 | S.CER C1608 JB 1H 472K-T | B | 165.7/5.6 |
| C532 | 4030006880 | S.CER C1608 JB 1H 472K-T | B | 165.2/2.3 |
| C533 | 4030006880 | S.CER C1608 JB 1H 472K-T | B | 164.5/9 |
| C534 | 4030006880 | S.CER C1608 JB 1H 472K-T | B | 164/54.6 |
| C535 | 4030006880 | S.CER C1608 JB 1H 472K-T | B | 167.7/49.6 |
| C536 | 4030006880 | S.CER C1608 JB 1H 472K-T | B | 169.4/53.7 |
| C537 | 4030017810 | S.CER C1608 CH 1H 102J-T | B | 168.6/20.1 |

M.=Mounted side (T: Mounted on the Top side, B: Mounted on the Bottom side)
S.=Surface mount

## [BPF UNIT]

| REF NO. | ORDER NO. | DESCRIPTION | M. | H/V LOCATION |
|---|---|---|---|---|
| C538 | 4030017810 | S.CER C1608 CH 1H 102J-T | B | 168.6/21.9 |
| C539 | 4030010760 | S.CER C1608 CH 1H 331J-T | B | 168.3/24.5 |
| C540 | 4030007140 | S.CER C1608 CH 1H 121J-T | B | 168.3/26.7 |
| C541 | 4030007160 | S.CER C1608 CH 1H 181J-T | B | 165.3/27.6 |
| C542 | 4030007060 | S.CER C1608 CH 1H 270J-T | B | 162.5/27.7 |
| C543 | 4030010760 | S.CER C1608 CH 1H 331J-T | B | 168.3/28.8 |
| C544 | 4030007090 | S.CER C1608 CH 1H 470J-T | B | 168.3/30.6 |
| C545 | 4030007160 | S.CER C1608 CH 1H 181J-T | B | 162.9/34.2 |
| C546 | 4030007060 | S.CER C1608 CH 1H 270J-T | B | 164.9/34.1 |
| C547 | 4030010760 | S.CER C1608 CH 1H 331J-T | B | 168.1/35.1 |
| C548 | 4030007140 | S.CER C1608 CH 1H 121J-T | B | 168.1/36.7 |
| C549 | 4030017810 | S.CER C1608 CH 1H 102J-T | B | 170.3/43.4 |
| C550 | 4030017810 | S.CER C1608 CH 1H 102J-T | B | 170.3/45.9 |
| C561 | 4030006880 | S.CER C1608 JB 1H 472K-T | B | 153/8 |
| C562 | 4030006880 | S.CER C1608 JB 1H 472K-T | B | 153/11.9 |
| C563 | 4030006880 | S.CER C1608 JB 1H 472K-T | B | 152/10 |
| C564 | 4030006880 | S.CER C1608 JB 1H 472K-T | T | 161.4/46.3 |
| C565 | 4030006880 | S.CER C1608 JB 1H 472K-T | B | 162.2/38.8 |
| C566 | 4030006880 | S.CER C1608 JB 1H 472K-T | T | 165.5/42.4 |
| C567 | 4030017800 | S.CER C1608 CH 1H 561J-T | B | 147.9/17.4 |
| C568 | 4030010760 | S.CER C1608 CH 1H 331J-T | B | 148.5/15.2 |
| C569 | 4030010760 | S.CER C1608 CH 1H 331J-T | B | 144.6/25.7 |
| C570 | 4030007080 | S.CER C1608 CH 1H 390J-T | B | 144.6/27.4 |
| C571 | 4030007100 | S.CER C1608 CH 1H 560J-T | B | 141.6/28.1 |
| C572 | 4030010760 | S.CER C1608 CH 1H 331J-T | B | 139.8/28.1 |
| C573 | 4030010760 | S.CER C1608 CH 1H 331J-T | B | 144.3/34.2 |
| C574 | 4030007090 | S.CER C1608 CH 1H 470J-T | B | 144.3/35.7 |
| C575 | 4030010760 | S.CER C1608 CH 1H 331J-T | B | 141.5/38.6 |
| C576 | 4030007100 | S.CER C1608 CH 1H 560J-T | B | 139.8/38.6 |
| C577 | 4030010760 | S.CER C1608 CH 1H 331J-T | B | 144.3/43.2 |
| C578 | 4030007080 | S.CER C1608 CH 1H 390J-T | B | 144.3/40.9 |
| C579 | 4030017800 | S.CER C1608 CH 1H 561J-T | B | 149.7/45.2 |
| C580 | 4030010760 | S.CER C1608 CH 1H 331J-T | B | 147.9/45.2 |
| C591 | 4030006880 | S.CER C1608 JB 1H 472K-T | B | 140.2/5.1 |
| C592 | 4030006880 | S.CER C1608 JB 1H 472K-T | B | 142.2/5.1 |
| C593 | 4030006880 | S.CER C1608 JB 1H 472K-T | B | 133/8.5 |
| C594 | 4030006880 | S.CER C1608 JB 1H 472K-T | B | 140.4/54.3 |
| C595 | 4030006880 | S.CER C1608 JB 1H 472K-T | B | 148.6/52.7 |
| C596 | 4030006880 | S.CER C1608 JB 1H 472K-T | B | 146/53.4 |
| C597 | 4030017800 | S.CER C1608 CH 1H 561J-T | B | 126.7/3.2 |
| C598 | 4030011330 | S.CER C1608 CH 1H 391J-T | B | 126.7/5.4 |
| C599 | 4030007160 | S.CER C1608 CH 1H 181J-T | B | 126.7/15.1 |
| C600 | 4030007070 | S.CER C1608 CH 1H 330J-T | B | 126.7/17.3 |
| C601 | 4030007030 | S.CER C1608 CH 1H 150J-T | B | 129.6/18.2 |
| C602 | 4030007120 | S.CER C1608 CH 1H 820J-T | B | 131.6/18.2 |
| C603 | 4030007140 | S.CER C1608 CH 1H 121J-T | B | 126.8/20.5 |
| C604 | 4030007100 | S.CER C1608 CH 1H 560J-T | B | 126.8/18.9 |
| C605 | 4030007120 | S.CER C1608 CH 1H 820J-T | B | 131.4/26.8 |
| C606 | 4030007030 | S.CER C1608 CH 1H 150J-T | B | 129.6/26.8 |
| C607 | 4030007160 | S.CER C1608 CH 1H 181J-T | B | 127.3/29 |
| C608 | 4030007070 | S.CER C1608 CH 1H 330J-T | B | 127.3/31.3 |
| C609 | 4030017800 | S.CER C1608 CH 1H 561J-T | B | 127.3/33.3 |
| C610 | 4030011330 | S.CER C1608 CH 1H 391J-T | B | 127.3/35.5 |
| C621 | 4030006880 | S.CER C1608 JB 1H 472K-T | B | 118.5/4.7 |
| C622 | 4030006880 | S.CER C1608 JB 1H 472K-T | B | 121.2/4 |
| C623 | 4030006880 | S.CER C1608 JB 1H 472K-T | B | 113.8/8.2 |
| C624 | 4030006880 | S.CER C1608 JB 1H 472K-T | T | 110.3/54.1 |
| C625 | 4030006880 | S.CER C1608 JB 1H 472K-T | B | 107.4/51.4 |
| C626 | 4030006880 | S.CER C1608 JB 1H 472K-T | T | 109/52.6 |
| C627 | 4030010760 | S.CER C1608 CH 1H 331J-T | B | 109.3/17.8 |
| C628 | 4030007150 | S.CER C1608 CH 1H 151J-T | B | 109.3/19.7 |
| C629 | 4030007150 | S.CER C1608 CH 1H 151J-T | B | 109.2/21.7 |
| C630 | 4030007060 | S.CER C1608 CH 1H 270J-T | B | 109.2/23.6 |
| C631 | 4030007060 | S.CER C1608 CH 1H 270J-T | B | 105.2/25.8 |
| C632 | 4030007140 | S.CER C1608 CH 1H 121J-T | B | 106.9/25.8 |
| C633 | 4030007150 | S.CER C1608 CH 1H 151J-T | B | 109.3/33.9 |
| C634 | 4030007010 | S.CER C1608 CH 1H 100D-T | B | 109.3/31.7 |
| C635 | 4030007140 | S.CER C1608 CH 1H 121J-T | B | 108.5/37.9 |
| C636 | 4030007060 | S.CER C1608 CH 1H 270J-T | B | 105.9/37.9 |
| C637 | 4030007150 | S.CER C1608 CH 1H 151J-T | B | 109.3/40.4 |
| C638 | 4030007060 | S.CER C1608 CH 1H 270J-T | B | 109.3/42.2 |
| C639 | 4030010760 | S.CER C1608 CH 1H 331J-T | B | 110.2/46.5 |
| C640 | 4030007150 | S.CER C1608 CH 1H 151J-T | B | 110.2/48.5 |
| C651 | 4030006880 | S.CER C1608 JB 1H 472K-T | B | 105.1/7.8 |
| C652 | 4030006880 | S.CER C1608 JB 1H 472K-T | B | 105.1/4.1 |
| C653 | 4030006880 | S.CER C1608 JB 1H 472K-T | B | 103/10.2 |
| C654 | 4030006880 | S.CER C1608 JB 1H 472K-T | T | 90.4/54.2 |
| C655 | 4030006880 | S.CER C1608 JB 1H 472K-T | B | 92.1/46.9 |
| C656 | 4030006880 | S.CER C1608 JB 1H 472K-T | T | 93.5/49.6 |
| C657 | 4030007170 | S.CER C1608 CH 1H 221J-T | B | 92.2/6 |
| C658 | 4030007170 | S.CER C1608 CH 1H 221J-T | B | 92.2/4.4 |
| C659 | 4030007130 | S.CER C1608 CH 1H 101J-T | B | 92.5/14.8 |
| C660 | 4030007050 | S.CER C1608 CH 1H 220J-T | B | 92.5/17 |
| C661 | 4030007070 | S.CER C1608 CH 1H 330J-T | B | 95.2/19.6 |
| C662 | 4030007080 | S.CER C1608 CH 1H 390J-T | B | 93.2/19.6 |
| C663 | 4030007120 | S.CER C1608 CH 1H 820J-T | B | 92.6/27.6 |
| C664 | 4030007050 | S.CER C1608 CH 1H 220J-T | B | 92.6/25.4 |
| C665 | 4030007080 | S.CER C1608 CH 1H 390J-T | B | 95.7/28.3 |
| C666 | 4030007070 | S.CER C1608 CH 1H 330J-T | B | 97.5/28.3 |
| C667 | 4030007130 | S.CER C1608 CH 1H 101J-T | B | 92.2/29.9 |
| C668 | 4030007050 | S.CER C1608 CH 1H 220J-T | B | 92.2/31.8 |
| C669 | 4030007170 | S.CER C1608 CH 1H 221J-T | B | 92.2/33.5 |

## [BPF UNIT]

| REF NO. | ORDER NO. | DESCRIPTION | M. | H/V LOCATION |
|---|---|---|---|---|
| C670 | 4030007170 | S.CER C1608 CH 1H 221J-T | B | 92.2/35.6 |
| C681 | 4030006880 | S.CER C1608 JB 1H 472K-T | B | 74.4/5.1 |
| C682 | 4030006880 | S.CER C1608 JB 1H 472K-T | B | 77.1/3.1 |
| C683 | 4030006880 | S.CER C1608 JB 1H 472K-T | B | 71.5/8.1 |
| C684 | 4030006880 | S.CER C1608 JB 1H 472K-T | T | 78.9/54.1 |
| C685 | 4030006880 | S.CER C1608 JB 1H 472K-T | B | 79.1/46.9 |
| C686 | 4030006880 | S.CER C1608 JB 1H 472K-T | B | 81.6/44 |
| C687 | 4030007170 | S.CER C1608 CH 1H 221J-T | B | 75.5/11 |
| C688 | 4030007110 | S.CER C1608 CH 1H 680J-T | B | 75.5/13.4 |
| C689 | 4030007090 | S.CER C1608 CH 1H 470J-T | B | 70.8/15.2 |
| C690 | 4030007090 | S.CER C1608 CH 1H 470J-T | B | 73/15.2 |
| C691 | 4030007070 | S.CER C1608 CH 1H 330J-T | B | 71/18.7 |
| C692 | 4030007070 | S.CER C1608 CH 1H 330J-T | B | 73/18.7 |
| C693 | 4030007120 | S.CER C1608 CH 1H 820J-T | B | 75.7/21.1 |
| C695 | 4030007070 | S.CER C1608 CH 1H 330J-T | B | 72.6/27 |
| C696 | 4030007070 | S.CER C1608 CH 1H 330J-T | B | 70.9/27 |
| C697 | 4030007090 | S.CER C1608 CH 1H 470J-T | B | 75.6/29.6 |
| C698 | 4030007090 | S.CER C1608 CH 1H 470J-T | B | 75.6/31.7 |
| C699 | 4030007170 | S.CER C1608 CH 1H 221J-T | B | 75.6/35.8 |
| C700 | 4030007110 | S.CER C1608 CH 1H 680J-T | B | 75.6/33.9 |
| C711 | 4030006880 | S.CER C1608 JB 1H 472K-T | B | 62/5.2 |
| C712 | 4030006880 | S.CER C1608 JB 1H 472K-T | B | 63/7.9 |
| C713 | 4030006880 | S.CER C1608 JB 1H 472K-T | B | 58.6/8.3 |
| C714 | 4030006880 | S.CER C1608 JB 1H 472K-T | T | 68.2/54.2 |
| C715 | 4030006880 | S.CER C1608 JB 1H 472K-T | B | 68.4/42.7 |
| C716 | 4030006880 | S.CER C1608 JB 1H 472K-T | B | 70/46.3 |
| C717 | 4030007160 | S.CER C1608 CH 1H 181J-T | B | 57.7/20.1 |
| C718 | 4030007090 | S.CER C1608 CH 1H 470J-T | B | 57.7/17.6 |
| C719 | 4030007090 | S.CER C1608 CH 1H 470J-T | B | 57.4/23.2 |
| C720 | 4030007040 | S.CER C1608 CH 1H 180J-T | B | 57.4/25.2 |
| C721 | 4030007030 | S.CER C1608 CH 1H 150J-T | B | 61/27 |
| C722 | 4030007050 | S.CER C1608 CH 1H 220J-T | B | 63.2/27 |
| C723 | 4030007090 | S.CER C1608 CH 1H 470J-T | B | 57.7/33.7 |
| C724 | 4030006990 | S.CER C1608 CH 1H 080D-T | B | 57.7/31.6 |
| C725 | 4030007050 | S.CER C1608 CH 1H 220J-T | B | 63.3/37.6 |
| C726 | 4030007030 | S.CER C1608 CH 1H 150J-T | B | 61.3/37.6 |
| C727 | 4030007090 | S.CER C1608 CH 1H 470J-T | B | 57.7/38.3 |
| C728 | 4030007040 | S.CER C1608 CH 1H 180J-T | B | 57.7/40.6 |
| C729 | 4030007160 | S.CER C1608 CH 1H 181J-T | B | 57.7/46.2 |
| C730 | 4030007090 | S.CER C1608 CH 1H 470J-T | B | 57.7/48.6 |
| C741 | 4030006880 | S.CER C1608 JB 1H 472K-T | B | 40.8/5.4 |
| C742 | 4030006880 | S.CER C1608 JB 1H 472K-T | B | 42.7/3.4 |
| C743 | 4030006880 | S.CER C1608 JB 1H 472K-T | B | 37/8 |
| C744 | 4030006880 | S.CER C1608 JB 1H 472K-T | T | 46.2/54.2 |
| C745 | 4030006880 | S.CER C1608 JB 1H 472K-T | T | 46.2/46.6 |
| C746 | 4030006880 | S.CER C1608 JB 1H 472K-T | B | 49.5/50.4 |
| C747 | 4030007140 | S.CER C1608 CH 1H 121J-T | B | 41.2/13.3 |
| C748 | 4030007040 | S.CER C1608 CH 1H 180J-T | B | 41.2/10.8 |
| C749 | 4030007070 | S.CER C1608 CH 1H 330J-T | B | 41/18.4 |
| C750 | 4030007040 | S.CER C1608 CH 1H 180J-T | B | 41/16.4 |
| C751 | 4030007010 | S.CER C1608 CH 1H 100D-T | B | 35.3/17.1 |
| C752 | 4030007070 | S.CER C1608 CH 1H 330J-T | B | 37.5/17.1 |
| C753 | 4030007090 | S.CER C1608 CH 1H 470J-T | B | 41/20.3 |
| C755 | 4030007070 | S.CER C1608 CH 1H 330J-T | B | 35.4/25.5 |
| C756 | 4030007010 | S.CER C1608 CH 1H 100D-T | B | 37.5/25.5 |
| C757 | 4030007070 | S.CER C1608 CH 1H 330J-T | B | 41/27.5 |
| C758 | 4030007040 | S.CER C1608 CH 1H 180J-T | B | 41.1/29.4 |
| C759 | 4030007140 | S.CER C1608 CH 1H 121J-T | B | 41.2/32.6 |
| C760 | 4030007040 | S.CER C1608 CH 1H 180J-T | B | 41.2/34.9 |
| C771 | 4030006880 | S.CER C1608 JB 1H 472K-T | B | 27.6/5.5 |
| C772 | 4030006880 | S.CER C1608 JB 1H 472K-T | B | 29.2/8.5 |
| C773 | 4030006880 | S.CER C1608 JB 1H 472K-T | B | 23.5/8.2 |
| C774 | 4030006880 | S.CER C1608 JB 1H 472K-T | T | 35.9/54.4 |
| C775 | 4030006880 | S.CER C1608 JB 1H 472K-T | B | 34.2/44.5 |
| C776 | 4030006880 | S.CER C1608 JB 1H 472K-T | B | 36.4/46.1 |
| C777 | 4030007130 | S.CER C1608 CH 1H 101J-T | B | 24.1/20 |
| C778 | 4030007030 | S.CER C1608 CH 1H 150J-T | B | 24.1/17.9 |
| C779 | 4030007050 | S.CER C1608 CH 1H 220J-T | B | 24/23.6 |
| C780 | 4030007020 | S.CER C1608 CH 1H 120J-T | B | 23.9/25.6 |
| C781 | 4030007050 | S.CER C1608 CH 1H 220J-T | B | 27.5/26.4 |
| C783 | 4030007050 | S.CER C1608 CH 1H 220J-T | B | 24.2/32.3 |
| C784 | 4030006980 | S.CER C1608 CH 1H 070D-T | B | 24.2/34.3 |
| C785 | 4030007050 | S.CER C1608 CH 1H 220J-T | B | 27.8/37.7 |
| C787 | 4030007050 | S.CER C1608 CH 1H 220J-T | B | 24.5/38.5 |
| C788 | 4030007020 | S.CER C1608 CH 1H 120J-T | B | 24.5/40.7 |
| C789 | 4030007130 | S.CER C1608 CH 1H 101J-T | B | 24/46.8 |
| C790 | 4030007030 | S.CER C1608 CH 1H 150J-T | B | 24.1/49.1 |
| C801 | 4030006880 | S.CER C1608 JB 1H 472K-T | B | 218.8/46.3 |
| C802 | 4030006880 | S.CER C1608 JB 1H 472K-T | B | 223/44.4 |
| C803 | 4030006880 | S.CER C1608 JB 1H 472K-T | B | 211.6/44.7 |
| C804 | 4030006880 | S.CER C1608 JB 1H 472K-T | B | 208.8/27.5 |
| C805 | 4030006880 | S.CER C1608 JB 1H 472K-T | B | 208.3/43.7 |
| C806 | 4030006880 | S.CER C1608 JB 1H 472K-T | B | 203.8/46.1 |
| C813 | 4030007150 | S.CER C1608 CH 1H 151J-T | T | 212.6/41.2 |
| C816 | 4030007030 | S.CER C1608 CH 1H 150J-T | T | 213.7/39.1 |
| C820 | 4030007130 | S.CER C1608 CH 1H 101J-T | T | 211.3/39.8 |
| C821 | 4030007040 | S.CER C1608 CH 1H 180J-T | T | 208/39.8 |
| C831 | 4030006880 | S.CER C1608 JB 1H 472K-T | T | 218.9/22.1 |
| C832 | 4030006880 | S.CER C1608 JB 1H 472K-T | T | 218.9/20.8 |
| C833 | 4030006880 | S.CER C1608 JB 1H 472K-T | B | 214.5/27.5 |
| C834 | 4030006880 | S.CER C1608 JB 1H 472K-T | B | 209.8/46.9 |
| C835 | 4030006880 | S.CER C1608 JB 1H 472K-T | T | 201/20.7 |

M.=Mounted side (T: Mounted on the Top side, B: Mounted on the Bottom side)
S.=Surface mount

## [BPF UNIT]

| REF NO. | ORDER NO. | DESCRIPTION | M. | H/V LOCATION |
|---|---|---|---|---|
| C836 | 4030006880 | S.CER C1608 JB 1H 472K-T | T | 203.7/20.7 |
| C837 | 4030007100 | S.CER C1608 CH 1H 560J-T | T | 212/30 |
| C839 | 4030007110 | S.CER C1608 CH 1H 680J-T | T | 207.9/30 |
| C841 | 4030007100 | S.CER C1608 CH 1H 560J-T | T | 208.7/25.1 |
| C853 | 4030006880 | S.CER C1608 JB 1H 472K-T | B | 188.8/25.1 |
| C854 | 4030006880 | S.CER C1608 JB 1H 472K-T | B | 189.5/27.6 |
| C855 | 4030006880 | S.CER C1608 JB 1H 472K-T | T | 189/25.3 |
| C856 | 4030006880 | S.CER C1608 JB 1H 472K-T | B | 189.5/30.5 |
| C857 | 4030006880 | S.CER C1608 JB 1H 472K-T | T | 189/30.5 |
| C858 | 4030006880 | S.CER C1608 JB 1H 472K-T | B | 189.5/33.8 |
| C859 | 4030006880 | S.CER C1608 JB 1H 472K-T | T | 189/36.7 |
| C860 | 4030006880 | S.CER C1608 JB 1H 472K-T | B | 189.5/37.2 |
| C861 | 4030006880 | S.CER C1608 JB 1H 472K-T | B | 189.5/40 |
| C862 | 4030006880 | S.CER C1608 JB 1H 472K-T | T | 189/42.9 |
| C863 | 4030006880 | S.CER C1608 JB 1H 472K-T | B | 189.5/42.9 |
| C864 | 4030006880 | S.CER C1608 JB 1H 472K-T | B | 189.5/45.8 |
| C865 | 4030006880 | S.CER C1608 JB 1H 472K-T | T | 194/50.2 |
| C876 | 4030006880 | S.CER C1608 JB 1H 472K-T | B | 241.3/19.5 |
| C878 | 4030010760 | S.CER C1608 CH 1H 331J-T | B | 245.1/17.9 |
| C879 | 4030007050 | S.CER C1608 CH 1H 220J-T | B | 245.1/19.5 |
| C880 | 4030009520 | S.CER C1608 CH 1H 020B-T | B | 247.9/19.5 |
| C881 | 4030010210 | S.CER C3216 JB 1C 105M-T | B | 244/34 |
| C900 | 4030006880 | S.CER C1608 JB 1H 472K-T | B | 215.5/99.5 |
| C901 | 4030005110 | S.CER C2012 JB 1E 473K-T | T | 15.1/26.8 |
| C902 | 4510008520 | S.ELE EEE1CA470SP | T | 12.3/21.7 |
| C903 | 4030005110 | S.CER C2012 JB 1E 473K-T | B | 12.3/12.9 |
| C904 | 4510009150 | S.ELE EEE1EA470WP | T | 12.3/13.4 |
| C905 | 4030006880 | S.CER C1608 JB 1H 472K-T | B | 244.7/94 |
| C906 | 4030006880 | S.CER C1608 JB 1H 472K-T | B | 244.7/91.2 |
| C907 | 4030006900 | S.CER C1608 JB 1H 103K-T | B | 213.8/106.2 |
| C908 | 4030011600 | S.CER C1608 JB 1E 104K-T | B | 212.8/115.6 |
| C909 | 4030006880 | S.CER C1608 JB 1H 472K-T | B | 218.7/113.5 |
| C910 | 4030006900 | S.CER C1608 JB 1H 103K-T | B | 215.5/117.9 |
| C911 | 4030006900 | S.CER C1608 JB 1H 103K-T | B | 210.6/106.3 |
| C912 | 4030006880 | S.CER C1608 JB 1H 472K-T | B | 201.9/99.6 |
| C914 | 4030006880 | S.CER C1608 JB 1H 472K-T | B | 194.7/99.4 |
| C915 | 4030006900 | S.CER C1608 JB 1H 103K-T | B | 192.6/110.6 |
| C916 | 4030006880 | S.CER C1608 JB 1H 472K-T | T | 200.3/118.3 |
| C917 | 4030006900 | S.CER C1608 JB 1H 103K-T | T | 197.8/117.6 |
| C918 | 4030006900 | S.CER C1608 JB 1H 103K-T | B | 187.3/106.3 |
| C919 | 4030006880 | S.CER C1608 JB 1H 472K-T | B | 180/99.9 |
| C921 | 4030006880 | S.CER C1608 JB 1H 472K-T | T | 201.6/118.3 |
| C922 | 4030011600 | S.CER C1608 JB 1E 104K-T | T | 208.5/117.4 |
| C923 | 4030011600 | S.CER C1608 JB 1E 104K-T | T | 212.3/117.4 |
| C924 | 4030011600 | S.CER C1608 JB 1E 104K-T | B | 192.9/116.4 |
| C925 | 4030011600 | S.CER C1608 JB 1E 104K-T | T | 187.7/117.4 |
| C926 | 4030011600 | S.CER C1608 JB 1E 104K-T | T | 191.6/117.5 |
| C927 | 4030006960 | S.CER C1608 CH 1H 050C-T | B | 209.4/113.7 |
| C928 | 4030006960 | S.CER C1608 CH 1H 050C-T | B | 187.5/114.2 |
| C950 | 4030006880 | S.CER C1608 JB 1H 472K-T | B | 206.3/4.6 |
| C951 | 4030006900 | S.CER C1608 JB 1H 103K-T | B | 215.7/17.8 |
| C952 | 4030011600 | S.CER C1608 JB 1E 104K-T | B | 211.9/20 |
| C953 | 4030006880 | S.CER C1608 JB 1H 472K-T | B | 205.3/2.8 |
| C954 | 4030006900 | S.CER C1608 JB 1H 103K-T | B | 218.6/2.5 |
| C955 | 4030006900 | S.CER C1608 JB 1H 103K-T | B | 208.6/11.4 |
| C956 | 4030006880 | S.CER C1608 JB 1H 472K-T | T | 203.5/2.3 |
| C958 | 4030006880 | S.CER C1608 JB 1H 472K-T | B | 190/4.9 |
| C959 | 4030006900 | S.CER C1608 JB 1H 103K-T | B | 195.2/16.5 |
| C960 | 4030006880 | S.CER C1608 JB 1H 472K-T | B | 196.3/2.3 |
| C961 | 4030006900 | S.CER C1608 JB 1H 103K-T | B | 202.2/4 |
| C962 | 4030006900 | S.CER C1608 JB 1H 103K-T | B | 184/16.5 |
| C963 | 4030006880 | S.CER C1608 JB 1H 472K-T | B | 181/3.9 |
| C965 | 4030006880 | S.CER C1608 JB 1H 472K-T | T | 208.4/3.9 |
| C967 | 4030011600 | S.CER C1608 JB 1E 104K-T | T | 209/21.4 |
| C968 | 4030011600 | S.CER C1608 JB 1E 104K-T | T | 213/21.4 |
| C969 | 4030011600 | S.CER C1608 JB 1E 104K-T | B | 191.6/19.9 |
| C970 | 4030011600 | S.CER C1608 JB 1E 104K-T | T | 187.9/21.4 |
| C971 | 4030011600 | S.CER C1608 JB 1E 104K-T | T | 193/19.8 |
| C972 | 4030006960 | S.CER C1608 CH 1H 050C-T | B | 208.3/19.3 |
| C973 | 4030006960 | S.CER C1608 CH 1H 050C-T | B | 187.7/19.3 |
| C974 | 4030006880 | S.CER C1608 JB 1H 472K-T | B | 235.8/11.5 |
| | | | | |
| RL1 | 6330001750 | RLY FTR-B4CA012Z | | |
| RL2 | 6330001750 | RLY FTR-B4CA012Z | | |
| RL21 | 6330001750 | RLY FTR-B4CA012Z | | |
| RL22 | 6330001750 | RLY FTR-B4CA012Z | | |
| RL51 | 6330001750 | RLY FTR-B4CA012Z | | |
| RL52 | 6330001750 | RLY FTR-B4CA012Z | | |
| RL81 | 6330001750 | RLY FTR-B4CA012Z | | |
| RL82 | 6330001750 | RLY FTR-B4CA012Z | | |
| RL111 | 6330001750 | RLY FTR-B4CA012Z | | |
| RL112 | 6330001750 | RLY FTR-B4CA012Z | | |
| RL141 | 6330001750 | RLY FTR-B4CA012Z | | |
| RL142 | 6330001750 | RLY FTR-B4CA012Z | | |
| RL171 | 6330001750 | RLY FTR-B4CA012Z | | |
| RL172 | 6330001750 | RLY FTR-B4CA012Z | | |
| RL201 | 6330001750 | RLY FTR-B4CA012Z | | |
| RL202 | 6330001750 | RLY FTR-B4CA012Z | | |
| RL231 | 6330001750 | RLY FTR-B4CA012Z | | |
| RL232 | 6330001750 | RLY FTR-B4CA012Z | | |
| RL261 | 6330001750 | RLY FTR-B4CA012Z | | |

## [BPF UNIT]

| REF NO. | ORDER NO. | DESCRIPTION | M. | H/V LOCATION |
|---|---|---|---|---|
| RL262 | 6330001750 | RLY FTR-B4CA012Z | | |
| RL291 | 6330001750 | RLY FTR-B4CA012Z | | |
| RL292 | 6330001750 | RLY FTR-B4CA012Z | | |
| RL321 | 6330001750 | RLY FTR-B4CA012Z | | |
| RL322 | 6330001750 | RLY FTR-B4CA012Z | | |
| RL351 | 6330001750 | RLY FTR-B4CA012Z | | |
| RL352 | 6330001750 | RLY FTR-B4CA012Z | | |
| RL353 | 6330001750 | RLY FTR-B4CA012Z | | |
| RL354 | 6330001750 | RLY FTR-B4CA012Z | | |
| RL355 | 6330001750 | RLY FTR-B4CA012Z | | |
| RL371 | 6330001750 | RLY FTR-B4CA012Z | | |
| RL381 | 6330001770 | RLY SIP-1A-12Y | | |
| RL401 | 6330001770 | RLY SIP-1A-12Y | | |
| RL402 | 6330001750 | RLY FTR-B4CA012Z | | |
| RL501 | 6330001750 | RLY FTR-B4CA012Z | | |
| RL502 | 6330001750 | RLY FTR-B4CA012Z | | |
| RL531 | 6330001750 | RLY FTR-B4CA012Z | | |
| RL532 | 6330001750 | RLY FTR-B4CA012Z | | |
| RL561 | 6330001750 | RLY FTR-B4CA012Z | | |
| RL562 | 6330001750 | RLY FTR-B4CA012Z | | |
| RL591 | 6330001750 | RLY FTR-B4CA012Z | | |
| RL592 | 6330001750 | RLY FTR-B4CA012Z | | |
| RL621 | 6330001750 | RLY FTR-B4CA012Z | | |
| RL622 | 6330001750 | RLY FTR-B4CA012Z | | |
| RL651 | 6330001750 | RLY FTR-B4CA012Z | | |
| RL652 | 6330001750 | RLY FTR-B4CA012Z | | |
| RL681 | 6330001750 | RLY FTR-B4CA012Z | | |
| RL682 | 6330001750 | RLY FTR-B4CA012Z | | |
| RL711 | 6330001750 | RLY FTR-B4CA012Z | | |
| RL712 | 6330001750 | RLY FTR-B4CA012Z | | |
| RL741 | 6330001750 | RLY FTR-B4CA012Z | | |
| RL742 | 6330001750 | RLY FTR-B4CA012Z | | |
| RL771 | 6330001750 | RLY FTR-B4CA012Z | | |
| RL772 | 6330001750 | RLY FTR-B4CA012Z | | |
| RL801 | 6330001750 | RLY FTR-B4CA012Z | | |
| RL802 | 6330001750 | RLY FTR-B4CA012Z | | |
| RL831 | 6330001750 | RLY FTR-B4CA012Z | | |
| RL832 | 6330001750 | RLY FTR-B4CA012Z | | |
| RL851 | 6330001750 | RLY FTR-B4CA012Z | | |
| RL852 | 6330001750 | RLY FTR-B4CA012Z | | |
| RL853 | 6330001750 | RLY FTR-B4CA012Z | | |
| RL854 | 6330001750 | RLY FTR-B4CA012Z | | |
| RL855 | 6330001750 | RLY FTR-B4CA012Z | | |
| RL871 | 6330001770 | RLY SIP-1A-12Y | | |
| RL900 | 6330001750 | RLY FTR-B4CA012Z | | |
| RL901 | 6330001750 | RLY FTR-B4CA012Z | | |
| RL902 | 6330001750 | RLY FTR-B4CA012Z | | |
| RL903 | 6330001750 | RLY FTR-B4CA012Z | | |
| RL950 | 6330001750 | RLY FTR-B4CA012Z | | |
| RL951 | 6330001750 | RLY FTR-B4CA012Z | | |
| RL952 | 6330001750 | RLY FTR-B4CA012Z | | |
| RL953 | 6330001750 | RLY FTR-B4CA012Z | | |
| RL954 | 6330001750 | RLY FTR-B4CA012Z | | |
| | | | | |
| J1 | 6510020521 | S.CNR 52808-1271 (1290) | T | 6/17 |
| J101 | 6510007020 | CNR TMP-J01X-V6 | | |
| J102 | 6510007020 | CNR TMP-J01X-V6 | | |
| J103 | 6510023750 | CNR 01K1971-10 | | |
| J104 | 6510023750 | CNR 01K1971-10 | | |
| J105 | 6510023750 | CNR 01K1971-10 | | |
| J106 | 6510007020 | CNR TMP-J01X-V6 | | |
| J107 | 6510007020 | CNR TMP-J01X-V6 | | |
| J108 | 6510007020 | CNR TMP-J01X-V6 | | |
| J504 | 6510023750 | CNR 01K1971-10 | | |
| J505 | 6510023750 | CNR 01K1971-10 | | |
| J506 | 6510007020 | CNR TMP-J01X-V6 | | |
| J601 | 6510007020 | CNR TMP-J01X-V6 | | |
| J602 | 6510007020 | CNR TMP-J01X-V6 | | |
| | | | | |
| W506 | 9025900640 | WIR 61/99/130/W13A/W13A | | |
| | | | | |
| EP900 | 6910012350 | S.BEA MMZ1608Y 102BT | B | 218.9/98.8 |
| EP901 | 6910012350 | S.BEA MMZ1608Y 102BT | B | 204.2/100.3 |
| EP902 | 6910012350 | S.BEA MMZ1608Y 102BT | B | 197.2/98.7 |
| EP903 | 6910012350 | S.BEA MMZ1608Y 102BT | B | 189.7/100.1 |
| EP950 | 6910012350 | S.BEA MMZ1608Y 102BT | B | 208.8/3.5 |
| EP951 | 6910012350 | S.BEA MMZ1608Y 102BT | T | 205.4/3.2 |
| EP952 | 6910012350 | S.BEA MMZ1608Y 102BT | B | 193.3/3 |
| EP953 | 6910012350 | S.BEA MMZ1608Y 102BT | B | 184.6/3.8 |

M.=Mounted side (T: Mounted on the Top side, B: Mounted on the Bottom side)
S.=Surface mount

## [MAIN UNIT]

| REF NO. | ORDER NO. | DESCRIPTION | | M. | H/V LOCATION |
|---|---|---|---|---|---|
| IC1 | 1110003870 | S.IC | NJM2058M-TE1 | T | 226/83.5 |
| IC2 | 1110001901 | S.IC | µPC4570G2-T1-A | T | 187/68.8 |
| IC3 | 1130005641 | S.IC | TC4W53F (TE12L,F) | T | 191.1/75.2 |
| IC4 | 1110006300 | S.IC | NJM2172V-TE1 | T | 186.6/85.7 |
| IC5 | 1130005641 | S.IC | TC4W53F (TE12L,F) | T | 184.3/75.2 |
| IC50 | 1190001930 | S.IC | PS7122AL-1A-E3 | B | 114.4/109.1 |
| IC60 | 1110003870 | S.IC | NJM2058M-TE1 | B | 116.1/87.4 |
| IC61 | 1110003870 | S.IC | NJM2058M-TE1 | B | 129.6/94.8 |
| IC100 | 1130005641 | S.IC | TC4W53F (TE12L,F) | T | 211.8/91 |
| IC101 | 1130005641 | S.IC | TC4W53F (TE12L,F) | T | 205/91 |
| IC102 | 1110001901 | S.IC | µPC4570G2-T1-A | T | 209.7/68.5 |
| IC104 | 1110001901 | S.IC | µPC4570G2-T1-A | T | 209.8/43.4 |
| IC105 | 1110006300 | S.IC | NJM2172V-TE1 | T | 220.4/58.4 |
| IC140 | 1110006141 | IC | LA4485-E | | |
| IC180 | 1110006300 | S.IC | NJM2172V-TE1 | T | 187/57.6 |
| IC181 | 1130005641 | S.IC | TC4W53F (TE12L,F) | T | 186.9/40.3 |
| IC182 | 1110006160 | S.IC | TPA6111A2DGN | T | 186.8/35.8 |
| IC191 | 1130005641 | S.IC | TC4W53F (TE12L,F) | T | 193.3/30 |
| IC192 | 1130005641 | S.IC | TC4W53F (TE12L,F) | T | 180.6/30.2 |
| IC201 | 1130005641 | S.IC | TC4W53F (TE12L,F) | T | 147.7/71.6 |
| IC210 | 1110006300 | S.IC | NJM2172V-TE1 | T | 160.5/90.1 |
| IC230 | 1110001901 | S.IC | µPC4570G2-T1-A | T | 68.3/22.2 |
| IC250 | 1130011530 | S.IC | CD74HC4094M96 | T | 137.4/32.2 |
| IC251 | 1160000131 | S.IC | TD62783AFG (S.EL) | T | 125.7/34 |
| IC260 | 1130011530 | S.IC | CD74HC4094M96 | T | 137.4/46.6 |
| IC261 | 1160000131 | S.IC | TD62783AFG (S.EL) | T | 125.7/48.3 |
| IC290 | 1130011530 | S.IC | CD74HC4094M96 | T | 149.4/35.6 |
| IC291 | 1160000131 | S.IC | TD62783AFG (S.EL) | T | 161.1/34 |
| IC310 | 1130011530 | S.IC | CD74HC4094M96 | T | 149.4/50.1 |
| IC311 | 1160000131 | S.IC | TD62783AFG (S.EL) | T | 161.1/48.4 |
| IC330 | 1130012000 | S.IC | M62352AGP C60Q | T | 150.4/61 |
| IC331 | 1130012000 | S.IC | M62352AGP C60Q | T | 161.1/61.1 |
| IC450 | 1180002650 | S.REG | SI-3012KS-TL | B | 212.6/31.3 |
| IC451 | 1180002650 | S.REG | SI-3012KS-TL | B | 160/15.2 |
| IC452 | 1180002650 | S.REG | SI-3012KS-TL | B | 93.6/51.5 |
| IC460 | 1130005641 | S.IC | TC4W53F (TE12L,F) | T | 147.7/80 |
| IC490 | 1130005641 | S.IC | TC4W53F (TE12L,F) | B | 163.4/61.6 |
| IC491 | 1110003870 | S.IC | NJM2058M-TE1 | B | 236.2/21.9 |
| IC495 | 1130011990 | S.IC | SN74LVC1G08DCKR | T | 14.6/122.5 |
| IC501 | 1110006100 | S.IC | NJM5534MD-TE1 | T | 22.6/66.4 |
| IC502 | 1110006100 | S.IC | NJM5534MD-TE1 | T | 22.6/78.5 |
| IC503 | 1110005461 | S.IC | TA4107F (TE12L,F) | T | 23.2/91.9 |
| IC550 | 1180001771 | S.IC | TA79L05F (TE12L,F) | T | 125.5/103.1 |
| IC820 | 1110006131 | S.IC | UPC4094G2-E1-A | T | 83.5/59.3 |
| IC821 | 1110006300 | S.IC | NJM2172V-TE1 | T | 160.5/74.8 |
| | | | | | |
| Q1 | 1590001050 | S.TR | DTC114TUA T106 | B | 217/105.3 |
| Q2 | 1590001050 | S.TR | DTC114TUA T106 | B | 174.9/102.8 |
| Q3 | 1530002060 | S.TR | 2SC4081 T106 R | B | 161.8/96.7 |
| Q4 | 1530002060 | S.TR | 2SC4081 T106 R | B | 172.7/98 |
| Q5 | 1590001330 | S.TR | DTA114EUA T106 | B | 167.1/92 |
| Q6 | 1540000441 | S.TR | 2SD1619T-TD-E | B | 166.4/102.1 |
| Q7 | 1530002060 | S.TR | 2SC4081 T106 R | B | 147.8/110.4 |
| Q8 | 1530002060 | S.TR | 2SC4081 T106 R | T | 222.2/99.7 |
| Q9 | 1530002060 | S.TR | 2SC4081 T106 R | T | 179.3/101 |
| Q50 | 1590001050 | S.TR | DTC114TUA T106 | B | 119/96.6 |
| Q51 | 1590001050 | S.TR | DTC114TUA T106 | B | 118.6/100.4 |
| Q52 | 1530002060 | S.TR | 2SC4081 T106 R | T | 83.5/107.6 |
| Q60 | 1590002710 | S.TR | UMH11NTN | T | 118.7/87.6 |
| Q61 | 1590002150 | S.TR | DTC144TE TL | T | 117.8/80.2 |
| Q62 | 1510000510 | S.TR | 2SA1576A T106R | T | 123.1/93.8 |
| Q63 | 1590001050 | S.TR | DTC114TUA T106 | T | 120.2/79.9 |
| Q64 | 1590002430 | S.TR | DTA144EE TL | T | 120.2/82.2 |
| Q100 | 1590001451 | S.FET | 2SJ144 GR F | T | 214.2/79.1 |
| Q101 | 1590001451 | S.FET | 2SJ144 GR F | T | 204.6/79.1 |
| Q131 | 1560001131 | S.FET | CPH3403-TL-E | T | 228.6/70.9 |
| Q132 | 1560001131 | S.FET | CPH3403-TL-E | T | 233.4/47.7 |
| Q140 | 1540000471 | S.TR | 2SD1801S-TL-E | T | 241.8/37.3 |
| Q141 | 1590000680 | S.TR | DTC114EUA T106 | B | 247.8/92.4 |
| Q142 | 1590000680 | S.TR | DTC114EUA T106 | B | 239.9/92.4 |
| Q143 | 1590001050 | S.TR | DTC114TUA T106 | T | 255.3/55.4 |
| Q351 | 1560001260 | S.FET | 2SK3018 T106 | T | 129.8/85.1 |
| Q352 | 1530002060 | S.TR | 2SC4081 T106 R | T | 132.7/85.1 |
| Q474 | 1510000510 | S.TR | 2SA1576A T106R | T | 132.4/77.2 |
| Q476 | 1590001050 | S.TR | DTC114TUA T106 | T | 129.4/77.1 |
| Q490 | 1590000680 | S.TR | DTC114EUA T106 | B | 232.2/4.5 |
| Q491 | 1520000460 | S.TR | 2SB1132 T100 R | B | 224.3/4.2 |
| Q501 | 1580000751 | S.FET | 3SK294 (TE85L,F) | B | 26.9/91.8 |
| Q502 | 1590000680 | S.TR | DTC114EUA T106 | T | 47.1/79.4 |
| Q503 | 1590002710 | S.TR | UMH11NTN | T | 47.3/75.9 |
| Q504 | 1560000561 | S.FET | 2SK882-GR (TE85L,F) | B | 49.3/91.2 |
| Q506 | 1560000561 | S.FET | 2SK882-GR (TE85L,F) | B | 102.7/82.6 |
| Q507 | 1530003151 | S.TR | 2SC4673D-TD-E | T | 103.9/65.5 |
| Q508 | 1530003841 | S.TR | 2SC5501-4-TR-E | T | 58.8/68.8 |
| Q801 | 1530003851 | S.TR | 2SC5551F-TD-E | T | 43.1/18.2 |
| Q802 | 1520000531 | S.TR | 2SB1119S-TD-E | B | 89.9/83.7 |
| Q803 | 1590000680 | S.TR | DTC114EUA T106 | B | 83.7/84.8 |
| Q804 | 1590002710 | S.TR | UMH11NTN | T | 33.9/20.3 |
| Q805 | 1590000680 | S.TR | DTC114EUA T106 | T | 30.9/21.6 |
| Q806 | 1530002060 | S.TR | 2SC4081 T106 R | T | 35.5/73.8 |
| Q808 | 1590001330 | S.TR | DTA114EUA T106 | T | 45.6/70.2 |

## [MAIN UNIT]

| REF NO. | ORDER NO. | DESCRIPTION | | M. | H/V LOCATION |
|---|---|---|---|---|---|
| Q809 | 1590000680 | S.TR | DTC114EUA T106 | T | 48.7/70.2 |
| Q810 | 1530002060 | S.TR | 2SC4081 T106 R | T | 231.4/34.2 |
| | | | | | |
| | | | | | |
| D1 | 1750000550 | S.DIO | 1SS355 TE-17 | B | 162.9/104.2 |
| D2 | 1750000550 | S.DIO | 1SS355 TE-17 | B | 170.6/104.2 |
| D3 | 1790001750 | S.DIO | DSM3MA4 | B | 65.5/122.7 |
| D4 | 1790001750 | S.DIO | DSM3MA4 | B | 65.5/113.6 |
| D50 | 1750000550 | S.DIO | 1SS355 TE-17 | B | 114.5/100.6 |
| D51 | 1790001670 | S.DIO | RB706F-40T106 | T | 90.8/112.8 |
| D52 | 1750000550 | S.DIO | 1SS355 TE-17 | T | 88.4/112.8 |
| D60 | 1750000550 | S.DIO | 1SS355 TE-17 | B | 126.8/86.8 |
| D61 | 1750000550 | S.DIO | 1SS355 TE-17 | B | 126.6/83.4 |
| D62 | 1750000550 | S.DIO | 1SS355 TE-17 | B | 120.6/77.6 |
| D63 | 1750000550 | S.DIO | 1SS355 TE-17 | B | 116.5/93.6 |
| D64 | 1790001240 | S.DIO | MA2S728-(TX) | B | 108.1/78.3 |
| D65 | 1750000550 | S.DIO | 1SS355 TE-17 | B | 123.1/100.1 |
| D66 | 1750000550 | S.DIO | 1SS355 TE-17 | B | 134.3/89.4 |
| D67 | 1730002340 | S.ZEN | MA8047-M (TX) | B | 122.8/95.8 |
| D140 | 1750000550 | S.DIO | 1SS355 TE-17 | B | 247.8/95.1 |
| D141 | 1750000550 | S.DIO | 1SS355 TE-17 | B | 239.9/95.1 |
| D241 | 1730002280 | S.ZEN | MA8091-M (TX) | T | 231.2/32 |
| D351 | 1790001250 | S.DIO | MA2S111-(TX) | T | 129.7/83.2 |
| D450 | 1710000840 | S.DIO | 1SR154-400 TE25 | B | 218.9/28 |
| D451 | 1710000840 | S.DIO | 1SR154-400 TE25 | B | 153.4/16 |
| D452 | 1710000840 | S.DIO | 1SR154-400 TE25 | B | 93.6/58 |
| D490 | 1790000620 | S.DIO | MA77 (TX) | B | 237.5/5.4 |
| D501 | 1790000620 | S.DIO | MA77 (TX) | B | 34.3/94.1 |
| D502 | 1790000620 | S.DIO | MA77 (TX) | B | 34.3/91.8 |
| D503 | 1790000620 | S.DIO | MA77 (TX) | B | 46.6/91.4 |
| D504 | 1790000620 | S.DIO | MA77 (TX) | B | 46.7/85.3 |
| D505 | 1750000431 | S.DIO | HSB88WSTR-E | T | 70.2/90.8 |
| D506 | 1750000431 | S.DIO | HSB88WSTR-E | T | 84.3/69.4 |
| D601 | 1790000620 | S.DIO | MA77 (TX) | B | 34.7/54 |
| D602 | 1790000620 | S.DIO | MA77 (TX) | B | 34.7/33 |
| D603 | 1790000620 | S.DIO | MA77 (TX) | B | 45.5/54 |
| D604 | 1790000620 | S.DIO | MA77 (TX) | B | 45.5/33 |
| D605 | 1790000620 | S.DIO | MA77 (TX) | B | 56.3/54 |
| D606 | 1790000620 | S.DIO | MA77 (TX) | B | 56.3/33 |
| D607 | 1790000620 | S.DIO | MA77 (TX) | B | 67.1/54 |
| D608 | 1790000620 | S.DIO | MA77 (TX) | B | 67.1/33 |
| D609 | 1790000620 | S.DIO | MA77 (TX) | B | 78/54 |
| D610 | 1790000620 | S.DIO | MA77 (TX) | B | 78/33 |
| D611 | 1790000620 | S.DIO | MA77 (TX) | T | 40.8/54 |
| D612 | 1790000620 | S.DIO | MA77 (TX) | T | 40.8/33 |
| D613 | 1790000620 | S.DIO | MA77 (TX) | T | 48.7/54 |
| D614 | 1790000620 | S.DIO | MA77 (TX) | T | 49.8/33 |
| D615 | 1790000620 | S.DIO | MA77 (TX) | T | 58.9/54 |
| D616 | 1790000620 | S.DIO | MA77 (TX) | T | 58.8/33 |
| D617 | 1790000620 | S.DIO | MA77 (TX) | T | 67.8/54 |
| D618 | 1790000620 | S.DIO | MA77 (TX) | T | 67.8/33 |
| D619 | 1790000620 | S.DIO | MA77 (TX) | T | 76.8/54 |
| D620 | 1790000620 | S.DIO | MA77 (TX) | T | 76.8/33 |
| D801 | 1790000620 | S.DIO | MA77 (TX) | T | 36.5/29.9 |
| D802 | 1750000581 | S.DIO | 1SV307 (TPH3,F) | T | 34.7/29.9 |
| D806 | 1790000620 | S.DIO | MA77 (TX) | B | 84.2/76.6 |
| D820 | 1750000581 | S.DIO | 1SV307 (TPH3,F) | T | 86/33 |
| | | | | | |
| | | | | | |
| FI501 | 2020001070 | CER | CFWLA455KDFA-B0 | | |
| FI502 | 2020001510 | CER | CFWLA455KJFA-B0 | | |
| FI503 | 2010002580 | S.FIL | FL-348 (64.455 MHz) | T | 93.4/90.8 |
| | | | | | |
| | | | | | |
| L1 | 6200003261 | S.COL | NLV32T-101J | B | 211.7/110.3 |
| L2 | 6200003261 | S.COL | NLV32T-101J | B | 222.2/110.3 |
| L3 | 6200003950 | S.COL | HF50ACC 322513-T | B | 204.7/110.3 |
| L4 | 6200003261 | S.COL | NLV32T-101J | T | 218.7/109.6 |
| L5 | 6200003261 | S.COL | NLV32T-101J | B | 225.7/110.3 |
| L6 | 6200003261 | S.COL | NLV32T-101J | B | 215.2/110.3 |
| L7 | 6200003950 | S.COL | HF50ACC 322513-T | T | 208.2/109.6 |
| L8 | 6200003261 | S.COL | NLV32T-101J | B | 200.4/110.3 |
| L9 | 6200003950 | S.COL | HF50ACC 322513-T | B | 193.4/110 |
| L10 | 6200003261 | S.COL | NLV32T-101J | B | 196.9/110.3 |
| L11 | 6200003261 | S.COL | NLV32T-101J | B | 169.7/110.3 |
| L12 | 6200003261 | S.COL | NLV32T-101J | B | 180.2/110.3 |
| L13 | 6200003950 | S.COL | HF50ACC 322513-T | B | 162.7/110.3 |
| L14 | 6200003261 | S.COL | NLV32T-101J | T | 176.7/109.7 |
| L15 | 6200003261 | S.COL | NLV32T-101J | B | 183.7/110.3 |
| L16 | 6200003261 | S.COL | NLV32T-101J | B | 173.2/110.3 |
| L17 | 6200003950 | S.COL | HF50ACC 322513-T | T | 166.2/109.2 |
| L18 | 6200003261 | S.COL | NLV32T-101J | B | 158.4/110.3 |
| L19 | 6200003950 | S.COL | HF50ACC 322513-T | B | 151.4/110 |
| L20 | 6200003261 | S.COL | NLV32T-101J | B | 154.9/110.3 |
| L21 | 6200003950 | S.COL | HF50ACC 322513-T | B | 211.7/124.6 |
| L22 | 6200003950 | S.COL | HF50ACC 322513-T | B | 169.7/124.5 |
| L31 | 6200003261 | S.COL | NLV32T-101J | B | 194.2/88.9 |
| L50 | 6200003261 | S.COL | NLV32T-101J | B | 139.6/122.6 |
| L51 | 6200003590 | S.COL | EXCCL3225U1 | B | 122.1/107.2 |
| L52 | 6200003261 | S.COL | NLV32T-101J | B | 77.2/122.3 |
| L53 | 6200003261 | S.COL | NLV32T-101J | B | 77.2/117.4 |
| L54 | 6200003261 | S.COL | NLV32T-101J | T | 85.8/112.8 |

M.=Mounted side (T: Mounted on the Top side, B: Mounted on the Bottom side)
S.=Surface mount

## [MAIN UNIT]

| REF NO. | ORDER NO. | DESCRIPTION | M. | H/V LOCATION |
|---|---|---|---|---|
| L55 | 6200003261 | S.COL NLV32T-101J | B | 95.6/107.2 |
| L56 | 6200003590 | S.COL EXCCL3225U1 | B | 63.9/107.4 |
| L80 | 6200009790 | S.COL BLM31PG121SN1 | B | 53.4/118.4 |
| L140 | 6200003261 | S.COL NLV32T-101J | T | 219.7/48.1 |
| L141 | 2040000490 | COL EXC-ELDR25C | | |
| L142 | 2040000490 | COL EXC-ELDR25C | | |
| L143 | 2040000490 | COL EXC-ELDR25C | | |
| L180 | 6200003261 | S.COL NLV32T-101J | T | 186.9/44.5 |
| L181 | 6200003261 | S.COL NLV32T-101J | T | 181.2/40.1 |
| L201 | 6200003261 | S.COL NLV32T-101J | T | 165/81.4 |
| L210 | 6200003261 | S.COL NLV32T-101J | T | 156.1/85.2 |
| L250 | 6200003590 | S.COL EXCCL3225U1 | T | 134.6/55.7 |
| L290 | 6200003590 | S.COL EXCCL3225U1 | T | 152/28.2 |
| L330 | 6200001831 | S.COL NLV32T-100J | B | 161.4/68.9 |
| L331 | 6200001831 | S.COL NLV32T-100J | B | 164.8/68.9 |
| L340 | 6200003950 | S.COL HF50ACC 322513-T | B | 201.7/96.1 |
| L341 | 6200003950 | S.COL HF50ACC 322513-T | B | 195.5/96.1 |
| L360 | 6200003950 | S.COL HF50ACC 322513-T | B | 149.7/96.1 |
| L361 | 6200003950 | S.COL HF50ACC 322513-T | B | 143.5/96.1 |
| L380 | 6200003950 | S.COL HF50ACC 322513-T | B | 28.5/41.9 |
| L381 | 6200003950 | S.COL HF50ACC 322513-T | B | 28.5/48.1 |
| L400 | 6200003950 | S.COL HF50ACC 322513-T | T | 238.3/10.9 |
| L401 | 6200003950 | S.COL HF50ACC 322513-T | B | 234/11.2 |
| L402 | 6200003950 | S.COL HF50ACC 322513-T | B | 237.3/11.2 |
| L405 | 6200003950 | S.COL HF50ACC 322513-T | T | 40.3/11.3 |
| L406 | 6200003950 | S.COL HF50ACC 322513-T | T | 34.3/11.3 |
| L407 | 6200003950 | S.COL HF50ACC 322513-T | T | 37.3/11.3 |
| L410 | 6200003590 | S.COL EXCCL3225U1 | T | 10.9/41 |
| L411 | 6200003950 | S.COL HF50ACC 322513-T | B | 10.9/39.6 |
| L412 | 6200003590 | S.COL EXCCL3225U1 | T | 10.9/38 |
| L413 | 6200003950 | S.COL HF50ACC 322513-T | B | 10.9/36.4 |
| L418 | 6200003950 | S.COL HF50ACC 322513-T | B | 11.1/97.2 |
| L435 | 6200003950 | S.COL HF50ACC 322513-T | B | 6.7/76.7 |
| L440 | 6200003950 | S.COL HF50ACC 322513-T | T | 164.1/12.7 |
| L441 | 6200003950 | S.COL HF50ACC 322513-T | T | 161.1/12.7 |
| L450 | 6200003590 | S.COL EXCCL3225U1 | B | 251.2/16.8 |
| L451 | 6170000150 | COL LW-16 | | |
| L452 | 6200003590 | S.COL EXCCL3225U1 | T | 250.2/25.4 |
| L453 | 6200003590 | S.COL EXCCL3225U1 | T | 250.2/28.4 |
| L454 | 6200009790 | S.COL BLM31PG121SN1 | B | 250.6/30.2 |
| L455 | 6200009790 | S.COL BLM31PG121SN1 | B | 250.6/32.5 |
| L456 | 6200003590 | S.COL EXCCL3225U1 | T | 250.4/39.6 |
| L480 | 6200003950 | S.COL HF50ACC 322513-T | B | 220.6/24 |
| L481 | 6200003950 | S.COL HF50ACC 322513-T | B | 149.8/17.1 |
| L482 | 6200003950 | S.COL HF50ACC 322513-T | B | 94.1/61.2 |
| L495 | 6200003191 | S.COL NLV32T-470J | B | 24.9/119.2 |
| L496 | 6200003191 | S.COL NLV32T-470J | B | 9.8/119 |
| L501 | 6200003261 | S.COL NLV32T-101J | T | 24.4/101.3 |
| L502 | 6200003261 | S.COL NLV32T-101J | T | 21.4/97.1 |
| L503 | 6200003261 | S.COL NLV32T-101J | T | 24.4/97.1 |
| L504 | 6200003520 | S.COL ELJFB 102K-F | T | 30.6/92.2 |
| L505 | 6150004090 | COL LS-469 | | |
| L507 | 6140003530 | COL LR-395 | | |
| L508 | 6140003210 | S.COL LR-358 | T | 75.9/90.8 |
| L509 | 6140003770 | S.COL LR-414 4KBL (STP-01435) | T | 85.2/90.8 |
| L510 | 6140003770 | S.COL LR-414 4KBL (STP-01435) | T | 101.6/90.8 |
| L511 | 6200003031 | S.COL NLV32T-R47J | B | 101.9/85.8 |
| L512 | 6150004280 | COL LS-484B (C-14927) | | |
| L513 | 6140002551 | S.COL #617DB-1919=P3 | T | 90.6/69.4 |
| L514 | 6140002551 | S.COL #617DB-1919=P3 | T | 78/69.4 |
| L515 | 6200003001 | S.COL NLV32T-R22J | T | 111.3/65.7 |
| L516 | 6200003021 | S.COL NLV32T-R33J | T | 102.8/71.4 |
| L517 | 6200001831 | S.COL NLV32T-100J | T | 99.4/73.5 |
| L518 | 6200010720 | S.COL C2520C-56NG-A | T | 71.2/69.1 |
| L519 | 6200010860 | S.COL C2520C-R10G-A | T | 67.6/70.3 |
| L521 | 6140003900 | COL LR-489 | | |
| L522 | 6140003890 | COL LR-488 | | |
| L523 | 6200010381 | S.COL ELJRE R15JFA | B | 90.6/76.8 |
| L524 | 6180002971 | S.COL NLV32T-068J | B | 102.6/63.5 |
| L525 | 6180002971 | S.COL NLV32T-068J | B | 100.7/67.3 |
| L526 | 6180002971 | S.COL NLV32T-068J | B | 97/67.2 |
| L527 | 6200010660 | S.COL C2520C-R15G-A | T | 64/71.6 |
| L528 | 6200003261 | S.COL NLV32T-101J | T | 33.6/96.3 |
| L529 | 6200010381 | S.COL ELJRE R15JFA | B | 93.2/78.1 |
| L601 | 6200003101 | S.COL NLV32T-3R9J | B | 38.2/53.1 |
| L602 | 6200003131 | S.COL NLV32T-120J | B | 34.7/49.6 |
| L603 | 6200003131 | S.COL NLV32T-120J | B | 38.9/43.2 |
| L604 | 6200003131 | S.COL NLV32T-120J | B | 34.7/37.4 |
| L605 | 6200003101 | S.COL NLV32T-3R9J | B | 38.2/33.8 |
| L606 | 6200002961 | S.COL NLV32T-4R7J | B | 49/53.1 |
| L607 | 6200001851 | S.COL NLV32T-5R6J | B | 45.5/49.6 |
| L608 | 6200001851 | S.COL NLV32T-5R6J | B | 49.7/43.5 |
| L609 | 6200001851 | S.COL NLV32T-5R6J | B | 45.5/37.4 |
| L610 | 6200002961 | S.COL NLV32T-4R7J | B | 49/33.8 |
| L611 | 6200002991 | S.COL NLV32T-2R2J | B | 59.8/53.1 |
| L612 | 6200003111 | S.COL NLV32T-6R8J | B | 56.3/49.6 |
| L613 | 6200003111 | S.COL NLV32T-6R8J | B | 60.5/43.5 |
| L614 | 6200003111 | S.COL NLV32T-6R8J | B | 56.3/37.4 |
| L615 | 6200002991 | S.COL NLV32T-2R2J | B | 59.8/33.8 |
| L616 | 6200002991 | S.COL NLV32T-2R2J | B | 70.7/53.1 |
| L617 | 6200003321 | S.COL NLV32T-3R3J | B | 67.1/49.6 |
| L618 | 6200003321 | S.COL NLV32T-3R3J | B | 71.3/43.5 |

## [MAIN UNIT]

| REF NO. | ORDER NO. | DESCRIPTION | M. | H/V LOCATION |
|---|---|---|---|---|
| L619 | 6200003321 | S.COL NLV32T-3R3J | B | 67.1/37.4 |
| L620 | 6200002991 | S.COL NLV32T-2R2J | B | 70.6/33.8 |
| L621 | 6200003061 | S.COL NLV32T-1R2J | B | 81.5/53.1 |
| L622 | 6200003091 | S.COL NLV32T-2R7J | B | 78/49.6 |
| L623 | 6200003091 | S.COL NLV32T-2R7J | B | 82.2/43.5 |
| L624 | 6200003091 | S.COL NLV32T-2R7J | B | 78/37.4 |
| L625 | 6200003061 | S.COL NLV32T-1R2J | B | 81.5/33.8 |
| L626 | 6200003331 | S.COL NLV32T-1R0J | T | 37.8/50 |
| L627 | 6200003081 | S.COL NLV32T-1R8J | T | 40.8/50 |
| L628 | 6200003081 | S.COL NLV32T-1R8J | T | 40.2/43.5 |
| L629 | 6200003081 | S.COL NLV32T-1R8J | T | 40.8/36.9 |
| L630 | 6200003331 | S.COL NLV32T-1R0J | T | 37.8/36.9 |
| L631 | 6200003041 | S.COL NLV32T-R68J | T | 46.8/50 |
| L632 | 6200003071 | S.COL NLV32T-1R5J | T | 49.8/50 |
| L633 | 6200003071 | S.COL NLV32T-1R5J | T | 49.2/43.5 |
| L634 | 6200003071 | S.COL NLV32T-1R5J | T | 49.8/36.9 |
| L635 | 6200003041 | S.COL NLV32T-R68J | T | 46.8/36.9 |
| L636 | 6200002981 | S.COL NLV32T-R56J | T | 55.8/50 |
| L637 | 6200003051 | S.COL NLV32T-R82J | T | 58.9/50 |
| L638 | 6200003051 | S.COL NLV32T-R82J | T | 58.2/43.5 |
| L639 | 6200003051 | S.COL NLV32T-R82J | T | 58.8/36.9 |
| L640 | 6200002981 | S.COL NLV32T-R56J | T | 55.8/36.9 |
| L641 | 6200003021 | S.COL NLV32T-R33J | T | 64.8/50 |
| L642 | 6200003041 | S.COL NLV32T-R68J | T | 67.8/50 |
| L643 | 6200003041 | S.COL NLV32T-R68J | T | 67.2/43.5 |
| L644 | 6200003041 | S.COL NLV32T-R68J | T | 67.8/36.9 |
| L645 | 6200003021 | S.COL NLV32T-R33J | T | 64.8/36.9 |
| L646 | 6200005491 | S.COL NLV32T-331J | T | 79.8/50 |
| L647 | 6200007810 | S.COL LQH31HN95NK03L | T | 73.2/51.3 |
| L648 | 6200009810 | S.COL LQH31HNR61J03L | T | 76.8/50 |
| L649 | 6200009810 | S.COL LQH31HNR61J03L | T | 75.5/43.7 |
| L650 | 6200009810 | S.COL LQH31HNR61J03L | T | 76.8/36.9 |
| L651 | 6200007810 | S.COL LQH31HN95NK03L | T | 73.2/35.5 |
| L801 | 6200005491 | S.COL NLV32T-331J | T | 37.2/23.4 |
| L802 | 6200003261 | S.COL NLV32T-101J | B | 37.2/23.8 |
| L803 | 6140003970 | COL LR-494 | | |
| L804 | 6200003241 | S.COL NLV32T-221J | B | 49.2/26 |
| L820 | 6200003161 | S.COL NLV32T-270J | T | 86.6/48.4 |
| L821 | 6200003191 | S.COL NLV32T-470J | T | 85.8/44.9 |
| L822 | 6200003201 | S.COL NLV32T-560J | T | 86.6/39.8 |
| | | | | |
| R1 | 7030003550 | S.RES ERJ3GEYJ 822 V (8.2 k) | B | 214.8/107.3 |
| R2 | 7030003550 | S.RES ERJ3GEYJ 822 V (8.2 k) | B | 174.1/104.9 |
| R3 | 7030003520 | S.RES ERJ3GEYJ 472 V (4.7 k) | B | 161.1/103.9 |
| R4 | 7030003620 | S.RES ERJ3GEYJ 333 V (33 k) | B | 161.1/101.1 |
| R5 | 7030003580 | S.RES ERJ3GEYJ 153 V (15 k) | B | 161.9/99.1 |
| R6 | 7030003520 | S.RES ERJ3GEYJ 472 V (4.7 k) | B | 161.8/93.8 |
| R7 | 7030003520 | S.RES ERJ3GEYJ 472 V (4.7 k) | B | 172.2/104.2 |
| R8 | 7030003620 | S.RES ERJ3GEYJ 333 V (33 k) | B | 170.6/101.2 |
| R9 | 7030003580 | S.RES ERJ3GEYJ 153 V (15 k) | B | 172.8/100.4 |
| R10 | 7030003520 | S.RES ERJ3GEYJ 472 V (4.7 k) | B | 172.7/95.1 |
| R11 | 7030009891 | S.RES ERA3YED 151V (150) | B | 167.1/94.5 |
| R12 | 7030003560 | S.RES ERJ3GEYJ 103 V (10 k) | B | 167.1/96.3 |
| R13 | 7030003480 | S.RES ERJ3GEYJ 222 V (2.2 k) | B | 148.7/106.9 |
| R14 | 7030003560 | S.RES ERJ3GEYJ 103 V (10 k) | B | 146.9/106.9 |
| R15 | 7030003640 | S.RES ERJ3GEYJ 473 V (47 k) | B | 145.1/110.4 |
| R16 | 7030003680 | S.RES ERJ3GEYJ 104 V (100 k) | T | 224.8/77.8 |
| R17 | 7030003680 | S.RES ERJ3GEYJ 104 V (100 k) | T | 223.4/77.8 |
| R18 | 7030003400 | S.RES ERJ3GEYJ 471 V (470) | T | 222.1/77.8 |
| R19 | 7030003680 | S.RES ERJ3GEYJ 104 V (100 k) | T | 227.2/77.8 |
| R20 | 7030003680 | S.RES ERJ3GEYJ 104 V (100 k) | T | 228.6/77.8 |
| R21 | 7030003400 | S.RES ERJ3GEYJ 471 V (470) | T | 230/77.8 |
| R22 | 7030003560 | S.RES ERJ3GEYJ 103 V (10 k) | T | 180.8/69.6 |
| R23 | 7030003560 | S.RES ERJ3GEYJ 103 V (10 k) | T | 181.6/67.8 |
| R24 | 7030003660 | S.RES ERJ3GEYJ 683 V (68 k) | T | 182.3/69.7 |
| R25 | 7030003440 | S.RES ERJ3GEYJ 102 V (1 k) | T | 181.6/71.6 |
| R26 | 7030003560 | S.RES ERJ3GEYJ 103 V (10 k) | T | 193.3/69.7 |
| R27 | 7030003560 | S.RES ERJ3GEYJ 103 V (10 k) | T | 192.5/67.8 |
| R28 | 7030003660 | S.RES ERJ3GEYJ 683 V (68 k) | T | 191.8/69.7 |
| R29 | 7030003440 | S.RES ERJ3GEYJ 102 V (1 k) | T | 192.5/71.6 |
| R30 | 7030003320 | S.RES ERJ3GEYJ 101 V (100) | T | 192.5/66.5 |
| R31 | 7030003560 | S.RES ERJ3GEYJ 103 V (10 k) | T | 192.9/88 |
| R32 | 7030003560 | S.RES ERJ3GEYJ 103 V (10 k) | T | 192.9/86.7 |
| R33 | 7030003560 | S.RES ERJ3GEYJ 103 V (10 k) | B | 188.8/83.7 |
| R34 | 7030003440 | S.RES ERJ3GEYJ 102 V (1 k) | T | 222.3/96.5 |
| R35 | 7030003580 | S.RES ERJ3GEYJ 153 V (15 k) | T | 222.3/97.8 |
| R36 | 7030003580 | S.RES ERJ3GEYJ 153 V (15 k) | T | 225.1/99 |
| R37 | 7030003320 | S.RES ERJ3GEYJ 101 V (100) | T | 219.7/97.8 |
| R38 | 7030003390 | S.RES ERJ3GEYJ 391 V (390) | T | 225.1/100.3 |
| R39 | 7030003440 | S.RES ERJ3GEYJ 102 V (1 k) | T | 179.3/97.8 |
| R40 | 7030003580 | S.RES ERJ3GEYJ 153 V (15 k) | T | 179.3/99.1 |
| R41 | 7030003580 | S.RES ERJ3GEYJ 153 V (15 k) | T | 182.3/100.3 |
| R42 | 7030003320 | S.RES ERJ3GEYJ 101 V (100) | T | 176.5/99.1 |
| R43 | 7030003390 | S.RES ERJ3GEYJ 391 V (390) | T | 182.3/101.6 |
| R44 | 7030003320 | S.RES ERJ3GEYJ 101 V (100) | T | 181.6/66.5 |
| R45 | 7030003620 | S.RES ERJ3GEYJ 333 V (33 k) | T | 192.9/85.4 |
| R46 | 7030003620 | S.RES ERJ3GEYJ 333 V (33 k) | T | 192.9/89.3 |
| R47 | 7030003560 | S.RES ERJ3GEYJ 103 V (10 k) | B | 185.5/83.7 |
| R49 | 7540000270 | S.ASB ERZVF2M201 | B | 110.1/123.5 |
| R50 | 7310003820 | TRI EVN-D2AA03 B14 | | |
| R51 | 7030003560 | S.RES ERJ3GEYJ 103 V (10 k) | B | 152/123.2 |

M.=Mounted side (T: Mounted on the Top side, B: Mounted on the Bottom side)
S.=Surface mount

## [MAIN UNIT]

| REF NO. | ORDER NO. | DESCRIPTION | M. | H/V LOCATION |
|---|---|---|---|---|
| R52 | 7030003200 | S.RES ERJ3GEYJ 100 V (10) | B | 109.6/98.6 |
| R53 | 7030003390 | S.RES ERJ3GEYJ 391 V (390) | B | 118.6/102.4 |
| R54 | 7030003480 | S.RES ERJ3GEYJ 222 V (2.2 k) | T | 89.9/109.6 |
| R55 | 7030003480 | S.RES ERJ3GEYJ 222 V (2.2 k) | T | 91.3/109.6 |
| R56 | 7030003520 | S.RES ERJ3GEYJ 472 V (4.7 k) | T | 88.4/109.6 |
| R57 | 7030003620 | S.RES ERJ3GEYJ 333 V (33 k) | T | 86.1/109.9 |
| R58 | 7030003580 | S.RES ERJ3GEYJ 153 V (15 k) | T | 83.5/109.9 |
| R59 | 7030003520 | S.RES ERJ3GEYJ 472 V (4.7 k) | T | 85.4/107.6 |
| R60 | 7510001511 | S.TMR NTCG16 4LH 223JT | B | 125/86.8 |
| R61 | 7030003660 | S.RES ERJ3GEYJ 683 V (68 k) | B | 123.2/86.8 |
| R62 | 7030003480 | S.RES ERJ3GEYJ 222 V (2.2 k) | B | 121.4/86.8 |
| R63 | 7030003680 | S.RES ERJ3GEYJ 104 V (100 k) | B | 124/82.5 |
| R64 | 7030003560 | S.RES ERJ3GEYJ 103 V (10 k) | B | 124/84.3 |
| R65 | 7030003720 | S.RES ERJ3GEYJ 224 V (220 k) | B | 121.4/83.5 |
| R66 | 7030003320 | S.RES ERJ3GEYJ 101 V (100) | B | 121.4/80.2 |
| R67 | 7030005681 | S.RES ERA3YKD 473V (47 k) | B | 105.3/90.5 |
| R68 | 7030008121 | S.RES ERA3YED 682V (6.8 k) | B | 110/87.9 |
| R69 | 7310005110 | S.TRI RH03ADCS2X (470) | T | 108.9/90 |
| R70 | 7030008121 | S.RES ERA3YED 682V (6.8 k) | B | 108.9/90.5 |
| R71 | 7030005681 | S.RES ERA3YKD 473V (47 k) | B | 107.1/90.5 |
| R72 | 7030003740 | S.RES ERJ3GEYJ 334 V (330 k) | B | 110.7/90.5 |
| R73 | 7030003520 | S.RES ERJ3GEYJ 472 V (4.7 k) | T | 109/78 |
| R74 | 7030003720 | S.RES ERJ3GEYJ 224 V (220 k) | B | 121.4/91.9 |
| R75 | 7030003600 | S.RES ERJ3GEYJ 223 V (22 k) | T | 108/86.3 |
| R76 | 7030003620 | S.RES ERJ3GEYJ 333 V (33 k) | T | 110.6/86.3 |
| R77 | 7030003720 | S.RES ERJ3GEYJ 224 V (220 k) | B | 110.7/85.6 |
| R78 | 7030003680 | S.RES ERJ3GEYJ 104 V (100 k) | T | 118/90.4 |
| R79 | 7310005150 | S.TRI RH03ADCJ5X (220 k) | T | 114.5/90 |
| R80 | 7030003680 | S.RES ERJ3GEYJ 104 V (100 k) | T | 118.7/84.6 |
| R81 | 7310005150 | S.TRI RH03ADCJ5X (220 k) | T | 114.5/85.1 |
| R82 | 7310005190 | S.TRI RH03ADC15X (100 k) | T | 114.5/80.2 |
| R83 | 7030003680 | S.RES ERJ3GEYJ 104 V (100 k) | B | 116.6/79.2 |
| R84 | 7030003720 | S.RES ERJ3GEYJ 224 V (220 k) | B | 116.6/81 |
| R85 | 7030009920 | S.RES ERJ3GEYJ 335 V (3.3 M) | B | 113.3/81 |
| R86 | 7030003380 | S.RES ERJ3GEYJ 331 V (330) | B | 110.7/80.2 |
| R87 | 7030003320 | S.RES ERJ3GEYJ 101 V (100) | T | 116.1/77.8 |
| R88 | 7030003440 | S.RES ERJ3GEYJ 102 V (1 k) | T | 123/95.8 |
| R89 | 7030003440 | S.RES ERJ3GEYJ 102 V (1 k) | T | 125.6/93.2 |
| R90 | 7030003800 | S.RES ERJ3GEYJ 105 V (1 M) | B | 129.6/85.8 |
| R91 | 7030003660 | S.RES ERJ3GEYJ 683 V (68 k) | B | 129.6/88.6 |
| R92 | 7030003380 | S.RES ERJ3GEYJ 331 V (330) | B | 119.5/93.4 |
| R93 | 7310005050 | S.TRI RH03ADCS3X (4.7 k) | T | 108.9/80.4 |
| R94 | 7030003320 | S.RES ERJ3GEYJ 101 V (100) | B | 136.8/95 |
| R95 | 7030003840 | S.RES ERJ3GEYJ 225 V (2.2 M) | B | 129.7/100.1 |
| R96 | 7030009920 | S.RES ERJ3GEYJ 335 V (3.3 M) | B | 126.4/103.7 |
| R97 | 7030011040 | S.RES ERJ3GEYJ 685 V (6.8 M) | B | 126.4/100.1 |
| R98 | 7030003320 | S.RES ERJ3GEYJ 101 V (100) | T | 122.8/90.8 |
| R99 | 7030000380 | S.RES MCR10EZHJ 1 k | B | 126.2/89.4 |
| R100 | 7030003440 | S.RES ERJ3GEYJ 102 V (1 k) | T | 216.4/79.1 |
| R101 | 7030003520 | S.RES ERJ3GEYJ 472 V (4.7 k) | T | 210.7/79.1 |
| R102 | 7030003680 | S.RES ERJ3GEYJ 104 V (100 k) | T | 212/79.1 |
| R103 | 7030003560 | S.RES ERJ3GEYJ 103 V (10 k) | T | 215.7/77 |
| R104 | 7030003560 | S.RES ERJ3GEYJ 103 V (10 k) | T | 214.3/70 |
| R105 | 7030003440 | S.RES ERJ3GEYJ 102 V (1 k) | T | 206.8/79.1 |
| R106 | 7030003520 | S.RES ERJ3GEYJ 472 V (4.7 k) | T | 201.1/79.1 |
| R107 | 7030003680 | S.RES ERJ3GEYJ 104 V (100 k) | T | 202.4/79.1 |
| R108 | 7030003560 | S.RES ERJ3GEYJ 103 V (10 k) | T | 206.1/77 |
| R109 | 7030003560 | S.RES ERJ3GEYJ 103 V (10 k) | T | 205.1/70 |
| R110 | 7030003560 | S.RES ERJ3GEYJ 103 V (10 k) | T | 216.5/91 |
| R111 | 7030003560 | S.RES ERJ3GEYJ 103 V (10 k) | T | 215.2/91 |
| R113 | 7030003440 | S.RES ERJ3GEYJ 102 V (1 k) | T | 215.6/70 |
| R114 | 7030003560 | S.RES ERJ3GEYJ 103 V (10 k) | T | 214.3/67.3 |
| R115 | 7030003440 | S.RES ERJ3GEYJ 102 V (1 k) | T | 203.8/70 |
| R116 | 7030003560 | S.RES ERJ3GEYJ 103 V (10 k) | T | 205.1/67.3 |
| R117 | 7030003620 | S.RES ERJ3GEYJ 333 V (33 k) | T | 124.7/75 |
| R118 | 7030003680 | S.RES ERJ3GEYJ 104 V (100 k) | T | 126/75 |
| R119 | 7030003560 | S.RES ERJ3GEYJ 103 V (10 k) | B | 217/60.1 |
| R120 | 7030003560 | S.RES ERJ3GEYJ 103 V (10 k) | B | 217/56.7 |
| R123 | 7030003520 | S.RES ERJ3GEYJ 472 V (4.7 k) | T | 214.5/46.3 |
| R124 | 7030003520 | S.RES ERJ3GEYJ 472 V (4.7 k) | T | 205.3/47.2 |
| R125 | 7030003320 | S.RES ERJ3GEYJ 101 V (100) | T | 213.6/48.8 |
| R126 | 7030003470 | S.RES ERJ3GEYJ 182 V (1.8 k) | T | 167.3/61.4 |
| R127 | 7030003470 | S.RES ERJ3GEYJ 182 V (1.8 k) | T | 167.3/62.8 |
| R128 | 7030003470 | S.RES ERJ3GEYJ 182 V (1.8 k) | T | 167.3/64.1 |
| R129 | 7030003470 | S.RES ERJ3GEYJ 182 V (1.8 k) | T | 167.3/65.4 |
| R130 | 7030003480 | S.RES ERJ3GEYJ 222 V (2.2 k) | B | 219.7/57.7 |
| R131 | 7030003480 | S.RES ERJ3GEYJ 222 V (2.2 k) | B | 219.6/59.2 |
| R132 | 7030000380 | S.RES MCR10EZHJ 1 k | B | 123.4/92.5 |
| R133 | 7030003520 | S.RES ERJ3GEYJ 472 V (4.7 k) | T | 230.6/61.6 |
| R134 | 7030003440 | S.RES ERJ3GEYJ 102 V (1 k) | T | 232.2/65.3 |
| R135 | 7030003520 | S.RES ERJ3GEYJ 472 V (4.7 k) | T | 232/53 |
| R136 | 7030003440 | S.RES ERJ3GEYJ 102 V (1 k) | T | 232/51.7 |
| R137 | 7030003480 | S.RES ERJ3GEYJ 222 V (2.2 k) | T | 232.2/64 |
| R138 | 7030003320 | S.RES ERJ3GEYJ 101 V (100) | B | 204.5/64.9 |
| R139 | 7030003560 | S.RES ERJ3GEYJ 103 V (10 k) | T | 226.2/71 |
| R140 | 7030003560 | S.RES ERJ3GEYJ 103 V (10 k) | T | 230.4/46.7 |
| R141 | 7030003560 | S.RES ERJ3GEYJ 103 V (10 k) | B | 256.3/59.4 |
| R142 | 7030003640 | S.RES ERJ3GEYJ 473 V (47 k) | B | 254.5/59.4 |
| R143 | 7030004040 | S.RES ERJ3GEYJ 4R7 V (4.7) | B | 252.4/98.6 |
| R144 | 7030004040 | S.RES ERJ3GEYJ 4R7 V (4.7) | B | 244.1/109.8 |
| R145 | 7030003440 | S.RES ERJ3GEYJ 102 V (1 k) | T | 234.8/76.9 |
| R146 | 7510001511 | S.TMR NTCG16 4LH 223JT | T | 232.2/76.9 |

## [MAIN UNIT]

| REF NO. | ORDER NO. | DESCRIPTION | M. | H/V LOCATION |
|---|---|---|---|---|
| R147 | 7030003750 | S.RES ERJ3GEYJ 394 V (390 k) | T | 233.7/75.6 |
| R149 | 7030003360 | S.RES ERJ3GEYJ 221 V (220) | B | 252.2/92.4 |
| R150 | 7030003360 | S.RES ERJ3GEYJ 221 V (220) | B | 243.8/92.4 |
| R151 | 7030003410 | S.RES ERJ3GEYJ 561 V (560) | T | 243.8/33.1 |
| R152 | 7030003320 | S.RES ERJ3GEYJ 101 V (100) | B | 215.1/71.9 |
| R154 | 7030003320 | S.RES ERJ3GEYJ 101 V (100) | T | 206.3/37.3 |
| R155 | 7030003640 | S.RES ERJ3GEYJ 473 V (47 k) | T | 215.3/42.8 |
| R156 | 7030003640 | S.RES ERJ3GEYJ 473 V (47 k) | T | 204.5/39.8 |
| R157 | 7030003480 | S.RES ERJ3GEYJ 222 V (2.2 k) | T | 214.9/82.1 |
| R158 | 7030003480 | S.RES ERJ3GEYJ 222 V (2.2 k) | T | 206/82.6 |
| R159 | 7030003440 | S.RES ERJ3GEYJ 102 V (1 k) | T | 214.3/64.6 |
| R160 | 7030003440 | S.RES ERJ3GEYJ 102 V (1 k) | T | 226.7/92.1 |
| R161 | 7030003480 | S.RES ERJ3GEYJ 222 V (2.2 k) | T | 228/92.1 |
| R162 | 7030003680 | S.RES ERJ3GEYJ 104 V (100 k) | T | 226.7/89.3 |
| R163 | 7030003570 | S.RES ERJ3GEYJ 123 V (12 k) | T | 228/89.3 |
| R164 | 7030003680 | S.RES ERJ3GEYJ 104 V (100 k) | T | 229.3/89.3 |
| R165 | 7030003680 | S.RES ERJ3GEYJ 104 V (100 k) | T | 230.6/89.3 |
| R166 | 7030003400 | S.RES ERJ3GEYJ 471 V (470) | T | 231.9/89.3 |
| R167 | 7030003440 | S.RES ERJ3GEYJ 102 V (1 k) | T | 225.4/92.1 |
| R168 | 7030003480 | S.RES ERJ3GEYJ 222 V (2.2 k) | T | 224.1/92.1 |
| R169 | 7030003680 | S.RES ERJ3GEYJ 104 V (100 k) | T | 225.4/89.3 |
| R170 | 7030003570 | S.RES ERJ3GEYJ 123 V (12 k) | T | 224.1/89.3 |
| R171 | 7030003680 | S.RES ERJ3GEYJ 104 V (100 k) | T | 222.8/89.3 |
| R172 | 7030003680 | S.RES ERJ3GEYJ 104 V (100 k) | T | 221.5/89.3 |
| R173 | 7030003400 | S.RES ERJ3GEYJ 471 V (470) | T | 220.2/89.3 |
| R174 | 7030003440 | S.RES ERJ3GEYJ 102 V (1 k) | T | 205.1/64.5 |
| R175 | 7030003860 | S.RES ERJ3GE JPW V | B | 192.6/39.4 |
| R176 | 7030003450 | S.RES ERJ3GEYJ 122 V (1.2 k) | T | 107.8/82.8 |
| R180 | 7030003560 | S.RES ERJ3GEYJ 103 V (10 k) | B | 190.2/57 |
| R181 | 7030003560 | S.RES ERJ3GEYJ 103 V (10 k) | B | 191.8/57 |
| R183 | 7030003470 | S.RES ERJ3GEYJ 182 V (1.8 k) | T | 167.3/60.1 |
| R184 | 7030003470 | S.RES ERJ3GEYJ 182 V (1.8 k) | T | 167.3/58.8 |
| R185 | 7030003470 | S.RES ERJ3GEYJ 182 V (1.8 k) | T | 167.3/57.5 |
| R186 | 7030003470 | S.RES ERJ3GEYJ 182 V (1.8 k) | T | 167.3/56.2 |
| R187 | 7030003480 | S.RES ERJ3GEYJ 222 V (2.2 k) | T | 180.9/57.8 |
| R188 | 7030003480 | S.RES ERJ3GEYJ 222 V (2.2 k) | T | 180.9/56.5 |
| R189 | 7030003560 | S.RES ERJ3GEYJ 103 V (10 k) | B | 188.9/43.4 |
| R190 | 7030003560 | S.RES ERJ3GEYJ 103 V (10 k) | B | 188.9/40.6 |
| R191 | 7030003440 | S.RES ERJ3GEYJ 102 V (1 k) | T | 194.1/35.6 |
| R192 | 7030003610 | S.RES ERJ3GEYJ 273 V (27 k) | T | 192/34.9 |
| R193 | 7030003440 | S.RES ERJ3GEYJ 102 V (1 k) | T | 178.3/41.3 |
| R194 | 7030003610 | S.RES ERJ3GEYJ 273 V (27 k) | T | 181.7/35.4 |
| R195 | 7030003440 | S.RES ERJ3GEYJ 102 V (1 k) | T | 191.3/44.8 |
| R196 | 7030003440 | S.RES ERJ3GEYJ 102 V (1 k) | T | 183.4/48 |
| R197 | 7030003320 | S.RES ERJ3GEYJ 101 V (100) | T | 125.6/94.5 |
| R198 | 7030003640 | S.RES ERJ3GEYJ 473 V (47 k) | T | 120.2/90.8 |
| R199 | 7030003520 | S.RES ERJ3GEYJ 472 V (4.7 k) | T | 121.7/89 |
| R200 | 7030003560 | S.RES ERJ3GEYJ 103 V (10 k) | B | 166.9/76.4 |
| R201 | 7030003560 | S.RES ERJ3GEYJ 103 V (10 k) | T | 161.2/71.4 |
| R202 | 7030003520 | S.RES ERJ3GEYJ 472 V (4.7 k) | T | 167.5/72.8 |
| R203 | 7030003720 | S.RES ERJ3GEYJ 224 V (220 k) | T | 166.2/73.5 |
| R204 | 7030003320 | S.RES ERJ3GEYJ 101 V (100) | T | 142.2/67.8 |
| R205 | 7030003320 | S.RES ERJ3GEYJ 101 V (100) | B | 148.2/70 |
| R208 | 7030003440 | S.RES ERJ3GEYJ 102 V (1 k) | T | 147.2/75.8 |
| R211 | 7030003560 | S.RES ERJ3GEYJ 103 V (10 k) | T | 162.7/93.7 |
| R212 | 7030003520 | S.RES ERJ3GEYJ 472 V (4.7 k) | T | 165.1/91.5 |
| R213 | 7030003440 | S.RES ERJ3GEYJ 102 V (1 k) | T | 165.1/94.1 |
| R214 | 7030003600 | S.RES ERJ3GEYJ 223 V (22 k) | B | 152.9/84.5 |
| R216 | 7030003620 | S.RES ERJ3GEYJ 333 V (33 k) | B | 152.9/82.7 |
| R218 | 7030003580 | S.RES ERJ3GEYJ 153 V (15 k) | T | 138.3/85.3 |
| R221 | 7030003560 | S.RES ERJ3GEYJ 103 V (10 k) | T | 158.5/93.7 |
| R222 | 7030003520 | S.RES ERJ3GEYJ 472 V (4.7 k) | T | 155.9/91.5 |
| R223 | 7030003440 | S.RES ERJ3GEYJ 102 V (1 k) | T | 155.9/94.1 |
| R224 | 7030003600 | S.RES ERJ3GEYJ 223 V (22 k) | B | 152.9/89.3 |
| R226 | 7030003620 | S.RES ERJ3GEYJ 333 V (33 k) | B | 152.9/87.5 |
| R228 | 7030003580 | S.RES ERJ3GEYJ 153 V (15 k) | T | 138.3/90.2 |
| R230 | 7030003320 | S.RES ERJ3GEYJ 101 V (100) | T | 66.5/5.7 |
| R231 | 7030003320 | S.RES ERJ3GEYJ 101 V (100) | T | 73.9/23.8 |
| R232 | 7030003680 | S.RES ERJ3GEYJ 104 V (100 k) | T | 74.3/20.3 |
| R233 | 7030003560 | S.RES ERJ3GEYJ 103 V (10 k) | T | 76.4/22 |
| R234 | 7030003320 | S.RES ERJ3GEYJ 101 V (100) | T | 73.3/17.2 |
| R235 | 7030003860 | S.RES ERJ3GE JPW V | T | 155.9/58.5 |
| R240 | 7030003420 | S.RES ERJ3GEYJ 681 V (680) | T | 177.1/58.1 |
| R241 | 7030003360 | S.RES ERJ3GEYJ 221 V (220) | T | 233.5/35.2 |
| R242 | 7030003440 | S.RES ERJ3GEYJ 102 V (1 k) | T | 233.4/32.7 |
| R243 | 7030003440 | S.RES ERJ3GEYJ 102 V (1 k) | T | 213.8/40.1 |
| R244 | 7030003440 | S.RES ERJ3GEYJ 102 V (1 k) | T | 217.1/43.5 |
| R245 | 7030003540 | S.RES ERJ3GEYJ 682 V (6.8 k) | T | 215.3/44.3 |
| R246 | 7030003440 | S.RES ERJ3GEYJ 102 V (1 k) | T | 205.3/41.8 |
| R247 | 7030003440 | S.RES ERJ3GEYJ 102 V (1 k) | T | 204/44.6 |
| R248 | 7030003540 | S.RES ERJ3GEYJ 682 V (6.8 k) | T | 205.3/44.6 |
| R249 | 7030003560 | S.RES ERJ3GEYJ 103 V (10 k) | T | 163.3/70.9 |
| R250 | 7030003200 | S.RES ERJ3GEYJ 100 V (10) | B | 117.1/28.7 |
| R251 | 7030003200 | S.RES ERJ3GEYJ 100 V (10) | B | 117.8/30.1 |
| R252 | 7030003200 | S.RES ERJ3GEYJ 100 V (10) | B | 117.1/31.5 |
| R253 | 7030003200 | S.RES ERJ3GEYJ 100 V (10) | B | 117.8/32.9 |
| R254 | 7030003200 | S.RES ERJ3GEYJ 100 V (10) | B | 117.1/34.3 |
| R255 | 7030003200 | S.RES ERJ3GEYJ 100 V (10) | B | 117.8/35.7 |
| R256 | 7030003200 | S.RES ERJ3GEYJ 100 V (10) | B | 117.1/37.1 |
| R257 | 7030003200 | S.RES ERJ3GEYJ 100 V (10) | B | 117.8/38.5 |
| R258 | 7030003560 | S.RES ERJ3GEYJ 103 V (10 k) | B | 120.4/28.7 |
| R259 | 7030003560 | S.RES ERJ3GEYJ 103 V (10 k) | B | 121.2/30.1 |

M.=Mounted side (T: Mounted on the Top side, B: Mounted on the Bottom side)
S.=Surface mount

## [MAIN UNIT]

| REF NO. | ORDER NO. | DESCRIPTION | M. | H/V LOCATION |
|---|---|---|---|---|
| R260 | 7030003560 | S.RES ERJ3GEYJ 103 V (10 k) | B | 120.4/31.5 |
| R261 | 7030003560 | S.RES ERJ3GEYJ 103 V (10 k) | B | 121.2/32.9 |
| R262 | 7030003560 | S.RES ERJ3GEYJ 103 V (10 k) | B | 120.4/34.3 |
| R263 | 7030003560 | S.RES ERJ3GEYJ 103 V (10 k) | B | 121.2/35.7 |
| R264 | 7030003560 | S.RES ERJ3GEYJ 103 V (10 k) | B | 120.4/37.1 |
| R265 | 7030003560 | S.RES ERJ3GEYJ 103 V (10 k) | B | 121.2/38.5 |
| R270 | 7030003200 | S.RES ERJ3GEYJ 100 V (10) | B | 120.6/42.8 |
| R271 | 7030003200 | S.RES ERJ3GEYJ 100 V (10) | B | 121.3/44.2 |
| R272 | 7030003200 | S.RES ERJ3GEYJ 100 V (10) | B | 120.6/45.6 |
| R273 | 7030003200 | S.RES ERJ3GEYJ 100 V (10) | B | 121.3/47 |
| R274 | 7030003200 | S.RES ERJ3GEYJ 100 V (10) | B | 120.6/48.4 |
| R275 | 7030003200 | S.RES ERJ3GEYJ 100 V (10) | B | 121.3/49.8 |
| R276 | 7030003200 | S.RES ERJ3GEYJ 100 V (10) | B | 120.6/51.2 |
| R277 | 7030003200 | S.RES ERJ3GEYJ 100 V (10) | B | 124.2/54.7 |
| R278 | 7030003560 | S.RES ERJ3GEYJ 103 V (10 k) | B | 124.3/42.8 |
| R279 | 7030003560 | S.RES ERJ3GEYJ 103 V (10 k) | B | 125/44.2 |
| R280 | 7030003560 | S.RES ERJ3GEYJ 103 V (10 k) | B | 124.3/45.6 |
| R281 | 7030003560 | S.RES ERJ3GEYJ 103 V (10 k) | B | 125/47 |
| R282 | 7030003560 | S.RES ERJ3GEYJ 103 V (10 k) | B | 124.3/48.4 |
| R283 | 7030003560 | S.RES ERJ3GEYJ 103 V (10 k) | B | 125/49.8 |
| R284 | 7030003560 | S.RES ERJ3GEYJ 103 V (10 k) | B | 124.3/51.2 |
| R285 | 7030003560 | S.RES ERJ3GEYJ 103 V (10 k) | B | 125/52.6 |
| R290 | 7030003200 | S.RES ERJ3GEYJ 100 V (10) | B | 164.1/41.5 |
| R291 | 7030003200 | S.RES ERJ3GEYJ 100 V (10) | B | 164.1/39.7 |
| R292 | 7030003200 | S.RES ERJ3GEYJ 100 V (10) | B | 164.1/37.9 |
| R293 | 7030003200 | S.RES ERJ3GEYJ 100 V (10) | B | 164.1/36.1 |
| R294 | 7030003200 | S.RES ERJ3GEYJ 100 V (10) | B | 164.1/34.3 |
| R295 | 7030003200 | S.RES ERJ3GEYJ 100 V (10) | B | 164.1/32.5 |
| R296 | 7030003200 | S.RES ERJ3GEYJ 100 V (10) | B | 164.1/30.7 |
| R298 | 7030003560 | S.RES ERJ3GEYJ 103 V (10 k) | B | 160.8/41.5 |
| R299 | 7030003560 | S.RES ERJ3GEYJ 103 V (10 k) | B | 160.8/39.7 |
| R300 | 7030003560 | S.RES ERJ3GEYJ 103 V (10 k) | B | 160.8/37.9 |
| R301 | 7030003560 | S.RES ERJ3GEYJ 103 V (10 k) | B | 160.8/36.1 |
| R302 | 7030003560 | S.RES ERJ3GEYJ 103 V (10 k) | B | 160.8/34.3 |
| R303 | 7030003560 | S.RES ERJ3GEYJ 103 V (10 k) | B | 160.8/32.5 |
| R304 | 7030003560 | S.RES ERJ3GEYJ 103 V (10 k) | B | 160.8/30.7 |
| R310 | 7030003200 | S.RES ERJ3GEYJ 100 V (10) | B | 166.1/55.9 |
| R311 | 7030003200 | S.RES ERJ3GEYJ 100 V (10) | B | 163.5/54.1 |
| R312 | 7030003200 | S.RES ERJ3GEYJ 100 V (10) | B | 164.1/52.3 |
| R313 | 7030003200 | S.RES ERJ3GEYJ 100 V (10) | B | 164.1/50.5 |
| R314 | 7030003200 | S.RES ERJ3GEYJ 100 V (10) | B | 164.1/48.7 |
| R315 | 7030003200 | S.RES ERJ3GEYJ 100 V (10) | B | 164.1/46.9 |
| R316 | 7030003200 | S.RES ERJ3GEYJ 100 V (10) | B | 164.1/45.1 |
| R317 | 7030003200 | S.RES ERJ3GEYJ 100 V (10) | B | 164.1/43.3 |
| R318 | 7030003560 | S.RES ERJ3GEYJ 103 V (10 k) | B | 162.1/55.9 |
| R319 | 7030003560 | S.RES ERJ3GEYJ 103 V (10 k) | B | 160.2/54.1 |
| R320 | 7030003560 | S.RES ERJ3GEYJ 103 V (10 k) | B | 160.8/52.3 |
| R321 | 7030003560 | S.RES ERJ3GEYJ 103 V (10 k) | B | 160.8/50.5 |
| R322 | 7030003560 | S.RES ERJ3GEYJ 103 V (10 k) | B | 160.8/48.7 |
| R323 | 7030003560 | S.RES ERJ3GEYJ 103 V (10 k) | B | 160.8/46.9 |
| R324 | 7030003560 | S.RES ERJ3GEYJ 103 V (10 k) | B | 160.8/45.1 |
| R325 | 7030003560 | S.RES ERJ3GEYJ 103 V (10 k) | B | 160.8/43.3 |
| R330 | 7030009891 | S.RES ERA3YED 151V (150) | T | 155/65.5 |
| R331 | 7030009851 | S.RES ERA3YED 271V (270) | T | 152.4/65.5 |
| R341 | 7030003520 | S.RES ERJ3GEYJ 472 V (4.7 k) | B | 199.8/27.5 |
| R342 | 7030004050 | S.RES ERJ3GEYJ 1R0 V (1) | T | 214.6/28.5 |
| R351 | 7030003680 | S.RES ERJ3GEYJ 104 V (100 k) | T | 129.6/81.6 |
| R352 | 7030003640 | S.RES ERJ3GEYJ 473 V (47 k) | T | 132.5/83.2 |
| R353 | 7030003560 | S.RES ERJ3GEYJ 103 V (10 k) | T | 134.7/83.7 |
| R361 | 7030003520 | S.RES ERJ3GEYJ 472 V (4.7 k) | B | 144.7/26.2 |
| R362 | 7030004050 | S.RES ERJ3GEYJ 1R0 V (1) | T | 157.7/16.5 |
| R381 | 7030004050 | S.RES ERJ3GEYJ 1R0 V (1) | T | 93.7/50.7 |
| R397 | 7030003410 | S.RES ERJ3GEYJ 561 V (560) | B | 108.3/36.7 |
| R398 | 7030007860 | S.RES ERJ3GEYJ 8R2V (8.2) | B | 110.2/38.7 |
| R399 | 7030003410 | S.RES ERJ3GEYJ 561 V (560) | B | 108.3/39.6 |
| R400 | 7030003360 | S.RES ERJ3GEYJ 221 V (220) | T | 228.3/9.9 |
| R401 | 7030003360 | S.RES ERJ3GEYJ 221 V (220) | B | 227.3/9.9 |
| R402 | 7030003360 | S.RES ERJ3GEYJ 221 V (220) | T | 226.3/9.9 |
| R403 | 7030003360 | S.RES ERJ3GEYJ 221 V (220) | T | 28.3/9.9 |
| R404 | 7030003360 | S.RES ERJ3GEYJ 221 V (220) | T | 27/9.9 |
| R405 | 7030003360 | S.RES ERJ3GEYJ 221 V (220) | T | 25.7/9.9 |
| R410 | 7030003320 | S.RES ERJ3GEYJ 101 V (100) | T | 9.9/56 |
| R413 | 7030003320 | S.RES ERJ3GEYJ 101 V (100) | B | 9.9/53 |
| R414 | 7030003320 | S.RES ERJ3GEYJ 101 V (100) | T | 9.9/52 |
| R415 | 7030003320 | S.RES ERJ3GEYJ 101 V (100) | B | 9.9/51 |
| R416 | 7030003320 | S.RES ERJ3GEYJ 101 V (100) | T | 9.9/50 |
| R417 | 7030003320 | S.RES ERJ3GEYJ 101 V (100) | B | 9.9/47 |
| R418 | 7030003320 | S.RES ERJ3GEYJ 101 V (100) | T | 9.9/46 |
| R419 | 7030003320 | S.RES ERJ3GEYJ 101 V (100) | B | 9.9/45 |
| R420 | 7030003320 | S.RES ERJ3GEYJ 101 V (100) | T | 9.9/44 |
| R421 | 7030003320 | S.RES ERJ3GEYJ 101 V (100) | B | 9.9/43 |
| R422 | 7030003320 | S.RES ERJ3GEYJ 101 V (100) | T | 9.9/32 |
| R423 | 7030003320 | S.RES ERJ3GEYJ 101 V (100) | T | 9.9/30 |
| R424 | 7030003320 | S.RES ERJ3GEYJ 101 V (100) | B | 9.9/29 |
| R450 | 7030003600 | S.RES ERJ3GEYJ 223 V (22 k) | B | 205.8/28 |
| R451 | 7030003600 | S.RES ERJ3GEYJ 223 V (22 k) | B | 166.9/18.4 |
| R452 | 7030003600 | S.RES ERJ3GEYJ 223 V (22 k) | B | 94.3/43.7 |
| R460 | 7030003560 | S.RES ERJ3GEYJ 103 V (10 k) | B | 144.4/79.4 |
| R461 | 7030003560 | S.RES ERJ3GEYJ 103 V (10 k) | B | 144.1/73.6 |
| R462 | 7030003580 | S.RES ERJ3GEYJ 153 V (15 k) | T | 79.1/23.3 |
| R463 | 7030003560 | S.RES ERJ3GEYJ 103 V (10 k) | T | 158.6/71.4 |
| R466 | 7030003440 | S.RES ERJ3GEYJ 102 V (1 k) | T | 73.7/22.2 |

## [MAIN UNIT]

| REF NO. | ORDER NO. | DESCRIPTION | M. | H/V LOCATION |
|---|---|---|---|---|
| R467 | 7030003320 | S.RES ERJ3GEYJ 101 V (100) | B | 148.2/73.6 |
| R468 | 7030003620 | S.RES ERJ3GEYJ 333 V (33 k) | T | 142.2/77.4 |
| R469 | 7030003520 | S.RES ERJ3GEYJ 472 V (4.7 k) | T | 143/75.7 |
| R470 | 7030003620 | S.RES ERJ3GEYJ 333 V (33 k) | T | 165.9/78.4 |
| R471 | 7030003440 | S.RES ERJ3GEYJ 102 V (1 k) | T | 152.2/67.8 |
| R472 | 7030003640 | S.RES ERJ3GEYJ 473 V (47 k) | T | 165.9/77.1 |
| R474 | 7030003600 | S.RES ERJ3GEYJ 223 V (22 k) | T | 132.5/75.3 |
| R476 | 7030003760 | S.RES ERJ3GEYJ 474 V (470 k) | T | 126.5/77.5 |
| R479 | 7030003550 | S.RES ERJ3GEYJ 822 V (8.2 k) | B | 170.5/73.6 |
| R481 | 7030003860 | S.RES ERJ3GE JPW V | B | 170.5/70.8 |
| R482 | 7030000010 | S.RES MCR10EZHJ JPW | B | 108.8/46 |
| R483 | 7030000010 | S.RES MCR10EZHJ JPW | B | 206.6/18.3 |
| R484 | 7030000010 | S.RES MCR10EZHJ JPW | B | 151.6/27.6 |
| R485 | 7030003860 | S.RES ERJ3GE JPW V | T | 9.9/48 |
| R486 | 7030003860 | S.RES ERJ3GE JPW V | B | 9.9/49 |
| R487 | 7030000010 | S.RES MCR10EZHJ JPW | T | 9.9/58.1 |
| R488 | 7030003860 | S.RES ERJ3GE JPW V | B | 111.4/76.2 |
| R489 | 7030003500 | S.RES ERJ3GEYJ 332 V (3.3 k) | B | 229/6 |
| R490 | 7030003440 | S.RES ERJ3GEYJ 102 V (1 k) | B | 159.4/63.3 |
| R491 | 7030003560 | S.RES ERJ3GEYJ 103 V (10 k) | B | 157.7/59.6 |
| R492 | 7030003560 | S.RES ERJ3GEYJ 103 V (10 k) | B | 159.5/59.6 |
| R493 | 7030003410 | S.RES ERJ3GEYJ 561 V (560) | T | 130.7/103 |
| R494 | 7030005331 | S.RES ERA3YED 562V (5.6 k) | T | 218.4/78.6 |
| R495 | 7030010480 | S.RES ERJ1TYJ 181U (180) | T | 212.4/2.3 |
| R496 | 7030005331 | S.RES ERA3YED 562V (5.6 k) | T | 218.4/77.3 |
| R497 | 7030007911 | S.RES ERA3YKD 563V (56 k) | B | 228.6/16.1 |
| R498 | 7030005631 | S.RES ERA3YKD 154V (150 k) | B | 228.6/20.2 |
| R499 | 7030005631 | S.RES ERA3YKD 154V (150 k) | B | 230.4/20.2 |
| R501 | 7030003440 | S.RES ERJ3GEYJ 102 V (1 k) | T | 20.7/58.3 |
| R502 | 7030003560 | S.RES ERJ3GEYJ 103 V (10 k) | T | 19.2/60.9 |
| R503 | 7030003440 | S.RES ERJ3GEYJ 102 V (1 k) | T | 22.2/58.3 |
| R504 | 7030003440 | S.RES ERJ3GEYJ 102 V (1 k) | T | 23.7/60.9 |
| R505 | 7030003320 | S.RES ERJ3GEYJ 101 V (100) | T | 26/61.7 |
| R506 | 7030003320 | S.RES ERJ3GEYJ 101 V (100) | T | 16.1/70.6 |
| R507 | 7030003440 | S.RES ERJ3GEYJ 102 V (1 k) | T | 22.2/72.4 |
| R508 | 7030003440 | S.RES ERJ3GEYJ 102 V (1 k) | T | 23.7/72.4 |
| R509 | 7030003320 | S.RES ERJ3GEYJ 101 V (100) | T | 26.7/72.4 |
| R510 | 7030003320 | S.RES ERJ3GEYJ 101 V (100) | T | 19.2/81.2 |
| R511 | 7030003320 | S.RES ERJ3GEYJ 101 V (100) | T | 21.4/87.5 |
| R512 | 7030003650 | S.RES ERJ3GEYJ 563 V (56 k) | B | 228.2/3.1 |
| R513 | 7030003860 | S.RES ERJ3GE JPW V | T | 103.9/68.7 |
| R514 | 7030003440 | S.RES ERJ3GEYJ 102 V (1 k) | T | 19.2/96.4 |
| R515 | 7030003410 | S.RES ERJ3GEYJ 561 V (560) | T | 26.6/96.4 |
| R516 | 7030003440 | S.RES ERJ3GEYJ 102 V (1 k) | T | 25.3/84.6 |
| R517 | 7030003520 | S.RES ERJ3GEYJ 472 V (4.7 k) | T | 23.2/84.6 |
| R518 | 7030003400 | S.RES ERJ3GEYJ 471 V (470) | B | 20.1/91.9 |
| R519 | 7030003560 | S.RES ERJ3GEYJ 103 V (10 k) | B | 20.1/89 |
| R520 | 7030003630 | S.RES ERJ3GEYJ 393 V (39 k) | B | 24.3/91.9 |
| R521 | 7030003600 | S.RES ERJ3GEYJ 223 V (22 k) | B | 24.3/87.7 |
| R522 | 7030003200 | S.RES ERJ3GEYJ 100 V (10) | B | 230.4/24.8 |
| R523 | 7030003360 | S.RES ERJ3GEYJ 221 V (220) | B | 27.9/87.7 |
| R524 | 7030003560 | S.RES ERJ3GEYJ 103 V (10 k) | B | 27.1/93.9 |
| R525 | 7030003480 | S.RES ERJ3GEYJ 222 V (2.2 k) | B | 31.3/91.9 |
| R526 | 7030003440 | S.RES ERJ3GEYJ 102 V (1 k) | B | 31.3/98.2 |
| R527 | 7030003560 | S.RES ERJ3GEYJ 103 V (10 k) | B | 31.3/94.9 |
| R528 | 7030003560 | S.RES ERJ3GEYJ 103 V (10 k) | B | 34.3/96.2 |
| R529 | 7030003560 | S.RES ERJ3GEYJ 103 V (10 k) | B | 34.3/89.7 |
| R530 | 7030003560 | S.RES ERJ3GEYJ 103 V (10 k) | B | 48.1/95.1 |
| R531 | 7030003560 | S.RES ERJ3GEYJ 103 V (10 k) | B | 48.1/82 |
| R532 | 7030003440 | S.RES ERJ3GEYJ 102 V (1 k) | B | 40.9/91.4 |
| R533 | 7030003560 | S.RES ERJ3GEYJ 103 V (10 k) | B | 44.5/91.4 |
| R534 | 7030003560 | S.RES ERJ3GEYJ 103 V (10 k) | T | 49.1/79.5 |
| R535 | 7030003440 | S.RES ERJ3GEYJ 102 V (1 k) | B | 49.9/82 |
| R536 | 7030003490 | S.RES ERJ3GEYJ 272 V (2.7 k) | B | 48.7/85.7 |
| R537 | 7030003320 | S.RES ERJ3GEYJ 101 V (100) | T | 53.5/84.4 |
| R538 | 7310005040 | S.TRI RH03ADCJ4X (22 k) | T | 49.3/90.7 |
| R539 | 7030003400 | S.RES ERJ3GEYJ 471 V (470) | B | 51.7/95.1 |
| R540 | 7030003220 | S.RES ERJ3GEYJ 150 V (15) | B | 66.4/96.1 |
| R541 | 7030003380 | S.RES ERJ3GEYJ 331 V (330) | B | 64.3/96.9 |
| R543 | 7030003380 | S.RES ERJ3GEYJ 331 V (330) | B | 64.3/95.3 |
| R544 | 7030005671 | S.RES ERA3YKD 393V (39 k) | B | 229.4/17.7 |
| R545 | 7030004030 | S.RES ERJ3GEYJ 5R6 V (5.6) | B | 59.9/93.8 |
| R546 | 7030003430 | S.RES ERJ3GEYJ 821 V (820) | B | 58.7/90.7 |
| R547 | 7030003430 | S.RES ERJ3GEYJ 821 V (820) | B | 61.1/90.7 |
| R548 | 7030004030 | S.RES ERJ3GEYJ 5R6 V (5.6) | B | 80.6/93.8 |
| R549 | 7030003560 | S.RES ERJ3GEYJ 103 V (10 k) | T | 129.5/104.6 |
| R550 | 7030003560 | S.RES ERJ3GEYJ 103 V (10 k) | T | 132.8/106.5 |
| R551 | 7030003680 | S.RES ERJ3GEYJ 104 V (100 k) | T | 188.5/106.1 |
| R552 | 7030004040 | S.RES ERJ3GEYJ 4R7 V (4.7) | B | 101.6/88.7 |
| R553 | 7030009891 | S.RES ERA3YED 151V (150) | B | 108.3/85.2 |
| R554 | 7030003440 | S.RES ERJ3GEYJ 102 V (1 k) | B | 105.6/85.2 |
| R555 | 7510001491 | S.TMR NTCG16 3NH 681JT | B | 103.8/78 |
| R556 | 7030003480 | S.RES ERJ3GEYJ 222 V (2.2 k) | B | 103.8/80.6 |
| R557 | 7030005331 | S.RES ERA3YED 562V (5.6 k) | B | 229.4/23 |
| R558 | 7030003320 | S.RES ERJ3GEYJ 101 V (100) | B | 102.9/74.8 |
| R559 | 7030003680 | S.RES ERJ3GEYJ 104 V (100 k) | T | 132.8/105.2 |
| R560 | 7030003680 | S.RES ERJ3GEYJ 104 V (100 k) | T | 188.5/103.4 |
| R561 | 7030003680 | S.RES ERJ3GEYJ 104 V (100 k) | T | 133.6/102.4 |
| R562 | 7030003320 | S.RES ERJ3GEYJ 101 V (100) | B | 77.5/69.5 |
| R563 | 7030003300 | S.RES ERJ3GEYJ 680 V (68) | T | 110/62.7 |
| R564 | 7030003620 | S.RES ERJ3GEYJ 333 V (33 k) | T | 107.1/64.2 |
| R565 | 7030003640 | S.RES ERJ3GEYJ 473 V (47 k) | B | 234.6/4.6 |

M.=Mounted side (T: Mounted on the Top side, B: Mounted on the Bottom side)
S.=Surface mount

## [MAIN UNIT]

| REF NO. | ORDER NO. | DESCRIPTION | M. | H/V LOCATION |
|---|---|---|---|---|
| R566 | 7030003330 | S.RES ERJ3GEYJ 121 V (120) | T | 102.8/74.1 |
| R567 | 7030003230 | S.RES ERJ3GEYJ 180 V (18) | B | 91.4/67.6 |
| R568 | 7030009851 | S.RES ERA3YED 271V (270) | B | 93.4/66.8 |
| R569 | 7030009851 | S.RES ERA3YED 271V (270) | B | 89.3/66.8 |
| R570 | 7030003520 | S.RES ERJ3GEYJ 472 V (4.7 k) | T | 59.8/60.7 |
| R571 | 7030003560 | S.RES ERJ3GEYJ 103 V (10 k) | B | 64.5/59.2 |
| R572 | 7030004040 | S.RES ERJ3GEYJ 4R7 V (4.7) | T | 61.5/68.2 |
| R573 | 7030003400 | S.RES ERJ3GEYJ 471 V (470) | B | 68.2/59.2 |
| R574 | 7030003280 | S.RES ERJ3GEYJ 470 V (47) | T | 69.8/63.8 |
| R575 | 7030009851 | S.RES ERA3YED 271V (270) | B | 56.7/59.3 |
| R576 | 7030003230 | S.RES ERJ3GEYJ 180 V (18) | B | 54.6/58.5 |
| R577 | 7030009851 | S.RES ERA3YED 271V (270) | B | 56.7/57.7 |
| R578 | 7030003230 | S.RES ERJ3GEYJ 180 V (18) | B | 61.6/72 |
| R579 | 7030009851 | S.RES ERA3YED 271V (270) | B | 57.9/72.8 |
| R580 | 7030009851 | S.RES ERA3YED 271V (270) | B | 57.9/71 |
| R581 | 7030003430 | S.RES ERJ3GEYJ 821 V (820) | B | 92.6/72.9 |
| R582 | 7030004030 | S.RES ERJ3GEYJ 5R6 V (5.6) | B | 91.8/70.9 |
| R583 | 7030003430 | S.RES ERJ3GEYJ 821 V (820) | B | 94.2/70.8 |
| R584 | 7510001671 | S.TMR NTCG16 4BH 103JT | T | 218.4/79.9 |
| R585 | 7030003600 | S.RES ERJ3GEYJ 223 V (22 k) | B | 25/89.8 |
| R587 | 7030003200 | S.RES ERJ3GEYJ 100 V (10) | B | 61.5/68.1 |
| R589 | 7030003400 | S.RES ERJ3GEYJ 471 V (470) | B | 64.5/63.7 |
| R590 | 7030003430 | S.RES ERJ3GEYJ 821 V (820) | B | 79.8/91.7 |
| R591 | 7030003430 | S.RES ERJ3GEYJ 821 V (820) | B | 81.5/91.7 |
| R592 | 7030000300 | S.RES MCR10EZHJ 220 | B | 59.4/61.8 |
| R601 | 7030000260 | S.RES MCR10EZHJ 100 | B | 42.7/43.5 |
| R602 | 7030000260 | S.RES MCR10EZHJ 100 | B | 53.5/43.5 |
| R603 | 7030000260 | S.RES MCR10EZHJ 100 | B | 64.3/43.5 |
| R604 | 7030000260 | S.RES MCR10EZHJ 100 | B | 75.2/43.5 |
| R605 | 7030000260 | S.RES MCR10EZHJ 100 | B | 86/43.5 |
| R606 | 7030000260 | S.RES MCR10EZHJ 100 | T | 34.3/43.5 |
| R607 | 7030000260 | S.RES MCR10EZHJ 100 | T | 43.3/43.5 |
| R608 | 7030000260 | S.RES MCR10EZHJ 100 | T | 52.3/43.5 |
| R609 | 7030000260 | S.RES MCR10EZHJ 100 | T | 61.3/43.5 |
| R610 | 7030003400 | S.RES ERJ3GEYJ 471 V (470) | T | 79.8/54 |
| R611 | 7030000260 | S.RES MCR10EZHJ 100 | T | 70.3/43.5 |
| R612 | 7030009851 | S.RES ERA3YED 271V (270) | T | 44/54 |
| R613 | 7030003230 | S.RES ERJ3GEYJ 180 V (18) | T | 46.2/53.3 |
| R614 | 7030009851 | S.RES ERA3YED 271V (270) | T | 44/52.7 |
| R801 | 7030003380 | S.RES ERJ3GEYJ 331 V (330) | T | 37.2/26.2 |
| R802 | 7030009891 | S.RES ERA3YED 151V (150) | B | 37.2/18.7 |
| R803 | 7030003440 | S.RES ERJ3GEYJ 102 V (1 k) | B | 49.7/21 |
| R804 | 7030003490 | S.RES ERJ3GEYJ 272 V (2.7 k) | B | 47.8/21.7 |
| R805 | 7030003300 | S.RES ERJ3GEYJ 680 V (68) | T | 57.6/18.7 |
| R806 | 7030003320 | S.RES ERJ3GEYJ 101 V (100) | T | 56.2/18.7 |
| R807 | 7030003320 | S.RES ERJ3GEYJ 101 V (100) | T | 56.9/16.5 |
| R808 | 7030003640 | S.RES ERJ3GEYJ 473 V (47 k) | B | 89.9/87.6 |
| R809 | 7030003460 | S.RES ERJ3GEYJ 152 V (1.5 k) | B | 84.7/87.6 |
| R810 | 7030003680 | S.RES ERJ3GEYJ 104 V (100 k) | T | 34/22.3 |
| R811 | 7030003560 | S.RES ERJ3GEYJ 103 V (10 k) | T | 30.8/19.6 |
| R812 | 7030009851 | S.RES ERA3YED 271V (270) | T | 34/27.5 |
| R813 | 7030003230 | S.RES ERJ3GEYJ 180 V (18) | T | 34/26.2 |
| R814 | 7030009851 | S.RES ERA3YED 271V (270) | T | 34/24.9 |
| R815 | 7030003320 | S.RES ERJ3GEYJ 101 V (100) | T | 31.9/25.5 |
| R816 | 7030003680 | S.RES ERJ3GEYJ 104 V (100 k) | T | 31.2/23.6 |
| R817 | 7030003860 | S.RES ERJ3GE JPW V | T | 52.7/23.9 |
| R818 | 7030003320 | S.RES ERJ3GEYJ 101 V (100) | B | 41.7/21 |
| R820 | 7030003440 | S.RES ERJ3GEYJ 102 V (1 k) | T | 77.7/62.7 |
| R821 | 7030003320 | S.RES ERJ3GEYJ 101 V (100) | T | 88.2/60.9 |
| R822 | 7030003620 | S.RES ERJ3GEYJ 333 V (33 k) | T | 88.2/57.9 |
| R823 | 7030003280 | S.RES ERJ3GEYJ 470 V (47) | T | 83.2/51.5 |
| R824 | 7030003320 | S.RES ERJ3GEYJ 101 V (100) | T | 77/58.6 |
| R825 | 7030003320 | S.RES ERJ3GEYJ 101 V (100) | T | 82.3/33.8 |
| R826 | 7030003230 | S.RES ERJ3GEYJ 180 V (18) | T | 87.2/36.2 |
| R827 | 7030009851 | S.RES ERA3YED 271V (270) | T | 85.2/37 |
| R828 | 7030009851 | S.RES ERA3YED 271V (270) | T | 85.2/35.5 |
| R829 | 7030003400 | S.RES ERJ3GEYJ 471 V (470) | T | 86.5/55.1 |
| R830 | 7030003330 | S.RES ERJ3GEYJ 121 V (120) | T | 86/53.2 |
| R831 | 7030003600 | S.RES ERJ3GEYJ 223 V (22 k) | T | 83.2/54.5 |
| R832 | 7030003290 | S.RES ERJ3GEYJ 560 V (56) | B | 87.3/71.1 |
| R833 | 7030003480 | S.RES ERJ3GEYJ 222 V (2.2 k) | B | 89.4/71.8 |
| R834 | 7030003440 | S.RES ERJ3GEYJ 102 V (1 k) | B | 85.3/79.2 |
| R835 | 7030003440 | S.RES ERJ3GEYJ 102 V (1 k) | B | 83.1/74.2 |
| R836 | 7030003500 | S.RES ERJ3GEYJ 332 V (3.3 k) | B | 83.2/79.1 |
| R837 | 7030003480 | S.RES ERJ3GEYJ 222 V (2.2 k) | T | 29.8/81.6 |
| R838 | 7030003510 | S.RES ERJ3GEYJ 392 V (3.9 k) | T | 33.6/73.8 |
| R839 | 7030003480 | S.RES ERJ3GEYJ 222 V (2.2 k) | T | 38.1/73.4 |
| R840 | 7030003400 | S.RES ERJ3GEYJ 471 V (470) | T | 38.1/72.1 |
| R841 | 7030003300 | S.RES ERJ3GEYJ 680 V (68) | T | 35.3/71.6 |
| R851 | 7030009861 | S.RES ERA3YED 471V (470) | T | 110/87.6 |
| R852 | 7030003560 | S.RES ERJ3GEYJ 103 V (10 k) | T | 37.9/69.8 |
| R900 | 7030003320 | S.RES ERJ3GEYJ 101 V (100) | T | 126.2/5.8 |
| R901 | 7030003320 | S.RES ERJ3GEYJ 101 V (100) | B | 125.2/5.8 |
| R902 | 7030003320 | S.RES ERJ3GEYJ 101 V (100) | T | 124.2/5.8 |
| R903 | 7030003320 | S.RES ERJ3GEYJ 101 V (100) | B | 123.2/5.8 |
| R904 | 7030003320 | S.RES ERJ3GEYJ 101 V (100) | T | 122.2/5.8 |
| R906 | 7030003320 | S.RES ERJ3GEYJ 101 V (100) | T | 120.2/5.8 |
| R908 | 7030003320 | S.RES ERJ3GEYJ 101 V (100) | T | 118.2/5.8 |
| R909 | 7030003320 | S.RES ERJ3GEYJ 101 V (100) | B | 117.2/5.8 |
| R910 | 7030003320 | S.RES ERJ3GEYJ 101 V (100) | T | 116.2/5.8 |
| R911 | 7030003320 | S.RES ERJ3GEYJ 101 V (100) | B | 115.2/5.8 |
| R912 | 7030003320 | S.RES ERJ3GEYJ 101 V (100) | T | 114.2/5.8 |

## [MAIN UNIT]

| REF NO. | ORDER NO. | DESCRIPTION | M. | H/V LOCATION |
|---|---|---|---|---|
| R913 | 7030003320 | S.RES ERJ3GEYJ 101 V (100) | B | 113.2/5.8 |
| R914 | 7030003320 | S.RES ERJ3GEYJ 101 V (100) | T | 112.2/5.8 |
| R915 | 7030003320 | S.RES ERJ3GEYJ 101 V (100) | B | 111.2/5.8 |
| R916 | 7030003320 | S.RES ERJ3GEYJ 101 V (100) | T | 110.2/5.8 |
| R917 | 7030003320 | S.RES ERJ3GEYJ 101 V (100) | B | 109.2/5.8 |
| R918 | 7030003320 | S.RES ERJ3GEYJ 101 V (100) | T | 13.8/119.5 |
| R920 | 7030003320 | S.RES ERJ3GEYJ 101 V (100) | T | 125.7/15.4 |
| R921 | 7030003320 | S.RES ERJ3GEYJ 101 V (100) | B | 124.7/15.4 |
| R922 | 7030003320 | S.RES ERJ3GEYJ 101 V (100) | T | 123.7/15.4 |
| R923 | 7030003320 | S.RES ERJ3GEYJ 101 V (100) | B | 122.7/15.4 |
| R924 | 7030003320 | S.RES ERJ3GEYJ 101 V (100) | T | 121.7/15.4 |
| R925 | 7030003320 | S.RES ERJ3GEYJ 101 V (100) | B | 120.7/15.4 |
| R926 | 7030003320 | S.RES ERJ3GEYJ 101 V (100) | T | 119.7/15.4 |
| R927 | 7030003320 | S.RES ERJ3GEYJ 101 V (100) | B | 118.7/15.4 |
| R928 | 7030003320 | S.RES ERJ3GEYJ 101 V (100) | T | 117.7/15.4 |
| R929 | 7030003320 | S.RES ERJ3GEYJ 101 V (100) | B | 116.7/15.4 |
| R930 | 7030003320 | S.RES ERJ3GEYJ 101 V (100) | T | 115.7/15.4 |
| R932 | 7030003320 | S.RES ERJ3GEYJ 101 V (100) | T | 113.7/15.4 |
| R933 | 7030003320 | S.RES ERJ3GEYJ 101 V (100) | B | 112.7/15.4 |
| R934 | 7030003320 | S.RES ERJ3GEYJ 101 V (100) | T | 111.7/15.4 |
| R936 | 7030003320 | S.RES ERJ3GEYJ 101 V (100) | T | 109.7/15.4 |
| R937 | 7030003320 | S.RES ERJ3GEYJ 101 V (100) | B | 108.7/15.4 |
| R938 | 7030003320 | S.RES ERJ3GEYJ 101 V (100) | T | 12.5/119.5 |
| R940 | 7030003320 | S.RES ERJ3GEYJ 101 V (100) | T | 94.3/5.8 |
| R941 | 7030003320 | S.RES ERJ3GEYJ 101 V (100) | B | 93.3/5.8 |
| R942 | 7030003320 | S.RES ERJ3GEYJ 101 V (100) | T | 92.3/5.8 |
| R943 | 7030003320 | S.RES ERJ3GEYJ 101 V (100) | B | 91.3/5.8 |
| R944 | 7030003320 | S.RES ERJ3GEYJ 101 V (100) | T | 90.3/5.8 |
| R945 | 7030003320 | S.RES ERJ3GEYJ 101 V (100) | B | 89.3/5.8 |
| R946 | 7030003320 | S.RES ERJ3GEYJ 101 V (100) | T | 88.3/5.8 |
| R947 | 7030003320 | S.RES ERJ3GEYJ 101 V (100) | B | 87.3/5.8 |
| R948 | 7030003320 | S.RES ERJ3GEYJ 101 V (100) | T | 86.3/5.8 |
| R949 | 7030003320 | S.RES ERJ3GEYJ 101 V (100) | B | 85.3/5.8 |
| R950 | 7030003320 | S.RES ERJ3GEYJ 101 V (100) | T | 84.3/5.8 |
| R951 | 7030003320 | S.RES ERJ3GEYJ 101 V (100) | B | 83.3/5.8 |
| R952 | 7030003320 | S.RES ERJ3GEYJ 101 V (100) | T | 82.3/5.8 |
| R953 | 7030003320 | S.RES ERJ3GEYJ 101 V (100) | B | 81.3/5.8 |
| R954 | 7030003320 | S.RES ERJ3GEYJ 101 V (100) | T | 80.3/5.8 |
| R955 | 7030003320 | S.RES ERJ3GEYJ 101 V (100) | B | 79.3/5.8 |
| R957 | 7030003320 | S.RES ERJ3GEYJ 101 V (100) | B | 77.3/5.8 |
| R958 | 7030003320 | S.RES ERJ3GEYJ 101 V (100) | T | 76.3/5.8 |
| R960 | 7030003320 | S.RES ERJ3GEYJ 101 V (100) | T | 93.8/15.3 |
| R961 | 7030003320 | S.RES ERJ3GEYJ 101 V (100) | B | 92.8/15.4 |
| R962 | 7030003320 | S.RES ERJ3GEYJ 101 V (100) | T | 91.8/15.3 |
| R963 | 7030003320 | S.RES ERJ3GEYJ 101 V (100) | B | 90.8/15.4 |
| R964 | 7030003320 | S.RES ERJ3GEYJ 101 V (100) | T | 89.8/15.3 |
| R966 | 7030003320 | S.RES ERJ3GEYJ 101 V (100) | T | 87.8/15.3 |
| R967 | 7030003320 | S.RES ERJ3GEYJ 101 V (100) | B | 86.8/15.4 |
| R968 | 7030003320 | S.RES ERJ3GEYJ 101 V (100) | T | 85.8/15.3 |
| R969 | 7030003320 | S.RES ERJ3GEYJ 101 V (100) | B | 84.8/15.4 |
| R970 | 7030003320 | S.RES ERJ3GEYJ 101 V (100) | T | 83.8/15.3 |
| R971 | 7030003320 | S.RES ERJ3GEYJ 101 V (100) | B | 82.8/15.4 |
| R972 | 7030003320 | S.RES ERJ3GEYJ 101 V (100) | T | 81.8/15.4 |
| R973 | 7030003320 | S.RES ERJ3GEYJ 101 V (100) | B | 80.8/15.4 |
| R974 | 7030003320 | S.RES ERJ3GEYJ 101 V (100) | T | 79.8/15.4 |
| R975 | 7030003320 | S.RES ERJ3GEYJ 101 V (100) | B | 78.8/15.4 |
| R976 | 7030003320 | S.RES ERJ3GEYJ 101 V (100) | T | 77.8/15.4 |
| R977 | 7030003320 | S.RES ERJ3GEYJ 101 V (100) | B | 76.8/15.4 |
| R978 | 7030003320 | S.RES ERJ3GEYJ 101 V (100) | T | 75.8/15.4 |
| R979 | 7030003320 | S.RES ERJ3GEYJ 101 V (100) | B | 74.8/15.4 |
| | | | | |
| C1 | 4030006880 | S.CER C1608 JB 1H 472K-T | B | 207.5/109.2 |
| C2 | 4030006880 | S.CER C1608 JB 1H 472K-T | T | 225.7/110.3 |
| C3 | 4030006880 | S.CER C1608 JB 1H 472K-T | B | 220.4/106.6 |
| C4 | 4030006880 | S.CER C1608 JB 1H 472K-T | T | 204.7/110.3 |
| C5 | 4030006880 | S.CER C1608 JB 1H 472K-T | T | 222.2/110.3 |
| C6 | 4030006880 | S.CER C1608 JB 1H 472K-T | T | 211.7/110.3 |
| C7 | 4030006880 | S.CER C1608 JB 1H 472K-T | T | 215.2/110.3 |
| C8 | 4030006880 | S.CER C1608 JB 1H 472K-T | T | 200.4/110.3 |
| C9 | 4030006880 | S.CER C1608 JB 1H 472K-T | T | 193.4/110.3 |
| C10 | 4030006880 | S.CER C1608 JB 1H 472K-T | T | 196.9/110.3 |
| C11 | 4030006880 | S.CER C1608 JB 1H 472K-T | B | 168/106.8 |
| C12 | 4030006880 | S.CER C1608 JB 1H 472K-T | T | 183.7/110.3 |
| C13 | 4030006880 | S.CER C1608 JB 1H 472K-T | B | 178.4/106.6 |
| C14 | 4030006880 | S.CER C1608 JB 1H 472K-T | T | 162.7/110.3 |
| C15 | 4030006880 | S.CER C1608 JB 1H 472K-T | T | 180.2/110.3 |
| C16 | 4030006880 | S.CER C1608 JB 1H 472K-T | T | 169.7/110.3 |
| C17 | 4030006880 | S.CER C1608 JB 1H 472K-T | T | 173.2/110.3 |
| C18 | 4030006880 | S.CER C1608 JB 1H 472K-T | T | 158.4/110.3 |
| C19 | 4030006880 | S.CER C1608 JB 1H 472K-T | T | 151.4/110.3 |
| C20 | 4030006880 | S.CER C1608 JB 1H 472K-T | T | 154.9/110.3 |
| C21 | 4030006880 | S.CER C1608 JB 1H 472K-T | B | 163.9/96.8 |
| C22 | 4030006880 | S.CER C1608 JB 1H 472K-T | B | 174.7/98 |
| C23 | 4030006880 | S.CER C1608 JB 1H 472K-T | B | 167.1/98.1 |
| C24 | 4030006880 | S.CER C1608 JB 1H 472K-T | B | 145.1/106.9 |
| C25 | 4510008540 | S.ELE EEE1CA100SR | T | 218.3/83.6 |
| C26 | 4510008540 | S.ELE EEE1CA100SR | T | 233.7/83.5 |
| C28 | 4510008540 | S.ELE EEE1CA100SR | T | 191.1/80.5 |
| C29 | 4510008540 | S.ELE EEE1CA100SR | T | 184.9/80.5 |
| C30 | 4510008540 | S.ELE EEE1CA100SR | T | 184.2/92.3 |
| C31 | 4030011600 | S.CER C1608 JB 1E 104K-T | T | 187.7/74.5 |

M.=Mounted side (T: Mounted on the Top side, B: Mounted on the Bottom side)
S.=Surface mount

## [MAIN UNIT]

| REF NO. | ORDER NO. | DESCRIPTION | M. | H/V LOCATION |
|---|---|---|---|---|
| C32 | 4510008540 | S.ELE EEE1CA100SR | T | 179/82.1 |
| C33 | 4510008540 | S.ELE EEE1CA100SR | T | 178.9/87 |
| C34 | 4030012600 | S.CER C2012 JB 1A 105M-T | T | 189/92.3 |
| C35 | 4030012600 | S.CER C2012 JB 1A 105M-T | T | 179.4/92.4 |
| C36 | 4510008500 | S.ELE EEE1CA101WP | T | 222.1/104.5 |
| C37 | 4510008540 | S.ELE EEE1CA100SR | T | 229.5/107.3 |
| C38 | 4510008500 | S.ELE EEE1CA101WP | T | 174.3/104.1 |
| C39 | 4510008540 | S.ELE EEE1CA100SR | T | 181.9/104.7 |
| C40 | 4510008540 | S.ELE EEE1CA100SR | T | 190/63.4 |
| C41 | 4510008540 | S.ELE EEE1CA100SR | T | 184/63.4 |
| C42 | 4030011600 | S.CER C1608 JB 1E 104K-T | T | 187.7/77.1 |
| C43 | 4030011600 | S.CER C1608 JB 1E 104K-T | T | 194.5/74.5 |
| C44 | 4030011600 | S.CER C1608 JB 1E 104K-T | T | 180.9/77.1 |
| C45 | 4030012600 | S.CER C2012 JB 1A 105M-T | T | 193.3/83.8 |
| C46 | 4030012600 | S.CER C2012 JB 1A 105M-T | T | 193.3/90.9 |
| C50 | 4030006880 | S.CER C1608 JB 1H 472K-T | B | 139.6/118.5 |
| C51 | 4010005380 | CER HM13SJ YB 472K 500V | | |
| C52 | 4030006880 | S.CER C1608 JB 1H 472K-T | B | 114.5/98.6 |
| C53 | 4030006880 | S.CER C1608 JB 1H 472K-T | B | 116.2/96.3 |
| C54 | 4030006880 | S.CER C1608 JB 1H 472K-T | B | 79.9/123.6 |
| C55 | 4030006880 | S.CER C1608 JB 1H 472K-T | B | 79.9/118.7 |
| C56 | 4030006880 | S.CER C1608 JB 1H 472K-T | B | 92.8/106.5 |
| C57 | 4030010760 | S.CER C1608 CH 1H 331J-T | T | 179.5/70.9 |
| C58 | 4030010760 | S.CER C1608 CH 1H 331J-T | T | 194.6/70.7 |
| C61 | 4030012600 | S.CER C2012 JB 1A 105M-T | T | 119.1/77.8 |
| C62 | 4030012600 | S.CER C2012 JB 1A 105M-T | T | 119.1/76 |
| C65 | 4030012600 | S.CER C2012 JB 1A 105M-T | B | 108.1/76.2 |
| C68 | 4030006860 | S.CER C1608 JB 1H 102K-T | B | 126.4/101.9 |
| C69 | 4030011600 | S.CER C1608 JB 1E 104K-T | T | 121.5/90.8 |
| C70 | 4030011600 | S.CER C1608 JB 1E 104K-T | B | 122.1/89.4 |
| C71 | 4030011600 | S.CER C1608 JB 1E 104K-T | B | 136.8/96.8 |
| C80 | 4030007130 | S.CER C1608 CH 1H 101J-T | B | 59.2/122.2 |
| C100 | 4030011600 | S.CER C1608 JB 1E 104K-T | B | 208.4/91 |
| C101 | 4030011600 | S.CER C1608 JB 1E 104K-T | T | 213.4/87.4 |
| C103 | 4510008550 | S.ELE EEE1HA010SR | T | 210.7/83.6 |
| C105 | 4030011600 | S.CER C1608 JB 1E 104K-T | B | 201.6/91 |
| C106 | 4030011600 | S.CER C1608 JB 1E 104K-T | T | 206.6/87.4 |
| C108 | 4510008550 | S.ELE EEE1HA010SR | T | 202.9/83.6 |
| C110 | 4510008540 | S.ELE EEE1CA100SR | T | 209.8/63.3 |
| C113 | 4510008540 | S.ELE EEE1CA100SR | T | 209.8/73.8 |
| C115 | 4510008540 | S.ELE EEE1CA100SR | T | 209.8/48.7 |
| C116 | 4510008540 | S.ELE EEE1CA100SR | T | 209.8/38.1 |
| C117 | 4510009120 | S.ELE EEE1VA2R2NR | T | 215.7/73.8 |
| C118 | 4510009120 | S.ELE EEE1VA2R2NR | T | 203.9/73.8 |
| C120 | 4510008540 | S.ELE EEE1CA100SR | T | 223.6/50.7 |
| C121 | 4510008540 | S.ELE EEE1CA100SR | T | 214.3/58 |
| C122 | 4510008540 | S.ELE EEE1CA100SR | T | 204.7/58 |
| C123 | 4510008550 | S.ELE EEE1HA010SR | T | 227/56.1 |
| C124 | 4510008550 | S.ELE EEE1HA010SR | T | 227.1/60.9 |
| C125 | 4510008540 | S.ELE EEE1CA100SR | T | 218.8/67 |
| C126 | 4510008540 | S.ELE EEE1CA100SR | T | 223.6/67 |
| C127 | 4510008550 | S.ELE EEE1HA010SR | T | 234.1/60.9 |
| C128 | 4510008550 | S.ELE EEE1HA010SR | T | 233.3/56.1 |
| C129 | 4030008650 | S.CER C1608 JB 1H 332K-T | T | 215.6/67.3 |
| C130 | 4030008650 | S.CER C1608 JB 1H 332K-T | T | 203.8/67.3 |
| C131 | 4030012600 | S.CER C2012 JB 1A 105M-T | T | 220.3/52 |
| C132 | 4030012600 | S.CER C2012 JB 1A 105M-T | T | 218.5/52 |
| C133 | 4030008880 | S.CER C1608 JB 1H 223K-T | T | 232.2/66.6 |
| C134 | 4030008950 | S.CER C2012 JB 1C 823K-T | T | 231.3/69 |
| C135 | 4030008880 | S.CER C1608 JB 1H 223K-T | T | 234.1/52.3 |
| C136 | 4030008950 | S.CER C2012 JB 1C 823K-T | T | 232.4/50.1 |
| C140 | 4510008550 | S.ELE EEE1HA010SR | T | 249.6/35.6 |
| C141 | 4510008190 | ELE EEUFC1E222S | | |
| C142 | 4510009080 | S.ELE EEE1HAR22SR | T | 253.9/59.1 |
| C143 | 4510008500 | S.ELE EEE1CA101WP | T | 253.3/67.9 |
| C144 | 4510008180 | ELE EEUFC1E102S | | |
| C145 | 4510008180 | ELE EEUFC1E102S | | |
| C146 | 4030011600 | S.CER C1608 JB 1E 104K-T | B | 252.2/101.3 |
| C147 | 4030011600 | S.CER C1608 JB 1E 104K-T | B | 242.4/107.8 |
| C148 | 4030006880 | S.CER C1608 JB 1H 472K-T | B | 247.8/97.2 |
| C149 | 4030006880 | S.CER C1608 JB 1H 472K-T | B | 252.2/95.4 |
| C150 | 4030006880 | S.CER C1608 JB 1H 472K-T | B | 239.9/97.2 |
| C151 | 4030011600 | S.CER C1608 JB 1E 104K-T | T | 228.6/73.1 |
| C152 | 4030011600 | S.CER C1608 JB 1E 104K-T | T | 233.4/45.5 |
| C180 | 4510009010 | S.ELE EEE1AA221P | T | 188.5/50.4 |
| C181 | 4510008540 | S.ELE EEE1CA100SR | T | 209.5/58 |
| C182 | 4510008540 | S.ELE EEE1CA100SR | T | 199.9/58 |
| C183 | 4510008540 | S.ELE EEE1CA100SR | T | 194.4/57.3 |
| C184 | 4510008540 | S.ELE EEE1CA100SR | T | 195.8/52.5 |
| C185 | 4510008540 | S.ELE EEE1CA100SR | T | 195.8/47.7 |
| C186 | 4510008540 | S.ELE EEE1CA100SR | T | 180.2/50.5 |
| C187 | 4030011600 | S.CER C1608 JB 1E 104K-T | T | 183.3/39.5 |
| C188 | 4510008540 | S.ELE EEE1CA100SR | T | 194.4/42.8 |
| C189 | 4510008540 | S.ELE EEE1CA100SR | T | 180.2/45.6 |
| C190 | 4030011340 | S.CER C1608 CH 1H 471J-T | T | 194.6/33.4 |
| C191 | 4030012610 | S.CER C2012 JB 1C 474K-T | T | 191.1/37.7 |
| C192 | 4030011340 | S.CER C1608 CH 1H 471J-T | T | 180.4/35.4 |
| C193 | 4510008540 | S.ELE EEE1CA100SR | T | 186.8/31.6 |
| C194 | 4030012600 | S.CER C2012 JB 1A 105M-T | T | 180.9/59.4 |
| C195 | 4030012600 | S.CER C2012 JB 1A 105M-T | T | 180.7/54.6 |
| C196 | 4510008500 | S.ELE EEE1CA101WP | T | 176.1/36.5 |
| C197 | 4510008500 | S.ELE EEE1CA101WP | T | 199.7/31.9 |

## [MAIN UNIT]

| REF NO. | ORDER NO. | DESCRIPTION | M. | H/V LOCATION |
|---|---|---|---|---|
| C198 | 4030011600 | S.CER C1608 JB 1E 104K-T | T | 125.6/95.8 |
| C200 | 4510008540 | S.ELE EEE1CA100SR | T | 153.3/80.5 |
| C201 | 4510008540 | S.ELE EEE1CA100SR | T | 160.5/80 |
| C203 | 4510008550 | S.ELE EEE1HA010SR | T | 170.6/70.7 |
| C204 | 4510008550 | S.ELE EEE1HA010SR | T | 142.1/70.9 |
| C205 | 4030011600 | S.CER C1608 JB 1E 104K-T | B | 148.2/71.8 |
| C206 | 4030009970 | S.CER C1608 JB 1H 182K-T | T | 192/33.4 |
| C207 | 4030009970 | S.CER C1608 JB 1H 182K-T | T | 181.1/33.6 |
| C208 | 4030011600 | S.CER C1608 JB 1E 104K-T | T | 219/42.5 |
| C209 | 4030011600 | S.CER C1608 JB 1E 104K-T | B | 244/25.5 |
| C210 | 4510008550 | S.ELE EEE1HA010SR | T | 168.1/100.5 |
| C211 | 4510008540 | S.ELE EEE1CA100SR | T | 160.5/84.8 |
| C212 | 4510008530 | S.ELE EEE1HA2R2SR | T | 169.7/94.9 |
| C213 | 4030017840 | S.CER C2012 CH 1H 222J-T | T | 166.7/91.5 |
| C214 | 4510008540 | S.ELE EEE1CA100SR | T | 170.6/85.3 |
| C215 | 4510008550 | S.ELE EEE1HA010SR | T | 150.5/85.3 |
| C216 | 4510008550 | S.ELE EEE1HA010SR | T | 142.6/85.3 |
| C217 | 4030007120 | S.CER C1608 CH 1H 820J-T | T | 164.9/73.5 |
| C220 | 4510008550 | S.ELE EEE1HA010SR | T | 163.3/100.5 |
| C221 | 4510008540 | S.ELE EEE1CA100SR | T | 170.6/90.1 |
| C222 | 4510008530 | S.ELE EEE1HA2R2SR | T | 151.3/94.9 |
| C223 | 4030017840 | S.CER C2012 CH 1H 222J-T | T | 154.3/91.5 |
| C225 | 4510008550 | S.ELE EEE1HA010SR | T | 150.5/90.1 |
| C226 | 4510008550 | S.ELE EEE1HA010SR | T | 142.6/90.2 |
| C230 | 4510008500 | S.ELE EEE1CA101WP | T | 68.9/10.5 |
| C231 | 4510008500 | S.ELE EEE1CA101WP | T | 84.1/21.9 |
| C233 | 4510008550 | S.ELE EEE1HA010SR | T | 69.8/16.5 |
| C234 | 4030007170 | S.CER C1608 CH 1H 221J-T | T | 73/20.3 |
| C235 | 4030011600 | S.CER C1608 JB 1E 104K-T | T | 79.1/22 |
| C241 | 4510008540 | S.ELE EEE1CA100SR | T | 232.1/28.1 |
| C242 | 4510004591 | ELE 16 ME 470 HC | | |
| C243 | 4510008500 | S.ELE EEE1CA101WP | T | 176.7/63 |
| C244 | 4030011600 | S.CER C1608 JB 1E 104K-T | T | 176/56.8 |
| C249 | 4030011600 | S.CER C1608 JB 1E 104K-T | T | 160.3/68.3 |
| C250 | 4030011600 | S.CER C1608 JB 1E 104K-T | T | 133.1/39.1 |
| C251 | 4030011600 | S.CER C1608 JB 1E 104K-T | T | 143.3/32.8 |
| C260 | 4030011600 | S.CER C1608 JB 1E 104K-T | T | 133.1/53.5 |
| C261 | 4030011600 | S.CER C1608 JB 1E 104K-T | T | 143.2/47.1 |
| C290 | 4030011600 | S.CER C1608 JB 1E 104K-T | T | 149.1/28.2 |
| C291 | 4030011600 | S.CER C1608 JB 1E 104K-T | T | 142.9/38.1 |
| C310 | 4030011600 | S.CER C1608 JB 1E 104K-T | T | 153.7/43.3 |
| C311 | 4030011600 | S.CER C1608 JB 1E 104K-T | T | 142.9/52.6 |
| C330 | 4030011600 | S.CER C1608 JB 1E 104K-T | T | 154.6/58.5 |
| C331 | 4030011600 | S.CER C1608 JB 1E 104K-T | T | 154.6/63.5 |
| C332 | 4030011600 | S.CER C1608 JB 1E 104K-T | T | 162.4/55.9 |
| C333 | 4030011600 | S.CER C1608 JB 1E 104K-T | T | 164.7/66.8 |
| C340 | 4030017810 | S.CER C1608 CH 1H 102J-T | B | 206/97 |
| C341 | 4030017810 | S.CER C1608 CH 1H 102J-T | B | 191.2/97 |
| C342 | 4030011600 | S.CER C1608 JB 1E 104K-T | B | 199.8/26.2 |
| C343 | 4030007130 | S.CER C1608 CH 1H 101J-T | B | 211.8/97 |
| C344 | 4510008590 | S.ELE EEE1AA101SP | T | 209.7/30.6 |
| C351 | 4510008540 | S.ELE EEE1CA100SR | T | 132.4/89.7 |
| C352 | 4030011600 | S.CER C1608 JB 1E 104K-T | T | 127.1/84 |
| C360 | 4030017810 | S.CER C1608 CH 1H 102J-T | B | 153.8/96.9 |
| C361 | 4030017810 | S.CER C1608 CH 1H 102J-T | B | 141.8/92.7 |
| C362 | 4030011600 | S.CER C1608 JB 1E 104K-T | B | 144.7/27.5 |
| C363 | 4030007130 | S.CER C1608 CH 1H 101J-T | B | 157.1/96.9 |
| C364 | 4510008590 | S.ELE EEE1AA101SP | T | 152.8/14.7 |
| C380 | 4030017810 | S.CER C1608 CH 1H 102J-T | B | 27.6/37.6 |
| C381 | 4030017810 | S.CER C1608 CH 1H 102J-T | B | 27.7/52.4 |
| C383 | 4030007130 | S.CER C1608 CH 1H 101J-T | B | 16.5/52.2 |
| C384 | 4510008590 | S.ELE EEE1AA101SP | T | 92.9/45.8 |
| C400 | 4030006880 | S.CER C1608 JB 1H 472K-T | T | 240.5/11.7 |
| C401 | 4030006880 | S.CER C1608 JB 1H 472K-T | B | 234.8/15.5 |
| C402 | 4030006880 | S.CER C1608 JB 1H 472K-T | B | 238.1/15.5 |
| C403 | 4030006880 | S.CER C1608 JB 1H 472K-T | T | 230.5/16 |
| C404 | 4030006880 | S.CER C1608 JB 1H 472K-T | T | 231.9/13.1 |
| C405 | 4030006880 | S.CER C1608 JB 1H 472K-T | T | 43.2/12.9 |
| C406 | 4030006880 | S.CER C1608 JB 1H 472K-T | T | 31.1/15.3 |
| C407 | 4030006880 | S.CER C1608 JB 1H 472K-T | T | 43.2/11.6 |
| C408 | 4030006880 | S.CER C1608 JB 1H 472K-T | T | 32/12.6 |
| C409 | 4030006880 | S.CER C1608 JB 1H 472K-T | T | 30.7/12.6 |
| C410 | 4030006880 | S.CER C1608 JB 1H 472K-T | T | 14.7/41 |
| C411 | 4030006880 | S.CER C1608 JB 1H 472K-T | B | 14.7/39.6 |
| C412 | 4030006880 | S.CER C1608 JB 1H 472K-T | T | 14.7/38 |
| C413 | 4030006880 | S.CER C1608 JB 1H 472K-T | B | 14.7/36.4 |
| C414 | 4030006880 | S.CER C1608 JB 1H 472K-T | B | 12.7/33 |
| C415 | 4030006880 | S.CER C1608 JB 1H 472K-T | T | 12.8/32 |
| C416 | 4030006880 | S.CER C1608 JB 1H 472K-T | B | 12.8/31 |
| C418 | 4030006880 | S.CER C1608 JB 1H 472K-T | B | 12/28.2 |
| C430 | 4030006880 | S.CER C1608 JB 1H 472K-T | B | 9/68.9 |
| C431 | 4030006880 | S.CER C1608 JB 1H 472K-T | B | 9/70.9 |
| C432 | 4030006880 | S.CER C1608 JB 1H 472K-T | B | 9/72.9 |
| C435 | 4030006880 | S.CER C1608 JB 1H 472K-T | B | 9/74.5 |
| C440 | 4030006880 | S.CER C1608 JB 1H 472K-T | T | 166.2/13.5 |
| C441 | 4030006880 | S.CER C1608 JB 1H 472K-T | T | 158.9/13.1 |
| C442 | 4030006880 | S.CER C1608 JB 1H 472K-T | T | 162.6/15.7 |
| C450 | 4030006880 | S.CER C1608 JB 1H 472K-T | B | 250.3/14.2 |
| C451 | 4030006880 | S.CER C1608 JB 1H 472K-T | T | 241.8/10.8 |
| C452 | 4030006880 | S.CER C1608 JB 1H 472K-T | B | 244/23.7 |
| C453 | 4030006880 | S.CER C1608 JB 1H 472K-T | B | 244/27.3 |
| C454 | 4030006880 | S.CER C1608 JB 1H 472K-T | B | 244.1/29 |

M.=Mounted side (T: Mounted on the Top side, B: Mounted on the Bottom side)
S.=Surface mount

## [MAIN UNIT]

| REF NO. | ORDER NO. | DESCRIPTION | M. | H/V LOCATION |
|---|---|---|---|---|
| C455 | 4030006880 | S.CER C1608 JB 1H 472K-T | B | 244.1/32.3 |
| C456 | 4030006880 | S.CER C1608 JB 1H 472K-T | B | 250.4/39.6 |
| C460 | 4510008550 | S.ELE EEE1HA010SR | T | 142.1/80.5 |
| C461 | 4510008550 | S.ELE EEE1HA010SR | T | 170.6/75.7 |
| C464 | 4510008540 | S.ELE EEE1CA100SR | T | 153.3/75.7 |
| C465 | 4030011600 | S.CER C1608 JB 1E 104K-T | B | 144.1/75.4 |
| C466 | 4030011600 | S.CER C1608 JB 1E 104K-T | B | 148.2/75.4 |
| C467 | 4030012600 | S.CER C2012 JB 1A 105M-T | T | 139.3/76.4 |
| C469 | 4510008550 | S.ELE EEE1HA010SR | T | 170.6/80.5 |
| C470 | 4510008550 | S.ELE EEE1HA010SR | T | 153.3/70.9 |
| C480 | 4550007320 | S.TAN F930J226MAABMA | B | 216.6/32.3 |
| C481 | 4550007320 | S.TAN F930J226MAABMA | B | 208.7/31.3 |
| C483 | 4550007320 | S.TAN F930J226MAABMA | B | 156/16.2 |
| C484 | 4550007320 | S.TAN F930J226MAABMA | B | 163.9/15.2 |
| C486 | 4550007320 | S.TAN F930J226MAABMA | B | 93.6/55.4 |
| C487 | 4550007320 | S.TAN F930J226MAABMA | B | 93.5/47.5 |
| C489 | 4030011600 | S.CER C1608 JB 1E 104K-T | B | 220.9/31.1 |
| C490 | 4030011600 | S.CER C1608 JB 1E 104K-T | B | 150.2/13.6 |
| C491 | 4030011600 | S.CER C1608 JB 1E 104K-T | B | 89.8/57 |
| C492 | 4030006880 | S.CER C1608 JB 1H 472K-T | T | 207.6/13 |
| C493 | 4510008540 | S.ELE EEE1CA100SR | T | 205.4/3.8 |
| C494 | 4510004591 | ELE 16 ME 470 HC | | |
| C495 | 4030011600 | S.CER C1608 JB 1E 104K-T | B | 26.3/123 |
| C496 | 4030011600 | S.CER C1608 JB 1E 104K-T | B | 5.7/119.9 |
| C497 | 4030011600 | S.CER C1608 JB 1E 104K-T | T | 12.7/122.5 |
| C498 | 4510004591 | ELE 16 ME 470 HC | | |
| C499 | 4030011600 | S.CER C1608 JB 1E 104K-T | B | 229.4/26.6 |
| C501 | 4030011600 | S.CER C1608 JB 1E 104K-T | T | 19.2/58.3 |
| C502 | 4030010020 | S.CER C1608 JB 1H 122K-T | T | 23.7/58.3 |
| C503 | 4030009980 | S.CER C1608 JB 1H 152K-T | T | 22.2/60.9 |
| C505 | 4030011330 | S.CER C1608 CH 1H 391J-T | T | 25.2/58.3 |
| C506 | 4030011600 | S.CER C1608 JB 1E 104K-T | T | 26/64.4 |
| C507 | 4510008540 | S.ELE EEE1CA100SR | T | 29.1/66.3 |
| C508 | 4510008540 | S.ELE EEE1CA100SR | T | 16.1/66.3 |
| C509 | 4030011600 | S.CER C1608 JB 1E 104K-T | T | 19.2/66.5 |
| C510 | 4030008470 | S.CER C1608 JB 1H 272K-T | T | 20.7/72.4 |
| C511 | 4030011280 | S.CER C1608 CH 1H 271J-T | T | 25.2/72.4 |
| C512 | 4030011600 | S.CER C1608 JB 1E 104K-T | T | 26/76.8 |
| C513 | 4510008540 | S.ELE EEE1CA100SR | T | 29.1/77.7 |
| C514 | 4030011600 | S.CER C1608 JB 1E 104K-T | T | 19.2/78.4 |
| C515 | 4510008540 | S.ELE EEE1CA100SR | T | 16.1/78.2 |
| C516 | 4030006860 | S.CER C1608 JB 1H 102K-T | T | 22.7/87.5 |
| C517 | 4030011600 | S.CER C1608 JB 1E 104K-T | T | 20.3/91.9 |
| C518 | 4030011600 | S.CER C1608 JB 1E 104K-T | T | 25.3/87.5 |
| C519 | 4030011600 | S.CER C1608 JB 1E 104K-T | T | 26.6/87.5 |
| C520 | 4510008540 | S.ELE EEE1CA100SR | T | 30.4/86.7 |
| C521 | 4030011600 | S.CER C1608 JB 1E 104K-T | T | 24/87.5 |
| C522 | 4030011600 | S.CER C1608 JB 1E 104K-T | B | 18.6/91.9 |
| C523 | 4030011600 | S.CER C1608 JB 1E 104K-T | B | 21.6/91.9 |
| C524 | 4510008540 | S.ELE EEE1CA100SR | T | 29.7/97 |
| C525 | 4030006880 | S.CER C1608 JB 1H 472K-T | T | 26.1/91.9 |
| C526 | 4030011600 | S.CER C1608 JB 1E 104K-T | B | 26.1/87.7 |
| C527 | 4030006880 | S.CER C1608 JB 1H 472K-T | B | 29.5/91.9 |
| C528 | 4030011600 | S.CER C1608 JB 1E 104K-T | B | 29.5/94.9 |
| C529 | 4030011600 | S.CER C1608 JB 1E 104K-T | B | 33.5/87.1 |
| C530 | 4030011600 | S.CER C1608 JB 1E 104K-T | B | 33.5/98.8 |
| C531 | 4030006880 | S.CER C1608 JB 1H 472K-T | B | 37.2/94.6 |
| C532 | 4030006880 | S.CER C1608 JB 1H 472K-T | B | 37.2/91.3 |
| C533 | 4030006880 | S.CER C1608 JB 1H 472K-T | B | 46.3/95.1 |
| C534 | 4030006880 | S.CER C1608 JB 1H 472K-T | B | 46.3/82 |
| C535 | 4030006880 | S.CER C1608 JB 1H 472K-T | B | 47.3/88.5 |
| C536 | 4030011600 | S.CER C1608 JB 1E 104K-T | B | 42.7/91.4 |
| C537 | 4030006880 | S.CER C1608 JB 1H 472K-T | B | 51.7/82 |
| C538 | 4030008920 | S.CER C1608 JB 1H 473K-T | B | 50.5/85.7 |
| C539 | 4030011600 | S.CER C1608 JB 1E 104K-T | T | 52.2/84.4 |
| C540 | 4510008540 | S.ELE EEE1CA100SR | T | 49.1/84.5 |
| C541 | 4030011600 | S.CER C1608 JB 1E 104K-T | B | 49.9/95.1 |
| C544 | 4030009530 | S.CER C1608 CH 1H 030B-T | T | 88.8/94.2 |
| C545 | 4030011600 | S.CER C1608 JB 1E 104K-T | T | 131.8/108 |
| C546 | 4030011340 | S.CER C1608 CH 1H 471J-T | B | 69.8/90.7 |
| C548 | 4030011600 | S.CER C1608 JB 1E 104K-T | T | 128.7/102.3 |
| C550 | 4510008540 | S.ELE EEE1CA100SR | T | 127.4/108 |
| C551 | 4030006880 | S.CER C1608 JB 1H 472K-T | B | 101.6/91.6 |
| C552 | 4030006860 | S.CER C1608 JB 1H 102K-T | B | 106.4/82.7 |
| C553 | 4030011770 | S.CER C1608 CH 1H 060B-T | B | 104.8/82.7 |
| C554 | 4030011600 | S.CER C1608 JB 1E 104K-T | B | 103/79.3 |
| C555 | 4030007030 | S.CER C1608 CH 1H 150J-T | B | 97.9/80.1 |
| C556 | 4030006880 | S.CER C1608 JB 1H 472K-T | B | 102.9/76.5 |
| C558 | 4030007040 | S.CER C1608 CH 1H 180J-T | T | 81.9/69.4 |
| C559 | 4030006880 | S.CER C1608 JB 1H 472K-T | T | 108.4/67.1 |
| C560 | 4030007080 | S.CER C1608 CH 1H 390J-T | T | 108.4/64.2 |
| C561 | 4030006880 | S.CER C1608 JB 1H 472K-T | T | 105/71.3 |
| C562 | 4030006860 | S.CER C1608 JB 1H 102K-T | B | 105.6/64.2 |
| C563 | 4030011600 | S.CER C1608 JB 1E 104K-T | T | 98.8/71.3 |
| C564 | 4030007080 | S.CER C1608 CH 1H 390J-T | B | 75.9/67.2 |
| C565 | 4030007130 | S.CER C1608 CH 1H 101J-T | B | 72.5/68.9 |
| C566 | 4030007120 | S.CER C1608 CH 1H 820J-T | B | 69.4/68.5 |
| C567 | 4030007090 | S.CER C1608 CH 1H 470J-T | B | 69.4/70.3 |
| C568 | 4030007130 | S.CER C1608 CH 1H 101J-T | B | 67.1/69.1 |
| C569 | 4030011600 | S.CER C1608 JB 1E 104K-T | B | 62.8/68.1 |
| C570 | 4030006900 | S.CER C1608 JB 1H 103K-T | B | 62.9/59.2 |
| C571 | 4030011600 | S.CER C1608 JB 1E 104K-T | B | 58.8/66 |

## [MAIN UNIT]

| REF NO. | ORDER NO. | DESCRIPTION | M. | H/V LOCATION |
|---|---|---|---|---|
| C572 | 4030006900 | S.CER C1608 JB 1H 103K-T | B | 60/58.4 |
| C573 | 4030011600 | S.CER C1608 JB 1E 104K-T | B | 66.7/59.2 |
| C574 | 4030011600 | S.CER C1608 JB 1E 104K-T | B | 53.3/57 |
| C576 | 4610001590 | S.TRI TZC3R100A110R00 | T | 95.5/95.8 |
| C577 | 4030011600 | S.CER C1608 JB 1E 104K-T | B | 54.6/63 |
| C578 | 4030007100 | S.CER C1608 CH 1H 560J-T | B | 91.4/74.5 |
| C579 | 4030006980 | S.CER C1608 CH 1H 070D-T | B | 89.2/76.8 |
| C580 | 4030007100 | S.CER C1608 CH 1H 560J-T | B | 93.2/76.5 |
| C581 | 4030007050 | S.CER C1608 CH 1H 220J-T | B | 22.6/69.5 |
| C582 | 4030007050 | S.CER C1608 CH 1H 220J-T | T | 20.7/84.6 |
| C583 | 4030011600 | S.CER C1608 JB 1E 104K-T | T | 27.2/81.6 |
| C584 | 4030009650 | S.CER C1608 CH 1H 240J-T | B | 104.5/67.3 |
| C585 | 4030006980 | S.CER C1608 CH 1H 070D-T | B | 102.9/67.3 |
| C586 | 4030007070 | S.CER C1608 CH 1H 330J-T | B | 98.5/70.2 |
| C587 | 4030007010 | S.CER C1608 CH 1H 100D-T | B | 97/64.9 |
| C588 | 4030007060 | S.CER C1608 CH 1H 270J-T | B | 96.5/70.2 |
| C589 | 4030007020 | S.CER C1608 CH 1H 120J-T | B | 63.8/72.8 |
| C590 | 4030007100 | S.CER C1608 CH 1H 560J-T | B | 62.1/74.5 |
| C601 | 4030006860 | S.CER C1608 JB 1H 102K-T | B | 40.9/52.4 |
| C602 | 4030006860 | S.CER C1608 JB 1H 102K-T | B | 42.7/52.4 |
| C603 | 4030011600 | S.CER C1608 JB 1E 104K-T | B | 40.9/49.1 |
| C604 | 4030007140 | S.CER C1608 CH 1H 121J-T | B | 38.1/49.8 |
| C605 | 4030010760 | S.CER C1608 CH 1H 331J-T | B | 38.1/48 |
| C606 | 4030007160 | S.CER C1608 CH 1H 181J-T | B | 33.8/45.5 |
| C607 | 4030007060 | S.CER C1608 CH 1H 270J-T | B | 35.6/45.5 |
| C608 | 4030010760 | S.CER C1608 CH 1H 331J-T | B | 38.1/46.2 |
| C609 | 4030007090 | S.CER C1608 CH 1H 470J-T | B | 38.1/40.8 |
| C610 | 4030007160 | S.CER C1608 CH 1H 181J-T | B | 35.6/41.5 |
| C611 | 4030007060 | S.CER C1608 CH 1H 270J-T | B | 33.8/41.5 |
| C612 | 4030007140 | S.CER C1608 CH 1H 121J-T | B | 38.1/37.1 |
| C613 | 4030010760 | S.CER C1608 CH 1H 331J-T | B | 38.1/39 |
| C614 | 4030006860 | S.CER C1608 JB 1H 102K-T | B | 40.9/34.5 |
| C615 | 4030011600 | S.CER C1608 JB 1E 104K-T | B | 40.9/37.8 |
| C616 | 4030006860 | S.CER C1608 JB 1H 102K-T | B | 42.7/34.5 |
| C617 | 4030010040 | S.CER C1608 JB 1H 561K-T | B | 51.7/52.4 |
| C618 | 4030010760 | S.CER C1608 CH 1H 331J-T | B | 53.5/52.4 |
| C619 | 4030011600 | S.CER C1608 JB 1E 104K-T | B | 51.7/49.1 |
| C620 | 4030010760 | S.CER C1608 CH 1H 331J-T | B | 48.9/49.8 |
| C621 | 4030007080 | S.CER C1608 CH 1H 390J-T | B | 48.9/48 |
| C622 | 4030007080 | S.CER C1608 CH 1H 390J-T | B | 44.5/45.5 |
| C623 | 4030010760 | S.CER C1608 CH 1H 331J-T | B | 46.4/45.5 |
| C624 | 4030007090 | S.CER C1608 CH 1H 470J-T | B | 48.9/46.2 |
| C625 | 4030010760 | S.CER C1608 CH 1H 331J-T | B | 48.9/40.8 |
| C626 | 4030007080 | S.CER C1608 CH 1H 390J-T | B | 46.4/41.5 |
| C627 | 4030010760 | S.CER C1608 CH 1H 331J-T | B | 44.6/41.5 |
| C628 | 4030007080 | S.CER C1608 CH 1H 390J-T | B | 48.9/37.1 |
| C629 | 4030010760 | S.CER C1608 CH 1H 331J-T | B | 48.9/39 |
| C630 | 4030010760 | S.CER C1608 CH 1H 331J-T | B | 51.7/34.5 |
| C631 | 4030011600 | S.CER C1608 JB 1E 104K-T | B | 51.7/37.8 |
| C632 | 4030010040 | S.CER C1608 JB 1H 561K-T | B | 53.5/34.5 |
| C633 | 4030010040 | S.CER C1608 JB 1H 561K-T | B | 62.5/52.4 |
| C634 | 4030011330 | S.CER C1608 CH 1H 391J-T | B | 64.3/52.4 |
| C635 | 4030011600 | S.CER C1608 JB 1E 104K-T | B | 62.5/49.1 |
| C636 | 4030007160 | S.CER C1608 CH 1H 181J-T | B | 59.7/49.8 |
| C637 | 4030007070 | S.CER C1608 CH 1H 330J-T | B | 59.7/48 |
| C638 | 4030007030 | S.CER C1608 CH 1H 150J-T | B | 55.4/45.5 |
| C639 | 4030007120 | S.CER C1608 CH 1H 820J-T | B | 57.2/45.5 |
| C640 | 4030007100 | S.CER C1608 CH 1H 560J-T | B | 59.7/46.2 |
| C641 | 4030007140 | S.CER C1608 CH 1H 121J-T | B | 59.7/40.8 |
| C642 | 4030007030 | S.CER C1608 CH 1H 150J-T | B | 57.2/41.5 |
| C643 | 4030007120 | S.CER C1608 CH 1H 820J-T | B | 55.4/41.5 |
| C644 | 4030007070 | S.CER C1608 CH 1H 330J-T | B | 59.7/37.1 |
| C645 | 4030007160 | S.CER C1608 CH 1H 181J-T | B | 59.7/39 |
| C646 | 4030011330 | S.CER C1608 CH 1H 391J-T | B | 62.5/34.5 |
| C647 | 4030011600 | S.CER C1608 JB 1E 104K-T | B | 62.5/37.8 |
| C648 | 4030017800 | S.CER C1608 CH 1H 561J-T | B | 64.3/34.5 |
| C649 | 4030010760 | S.CER C1608 CH 1H 331J-T | B | 73.4/52.4 |
| C650 | 4030007150 | S.CER C1608 CH 1H 151J-T | B | 75.2/52.4 |
| C651 | 4030011600 | S.CER C1608 JB 1E 104K-T | B | 73.4/49.1 |
| C652 | 4030007150 | S.CER C1608 CH 1H 151J-T | B | 70.5/49.8 |
| C653 | 4030007060 | S.CER C1608 CH 1H 270J-T | B | 70.5/48 |
| C654 | 4030007060 | S.CER C1608 CH 1H 270J-T | B | 66.2/45.5 |
| C655 | 4030007140 | S.CER C1608 CH 1H 121J-T | B | 68/45.5 |
| C656 | 4030007010 | S.CER C1608 CH 1H 100D-T | B | 70.5/46.2 |
| C657 | 4030007150 | S.CER C1608 CH 1H 151J-T | B | 70.5/40.8 |
| C658 | 4030007060 | S.CER C1608 CH 1H 270J-T | B | 68/41.5 |
| C659 | 4030007140 | S.CER C1608 CH 1H 121J-T | B | 66.2/41.5 |
| C660 | 4030007060 | S.CER C1608 CH 1H 270J-T | B | 70.5/37.1 |
| C661 | 4030007150 | S.CER C1608 CH 1H 151J-T | B | 70.5/39 |
| C662 | 4030007150 | S.CER C1608 CH 1H 151J-T | B | 73.3/34.5 |
| C663 | 4030011600 | S.CER C1608 JB 1E 104K-T | B | 73.3/37.8 |
| C664 | 4030010760 | S.CER C1608 CH 1H 331J-T | B | 75.2/34.5 |
| C665 | 4030007170 | S.CER C1608 CH 1H 221J-T | B | 84.2/52.4 |
| C666 | 4030007170 | S.CER C1608 CH 1H 221J-T | B | 86/52.4 |
| C667 | 4030011600 | S.CER C1608 JB 1E 104K-T | B | 84.2/49.1 |
| C668 | 4030007130 | S.CER C1608 CH 1H 101J-T | B | 81.4/49.8 |
| C669 | 4030007050 | S.CER C1608 CH 1H 220J-T | B | 81.4/48 |
| C670 | 4030007080 | S.CER C1608 CH 1H 390J-T | B | 77.1/45.5 |
| C671 | 4030007070 | S.CER C1608 CH 1H 330J-T | B | 78.9/45.5 |
| C672 | 4030007050 | S.CER C1608 CH 1H 220J-T | B | 81.4/40.8 |
| C673 | 4030007120 | S.CER C1608 CH 1H 820J-T | B | 81.4/46.2 |
| C674 | 4030007080 | S.CER C1608 CH 1H 390J-T | B | 78.9/41.5 |

M.=Mounted side (T: Mounted on the Top side, B: Mounted on the Bottom side)
S.=Surface mount

## [MAIN UNIT]

| REF NO. | ORDER NO. | DESCRIPTION | M. | H/V LOCATION |
|---|---|---|---|---|
| C675 | 4030007070 | S.CER C1608 CH 1H 330J-T | B | 77.1/41.5 |
| C676 | 4030007050 | S.CER C1608 CH 1H 220J-T | B | 81.4/37.1 |
| C677 | 4030007130 | S.CER C1608 CH 1H 101J-T | B | 81.4/39 |
| C678 | 4030007170 | S.CER C1608 CH 1H 221J-T | B | 84.2/34.5 |
| C679 | 4030011600 | S.CER C1608 JB 1E 104K-T | B | 84.2/37.8 |
| C680 | 4030007170 | S.CER C1608 CH 1H 221J-T | B | 86/34.5 |
| C681 | 4030007170 | S.CER C1608 CH 1H 221J-T | T | 34.3/50.7 |
| C682 | 4030007110 | S.CER C1608 CH 1H 680J-T | T | 35.6/50.7 |
| C683 | 4030011600 | S.CER C1608 JB 1E 104K-T | T | 35.6/47.9 |
| C684 | 4030007090 | S.CER C1608 CH 1H 470J-T | T | 38.3/47.1 |
| C685 | 4030007090 | S.CER C1608 CH 1H 470J-T | T | 38.3/45.8 |
| C686 | 4030007070 | S.CER C1608 CH 1H 330J-T | T | 40.4/46.4 |
| C687 | 4030007070 | S.CER C1608 CH 1H 330J-T | T | 41.7/46.4 |
| C688 | 4030007010 | S.CER C1608 CH 1H 100D-T | T | 36.1/43.5 |
| C689 | 4030007120 | S.CER C1608 CH 1H 820J-T | T | 37.4/43.5 |
| C690 | 4030007070 | S.CER C1608 CH 1H 330J-T | T | 41.7/40.5 |
| C691 | 4030007070 | S.CER C1608 CH 1H 330J-T | T | 40.4/40.5 |
| C692 | 4030007090 | S.CER C1608 CH 1H 470J-T | T | 37.8/41 |
| C693 | 4030007090 | S.CER C1608 CH 1H 470J-T | T | 37.8/39.7 |
| C694 | 4030007110 | S.CER C1608 CH 1H 680J-T | T | 34.3/36.2 |
| C695 | 4030011600 | S.CER C1608 JB 1E 104K-T | T | 35.6/39 |
| C696 | 4030007050 | S.CER C1608 CH 1H 220J-T | T | 35.6/36.2 |
| C697 | 4030007160 | S.CER C1608 CH 1H 181J-T | T | 44/51.4 |
| C698 | 4030007090 | S.CER C1608 CH 1H 470J-T | T | 44/50.1 |
| C699 | 4030011600 | S.CER C1608 JB 1E 104K-T | T | 44.6/47.9 |
| C700 | 4030007090 | S.CER C1608 CH 1H 470J-T | T | 46.8/47.1 |
| C701 | 4030007040 | S.CER C1608 CH 1H 180J-T | T | 46.8/45.8 |
| C702 | 4030007030 | S.CER C1608 CH 1H 150J-T | T | 49.3/46.4 |
| C703 | 4030007050 | S.CER C1608 CH 1H 220J-T | T | 50.7/46.4 |
| C704 | 4030006990 | S.CER C1608 CH 1H 080D-T | T | 46.4/43.5 |
| C705 | 4030007090 | S.CER C1608 CH 1H 470J-T | T | 45.1/43.5 |
| C706 | 4030007030 | S.CER C1608 CH 1H 150J-T | T | 49.3/40.5 |
| C707 | 4030007050 | S.CER C1608 CH 1H 220J-T | T | 50.7/40.5 |
| C708 | 4030007040 | S.CER C1608 CH 1H 180J-T | T | 46.8/41 |
| C709 | 4030007090 | S.CER C1608 CH 1H 470J-T | T | 46.8/39.7 |
| C710 | 4030007090 | S.CER C1608 CH 1H 470J-T | T | 43.3/36.2 |
| C711 | 4030011600 | S.CER C1608 JB 1E 104K-T | T | 44.6/39 |
| C712 | 4030007160 | S.CER C1608 CH 1H 181J-T | T | 44.6/36.2 |
| C713 | 4030007140 | S.CER C1608 CH 1H 121J-T | T | 53.6/50.7 |
| C714 | 4030007040 | S.CER C1608 CH 1H 180J-T | T | 52.3/50.7 |
| C715 | 4030011600 | S.CER C1608 JB 1E 104K-T | T | 53.6/47.9 |
| C716 | 4030007070 | S.CER C1608 CH 1H 330J-T | T | 55.8/47.1 |
| C717 | 4030007040 | S.CER C1608 CH 1H 180J-T | T | 55.8/45.8 |
| C718 | 4030007010 | S.CER C1608 CH 1H 100D-T | T | 58.4/46.4 |
| C719 | 4030007070 | S.CER C1608 CH 1H 330J-T | T | 59.7/46.4 |
| C720 | 4030007010 | S.CER C1608 CH 1H 100D-T | T | 54.1/43.5 |
| C721 | 4030007090 | S.CER C1608 CH 1H 470J-T | T | 55.4/43.5 |
| C722 | 4030007010 | S.CER C1608 CH 1H 100D-T | T | 58.4/40.5 |
| C723 | 4030007070 | S.CER C1608 CH 1H 330J-T | T | 59.7/40.5 |
| C724 | 4030007040 | S.CER C1608 CH 1H 180J-T | T | 55.8/41 |
| C725 | 4030007070 | S.CER C1608 CH 1H 330J-T | T | 55.8/39.7 |
| C726 | 4030007040 | S.CER C1608 CH 1H 180J-T | T | 52.3/36.2 |
| C727 | 4030011600 | S.CER C1608 JB 1E 104K-T | T | 53.6/39 |
| C728 | 4030007140 | S.CER C1608 CH 1H 121J-T | T | 53.6/36.2 |
| C729 | 4030007130 | S.CER C1608 CH 1H 101J-T | T | 62.6/50.7 |
| C730 | 4030007030 | S.CER C1608 CH 1H 150J-T | T | 61.3/50.7 |
| C731 | 4030011600 | S.CER C1608 JB 1E 104K-T | T | 62.6/47.9 |
| C732 | 4030007050 | S.CER C1608 CH 1H 220J-T | T | 64.8/47.1 |
| C733 | 4030007020 | S.CER C1608 CH 1H 120J-T | T | 64.8/45.8 |
| C734 | 4030009500 | S.CER C1608 CH 1H 0R5B-T | T | 67.4/46.4 |
| C735 | 4030007050 | S.CER C1608 CH 1H 220J-T | T | 68.7/46.4 |
| C736 | 4030006980 | S.CER C1608 CH 1H 070D-T | T | 63.1/43.5 |
| C737 | 4030007050 | S.CER C1608 CH 1H 220J-T | T | 64.4/43.5 |
| C738 | 4030009500 | S.CER C1608 CH 1H 0R5B-T | T | 67.4/40.5 |
| C739 | 4030007050 | S.CER C1608 CH 1H 220J-T | T | 68.7/40.5 |
| C740 | 4030007020 | S.CER C1608 CH 1H 120J-T | T | 64.8/41 |
| C741 | 4030007050 | S.CER C1608 CH 1H 220J-T | T | 64.8/39.7 |
| C742 | 4030007030 | S.CER C1608 CH 1H 150J-T | T | 61.3/36.2 |
| C743 | 4030011600 | S.CER C1608 JB 1E 104K-T | T | 62.6/39 |
| C744 | 4030007130 | S.CER C1608 CH 1H 101J-T | T | 62.6/36.2 |
| C745 | 4030007140 | S.CER C1608 CH 1H 121J-T | T | 73.5/49.6 |
| C747 | 4030011600 | S.CER C1608 JB 1E 104K-T | T | 71.5/48.8 |
| C749 | 4030009550 | S.CER C1608 CH 1H 2R5B-T | T | 75.9/46.2 |
| C750 | 4030011770 | S.CER C1608 CH 1H 060B-T | T | 73.8/46.9 |
| C751 | 4030007010 | S.CER C1608 CH 1H 100D-T | T | 73.8/45.5 |
| C755 | 4030009550 | S.CER C1608 CH 1H 2R5B-T | T | 75.9/41 |
| C756 | 4030011770 | S.CER C1608 CH 1H 060B-T | T | 73.8/40.2 |
| C758 | 4030011600 | S.CER C1608 JB 1E 104K-T | T | 71.5/38.1 |
| C759 | 4030007140 | S.CER C1608 CH 1H 121J-T | T | 73.5/37.3 |
| C760 | 4030011770 | S.CER C1608 CH 1H 060B-T | T | 73.8/48.2 |
| C761 | 4030011770 | S.CER C1608 CH 1H 060B-T | T | 73.8/41.8 |
| C801 | 4030006880 | S.CER C1608 JB 1H 472K-T | T | 37.2/20.6 |
| C802 | 4030011600 | S.CER C1608 JB 1E 104K-T | T | 37.2/27.5 |
| C803 | 4030011600 | S.CER C1608 JB 1E 104K-T | B | 37.2/20.5 |
| C804 | 4030011600 | S.CER C1608 JB 1E 104K-T | T | 46.9/19.9 |
| C805 | 4030011600 | S.CER C1608 JB 1E 104K-T | B | 52/24.6 |
| C806 | 4030006900 | S.CER C1608 JB 1H 103K-T | B | 48.5/23.7 |
| C807 | 4030011600 | S.CER C1608 JB 1E 104K-T | T | 48.5/23.9 |
| C812 | 4030006900 | S.CER C1608 JB 1H 103K-T | B | 86.2/84.7 |
| C813 | 4030006880 | S.CER C1608 JB 1H 472K-T | T | 31.2/27.5 |
| C814 | 4030012600 | S.CER C2012 JB 1A 105M-T | T | 27.7/25.5 |
| C815 | 4030006990 | S.CER C1608 CH 1H 080D-T | B | 44.3/21 |

## [MAIN UNIT]

| REF NO. | ORDER NO. | DESCRIPTION | M. | H/V LOCATION |
|---|---|---|---|---|
| C816 | 4030012600 | S.CER C2012 JB 1A 105M-T | T | 30.9/29 |
| C817 | 4030011330 | S.CER C1608 CH 1H 391J-T | T | 85.2/55.1 |
| C818 | 4030017810 | S.CER C1608 CH 1H 102J-T | T | 83.2/53.2 |
| C819 | 4030009920 | S.CER C1608 CH 1H 050B-T | T | 83.2/55.8 |
| C820 | 4030006900 | S.CER C1608 JB 1H 103K-T | T | 74.6/62.1 |
| C821 | 4030011600 | S.CER C1608 JB 1E 104K-T | T | 87.4/62.8 |
| C822 | 4030011600 | S.CER C1608 JB 1E 104K-T | T | 78.3/58.6 |
| C823 | 4030012600 | S.CER C2012 JB 1A 105M-T | T | 86.2/51.5 |
| C824 | 4030006900 | S.CER C1608 JB 1H 103K-T | T | 83.6/49.8 |
| C825 | 4030008880 | S.CER C1608 JB 1H 223K-T | T | 84.4/47.8 |
| C826 | 4030008850 | S.CER C1608 JB 1H 123K-T | T | 82.3/46.8 |
| C827 | 4030008850 | S.CER C1608 JB 1H 123K-T | T | 82.3/45.5 |
| C828 | 4030006900 | S.CER C1608 JB 1H 103K-T | T | 85.7/42.7 |
| C829 | 4030008860 | S.CER C1608 JB 1H 153K-T | T | 82.3/42.7 |
| C830 | 4030008860 | S.CER C1608 JB 1H 153K-T | T | 82.3/41.4 |
| C831 | 4030008650 | S.CER C1608 JB 1H 332K-T | T | 84.4/39.8 |
| C832 | 4030006900 | S.CER C1608 JB 1H 103K-T | T | 82.3/39.6 |
| C833 | 4030006900 | S.CER C1608 JB 1H 103K-T | T | 82.3/38.3 |
| C834 | 4030012600 | S.CER C2012 JB 1A 105M-T | T | 82.1/35.4 |
| C835 | 4030011600 | S.CER C1608 JB 1E 104K-T | T | 82.3/37 |
| C836 | 4030009920 | S.CER C1608 CH 1H 050B-T | T | 89.5/57.9 |
| C837 | 4550006470 | S.TAN TEESVB2 1D 106M8R | T | 72.9/58.7 |
| C838 | 4550006470 | S.TAN TEESVB2 1D 106M8R | T | 91.8/61.6 |
| C839 | 4030006880 | S.CER C1608 JB 1H 472K-T | B | 85.3/74.2 |
| C840 | 4030011600 | S.CER C1608 JB 1E 104K-T | B | 86/81.4 |
| C841 | 4030006880 | S.CER C1608 JB 1H 472K-T | B | 81.2/78.3 |
| C845 | 4030011600 | S.CER C1608 JB 1E 104K-T | T | 35.3/69.8 |
| C846 | 4030011600 | S.CER C1608 JB 1E 104K-T | T | 38.1/74.7 |
| C847 | 4510008540 | S.ELE EEE1CA100SR | T | 37.1/77.8 |
| C901 | 4030006880 | S.CER C1608 JB 1H 472K-T | B | 125.2/1.8 |
| C902 | 4030006880 | S.CER C1608 JB 1H 472K-T | T | 124.2/1.8 |
| C903 | 4030006880 | S.CER C1608 JB 1H 472K-T | B | 123.2/1.8 |
| C904 | 4030006880 | S.CER C1608 JB 1H 472K-T | T | 122.2/1.8 |
| C905 | 4030006880 | S.CER C1608 JB 1H 472K-T | B | 121.2/1.8 |
| C906 | 4030006880 | S.CER C1608 JB 1H 472K-T | T | 120.2/1.8 |
| C907 | 4030006880 | S.CER C1608 JB 1H 472K-T | B | 119.2/1.8 |
| C908 | 4030006880 | S.CER C1608 JB 1H 472K-T | T | 118.2/1.8 |
| C909 | 4030006880 | S.CER C1608 JB 1H 472K-T | B | 117.2/1.8 |
| C922 | 4030006880 | S.CER C1608 JB 1H 472K-T | T | 123.7/18.9 |
| C923 | 4030006880 | S.CER C1608 JB 1H 472K-T | B | 122.7/19.4 |
| C924 | 4030006880 | S.CER C1608 JB 1H 472K-T | T | 121.7/18.9 |
| C925 | 4030006880 | S.CER C1608 JB 1H 472K-T | B | 120.7/19.4 |
| C926 | 4030006880 | S.CER C1608 JB 1H 472K-T | T | 119.7/18.9 |
| C927 | 4030006880 | S.CER C1608 JB 1H 472K-T | B | 118.7/19.4 |
| C928 | 4030006880 | S.CER C1608 JB 1H 472K-T | T | 117.7/18.9 |
| C929 | 4030006880 | S.CER C1608 JB 1H 472K-T | B | 116.7/19.4 |
| C930 | 4030006880 | S.CER C1608 JB 1H 472K-T | T | 115.7/18.9 |
| C932 | 4030006880 | S.CER C1608 JB 1H 472K-T | T | 113.7/18.9 |
| C933 | 4030006880 | S.CER C1608 JB 1H 472K-T | B | 112.7/19.4 |
| C934 | 4030006880 | S.CER C1608 JB 1H 472K-T | T | 111.7/18.9 |
| C936 | 4030006880 | S.CER C1608 JB 1H 472K-T | T | 109.7/18.9 |
| C937 | 4030006880 | S.CER C1608 JB 1H 472K-T | B | 108.7/19.4 |
| C945 | 4030006880 | S.CER C1608 JB 1H 472K-T | B | 89.3/1.8 |
| C946 | 4030006880 | S.CER C1608 JB 1H 472K-T | T | 88.3/1.8 |
| C947 | 4030006880 | S.CER C1608 JB 1H 472K-T | B | 87.3/1.8 |
| C948 | 4030006880 | S.CER C1608 JB 1H 472K-T | T | 86.3/1.8 |
| C952 | 4030006880 | S.CER C1608 JB 1H 472K-T | T | 82.3/1.8 |
| C953 | 4030006880 | S.CER C1608 JB 1H 472K-T | B | 81.3/1.8 |
| C954 | 4030006880 | S.CER C1608 JB 1H 472K-T | T | 80.3/1.8 |
| C955 | 4030006880 | S.CER C1608 JB 1H 472K-T | B | 79.3/1.8 |
| C957 | 4030006880 | S.CER C1608 JB 1H 472K-T | B | 77.3/1.8 |
| C958 | 4030006880 | S.CER C1608 JB 1H 472K-T | T | 76.3/1.9 |
| C974 | 4030006880 | S.CER C1608 JB 1H 472K-T | T | 79.8/19.4 |
| C975 | 4030006880 | S.CER C1608 JB 1H 472K-T | B | 78.8/19.3 |
| C976 | 4030006880 | S.CER C1608 JB 1H 472K-T | T | 77.8/19.4 |
| C977 | 4030006880 | S.CER C1608 JB 1H 472K-T | B | 76.8/19.3 |
| C978 | 4030006880 | S.CER C1608 JB 1H 472K-T | T | 75.8/19.4 |
| C979 | 4030006880 | S.CER C1608 JB 1H 472K-T | B | 74.8/19.3 |
| C980 | 4030006880 | S.CER C1608 JB 1H 472K-T | T | 12.8/30 |
| C981 | 4030006880 | S.CER C1608 JB 1H 472K-T | T | 126.2/1.8 |
| | | | | |
| RL50 | 6330000540 | RLY OMR-109F | | |
| RL140 | 6330001430 | RLY NA-12W-K | | |
| RL141 | 6330001430 | RLY NA-12W-K | | |
| | | | | |
| CP81 | 6910009670 | S.CHK HK3-S-T | T | 129.3/16.1 |
| CP82 | 6910009670 | S.CHK HK3-S-T | T | 116.4/75.1 |
| CP495 | 6910009670 | S.CHK HK3-S-T | T | 129.1/5.8 |
| CP496 | 6910009670 | S.CHK HK3-S-T | T | 107.1/5.8 |
| | | | | |
| J1 | 6510023671 | CNR TCS4480-0141577 | | |
| J2 | 6510023661 | CNR TCS4470-0141577 | | |
| J3 | 6510023671 | CNR TCS4480-0141577 | | |
| J4 | 6510023661 | CNR TCS4470-0141577 | | |
| J5 | 6450001130 | CNR JPJ2042-01-110 | | |
| J6 | 6510023730 | CNR LGY6502-0600C | | |
| J7 | 6510023730 | CNR LGY6502-0600C | | |
| J8 | 6510023740 | CNR LGR4609-7000 | | |
| J9 | 6510023070 | CNR HEC2305-01-250 | | |

M.=Mounted side (T: Mounted on the Top side, B: Mounted on the Bottom side)
S.=Surface mount

## [MAIN UNIT]

| REF NO. | ORDER NO. | DESCRIPTION | M. | H/V LOCATION |
|---|---|---|---|---|
| J140 | 6510023720 | CNR LGY6501-0600C | | |
| J141 | 6510023720 | CNR LGY6501-0600C | | |
| J142 | 6510018961 | S.CNR B2B-PH-SM4-TB (LF) (SN) | T | 256.2/96.5 |
| J340 | 6510022811 | CNR IMSA-9180B-22B-PT1 | | |
| J341 | 6510021651 | CNR IMSA-9180B-30B-PT1 | | |
| J360 | 6510022811 | CNR IMSA-9180B-22B-PT1 | | |
| J361 | 6510021651 | CNR IMSA-9180B-30B-PT1 | | |
| J380 | 6510022811 | CNR IMSA-9180B-22B-PT1 | | |
| J381 | 6510021651 | CNR IMSA-9180B-30B-PT1 | | |
| J399 | 6510007020 | CNR TMP-J01X-V6 | | |
| J400 | 6510019981 | S.CNR 52808-1671 (1690) | T | 232.7/5 |
| J401 | 6510022191 | S.CNR B3B-PH-SM4-TB (LF) (SN) | T | 232.7/98.9 |
| J403 | 6510019981 | S.CNR 52808-1671 (1690) | T | 32.5/5 |
| J404 | 6510022191 | S.CNR B3B-PH-SM4-TB (LF) (SN) | T | 143.8/115.4 |
| J410 | 6510020001 | S.CNR 52808-3071 (3090) | T | 5.5/42.5 |
| J411 | 6510019971 | S.CNR 52808-1071 | T | 5.6/98.7 |
| J430 | 6510022311 | S.CNR B5B-PH-SM4-TB (LF) (SN) | T | 5/72.9 |
| J440 | 6510018921 | S.CNR B8B-PH-SM4-TB (LF) (SN) | T | 154.5/5 |
| J450 | 6510003470 | CNR B11B-EH-S | | |
| J451 | 6510018941 | S.CNR B13B-PH-SM4-TB (LF) (SN) | T | 184.2/5 |
| J490 | 6510023750 | CNR 01K1971-10 | | |
| J491 | 6510007020 | CNR TMP-J01X-V6 | | |
| J492 | 6510014961 | S.CNR B2B-ZR-SM4-TF (LF) (SN) | T | 202.6/11.5 |
| J495 | 6510023701 | CNR TORX178S(F) | | |
| J496 | 6510023711 | CNR TOTX178S(F) | | |
| J501 | 6510007020 | CNR TMP-J01X-V6 | | |
| J502 | 6510007020 | CNR TMP-J01X-V6 | | |
| J503 | 6510007020 | CNR TMP-J01X-V6 | | |
| J801 | 6510007020 | CNR TMP-J01X-V6 | | |
| J802 | 6510007020 | CNR TMP-J01X-V6 | | |
| J808 | 6510007020 | CNR TMP-J01X-V6 | | |
| J900 | 6510022470 | S.CNR 40FLT-SM1-TB | T | 116.5/10.6 |
| J901 | 6510015541 | S.CNR B4B-ZR-SM4-TF (LF) (SN) | T | 9.2/113 |
| J940 | 6510022470 | S.CNR 40FLT-SM1-TB | T | 84.6/10.6 |
| F1 | 5220000230 | HOL S-N5054 | | |
| F2 | 5220000230 | HOL S-N5054 | | |
| F3 | 5210000041 | FUS FGB 2A PBF (FGB0 125V) | | |
| W1 | 9024801019 | JMP 74/98/020/X98/X98 | | |
| EP50 | 6910012350 | S.BEA MMZ1608Y 102BT | B | 78.1/126.8 |
| EP51 | 6910012350 | S.BEA MMZ1608Y 102BT | B | 95.6/118.7 |
| EP52 | 6910012350 | S.BEA MMZ1608Y 102BT | B | 90.1/126.1 |
| EP403 | 6910012350 | S.BEA MMZ1608Y 102BT | T | 233.2/10.4 |
| EP404 | 6910012350 | S.BEA MMZ1608Y 102BT | T | 231.9/10.4 |
| EP408 | 6910012350 | S.BEA MMZ1608Y 102BT | T | 32.1/10 |
| EP409 | 6910012350 | S.BEA MMZ1608Y 102BT | T | 30.8/10 |
| EP414 | 6910012350 | S.BEA MMZ1608Y 102BT | T | 9.9/34 |
| EP415 | 6910012350 | S.BEA MMZ1608Y 102BT | B | 9.9/31 |
| EP416 | 6910012350 | S.BEA MMZ1608Y 102BT | B | 10.2/95 |
| EP417 | 6910012350 | S.BEA MMZ1608Y 102BT | T | 10.2/96.2 |
| EP420 | 6910012350 | S.BEA MMZ1608Y 102BT | B | 10.1/101.2 |
| EP421 | 6910012350 | S.BEA MMZ1608Y 102BT | T | 10.1/102.2 |
| EP430 | 6910012350 | S.BEA MMZ1608Y 102BT | B | 5.8/68.9 |
| EP431 | 6910012350 | S.BEA MMZ1608Y 102BT | B | 5.8/70.9 |
| EP432 | 6910012350 | S.BEA MMZ1608Y 102BT | B | 5.8/72.9 |
| EP501 | 9088000010 | TUB IRRAX 1.5 (d) L=12 mm | | |
| EP901 | 6910015970 | S.BEA MMZ1608B 301CT-AS | B | 106.7/15.4 |
| EP905 | 6910012350 | S.BEA MMZ1608Y 102BT | B | 121.2/5.8 |
| EP907 | 6910012350 | S.BEA MMZ1608Y 102BT | B | 119.2/5.8 |

## [DSP-A BOARD]

| REF NO. | ORDER NO. | DESCRIPTION | M. | H/V LOCATION |
|---|---|---|---|---|
| IC1 | 1140012211 | S.IC TMS320C6713BZDP225 | T | 28.1/20.4 |
| IC151 | 1130008361 | S.IC TC7SHU04FU (TE85L,JF) | B | 45.5/8.1 |
| IC171 | 1130008041 | S.IC TC7SH04FU(TE85L,JF) | T | 41.3/4.6 |
| IC181 | 1130011150 | S.IC SN74AHC2G08HDCTR | T | 30.2/1.9 |
| IC191 | 1130011150 | S.IC SN74AHC2G08HDCTR | T | 24/3.5 |
| IC201 | 1130012199 | S.IC AT29LV040A-15TU | B | 29/42 |
| IC203 | 1110006411 | S.IC R3111N111A-TR-F | T | 30/36.5 |
| IC301 | 1110006100 | S.IC NJM5534MD-TE1 | T | 72.3/44.7 |
| IC331 | 1130009981 | S.IC TC7W53FK (TE85L,F) | T | 76.9/34.1 |
| IC341 | 1110006100 | S.IC NJM5534MD-TE1 | T | 70.3/35.5 |
| IC371 | 1110006100 | S.IC NJM5534MD-TE1 | T | 59.4/44.3 |
| IC401 | 1110006111 | S.IC AK5394AVSP/P | T | 54.2/31 |
| IC451 | 1130006891 | S.IC TC7S04FU (TE85R,F) | T | 43.5/41 |
| IC452 | 1130012160 | S.IC SN74LVC1GU04DCKR | T | 42.8/38.5 |
| IC501 | 1110001901 | S.IC µPC4570G2-T1-A | T | 71.6/27.4 |
| IC551 | 1130013090 | S.IC AK4396VFP-E2/P | T | 54.6/7.3 |
| IC601 | 1110006100 | S.IC NJM5534MD-TE1 | T | 63.6/17.3 |
| IC651 | 1110006100 | S.IC NJM5534MD-TE1 | T | 66.8/7.2 |
| IC701 | 1110006100 | S.IC NJM5534MD-TE1 | T | 74.1/17.5 |
| IC771 | 1110004770 | S.IC BU9480F-E2 | T | 51.7/18.4 |
| Q1 | 1590000680 | S.TR DTC114EUA T106 | T | 45.7/16.5 |
| D501 | 1730002320 | S.ZEN MA8051-M (TX) | B | 76.5/29.5 |
| FI101 | 2040000790 | S.LC EXCCET103U | T | 36.5/2.8 |
| X151 | 6050011660 | S.XTL CR-754 (30.000 MHz) | B | 40.5/2.9 |
| L1 | 6200003950 | S.COL HF50ACC 322513-T | B | 43.2/34.8 |
| L2 | 6180003501 | S.COL SLF6028T-100M1R3-PF | B | 13.6/35.7 |
| L3 | 6200003640 | S.COL MLF1608E 100K-T | B | 12.2/8.2 |
| L401 | 6200003950 | S.COL HF50ACC 322513-T | T | 49.3/42.9 |
| L921 | 6200003950 | S.COL HF50ACC 322513-T | T | 73.7/4.4 |
| L922 | 6200003950 | S.COL HF50ACC 322513-T | T | 77.9/9.5 |
| L924 | 6200003950 | S.COL HF50ACC 322513-T | T | 74.1/9.5 |
| L925 | 6200003950 | S.COL HF50ACC 322513-T | T | 77.5/4.4 |
| L961 | 6200003950 | S.COL HF50ACC 322513-T | B | 11.3/12.2 |
| L962 | 6200003950 | S.COL HF50ACC 322513-T | B | 12.8/24.6 |
| R1 | 7030003560 | S.RES ERJ3GEYJ 103 V (10 k) | B | 42.5/22.3 |
| R2 | 7030003560 | S.RES ERJ3GEYJ 103 V (10 k) | B | 41.8/24.2 |
| R3 | 7030003560 | S.RES ERJ3GEYJ 103 V (10 k) | B | 42.5/21 |
| R4 | 7030003560 | S.RES ERJ3GEYJ 103 V (10 k) | B | 41.8/13.7 |
| R5 | 7030003440 | S.RES ERJ3GEYJ 102 V (1 k) | B | 23.2/6 |
| R6 | 7030003440 | S.RES ERJ3GEYJ 102 V (1 k) | B | 21.9/6 |
| R7 | 7030003640 | S.RES ERJ3GEYJ 473 V (47 k) | B | 20/6.7 |
| R8 | 7030003440 | S.RES ERJ3GEYJ 102 V (1 k) | B | 14.1/8.2 |
| R9 | 7030003640 | S.RES ERJ3GEYJ 473 V (47 k) | B | 14.5/11.6 |
| R10 | 7030003640 | S.RES ERJ3GEYJ 473 V (47 k) | T | 43.8/13.1 |
| R11 | 7030003460 | S.RES ERJ3GEYJ 152 V (1.5 k) | B | 48.2/9.7 |
| R12 | 7030003560 | S.RES ERJ3GEYJ 103 V (10 k) | B | 26.8/13.3 |
| R151 | 7030003320 | S.RES ERJ3GEYJ 101 V (100) | T | 44.3/5.3 |
| R152 | 7030003800 | S.RES ERJ3GEYJ 105 V (1 M) | B | 43.5/6.2 |
| R171 | 7030003320 | S.RES ERJ3GEYJ 101 V (100) | T | 41.3/1.4 |
| R181 | 7030003560 | S.RES ERJ3GEYJ 103 V (10 k) | T | 9.1/7 |
| R182 | 7030003560 | S.RES ERJ3GEYJ 103 V (10 k) | T | 6.3/7 |
| R183 | 7030003560 | S.RES ERJ3GEYJ 103 V (10 k) | T | 11.9/8.3 |
| R184 | 7030003560 | S.RES ERJ3GEYJ 103 V (10 k) | T | 11.9/7 |
| R201 | 7030003860 | S.RES ERJ3GE JPW V | T | 30.8/39.2 |
| R301 | 7030003860 | S.RES ERJ3GE JPW V | T | 79.5/38.4 |
| R302 | 7030009591 | S.RES ERA3YED 472V (4.7 k) | T | 77.6/46.9 |
| R303 | 7030009591 | S.RES ERA3YED 472V (4.7 k) | T | 75.7/46.1 |
| R304 | 7030003320 | S.RES ERJ3GEYJ 101 V (100) | T | 78.1/40.7 |
| R305 | 7030003860 | S.RES ERJ3GE JPW V | T | 75.7/43.5 |
| R306 | 7030003320 | S.RES ERJ3GEYJ 101 V (100) | T | 68.9/46.1 |
| R331 | 7030003500 | S.RES ERJ3GEYJ 332 V (3.3 k) | T | 64.4/39.9 |
| R332 | 7030003480 | S.RES ERJ3GEYJ 222 V (2.2 k) | T | 65.7/39.9 |
| R333 | 7030003640 | S.RES ERJ3GEYJ 473 V (47 k) | T | 75/33.2 |
| R341 | 7030003320 | S.RES ERJ3GEYJ 101 V (100) | T | 73.7/34.8 |
| R342 | 7030003320 | S.RES ERJ3GEYJ 101 V (100) | T | 66.9/37.3 |
| R343 | 7030006601 | S.RES ERA3YED 272V (2.7 k) | T | 73.7/37.4 |
| R344 | 7030010390 | S.RES ERA3YED 821V (820) | T | 65.6/33.6 |
| R345 | 7030009691 | S.RES ERA3YED 101V (100) | T | 66.2/31.7 |
| R371 | 7030003320 | S.RES ERJ3GEYJ 101 V (100) | T | 63.4/43.8 |
| R372 | 7030003320 | S.RES ERJ3GEYJ 101 V (100) | T | 55.3/46.3 |
| R373 | 7030006601 | S.RES ERA3YED 272V (2.7 k) | T | 63.4/45.6 |
| R374 | 7030010390 | S.RES ERA3YED 821V (820) | T | 54.7/41.8 |
| R375 | 7030009691 | S.RES ERA3YED 101V (100) | T | 56/40.5 |
| R401 | 7030009591 | S.RES ERA3YED 472V (4.7 k) | T | 53.1/42.5 |
| R402 | 7030009591 | S.RES ERA3YED 472V (4.7 k) | T | 51.8/44 |
| R403 | 7030003640 | S.RES ERJ3GEYJ 473 V (47 k) | T | 54.1/38.7 |
| R404 | 7030003200 | S.RES ERJ3GEYJ 100 V (10) | T | 50/40 |
| R405 | 7030003320 | S.RES ERJ3GEYJ 101 V (100) | T | 51.1/38.1 |
| R406 | 7030003640 | S.RES ERJ3GEYJ 473 V (47 k) | T | 49.8/38.1 |
| R407 | 7030003460 | S.RES ERJ3GEYJ 152 V (1.5 k) | B | 46.8/36 |

M.=Mounted side (T: Mounted on the Top side, B: Mounted on the Bottom side)
S.=Surface mount

## [DSP-A BOARD]

| REF NO. | ORDER NO. | DESCRIPTION | M. | H/V LOCATION |
|---|---|---|---|---|
| R409 | 7030003640 | S.RES ERJ3GEYJ 473 V (47 k) | T | 52.3/23.8 |
| R410 | 7030003640 | S.RES ERJ3GEYJ 473 V (47 k) | T | 47.2/23.8 |
| R411 | 7030003640 | S.RES ERJ3GEYJ 473 V (47 k) | T | 49.8/23.8 |
| R412 | 7030003520 | S.RES ERJ3GEYJ 472 V (4.7 k) | T | 56/22.3 |
| R413 | 7030003520 | S.RES ERJ3GEYJ 472 V (4.7 k) | T | 54.1/21.9 |
| R451 | 7030003800 | S.RES ERJ3GEYJ 105 V (1 M) | T | 42.6/36.6 |
| R501 | 7030006521 | S.RES ERA3YED 561V (560) | T | 76.1/29.9 |
| R502 | 7030003360 | S.RES ERJ3GEYJ 221 V (220) | T | 70.3/23.4 |
| R503 | 7030003380 | S.RES ERJ3GEYJ 331 V (330) | T | 65.3/28.9 |
| R504 | 7030003680 | S.RES ERJ3GEYJ 104 V (100 k) | T | 65.3/27.6 |
| R551 | 7030003320 | S.RES ERJ3GEYJ 101 V (100) | T | 49.5/8.6 |
| R559 | 7030003640 | S.RES ERJ3GEYJ 473 V (47 k) | T | 59.8/10.5 |
| R601 | 7030006521 | S.RES ERA3YED 561V (560) | T | 63.1/20.7 |
| R602 | 7030007661 | S.RES ERA3YED 331V (330) | T | 64/22 |
| R603 | 7030007661 | S.RES ERA3YED 331V (330) | T | 59/19.8 |
| R604 | 7030009961 | S.RES ERA3YED 221V (220) | T | 68.7/21 |
| R605 | 7030007661 | S.RES ERA3YED 331V (330) | T | 65.7/20.7 |
| R606 | 7030003320 | S.RES ERJ3GEYJ 101 V (100) | T | 67.1/13.9 |
| R607 | 7030003320 | S.RES ERJ3GEYJ 101 V (100) | T | 61.9/13.9 |
| R651 | 7030006521 | S.RES ERA3YED 561V (560) | T | 64.3/10.6 |
| R652 | 7030007661 | S.RES ERA3YED 331V (330) | T | 65.3/11.9 |
| R653 | 7030007661 | S.RES ERA3YED 331V (330) | T | 62.1/10.1 |
| R654 | 7030009961 | S.RES ERA3YED 221V (220) | T | 69.5/10.6 |
| R655 | 7030007661 | S.RES ERA3YED 331V (330) | T | 66.9/10.6 |
| R658 | 7030003320 | S.RES ERJ3GEYJ 101 V (100) | T | 67.7/3.8 |
| R659 | 7030003320 | S.RES ERJ3GEYJ 101 V (100) | T | 64/3.8 |
| R701 | 7030010770 | S.RES ERA3YED 681V (680) | T | 71.3/21 |
| R702 | 7030009861 | S.RES ERA3YED 471V (470) | T | 74.8/22.7 |
| R703 | 7030010770 | S.RES ERA3YED 681V (680) | T | 70.5/13.5 |
| R704 | 7030009861 | S.RES ERA3YED 471V (470) | T | 77.2/13.3 |
| R705 | 7030009691 | S.RES ERA3YED 101V (100) | T | 77.4/22.2 |
| R706 | 7030003320 | S.RES ERJ3GEYJ 101 V (100) | T | 77.3/20.9 |
| R707 | 7030003320 | S.RES ERJ3GEYJ 101 V (100) | T | 74.1/14.1 |
| R801 | 7030003650 | S.RES ERJ3GEYJ 563 V (56 k) | T | 78/27.2 |
| R802 | 7030003680 | S.RES ERJ3GEYJ 104 V (100 k) | T | 78/25.9 |
| R803 | 7030003480 | S.RES ERJ3GEYJ 222 V (2.2 k) | T | 78.7/24 |
| R804 | 7030003490 | S.RES ERJ3GEYJ 272 V (2.7 k) | T | 78/29.8 |
| R805 | 7030003340 | S.RES ERJ3GEYJ 151 V (150) | T | 78/28.5 |
| R901 | 7030003860 | S.RES ERJ3GE JPW V | T | 46.6/21 |
| R962 | 7030003320 | S.RES ERJ3GEYJ 101 V (100) | T | 12.1/16.8 |
| R963 | 7030003320 | S.RES ERJ3GEYJ 101 V (100) | T | 11.9/15.5 |
| R964 | 7030003320 | S.RES ERJ3GEYJ 101 V (100) | T | 11.9/14.2 |
| R965 | 7030003320 | S.RES ERJ3GEYJ 101 V (100) | T | 11.9/12.9 |
| R967 | 7030003320 | S.RES ERJ3GEYJ 101 V (100) | T | 13.6/37.8 |
| R968 | 7030003320 | S.RES ERJ3GEYJ 101 V (100) | T | 11.9/11.6 |
| R969 | 7030003320 | S.RES ERJ3GEYJ 101 V (100) | T | 13.6/48.2 |
| R970 | 7030003320 | S.RES ERJ3GEYJ 101 V (100) | T | 13.6/46.9 |
| R971 | 7030003320 | S.RES ERJ3GEYJ 101 V (100) | T | 13.6/45.6 |
| R972 | 7030003320 | S.RES ERJ3GEYJ 101 V (100) | T | 13.6/44.3 |
| R973 | 7030003320 | S.RES ERJ3GEYJ 101 V (100) | T | 13.6/43 |
| R974 | 7030003320 | S.RES ERJ3GEYJ 101 V (100) | T | 13.6/41.7 |
| R975 | 7030003320 | S.RES ERJ3GEYJ 101 V (100) | T | 13.6/40.4 |
| R976 | 7030003320 | S.RES ERJ3GEYJ 101 V (100) | T | 13.6/39.1 |
| | | | | |
| C1 | 4030011600 | S.CER C1608 JB 1E 104K-T | B | 15.2/30.5 |
| C2 | 4030011600 | S.CER C1608 JB 1E 104K-T | B | 41.8/30.7 |
| C3 | 4030011600 | S.CER C1608 JB 1E 104K-T | B | 18/32.9 |
| C4 | 4030011600 | S.CER C1608 JB 1E 104K-T | B | 39.4/32.9 |
| C5 | 4030011600 | S.CER C1608 JB 1E 104K-T | B | 23/26.3 |
| C6 | 4030011600 | S.CER C1608 JB 1E 104K-T | B | 24.3/26.3 |
| C7 | 4030011600 | S.CER C1608 JB 1E 104K-T | B | 28.6/26.3 |
| C8 | 4030011600 | S.CER C1608 JB 1E 104K-T | B | 29.9/26.3 |
| C9 | 4030011600 | S.CER C1608 JB 1E 104K-T | B | 33.8/26.3 |
| C10 | 4030011600 | S.CER C1608 JB 1E 104K-T | B | 21.5/23.3 |
| C11 | 4030011600 | S.CER C1608 JB 1E 104K-T | B | 36/23.7 |
| C12 | 4030011600 | S.CER C1608 JB 1E 104K-T | T | 13.7/21 |
| C13 | 4030011600 | S.CER C1608 JB 1E 104K-T | B | 22.2/20.2 |
| C14 | 4030011600 | S.CER C1608 JB 1E 104K-T | B | 36/21.1 |
| C15 | 4030011600 | S.CER C1608 JB 1E 104K-T | B | 22.2/18.9 |
| C16 | 4030011600 | S.CER C1608 JB 1E 104K-T | B | 36/18.5 |
| C17 | 4030011600 | S.CER C1608 JB 1E 104K-T | T | 43.5/20 |
| C18 | 4030011600 | S.CER C1608 JB 1E 104K-T | B | 22.2/15.2 |
| C19 | 4030011600 | S.CER C1608 JB 1E 104K-T | B | 34.7/14.4 |
| C20 | 4030011600 | S.CER C1608 JB 1E 104K-T | B | 23.1/13.3 |
| C21 | 4030011600 | S.CER C1608 JB 1E 104K-T | B | 24.4/13.3 |
| C22 | 4030011600 | S.CER C1608 JB 1E 104K-T | B | 28.1/13.3 |
| C23 | 4030011600 | S.CER C1608 JB 1E 104K-T | B | 32.6/12.6 |
| C24 | 4030011600 | S.CER C1608 JB 1E 104K-T | B | 35.2/12.6 |
| C25 | 4030011600 | S.CER C1608 JB 1E 104K-T | B | 17.3/6.7 |
| C26 | 4030011600 | S.CER C1608 JB 1E 104K-T | B | 33.1/6.8 |
| C27 | 4030011600 | S.CER C1608 JB 1E 104K-T | B | 41.8/11.1 |
| C28 | 4030011600 | S.CER C1608 JB 1E 104K-T | B | 15.4/8.2 |
| C29 | 4030011600 | S.CER C1608 JB 1E 104K-T | B | 40.9/6.8 |
| C30 | 4030011600 | S.CER C1608 JB 1E 104K-T | T | 35.2/5 |
| C31 | 4030011600 | S.CER C1608 JB 1E 104K-T | T | 28.5/5.2 |
| C32 | 4030011600 | S.CER C1608 JB 1E 104K-T | T | 37.8/5 |
| C33 | 4030011600 | S.CER C1608 JB 1E 104K-T | T | 18.5/35.2 |
| C34 | 4030011600 | S.CER C1608 JB 1E 104K-T | T | 36.4/35 |
| C35 | 4030011600 | S.CER C1608 JB 1E 104K-T | B | 26/32.9 |
| C36 | 4030011600 | S.CER C1608 JB 1E 104K-T | B | 29.3/32.9 |
| C37 | 4030011600 | S.CER C1608 JB 1E 104K-T | B | 36.8/32.9 |

## [DSP-A BOARD]

| REF NO. | ORDER NO. | DESCRIPTION | M. | H/V LOCATION |
|---|---|---|---|---|
| C38 | 4030011600 | S.CER C1608 JB 1E 104K-T | B | 15.2/27.9 |
| C39 | 4030011600 | S.CER C1608 JB 1E 104K-T | B | 22.4/32.9 |
| C40 | 4030011600 | S.CER C1608 JB 1E 104K-T | B | 26/26.3 |
| C41 | 4030011600 | S.CER C1608 JB 1E 104K-T | B | 21.7/26.3 |
| C42 | 4030011600 | S.CER C1608 JB 1E 104K-T | B | 27.3/26.3 |
| C43 | 4030011600 | S.CER C1608 JB 1E 104K-T | B | 32.5/26.3 |
| C44 | 4030011600 | S.CER C1608 JB 1E 104K-T | B | 35.1/26.3 |
| C45 | 4030011600 | S.CER C1608 JB 1E 104K-T | B | 41.8/26.8 |
| C46 | 4030011600 | S.CER C1608 JB 1E 104K-T | B | 15.3/24.9 |
| C47 | 4030011600 | S.CER C1608 JB 1E 104K-T | T | 43.5/29 |
| C48 | 4030011600 | S.CER C1608 JB 1E 104K-T | B | 22.2/21.5 |
| C49 | 4030011600 | S.CER C1608 JB 1E 104K-T | B | 41.8/17.9 |
| C50 | 4030011600 | S.CER C1608 JB 1E 104K-T | B | 22.2/17.6 |
| C51 | 4030011600 | S.CER C1608 JB 1E 104K-T | B | 36/15.9 |
| C52 | 4030011600 | S.CER C1608 JB 1E 104K-T | B | 15.8/11.6 |
| C53 | 4030011600 | S.CER C1608 JB 1E 104K-T | B | 21.8/13.3 |
| C54 | 4030011600 | S.CER C1608 JB 1E 104K-T | T | 42.9/9.9 |
| C55 | 4030011600 | S.CER C1608 JB 1E 104K-T | B | 29.4/13.3 |
| C56 | 4030011600 | S.CER C1608 JB 1E 104K-T | B | 25/6.7 |
| C57 | 4030011600 | S.CER C1608 JB 1E 104K-T | B | 29.8/6.8 |
| C58 | 4030011600 | S.CER C1608 JB 1E 104K-T | B | 38.3/6.8 |
| C59 | 4030011600 | S.CER C1608 JB 1E 104K-T | T | 20.3/5.3 |
| C60 | 4510007130 | S.ELE EEFCD 0J 470R | T | 19.6/44 |
| C61 | 4550007480 | S.TAN F930J106MAABMA | B | 44.8/29.7 |
| C62 | 4510007130 | S.ELE EEFCD 0J 470R | T | 25.7/43.9 |
| C101 | 4030011600 | S.CER C1608 JB 1E 104K-T | B | 35.7/6.8 |
| C102 | 4550007480 | S.TAN F930J106MAABMA | B | 30.6/2.6 |
| C151 | 4030011600 | S.CER C1608 JB 1E 104K-T | B | 45.6/10 |
| C152 | 4030007030 | S.CER C1608 CH 1H 150J-T | B | 46.1/6.2 |
| C153 | 4030007030 | S.CER C1608 CH 1H 150J-T | B | 43.1/8 |
| C171 | 4030011600 | S.CER C1608 JB 1E 104K-T | T | 41.3/2.7 |
| C181 | 4030011600 | S.CER C1608 JB 1E 104K-T | T | 31/4.3 |
| C191 | 4030011600 | S.CER C1608 JB 1E 104K-T | T | 22.6/1.2 |
| C201 | 4030011600 | S.CER C1608 JB 1E 104K-T | B | 41.4/43.3 |
| C301 | 4340000250 | S.MLR ECHU 1C 104JX5 | T | 77.9/44 |
| C302 | 4550007500 | S.TAN F931D106MBABMA | B | 76.5/43.7 |
| C303 | 4030011600 | S.CER C1608 JB 1E 104K-T | T | 75.6/40.9 |
| C304 | 4550007500 | S.TAN F931D106MBABMA | B | 71.7/43.7 |
| C305 | 4030011600 | S.CER C1608 JB 1E 104K-T | T | 67.6/46.1 |
| C306 | 4030007050 | S.CER C1608 CH 1H 220J-T | T | 72.4/40.1 |
| C331 | 4030011600 | S.CER C1608 JB 1E 104K-T | T | 78.8/32.8 |
| C332 | 4550007520 | S.TAN F931A106MAABMA | B | 67.9/35.2 |
| C333 | 4030011600 | S.CER C1608 JB 1E 104K-T | T | 79.5/35.8 |
| C341 | 4550007500 | S.TAN F931D106MBABMA | B | 73.1/32.4 |
| C342 | 4030011600 | S.CER C1608 JB 1E 104K-T | T | 73.7/31.6 |
| C343 | 4550007500 | S.TAN F931D106MBABMA | B | 73.2/38.1 |
| C344 | 4030011600 | S.CER C1608 JB 1E 104K-T | T | 65.6/37.3 |
| C345 | 4340000250 | S.MLR ECHU 1C 104JX5 | T | 76.7/38.1 |
| C346 | 4030018580 | S.CER C1608 CH 1H 821J-T | T | 66.9/33.6 |
| C347 | 4030011600 | S.CER C1608 JB 1E 104K-T | T | 66.1/35.5 |
| C348 | 4030007050 | S.CER C1608 CH 1H 220J-T | T | 70.9/30.9 |
| C371 | 4550007500 | S.TAN F931D106MBABMA | B | 59.8/43.8 |
| C372 | 4030011600 | S.CER C1608 JB 1E 104K-T | T | 63.4/42.5 |
| C373 | 4550007500 | S.TAN F931D106MBABMA | B | 50.1/43.9 |
| C374 | 4030011600 | S.CER C1608 JB 1E 104K-T | T | 53.4/45.5 |
| C375 | 4340000250 | S.MLR ECHU 1C 104JX5 | T | 68.1/42.6 |
| C376 | 4030018580 | S.CER C1608 CH 1H 821J-T | T | 56/43.1 |
| C377 | 4030011600 | S.CER C1608 JB 1E 104K-T | T | 55.3/45 |
| C378 | 4030007050 | S.CER C1608 CH 1H 220J-T | T | 59.4/39.5 |
| C401 | 4550007520 | S.TAN F931A106MAABMA | B | 54.9/43.8 |
| C402 | 4030017840 | S.CER C2012 CH 1H 222J-T | T | 58.1/37.6 |
| C403 | 4550007480 | S.TAN F930J106MAABMA | B | 63.1/35.2 |
| C404 | 4030011810 | S.CER C1608 JB 1A 224K-T | T | 61.5/37.4 |
| C405 | 4550007480 | S.TAN F930J106MAABMA | B | 58.3/35.2 |
| C406 | 4030011810 | S.CER C1608 JB 1A 224K-T | T | 63.5/36.7 |
| C407 | 4550007480 | S.TAN F930J106MAABMA | B | 50.4/36.1 |
| C408 | 4030011600 | S.CER C1608 JB 1E 104K-T | T | 54.1/37.4 |
| C409 | 4030011600 | S.CER C1608 JB 1E 104K-T | T | 54.1/23.2 |
| C410 | 4030009000 | S.CER C2012 JB 1C 224K-T | T | 62.1/24.2 |
| C411 | 4550007480 | S.TAN F930J106MAABMA | B | 63.1/28.4 |
| C412 | 4550007480 | S.TAN F930J106MAABMA | B | 58.3/29.1 |
| C413 | 4030009000 | S.CER C2012 JB 1C 224K-T | T | 59/22.5 |
| C414 | 4030011600 | S.CER C1608 JB 1E 104K-T | T | 54.1/24.5 |
| C415 | 4550007520 | S.TAN F931A106MAABMA | B | 53/26.5 |
| C416 | 4550007520 | S.TAN F931A106MAABMA | B | 53/31.3 |
| C417 | 4030017840 | S.CER C2012 CH 1H 222J-T | T | 58/24.2 |
| C450 | 4030011600 | S.CER C1608 JB 1E 104K-T | T | 43.1/35.3 |
| C451 | 4030011600 | S.CER C1608 JB 1E 104K-T | T | 43.6/42.9 |
| C452 | 4030006860 | S.CER C1608 JB 1H 102K-T | T | 40.8/39.6 |
| C501 | 4030011600 | S.CER C1608 JB 1E 104K-T | T | 74.8/24 |
| C502 | 4550007500 | S.TAN F931D106MBABMA | B | 77.5/33.1 |
| C503 | 4030011600 | S.CER C1608 JB 1E 104K-T | T | 71.6/23.4 |
| C504 | 4550007500 | S.TAN F931D106MBABMA | B | 67.9/29.1 |
| C506 | 4030007090 | S.CER C1608 CH 1H 470J-T | T | 67.1/28.4 |
| C507 | 4030007090 | S.CER C1608 CH 1H 470J-T | T | 76.1/27.3 |
| C551 | 4550007520 | S.TAN F931A106MAABMA | B | 50.3/8.7 |
| C552 | 4030011600 | S.CER C1608 JB 1E 104K-T | T | 49.5/5.5 |
| C553 | 4550007520 | S.TAN F931A106MAABMA | B | 55/13.3 |
| C554 | 4030011600 | S.CER C1608 JB 1E 104K-T | T | 60/7.6 |
| C555 | 4030011600 | S.CER C1608 JB 1E 104K-T | T | 59.8/4.6 |
| C556 | 4550007480 | S.TAN F930J106MAABMA | B | 53.6/7.1 |
| C557 | 4030011600 | S.CER C1608 JB 1E 104K-T | T | 60.7/2.8 |

M.=Mounted side (T: Mounted on the Top side, B: Mounted on the Bottom side)
S.=Surface mount

## [DSP-A BOARD]

| REF NO. | ORDER NO. | DESCRIPTION | M. | H/V LOCATION |
|---|---|---|---|---|
| C558 | 4550007520 | S.TAN F931A106MAABMA | B | 53.6/4.3 |
| C601 | 4550007480 | S.TAN F930J106MAABMA | B | 61.3/17.2 |
| C602 | 4030018510 | S.CER C2012 CH 1H 682J-T | T | 58.8/16.5 |
| C603 | 4550007500 | S.TAN F931D106MBABMA | B | 68.2/15 |
| C604 | 4030011600 | S.CER C1608 JB 1E 104K-T | T | 58.2/14.2 |
| C605 | 4030011600 | S.CER C1608 JB 1E 104K-T | T | 64.5/13.9 |
| C606 | 4550007500 | S.TAN F931D106MBABMA | B | 69.2/19.2 |
| C607 | 4030018510 | S.CER C2012 CH 1H 682J-T | T | 67/22.5 |
| C608 | 4030007050 | S.CER C1608 CH 1H 220J-T | T | 68.3/16.7 |
| C651 | 4550007480 | S.TAN F930J106MAABMA | B | 60.1/9.2 |
| C652 | 4030018510 | S.CER C2012 CH 1H 682J-T | T | 61.9/6.6 |
| C653 | 4550007500 | S.TAN F931D106MBABMA | B | 59.9/2.6 |
| C654 | 4030011600 | S.CER C1608 JB 1E 104K-T | T | 64/2.5 |
| C655 | 4030011600 | S.CER C1608 JB 1E 104K-T | T | 67.7/2.5 |
| C656 | 4550007500 | S.TAN F931D106MBABMA | B | 59.9/6 |
| C657 | 4030018510 | S.CER C2012 CH 1H 682J-T | T | 68.3/12.2 |
| C658 | 4030007050 | S.CER C1608 CH 1H 220J-T | T | 71.4/6.9 |
| C701 | 4030017840 | S.CER C2012 CH 1H 222J-T | T | 74.3/21.1 |
| C702 | 4030017840 | S.CER C2012 CH 1H 222J-T | T | 78.9/13.4 |
| C703 | 4550007500 | S.TAN F931D106MBABMA | B | 75.3/15.7 |
| C704 | 4030011600 | S.CER C1608 JB 1E 104K-T | T | 75.9/12.8 |
| C705 | 4030011600 | S.CER C1608 JB 1E 104K-T | T | 79.4/20.6 |
| C706 | 4550007500 | S.TAN F931D106MBABMA | B | 75.6/21.1 |
| C707 | 4030007050 | S.CER C1608 CH 1H 220J-T | T | 78.7/18 |
| C771 | 4550007480 | S.TAN F930J106MAABMA | B | 49.8/14.1 |
| C772 | 4030011600 | S.CER C1608 JB 1E 104K-T | T | 49.5/15 |
| C773 | 4550007480 | S.TAN F930J106MAABMA | B | 55/18.1 |
| C801 | 4030011600 | S.CER C1608 JB 1E 104K-T | T | 77.4/24 |
| C921 | 4550007510 | S.TAN F931C106MBABMA | B | 66.5/2.6 |
| C922 | 4030011600 | S.CER C1608 JB 1E 104K-T | T | 71/3.6 |
| C923 | 4550002830 | S.TAN TEESVD2 1V 685M12R | B | 78.3/6.5 |
| C924 | 4030011600 | S.CER C1608 JB 1E 104K-T | T | 80.1/8.6 |
| C925 | 4550007510 | S.TAN F931C106MBABMA | B | 67.1/10.5 |
| C926 | 4030011600 | S.CER C1608 JB 1E 104K-T | T | 71.8/12.7 |
| C927 | 4550002830 | S.TAN TEESVD2 1V 685M12R | B | 72.6/6.5 |
| C928 | 4030011600 | S.CER C1608 JB 1E 104K-T | T | 79.6/5.2 |
| C961 | 4030011600 | S.CER C1608 JB 1E 104K-T | B | 11.2/15.7 |
| C962 | 4550007520 | S.TAN F931A106MAABMA | B | 12/18.8 |
| C963 | 4030011600 | S.CER C1608 JB 1E 104K-T | B | 10.7/25.4 |
| C964 | 4550007520 | S.TAN F931A106MAABMA | B | 11.4/29.4 |
| J201 | 6510024450 | S.CNR IC197-3202-2000 | B | 29/42 |
| J921 | 6910013900 | CNR IMSA-9180S-22A | | |
| J961 | 6910012460 | CNR IMSA-9180S-30A | | |

## [DSP-B BOARD]

| REF NO. | ORDER NO. | DESCRIPTION | M. | H/V LOCATION |
|---|---|---|---|---|
| IC1 | 1140012211 | S.IC TMS320C6713BZDP225 | T | 28.1/20.4 |
| IC151 | 1130008361 | S.IC TC7SHU04FU (TE85L,JF) | B | 45.5/8.1 |
| IC171 | 1130008041 | S.IC TC7SH04FU(TE85L,JF) | T | 41.3/4.6 |
| IC181 | 1130011150 | S.IC SN74AHC2G08HDCTR | T | 30.2/1.9 |
| IC191 | 1130011150 | S.IC SN74AHC2G08HDCTR | T | 24/3.5 |
| IC201 | 1130012199 | S.IC AT29LV040A-15TU | T | 29/42 |
| IC203 | 1110006411 | S.IC R3111N111A-TR-F | T | 30/36.5 |
| IC301 | 1110006100 | S.IC NJM5534MD-TE1 | T | 72.3/44.7 |
| IC331 | 1130009981 | S.IC TC7W53FK (TE85L,F) | T | 76.9/34.1 |
| IC341 | 1110006100 | S.IC NJM5534MD-TE1 | T | 70.3/35.5 |
| IC371 | 1110006100 | S.IC NJM5534MD-TE1 | T | 59.4/44.3 |
| IC401 | 1110006111 | S.IC AK5394AVSP/P | T | 54.2/31 |
| IC451 | 1130006891 | S.IC TC7S04FU (TE85R,F) | T | 43.5/41 |
| IC452 | 1130012160 | S.IC SN74LVC1GU04DCKR | T | 42.8/38.5 |
| IC501 | 1110001901 | S.IC µPC4570G2-T1-A | T | 71.6/27.4 |
| IC551 | 1130013090 | S.IC AK4396VFP-E2/P | T | 54.6/7.3 |
| IC601 | 1110006100 | S.IC NJM5534MD-TE1 | T | 63.6/17.3 |
| IC651 | 1110006100 | S.IC NJM5534MD-TE1 | T | 66.8/7.2 |
| IC701 | 1110006100 | S.IC NJM5534MD-TE1 | T | 74.1/17.5 |
| IC771 | 1110004770 | S.IC BU9480F-E2 | T | 51.7/18.4 |
| Q1 | 1590000680 | S.TR DTC114EUA T106 | T | 45.7/16.5 |
| D501 | 1730002320 | S.ZEN MA8051-M (TX) | B | 76.5/29.5 |
| FI101 | 2040000790 | S.LC EXCCET103U | T | 36.5/2.8 |
| X151 | 6050011660 | S.XTL CR-754 (30.000 MHz) | B | 40.5/2.9 |
| L1 | 6200003950 | S.COL HF50ACC 322513-T | B | 43.2/34.8 |
| L2 | 6180003501 | S.COL SLF6028T-100M1R3-PF | B | 13.6/35.7 |
| L3 | 6200003640 | S.COL MLF1608E 100K-T | B | 12.2/8.2 |
| L401 | 6200003950 | S.COL HF50ACC 322513-T | T | 49.3/42.9 |
| L921 | 6200003950 | S.COL HF50ACC 322513-T | T | 73.7/4.4 |
| L922 | 6200003950 | S.COL HF50ACC 322513-T | T | 77.9/9.5 |
| L924 | 6200003950 | S.COL HF50ACC 322513-T | T | 74.1/9.5 |
| L925 | 6200003950 | S.COL HF50ACC 322513-T | T | 77.5/4.4 |
| L961 | 6200003950 | S.COL HF50ACC 322513-T | B | 11.3/12.2 |
| L962 | 6200003950 | S.COL HF50ACC 322513-T | B | 12.8/24.6 |
| R1 | 7030003560 | S.RES ERJ3GEYJ 103 V (10 k) | B | 42.5/22.3 |
| R2 | 7030003560 | S.RES ERJ3GEYJ 103 V (10 k) | B | 41.8/24.2 |
| R3 | 7030003560 | S.RES ERJ3GEYJ 103 V (10 k) | B | 42.5/21 |
| R4 | 7030003560 | S.RES ERJ3GEYJ 103 V (10 k) | B | 41.8/13.7 |
| R5 | 7030003440 | S.RES ERJ3GEYJ 102 V (1 k) | B | 23.2/6 |
| R6 | 7030003440 | S.RES ERJ3GEYJ 102 V (1 k) | B | 21.9/6 |
| R7 | 7030003640 | S.RES ERJ3GEYJ 473 V (47 k) | B | 20/6.7 |
| R8 | 7030003440 | S.RES ERJ3GEYJ 102 V (1 k) | B | 14.1/8.2 |
| R9 | 7030003640 | S.RES ERJ3GEYJ 473 V (47 k) | B | 14.5/11.6 |
| R10 | 7030003640 | S.RES ERJ3GEYJ 473 V (47 k) | T | 43.8/13.1 |
| R11 | 7030003460 | S.RES ERJ3GEYJ 152 V (1.5 k) | B | 48.2/9.7 |
| R12 | 7030003560 | S.RES ERJ3GEYJ 103 V (10 k) | B | 26.8/13.3 |
| R151 | 7030003320 | S.RES ERJ3GEYJ 101 V (100) | T | 44.3/5.3 |
| R152 | 7030003800 | S.RES ERJ3GEYJ 105 V (1 M) | B | 43.5/6.2 |
| R171 | 7030003320 | S.RES ERJ3GEYJ 101 V (100) | T | 41.3/1.4 |
| R181 | 7030003560 | S.RES ERJ3GEYJ 103 V (10 k) | T | 9.1/7 |
| R182 | 7030003560 | S.RES ERJ3GEYJ 103 V (10 k) | T | 6.3/7 |
| R183 | 7030003560 | S.RES ERJ3GEYJ 103 V (10 k) | T | 11.9/8.3 |
| R184 | 7030003560 | S.RES ERJ3GEYJ 103 V (10 k) | T | 11.9/7 |
| R201 | 7030003860 | S.RES ERJ3GE JPW V | T | 30.8/39.2 |
| R301 | 7030003860 | S.RES ERJ3GE JPW V | T | 79.5/38.4 |
| R302 | 7030009591 | S.RES ERA3YED 472V (4.7 k) | T | 77.6/46.9 |
| R303 | 7030009591 | S.RES ERA3YED 472V (4.7 k) | T | 75.7/46.1 |
| R304 | 7030003320 | S.RES ERJ3GEYJ 101 V (100) | T | 78.1/40.7 |
| R305 | 7030003860 | S.RES ERJ3GE JPW V | T | 75.7/43.5 |
| R306 | 7030003320 | S.RES ERJ3GEYJ 101 V (100) | T | 68.9/46.1 |
| R331 | 7030003500 | S.RES ERJ3GEYJ 332 V (3.3 k) | T | 64.4/39.9 |
| R332 | 7030003480 | S.RES ERJ3GEYJ 222 V (2.2 k) | T | 65.7/39.9 |
| R333 | 7030003640 | S.RES ERJ3GEYJ 473 V (47 k) | T | 75/33.2 |
| R341 | 7030003320 | S.RES ERJ3GEYJ 101 V (100) | T | 73.7/34.8 |
| R342 | 7030003320 | S.RES ERJ3GEYJ 101 V (100) | T | 66.9/37.3 |
| R343 | 7030006601 | S.RES ERA3YED 272V (2.7 k) | T | 73.7/37.4 |
| R344 | 7030010390 | S.RES ERA3YED 821V (820) | T | 65.6/33.6 |
| R345 | 7030009691 | S.RES ERA3YED 101V (100) | T | 66.2/31.7 |
| R371 | 7030003320 | S.RES ERJ3GEYJ 101 V (100) | T | 63.4/43.8 |
| R372 | 7030003320 | S.RES ERJ3GEYJ 101 V (100) | T | 55.3/46.3 |
| R373 | 7030006601 | S.RES ERA3YED 272V (2.7 k) | T | 63.4/45.6 |
| R374 | 7030010390 | S.RES ERA3YED 821V (820) | T | 54.7/41.8 |
| R375 | 7030009691 | S.RES ERA3YED 101V (100) | T | 56/40.5 |
| R401 | 7030009591 | S.RES ERA3YED 472V (4.7 k) | T | 53.1/42.5 |
| R402 | 7030009591 | S.RES ERA3YED 472V (4.7 k) | T | 51.8/44 |
| R403 | 7030003640 | S.RES ERJ3GEYJ 473 V (47 k) | T | 54.1/38.7 |
| R404 | 7030003200 | S.RES ERJ3GEYJ 100 V (10) | T | 50/40 |
| R405 | 7030003320 | S.RES ERJ3GEYJ 101 V (100) | T | 51.1/38.1 |
| R406 | 7030003640 | S.RES ERJ3GEYJ 473 V (47 k) | T | 49.8/38.1 |
| R407 | 7030003460 | S.RES ERJ3GEYJ 152 V (1.5 k) | B | 46.8/36 |

M.=Mounted side (T: Mounted on the Top side, B: Mounted on the Bottom side)
S.=Surface mount

## [DSP-B BOARD]

| REF NO. | ORDER NO. | DESCRIPTION | M. | H/V LOCATION |
|---|---|---|---|---|
| R409 | 7030003640 | S.RES ERJ3GEYJ 473 V (47 k) | T | 52.3/23.8 |
| R410 | 7030003640 | S.RES ERJ3GEYJ 473 V (47 k) | T | 47.2/23.8 |
| R411 | 7030003640 | S.RES ERJ3GEYJ 473 V (47 k) | T | 49.8/23.8 |
| R412 | 7030003520 | S.RES ERJ3GEYJ 472 V (4.7 k) | T | 56/22.3 |
| R413 | 7030003520 | S.RES ERJ3GEYJ 472 V (4.7 k) | T | 54.1/21.9 |
| R451 | 7030003800 | S.RES ERJ3GEYJ 105 V (1 M) | T | 42.6/36.6 |
| R501 | 7030006521 | S.RES ERA3YED 561V (560) | T | 76.1/29.9 |
| R502 | 7030003360 | S.RES ERJ3GEYJ 221 V (220) | T | 70.3/23.4 |
| R503 | 7030003380 | S.RES ERJ3GEYJ 331 V (330) | T | 65.3/28.9 |
| R504 | 7030003680 | S.RES ERJ3GEYJ 104 V (100 k) | T | 65.3/27.6 |
| R551 | 7030003320 | S.RES ERJ3GEYJ 101 V (100) | T | 49.5/8.6 |
| R559 | 7030003640 | S.RES ERJ3GEYJ 473 V (47 k) | T | 59.8/10.5 |
| R601 | 7030006521 | S.RES ERA3YED 561V (560) | T | 63.1/20.7 |
| R602 | 7030007661 | S.RES ERA3YED 331V (330) | T | 64/22 |
| R603 | 7030007661 | S.RES ERA3YED 331V (330) | T | 59/19.8 |
| R604 | 7030009961 | S.RES ERA3YED 221V (220) | T | 68.7/21 |
| R605 | 7030007661 | S.RES ERA3YED 331V (330) | T | 65.7/20.7 |
| R606 | 7030003320 | S.RES ERJ3GEYJ 101 V (100) | T | 67.1/13.9 |
| R607 | 7030003320 | S.RES ERJ3GEYJ 101 V (100) | T | 61.9/13.9 |
| R651 | 7030006521 | S.RES ERA3YED 561V (560) | T | 64.3/10.6 |
| R652 | 7030007661 | S.RES ERA3YED 331V (330) | T | 65.3/11.9 |
| R653 | 7030007661 | S.RES ERA3YED 331V (330) | T | 62.1/10.1 |
| R654 | 7030009961 | S.RES ERA3YED 221V (220) | T | 69.5/10.6 |
| R655 | 7030007661 | S.RES ERA3YED 331V (330) | T | 66.9/10.6 |
| R658 | 7030003320 | S.RES ERJ3GEYJ 101 V (100) | T | 67.7/3.8 |
| R659 | 7030003320 | S.RES ERJ3GEYJ 101 V (100) | T | 64/3.8 |
| R701 | 7030010770 | S.RES ERA3YED 681V (680) | T | 71.3/21 |
| R702 | 7030009861 | S.RES ERA3YED 471V (470) | T | 74.8/22.7 |
| R703 | 7030010770 | S.RES ERA3YED 681V (680) | T | 70.5/13.5 |
| R704 | 7030009861 | S.RES ERA3YED 471V (470) | T | 77.2/13.3 |
| R705 | 7030009691 | S.RES ERA3YED 101V (100) | T | 77.4/22.2 |
| R706 | 7030003320 | S.RES ERJ3GEYJ 101 V (100) | T | 77.3/20.9 |
| R707 | 7030003320 | S.RES ERJ3GEYJ 101 V (100) | T | 74.1/14.1 |
| R801 | 7030003650 | S.RES ERJ3GEYJ 563 V (56 k) | T | 78/27.2 |
| R802 | 7030003680 | S.RES ERJ3GEYJ 104 V (100 k) | T | 78/25.9 |
| R803 | 7030003480 | S.RES ERJ3GEYJ 222 V (2.2 k) | T | 78.7/24 |
| R804 | 7030003490 | S.RES ERJ3GEYJ 272 V (2.7 k) | T | 78/29.8 |
| R805 | 7030003340 | S.RES ERJ3GEYJ 151 V (150) | T | 78/28.5 |
| R901 | 7030003860 | S.RES ERJ3GE JPW V | T | 46.6/21 |
| R962 | 7030003320 | S.RES ERJ3GEYJ 101 V (100) | T | 12.1/16.8 |
| R963 | 7030003320 | S.RES ERJ3GEYJ 101 V (100) | T | 11.9/15.5 |
| R964 | 7030003320 | S.RES ERJ3GEYJ 101 V (100) | T | 11.9/14.2 |
| R965 | 7030003320 | S.RES ERJ3GEYJ 101 V (100) | T | 11.9/12.9 |
| R967 | 7030003320 | S.RES ERJ3GEYJ 101 V (100) | T | 13.6/37.8 |
| R968 | 7030003320 | S.RES ERJ3GEYJ 101 V (100) | T | 11.9/11.6 |
| R969 | 7030003320 | S.RES ERJ3GEYJ 101 V (100) | T | 13.6/48.2 |
| R970 | 7030003320 | S.RES ERJ3GEYJ 101 V (100) | T | 13.6/46.9 |
| R971 | 7030003320 | S.RES ERJ3GEYJ 101 V (100) | T | 13.6/45.6 |
| R972 | 7030003320 | S.RES ERJ3GEYJ 101 V (100) | T | 13.6/44.3 |
| R973 | 7030003320 | S.RES ERJ3GEYJ 101 V (100) | T | 13.6/43 |
| R974 | 7030003320 | S.RES ERJ3GEYJ 101 V (100) | T | 13.6/41.7 |
| R975 | 7030003320 | S.RES ERJ3GEYJ 101 V (100) | T | 13.6/40.4 |
| R976 | 7030003320 | S.RES ERJ3GEYJ 101 V (100) | T | 13.6/39.1 |
| | | | | |
| C1 | 4030011600 | S.CER C1608 JB 1E 104K-T | B | 15.2/30.5 |
| C2 | 4030011600 | S.CER C1608 JB 1E 104K-T | B | 41.8/30.7 |
| C3 | 4030011600 | S.CER C1608 JB 1E 104K-T | B | 18/32.9 |
| C4 | 4030011600 | S.CER C1608 JB 1E 104K-T | B | 39.4/32.9 |
| C5 | 4030011600 | S.CER C1608 JB 1E 104K-T | B | 23/26.3 |
| C6 | 4030011600 | S.CER C1608 JB 1E 104K-T | B | 24.3/26.3 |
| C7 | 4030011600 | S.CER C1608 JB 1E 104K-T | B | 28.6/26.3 |
| C8 | 4030011600 | S.CER C1608 JB 1E 104K-T | B | 29.9/26.3 |
| C9 | 4030011600 | S.CER C1608 JB 1E 104K-T | B | 33.8/26.3 |
| C10 | 4030011600 | S.CER C1608 JB 1E 104K-T | B | 21.5/23.3 |
| C11 | 4030011600 | S.CER C1608 JB 1E 104K-T | B | 36/23.7 |
| C12 | 4030011600 | S.CER C1608 JB 1E 104K-T | T | 13.7/21 |
| C13 | 4030011600 | S.CER C1608 JB 1E 104K-T | B | 22.2/20.2 |
| C14 | 4030011600 | S.CER C1608 JB 1E 104K-T | B | 36/21.1 |
| C15 | 4030011600 | S.CER C1608 JB 1E 104K-T | B | 22.2/18.9 |
| C16 | 4030011600 | S.CER C1608 JB 1E 104K-T | B | 36/18.5 |
| C17 | 4030011600 | S.CER C1608 JB 1E 104K-T | T | 43.5/20 |
| C18 | 4030011600 | S.CER C1608 JB 1E 104K-T | B | 22.2/15.2 |
| C19 | 4030011600 | S.CER C1608 JB 1E 104K-T | B | 34.7/14.4 |
| C20 | 4030011600 | S.CER C1608 JB 1E 104K-T | B | 23.1/13.3 |
| C21 | 4030011600 | S.CER C1608 JB 1E 104K-T | B | 24.4/13.3 |
| C22 | 4030011600 | S.CER C1608 JB 1E 104K-T | B | 28.1/13.3 |
| C23 | 4030011600 | S.CER C1608 JB 1E 104K-T | B | 32.6/12.6 |
| C24 | 4030011600 | S.CER C1608 JB 1E 104K-T | B | 35.2/12.6 |
| C25 | 4030011600 | S.CER C1608 JB 1E 104K-T | B | 17.3/6.7 |
| C26 | 4030011600 | S.CER C1608 JB 1E 104K-T | B | 33.1/6.8 |
| C27 | 4030011600 | S.CER C1608 JB 1E 104K-T | B | 41.8/11.1 |
| C28 | 4030011600 | S.CER C1608 JB 1E 104K-T | B | 15.4/8.2 |
| C29 | 4030011600 | S.CER C1608 JB 1E 104K-T | B | 40.9/6.8 |
| C30 | 4030011600 | S.CER C1608 JB 1E 104K-T | T | 35.2/5 |
| C31 | 4030011600 | S.CER C1608 JB 1E 104K-T | T | 28.5/5.2 |
| C32 | 4030011600 | S.CER C1608 JB 1E 104K-T | T | 37.8/5 |
| C33 | 4030011600 | S.CER C1608 JB 1E 104K-T | T | 18.5/35.2 |
| C34 | 4030011600 | S.CER C1608 JB 1E 104K-T | T | 36.4/35 |
| C35 | 4030011600 | S.CER C1608 JB 1E 104K-T | B | 26/32.9 |
| C36 | 4030011600 | S.CER C1608 JB 1E 104K-T | B | 29.3/32.9 |
| C37 | 4030011600 | S.CER C1608 JB 1E 104K-T | B | 36.8/32.9 |

## [DSP-B BOARD]

| REF NO. | ORDER NO. | DESCRIPTION | M. | H/V LOCATION |
|---|---|---|---|---|
| C38 | 4030011600 | S.CER C1608 JB 1E 104K-T | B | 15.2/27.9 |
| C39 | 4030011600 | S.CER C1608 JB 1E 104K-T | B | 22.4/32.9 |
| C40 | 4030011600 | S.CER C1608 JB 1E 104K-T | B | 26/26.3 |
| C41 | 4030011600 | S.CER C1608 JB 1E 104K-T | B | 21.7/26.3 |
| C42 | 4030011600 | S.CER C1608 JB 1E 104K-T | B | 27.3/26.3 |
| C43 | 4030011600 | S.CER C1608 JB 1E 104K-T | B | 32.5/26.3 |
| C44 | 4030011600 | S.CER C1608 JB 1E 104K-T | B | 35.1/26.3 |
| C45 | 4030011600 | S.CER C1608 JB 1E 104K-T | B | 41.8/26.8 |
| C46 | 4030011600 | S.CER C1608 JB 1E 104K-T | B | 15.3/24.9 |
| C47 | 4030011600 | S.CER C1608 JB 1E 104K-T | T | 43.5/29 |
| C48 | 4030011600 | S.CER C1608 JB 1E 104K-T | B | 22.2/21.5 |
| C49 | 4030011600 | S.CER C1608 JB 1E 104K-T | B | 41.8/17.9 |
| C50 | 4030011600 | S.CER C1608 JB 1E 104K-T | B | 22.2/17.6 |
| C51 | 4030011600 | S.CER C1608 JB 1E 104K-T | B | 36/15.9 |
| C52 | 4030011600 | S.CER C1608 JB 1E 104K-T | B | 15.8/11.6 |
| C53 | 4030011600 | S.CER C1608 JB 1E 104K-T | B | 21.8/13.3 |
| C54 | 4030011600 | S.CER C1608 JB 1E 104K-T | T | 42.9/9.9 |
| C55 | 4030011600 | S.CER C1608 JB 1E 104K-T | B | 29.4/13.3 |
| C56 | 4030011600 | S.CER C1608 JB 1E 104K-T | B | 25/6.7 |
| C57 | 4030011600 | S.CER C1608 JB 1E 104K-T | B | 29.8/6.8 |
| C58 | 4030011600 | S.CER C1608 JB 1E 104K-T | B | 38.3/6.8 |
| C59 | 4030011600 | S.CER C1608 JB 1E 104K-T | T | 20.3/5.3 |
| C60 | 4510007130 | S.ELE EEFCD 0J 470R | T | 19.6/44 |
| C61 | 4550007480 | S.TAN F930J106MAABMA | B | 44.8/29.7 |
| C62 | 4510007130 | S.ELE EEFCD 0J 470R | T | 25.7/43.9 |
| C101 | 4030011600 | S.CER C1608 JB 1E 104K-T | B | 35.7/6.8 |
| C102 | 4550007480 | S.TAN F930J106MAABMA | B | 30.6/2.6 |
| C151 | 4030011600 | S.CER C1608 JB 1E 104K-T | B | 45.6/10 |
| C152 | 4030007030 | S.CER C1608 CH 1H 150J-T | B | 46.1/6.2 |
| C153 | 4030007030 | S.CER C1608 CH 1H 150J-T | B | 43.1/8 |
| C171 | 4030011600 | S.CER C1608 JB 1E 104K-T | T | 41.3/2.7 |
| C181 | 4030011600 | S.CER C1608 JB 1E 104K-T | T | 31/4.3 |
| C191 | 4030011600 | S.CER C1608 JB 1E 104K-T | T | 22.6/1.2 |
| C201 | 4030011600 | S.CER C1608 JB 1E 104K-T | B | 41.4/43.3 |
| C301 | 4340000250 | S.MLR ECHU 1C 104JX5 | T | 77.9/44 |
| C302 | 4550007500 | S.TAN F931D106MBABMA | B | 76.5/43.7 |
| C303 | 4030011600 | S.CER C1608 JB 1E 104K-T | T | 75.6/40.9 |
| C304 | 4550007500 | S.TAN F931D106MBABMA | B | 71.7/43.7 |
| C305 | 4030011600 | S.CER C1608 JB 1E 104K-T | T | 67.6/46.1 |
| C306 | 4030007050 | S.CER C1608 CH 1H 220J-T | T | 72.4/40.1 |
| C331 | 4030011600 | S.CER C1608 JB 1E 104K-T | T | 78.8/32.8 |
| C332 | 4550007520 | S.TAN F931A106MAABMA | B | 67.9/35.2 |
| C333 | 4030011600 | S.CER C1608 JB 1E 104K-T | T | 79.5/35.8 |
| C341 | 4550007500 | S.TAN F931D106MBABMA | B | 73.1/32.4 |
| C342 | 4030011600 | S.CER C1608 JB 1E 104K-T | T | 73.7/31.6 |
| C343 | 4550007500 | S.TAN F931D106MBABMA | B | 73.2/38.1 |
| C344 | 4030011600 | S.CER C1608 JB 1E 104K-T | T | 65.6/37.3 |
| C345 | 4340000250 | S.MLR ECHU 1C 104JX5 | T | 76.7/38.1 |
| C346 | 4030018580 | S.CER C1608 CH 1H 821J-T | T | 66.9/33.6 |
| C347 | 4030011600 | S.CER C1608 JB 1E 104K-T | T | 66.1/35.5 |
| C348 | 4030007050 | S.CER C1608 CH 1H 220J-T | T | 70.9/30.9 |
| C371 | 4550007500 | S.TAN F931D106MBABMA | B | 59.8/43.8 |
| C372 | 4030011600 | S.CER C1608 JB 1E 104K-T | T | 63.4/42.5 |
| C373 | 4550007500 | S.TAN F931D106MBABMA | B | 50.1/43.9 |
| C374 | 4030011600 | S.CER C1608 JB 1E 104K-T | T | 53.4/45.5 |
| C375 | 4340000250 | S.MLR ECHU 1C 104JX5 | T | 68.1/42.6 |
| C376 | 4030018580 | S.CER C1608 CH 1H 821J-T | T | 56/43.1 |
| C377 | 4030011600 | S.CER C1608 JB 1E 104K-T | T | 55.3/45 |
| C378 | 4030007050 | S.CER C1608 CH 1H 220J-T | T | 59.4/39.5 |
| C401 | 4550007520 | S.TAN F931A106MAABMA | B | 54.9/43.8 |
| C402 | 4030017840 | S.CER C2012 CH 1H 222J-T | T | 58.1/37.6 |
| C403 | 4550007480 | S.TAN F930J106MAABMA | B | 63.1/35.2 |
| C404 | 4030011810 | S.CER C1608 JB 1A 224K-T | T | 61.5/37.4 |
| C405 | 4550007480 | S.TAN F930J106MAABMA | B | 58.3/35.2 |
| C406 | 4030011810 | S.CER C1608 JB 1A 224K-T | T | 63.5/36.7 |
| C407 | 4550007480 | S.TAN F930J106MAABMA | B | 50.4/36.1 |
| C408 | 4030011600 | S.CER C1608 JB 1E 104K-T | T | 54.1/37.4 |
| C409 | 4030011600 | S.CER C1608 JB 1E 104K-T | T | 54.1/23.2 |
| C410 | 4030009000 | S.CER C2012 JB 1C 224K-T | T | 62.1/24.2 |
| C411 | 4550007480 | S.TAN F930J106MAABMA | B | 63.1/28.4 |
| C412 | 4550007480 | S.TAN F930J106MAABMA | B | 58.3/29.1 |
| C413 | 4030009000 | S.CER C2012 JB 1C 224K-T | T | 59/22.5 |
| C414 | 4030011600 | S.CER C1608 JB 1E 104K-T | T | 54.1/24.5 |
| C415 | 4550007520 | S.TAN F931A106MAABMA | B | 53/26.5 |
| C416 | 4550007520 | S.TAN F931A106MAABMA | B | 53/31.3 |
| C417 | 4030017840 | S.CER C2012 CH 1H 222J-T | T | 58/24.2 |
| C450 | 4030011600 | S.CER C1608 JB 1E 104K-T | T | 43.1/35.3 |
| C451 | 4030011600 | S.CER C1608 JB 1E 104K-T | T | 43.6/42.9 |
| C452 | 4030006860 | S.CER C1608 JB 1H 102K-T | T | 40.8/39.6 |
| C501 | 4030011600 | S.CER C1608 JB 1E 104K-T | T | 74.8/24 |
| C502 | 4550007500 | S.TAN F931D106MBABMA | B | 77.5/33.1 |
| C503 | 4030011600 | S.CER C1608 JB 1E 104K-T | T | 71.6/23.4 |
| C504 | 4550007500 | S.TAN F931D106MBABMA | B | 67.9/29.1 |
| C506 | 4030007090 | S.CER C1608 CH 1H 470J-T | T | 67.1/28.4 |
| C507 | 4030007090 | S.CER C1608 CH 1H 470J-T | T | 76.1/27.3 |
| C551 | 4550007520 | S.TAN F931A106MAABMA | B | 50.3/8.7 |
| C552 | 4030011600 | S.CER C1608 JB 1E 104K-T | T | 49.5/5.5 |
| C553 | 4550007520 | S.TAN F931A106MAABMA | B | 55/13.3 |
| C554 | 4030011600 | S.CER C1608 JB 1E 104K-T | T | 60/7.6 |
| C555 | 4030011600 | S.CER C1608 JB 1E 104K-T | T | 59.8/4.6 |
| C556 | 4550007480 | S.TAN F930J106MAABMA | B | 53.6/7.1 |
| C557 | 4030011600 | S.CER C1608 JB 1E 104K-T | T | 60.7/2.8 |

M.=Mounted side (T: Mounted on the Top side, B: Mounted on the Bottom side)
S.=Surface mount

## [DSP-B BOARD]

| REF NO. | ORDER NO. | DESCRIPTION | M. | H/V LOCATION |
|---|---|---|---|---|
| C558 | 4550007520 | S.TAN F931A106MAABMA | B | 53.6/4.3 |
| C601 | 4550007480 | S.TAN F930J106MAABMA | B | 61.3/17.2 |
| C602 | 4030018510 | S.CER C2012 CH 1H 682J-T | T | 58.8/16.5 |
| C603 | 4550007500 | S.TAN F931D106MBABMA | B | 68.2/15 |
| C604 | 4030011600 | S.CER C1608 JB 1E 104K-T | T | 58.2/14.2 |
| C605 | 4030011600 | S.CER C1608 JB 1E 104K-T | T | 64.5/13.9 |
| C606 | 4550007500 | S.TAN F931D106MBABMA | B | 69.2/19.2 |
| C607 | 4030018510 | S.CER C2012 CH 1H 682J-T | T | 67/22.5 |
| C608 | 4030007050 | S.CER C1608 CH 1H 220J-T | T | 68.3/16.7 |
| C651 | 4550007480 | S.TAN F930J106MAABMA | B | 60.1/9.2 |
| C652 | 4030018510 | S.CER C2012 CH 1H 682J-T | T | 61.9/6.6 |
| C653 | 4550007500 | S.TAN F931D106MBABMA | B | 59.9/2.6 |
| C654 | 4030011600 | S.CER C1608 JB 1E 104K-T | T | 64/2.5 |
| C655 | 4030011600 | S.CER C1608 JB 1E 104K-T | T | 67.7/2.5 |
| C656 | 4550007500 | S.TAN F931D106MBABMA | B | 59.9/6 |
| C657 | 4030018510 | S.CER C2012 CH 1H 682J-T | T | 68.3/12.2 |
| C658 | 4030007050 | S.CER C1608 CH 1H 220J-T | T | 71.4/6.9 |
| C701 | 4030017840 | S.CER C2012 CH 1H 222J-T | T | 74.3/21.1 |
| C702 | 4030017840 | S.CER C2012 CH 1H 222J-T | T | 78.9/13.4 |
| C703 | 4550007500 | S.TAN F931D106MBABMA | B | 75.3/15.7 |
| C704 | 4030011600 | S.CER C1608 JB 1E 104K-T | T | 75.9/12.8 |
| C705 | 4030011600 | S.CER C1608 JB 1E 104K-T | T | 79.4/20.6 |
| C706 | 4550007500 | S.TAN F931D106MBABMA | B | 75.6/21.1 |
| C707 | 4030007050 | S.CER C1608 CH 1H 220J-T | T | 78.7/18 |
| C771 | 4550007480 | S.TAN F930J106MAABMA | B | 49.8/14.1 |
| C772 | 4030011600 | S.CER C1608 JB 1E 104K-T | T | 49.5/15 |
| C773 | 4550007480 | S.TAN F930J106MAABMA | B | 55/18.1 |
| C801 | 4030011600 | S.CER C1608 JB 1E 104K-T | T | 77.4/24 |
| C921 | 4550007510 | S.TAN F931C106MBABMA | B | 66.5/2.6 |
| C922 | 4030011600 | S.CER C1608 JB 1E 104K-T | T | 71/3.6 |
| C923 | 4550002830 | S.TAN TEESVD2 1V 685M12R | B | 78.3/6.5 |
| C924 | 4030011600 | S.CER C1608 JB 1E 104K-T | T | 80.1/8.6 |
| C925 | 4550007510 | S.TAN F931C106MBABMA | B | 67.1/10.5 |
| C926 | 4030011600 | S.CER C1608 JB 1E 104K-T | T | 71.8/12.7 |
| C927 | 4550002830 | S.TAN TEESVD2 1V 685M12R | B | 72.6/6.5 |
| C928 | 4030011600 | S.CER C1608 JB 1E 104K-T | T | 79.6/5.2 |
| C961 | 4030011600 | S.CER C1608 JB 1E 104K-T | B | 11.2/15.7 |
| C962 | 4550007520 | S.TAN F931A106MAABMA | B | 12/18.8 |
| C963 | 4030011600 | S.CER C1608 JB 1E 104K-T | B | 10.7/25.4 |
| C964 | 4550007520 | S.TAN F931A106MAABMA | B | 11.4/29.4 |
| | | | | |
| J201 | 6510024450 | S.CNR IC197-3202-2000 | B | 29/42 |
| J921 | 6910013900 | CNR IMSA-9180S-22A | | |
| J961 | 6910012460 | CNR IMSA-9180S-30A | | |

## [DSP-TX BOARD]

| REF NO. | ORDER NO. | DESCRIPTION | M. | H/V LOCATION |
|---|---|---|---|---|
| IC1 | 1140012211 | S.IC TMS320C6713BZDP225 | T | 28.1/20.4 |
| IC151 | 1130008361 | S.IC TC7SHU04FU (TE85L,JF) | B | 45.5/8.1 |
| IC171 | 1130008041 | S.IC TC7SH04FU(TE85L,JF) | T | 41.3/4.6 |
| IC181 | 1130011150 | S.IC SN74AHC2G08HDCTR | T | 30.2/1.9 |
| IC191 | 1130011150 | S.IC SN74AHC2G08HDCTR | T | 24/3.5 |
| IC201 | 1130012204 | S.IC AT29LV040A-15TU | B | 29.5/42 |
| IC203 | 1110006411 | S.IC R3111N111A-TR-F | T | 30.2/36.6 |
| IC301 | 1110006100 | S.IC NJM5534MD-TE1 | T | 72.3/44.4 |
| IC341 | 1110006100 | S.IC NJM5534MD-TE1 | T | 72.1/35.2 |
| IC371 | 1110006100 | S.IC NJM5534MD-TE1 | T | 59.4/44.4 |
| IC401 | 1110006111 | S.IC AK5394AVSP/P | T | 54.2/31 |
| IC451 | 1130006891 | S.IC TC7S04FU (TE85R,F) | T | 42.8/35.8 |
| IC452 | 1130012160 | S.IC SN74LVC1GU04DCKR | T | 42.3/39.8 |
| IC551 | 1190002090 | S.IC AD1854JRSZRL | T | 53.3/5.8 |
| IC601 | 1110006100 | S.IC NJM5534MD-TE1 | T | 53.1/15.2 |
| IC651 | 1110006100 | S.IC NJM5534MD-TE1 | T | 65.3/5 |
| IC701 | 1110006100 | S.IC NJM5534MD-TE1 | T | 63.2/14.8 |
| IC801 | 1110006100 | S.IC NJM5534MD-TE1 | T | 68.4/25.8 |
| IC831 | 1110006100 | S.IC NJM5534MD-TE1 | T | 73.1/15.8 |
| IC871 | 1110006100 | S.IC NJM5534MD-TE1 | T | 77/26.1 |
| | | | | |
| FI101 | 2040000790 | S.LC EXCCET103U | T | 36.5/2.2 |
| | | | | |
| X151 | 6050011660 | S.XTL CR-754 (30.000 MHz) | B | 40.5/2.9 |
| | | | | |
| L1 | 6200003950 | S.COL HF50ACC 322513-T | B | 45/39.6 |
| L2 | 6180003501 | S.COL SLF6028T-100M1R3-PF | B | 13.6/35.4 |
| L3 | 6200003640 | S.COL MLF1608E 100K-T | B | 10.9/7.7 |
| L401 | 6200003950 | S.COL HF50ACC 322513-T | T | 49.4/43.1 |
| L921 | 6200003950 | S.COL HF50ACC 322513-T | T | 75/3.7 |
| L922 | 6200003950 | S.COL HF50ACC 322513-T | T | 79.7/8.8 |
| L924 | 6200003950 | S.COL HF50ACC 322513-T | T | 75/8.8 |
| L925 | 6200003950 | S.COL HF50ACC 322513-T | T | 79.7/3.7 |
| L961 | 6200003950 | S.COL HF50ACC 322513-T | B | 11.5/11.9 |
| L962 | 6200003950 | S.COL HF50ACC 322513-T | B | 12.6/24 |
| | | | | |
| R1 | 7030003560 | S.RES ERJ3GEYJ 103 V (10 k) | B | 43/22.2 |
| R2 | 7030003560 | S.RES ERJ3GEYJ 103 V (10 k) | B | 42.2/24.2 |
| R3 | 7030003560 | S.RES ERJ3GEYJ 103 V (10 k) | B | 43/20.9 |
| R4 | 7030003560 | S.RES ERJ3GEYJ 103 V (10 k) | B | 42.4/13.7 |
| R5 | 7030003440 | S.RES ERJ3GEYJ 102 V (1 k) | B | 23.2/5.5 |
| R6 | 7030003440 | S.RES ERJ3GEYJ 102 V (1 k) | B | 21.9/5.5 |
| R7 | 7030003640 | S.RES ERJ3GEYJ 473 V (47 k) | B | 20.6/5.5 |
| R8 | 7030003440 | S.RES ERJ3GEYJ 102 V (1 k) | B | 13.7/8.1 |
| R9 | 7030003640 | S.RES ERJ3GEYJ 473 V (47 k) | B | 13.7/11.5 |
| R10 | 7030003640 | S.RES ERJ3GEYJ 473 V (47 k) | T | 43.8/13.1 |
| R11 | 7030003460 | S.RES ERJ3GEYJ 152 V (1.5 k) | B | 41.8/8.5 |
| R12 | 7030003560 | S.RES ERJ3GEYJ 103 V (10 k) | B | 26.8/13.8 |
| R151 | 7030003320 | S.RES ERJ3GEYJ 101 V (100) | T | 44.6/5.3 |
| R152 | 7030003800 | S.RES ERJ3GEYJ 105 V (1 M) | B | 43.5/6.2 |
| R171 | 7030003320 | S.RES ERJ3GEYJ 101 V (100) | T | 41.3/1.4 |
| R181 | 7030003560 | S.RES ERJ3GEYJ 103 V (10 k) | T | 6.4/7 |
| R182 | 7030003560 | S.RES ERJ3GEYJ 103 V (10 k) | T | 9.2/7 |
| R183 | 7030003560 | S.RES ERJ3GEYJ 103 V (10 k) | T | 11.8/8.3 |
| R184 | 7030003560 | S.RES ERJ3GEYJ 103 V (10 k) | T | 11.8/7 |
| R201 | 7030003860 | S.RES ERJ3GE JPW V | T | 30.8/39.3 |
| R301 | 7030003440 | S.RES ERJ3GEYJ 102 V (1 k) | T | 79.5/37.7 |
| R302 | 7030009591 | S.RES ERA3YED 472V (4.7 k) | T | 77.6/46.9 |
| R303 | 7030009591 | S.RES ERA3YED 472V (4.7 k) | T | 75.7/46.1 |
| R304 | 7030003320 | S.RES ERJ3GEYJ 101 V (100) | T | 78.1/40.1 |
| R305 | 7030003440 | S.RES ERJ3GEYJ 102 V (1 k) | T | 75.7/43.5 |
| R306 | 7030003320 | S.RES ERJ3GEYJ 101 V (100) | T | 68.9/46.1 |
| R341 | 7030003320 | S.RES ERJ3GEYJ 101 V (100) | T | 76.2/34.6 |
| R342 | 7030003320 | S.RES ERJ3GEYJ 101 V (100) | T | 68.5/38.4 |
| R343 | 7030005321 | S.RES ERA3YED 103V (10 k) | T | 64.5/34.6 |
| R344 | 7030009591 | S.RES ERA3YED 472V (4.7 k) | T | 67/33.9 |
| R345 | 7030009691 | S.RES ERA3YED 101V (100) | T | 67.7/31.9 |
| R371 | 7030003320 | S.RES ERJ3GEYJ 101 V (100) | B | 62.9/42.1 |
| R372 | 7030003320 | S.RES ERJ3GEYJ 101 V (100) | T | 55.3/46.3 |
| R373 | 7030005321 | S.RES ERA3YED 103V (10 k) | T | 63.7/46.2 |
| R374 | 7030009591 | S.RES ERA3YED 472V (4.7 k) | T | 54.7/41.8 |
| R375 | 7030009691 | S.RES ERA3YED 101V (100) | T | 56/40.5 |
| R401 | 7030009591 | S.RES ERA3YED 472V (4.7 k) | T | 53.1/42.5 |
| R402 | 7030009591 | S.RES ERA3YED 472V (4.7 k) | T | 51.6/44 |
| R403 | 7030003640 | S.RES ERJ3GEYJ 473 V (47 k) | T | 54.1/38.7 |
| R404 | 7030003200 | S.RES ERJ3GEYJ 100 V (10) | T | 50/40 |
| R405 | 7030003320 | S.RES ERJ3GEYJ 101 V (100) | T | 51.1/38.1 |
| R406 | 7030003640 | S.RES ERJ3GEYJ 473 V (47 k) | T | 49.8/38.1 |
| R407 | 7030003460 | S.RES ERJ3GEYJ 152 V (1.5 k) | B | 48/35.4 |
| R409 | 7030003640 | S.RES ERJ3GEYJ 473 V (47 k) | T | 51.9/23.8 |
| R410 | 7030003640 | S.RES ERJ3GEYJ 473 V (47 k) | T | 50.6/23.8 |
| R411 | 7030003640 | S.RES ERJ3GEYJ 473 V (47 k) | T | 49/23.8 |
| R412 | 7030003520 | S.RES ERJ3GEYJ 472 V (4.7 k) | T | 57.2/22.2 |
| R413 | 7030003520 | S.RES ERJ3GEYJ 472 V (4.7 k) | T | 57.2/20.9 |
| R414 | 7030003360 | S.RES ERJ3GEYJ 221 V (220) | T | 46/38.2 |
| R451 | 7030003800 | S.RES ERJ3GEYJ 105 V (1 M) | T | 40.4/41.1 |
| R452 | 7030003440 | S.RES ERJ3GEYJ 102 V (1 k) | B | 45.8/35.5 |
| R551 | 7030003360 | S.RES ERJ3GEYJ 221 V (220) | B | 54/9.3 |

M.=Mounted side (T: Mounted on the Top side, B: Mounted on the Bottom side)
S.=Surface mount

## [DSP-TX BOARD]

| REF NO. | ORDER NO. | DESCRIPTION | M. | H/V LOCATION |
|---|---|---|---|---|
| R601 | 7030006521 | S.RES ERA3YED 561V (560) | T | 50.2/18.6 |
| R602 | 7030007661 | S.RES ERA3YED 331V (330) | T | 50.2/19.9 |
| R603 | 7030007661 | S.RES ERA3YED 331V (330) | T | 48.3/17.1 |
| R604 | 7030009961 | S.RES ERA3YED 221V (220) | T | 55.4/18.6 |
| R605 | 7030007661 | S.RES ERA3YED 331V (330) | T | 52.8/18.6 |
| R606 | 7030003320 | S.RES ERJ3GEYJ 101 V (100) | B | 51.4/24.7 |
| R607 | 7030003320 | S.RES ERJ3GEYJ 101 V (100) | B | 52.2/13.1 |
| R651 | 7030006521 | S.RES ERA3YED 561V (560) | T | 62.5/8.4 |
| R652 | 7030007661 | S.RES ERA3YED 331V (330) | T | 63.5/9.7 |
| R653 | 7030007661 | S.RES ERA3YED 331V (330) | T | 60.3/8.2 |
| R654 | 7030009961 | S.RES ERA3YED 221V (220) | T | 67.7/8.4 |
| R655 | 7030007661 | S.RES ERA3YED 331V (330) | T | 65.1/8.4 |
| R656 | 7030003320 | S.RES ERJ3GEYJ 101 V (100) | B | 67.2/8.2 |
| R657 | 7030003320 | S.RES ERJ3GEYJ 101 V (100) | B | 65.1/2.8 |
| R701 | 7030010770 | S.RES ERA3YED 681V (680) | T | 58/18.2 |
| R702 | 7030009861 | S.RES ERA3YED 471V (470) | T | 62.1/20 |
| R703 | 7030010770 | S.RES ERA3YED 681V (680) | T | 70.7/9.3 |
| R704 | 7030009861 | S.RES ERA3YED 471V (470) | T | 55.6/11.8 |
| R705 | 7030009691 | S.RES ERA3YED 101V (100) | T | 69/12 |
| R706 | 7030003320 | S.RES ERJ3GEYJ 101 V (100) | B | 61/23.1 |
| R707 | 7030003320 | S.RES ERJ3GEYJ 101 V (100) | B | 54.7/14.5 |
| R801 | 7030009591 | S.RES ERA3YED 472V (4.7 k) | T | 65/22.8 |
| R802 | 7030003320 | S.RES ERJ3GEYJ 101 V (100) | T | 63.5/22.8 |
| R803 | 7030005321 | S.RES ERA3YED 103V (10 k) | T | 68.6/21.1 |
| R804 | 7030003320 | S.RES ERJ3GEYJ 101 V (100) | B | 69.7/31.7 |
| R805 | 7030003320 | S.RES ERJ3GEYJ 101 V (100) | B | 72.4/21.7 |
| R831 | 7030009591 | S.RES ERA3YED 472V (4.7 k) | T | 68.4/17.9 |
| R832 | 7030003320 | S.RES ERJ3GEYJ 101 V (100) | T | 68.6/19.7 |
| R833 | 7030005321 | S.RES ERA3YED 103V (10 k) | T | 69.7/15.3 |
| R834 | 7030003320 | S.RES ERJ3GEYJ 101 V (100) | B | 64/23.2 |
| R835 | 7030003320 | S.RES ERJ3GEYJ 101 V (100) | B | 73.4/13.3 |
| R871 | 7030003520 | S.RES ERJ3GEYJ 472 V (4.7 k) | T | 77.8/13.7 |
| R872 | 7030003520 | S.RES ERJ3GEYJ 472 V (4.7 k) | T | 79.1/18.7 |
| R874 | 7030003320 | S.RES ERJ3GEYJ 101 V (100) | B | 71.3/31.7 |
| R875 | 7030003320 | S.RES ERJ3GEYJ 101 V (100) | B | 74.4/21.3 |
| R901 | 7030003860 | S.RES ERJ3GE JPW V | T | 52.7/22 |
| R903 | 7030003860 | S.RES ERJ3GE JPW V | B | 47.7/38 |
| R904 | 7030003860 | S.RES ERJ3GE JPW V | T | 47.1/4.2 |
| R905 | 7030003860 | S.RES ERJ3GE JPW V | B | 48.1/10.2 |
| R962 | 7030003320 | S.RES ERJ3GEYJ 101 V (100) | T | 12.1/17.5 |
| R963 | 7030003320 | S.RES ERJ3GEYJ 101 V (100) | T | 11.9/16.2 |
| R964 | 7030003320 | S.RES ERJ3GEYJ 101 V (100) | T | 11.9/14.9 |
| R967 | 7030003320 | S.RES ERJ3GEYJ 101 V (100) | T | 13.6/38.7 |
| R968 | 7030003320 | S.RES ERJ3GEYJ 101 V (100) | T | 11.9/12.3 |
| R969 | 7030003320 | S.RES ERJ3GEYJ 101 V (100) | T | 13.6/47.8 |
| R970 | 7030003320 | S.RES ERJ3GEYJ 101 V (100) | T | 13.6/46.5 |
| R971 | 7030003320 | S.RES ERJ3GEYJ 101 V (100) | T | 13.6/45.2 |
| R972 | 7030003320 | S.RES ERJ3GEYJ 101 V (100) | T | 13.6/43.9 |
| R973 | 7030003320 | S.RES ERJ3GEYJ 101 V (100) | T | 13.6/42.6 |
| R974 | 7030003320 | S.RES ERJ3GEYJ 101 V (100) | T | 13.6/41.3 |
| R975 | 7030003320 | S.RES ERJ3GEYJ 101 V (100) | T | 13.6/40 |
| R976 | 7030003320 | S.RES ERJ3GEYJ 101 V (100) | T | 11.9/13.6 |
| | | | | |
| C1 | 4030011600 | S.CER C1608 JB 1E 104K-T | B | 15.2/30.4 |
| C2 | 4030011600 | S.CER C1608 JB 1E 104K-T | B | 42.2/30.7 |
| C3 | 4030011600 | S.CER C1608 JB 1E 104K-T | B | 18/32.9 |
| C4 | 4030011600 | S.CER C1608 JB 1E 104K-T | B | 39.4/32.9 |
| C5 | 4030011600 | S.CER C1608 JB 1E 104K-T | B | 23.3/25.8 |
| C6 | 4030011600 | S.CER C1608 JB 1E 104K-T | B | 24.6/25.8 |
| C7 | 4030011600 | S.CER C1608 JB 1E 104K-T | B | 28.7/25.8 |
| C8 | 4030011600 | S.CER C1608 JB 1E 104K-T | B | 30/25.8 |
| C9 | 4030011600 | S.CER C1608 JB 1E 104K-T | B | 33.8/25.8 |
| C10 | 4030011600 | S.CER C1608 JB 1E 104K-T | B | 22.7/23.8 |
| C11 | 4030011600 | S.CER C1608 JB 1E 104K-T | B | 35.5/23.2 |
| C12 | 4030011600 | S.CER C1608 JB 1E 104K-T | T | 12.6/20.7 |
| C13 | 4030011600 | S.CER C1608 JB 1E 104K-T | B | 22.7/20.2 |
| C14 | 4030011600 | S.CER C1608 JB 1E 104K-T | B | 35.5/20.6 |
| C15 | 4030011600 | S.CER C1608 JB 1E 104K-T | B | 22.7/18.9 |
| C16 | 4030011600 | S.CER C1608 JB 1E 104K-T | B | 34.2/18.4 |
| C17 | 4030011600 | S.CER C1608 JB 1E 104K-T | T | 43.5/20 |
| C18 | 4030011600 | S.CER C1608 JB 1E 104K-T | B | 22.7/15.7 |
| C19 | 4030011600 | S.CER C1608 JB 1E 104K-T | B | 34.2/14.9 |
| C20 | 4030011600 | S.CER C1608 JB 1E 104K-T | B | 23.3/13.8 |
| C21 | 4030011600 | S.CER C1608 JB 1E 104K-T | B | 24.6/13.8 |
| C22 | 4030011600 | S.CER C1608 JB 1E 104K-T | B | 28.1/13.8 |
| C23 | 4030011600 | S.CER C1608 JB 1E 104K-T | B | 32.6/13.1 |
| C24 | 4030011600 | S.CER C1608 JB 1E 104K-T | B | 35.2/13.1 |
| C25 | 4030011600 | S.CER C1608 JB 1E 104K-T | B | 17.3/6.7 |
| C26 | 4030011600 | S.CER C1608 JB 1E 104K-T | B | 33.1/6.3 |
| C27 | 4030011600 | S.CER C1608 JB 1E 104K-T | B | 42.4/11.1 |
| C28 | 4030011600 | S.CER C1608 JB 1E 104K-T | B | 15/8.1 |
| C29 | 4030011600 | S.CER C1608 JB 1E 104K-T | B | 40.9/6.6 |
| C30 | 4030011600 | S.CER C1608 JB 1E 104K-T | T | 35.2/5 |
| C31 | 4030011600 | S.CER C1608 JB 1E 104K-T | T | 28.5/5.2 |
| C32 | 4030011600 | S.CER C1608 JB 1E 104K-T | T | 37.8/5 |
| C33 | 4030011600 | S.CER C1608 JB 1E 104K-T | T | 18.6/35.5 |
| C34 | 4030011600 | S.CER C1608 JB 1E 104K-T | T | 37.5/35.5 |
| C35 | 4030011600 | S.CER C1608 JB 1E 104K-T | B | 26/32.9 |
| C36 | 4030011600 | S.CER C1608 JB 1E 104K-T | B | 29.3/32.9 |
| C37 | 4030011600 | S.CER C1608 JB 1E 104K-T | B | 36.8/32.9 |
| C38 | 4030011600 | S.CER C1608 JB 1E 104K-T | B | 15.2/27.7 |

## [DSP-TX BOARD]

| REF NO. | ORDER NO. | DESCRIPTION | M. | H/V LOCATION |
|---|---|---|---|---|
| C39 | 4030011600 | S.CER C1608 JB 1E 104K-T | B | 22.4/32.9 |
| C40 | 4030011600 | S.CER C1608 JB 1E 104K-T | B | 26.1/25.8 |
| C41 | 4030011600 | S.CER C1608 JB 1E 104K-T | B | 22/25.8 |
| C42 | 4030011600 | S.CER C1608 JB 1E 104K-T | B | 27.4/25.8 |
| C43 | 4030011600 | S.CER C1608 JB 1E 104K-T | B | 32.5/25.8 |
| C44 | 4030011600 | S.CER C1608 JB 1E 104K-T | B | 35.1/25.8 |
| C45 | 4030011600 | S.CER C1608 JB 1E 104K-T | B | 42.2/26.8 |
| C46 | 4030011600 | S.CER C1608 JB 1E 104K-T | B | 15.3/24.9 |
| C47 | 4030011600 | S.CER C1608 JB 1E 104K-T | T | 43.5/29 |
| C48 | 4030011600 | S.CER C1608 JB 1E 104K-T | B | 22.7/21.5 |
| C49 | 4030011600 | S.CER C1608 JB 1E 104K-T | B | 42.4/17.9 |
| C50 | 4030011600 | S.CER C1608 JB 1E 104K-T | B | 22.7/17.6 |
| C51 | 4030011600 | S.CER C1608 JB 1E 104K-T | B | 35.5/17.5 |
| C52 | 4030011600 | S.CER C1608 JB 1E 104K-T | B | 15/11.5 |
| C53 | 4030011600 | S.CER C1608 JB 1E 104K-T | B | 22/13.8 |
| C54 | 4030011600 | S.CER C1608 JB 1E 104K-T | T | 43.3/9.9 |
| C55 | 4030011600 | S.CER C1608 JB 1E 104K-T | B | 29.4/13.8 |
| C56 | 4030011600 | S.CER C1608 JB 1E 104K-T | B | 25.1/6.6 |
| C57 | 4030011600 | S.CER C1608 JB 1E 104K-T | B | 29.8/6.2 |
| C58 | 4030011600 | S.CER C1608 JB 1E 104K-T | B | 38.3/6.6 |
| C59 | 4030011600 | S.CER C1608 JB 1E 104K-T | T | 20.3/5.3 |
| C60 | 4510007130 | S.ELE EEFCD 0J 470R | T | 25.4/41.7 |
| C61 | 4550007480 | S.TAN F930J106MAABMA | B | 45.2/29.7 |
| C62 | 4510007130 | S.ELE EEFCD 0J 470R | T | 19.5/41.7 |
| C101 | 4030011600 | S.CER C1608 JB 1E 104K-T | B | 35.7/6.5 |
| C102 | 4550007480 | S.TAN F930J106MAABMA | B | 30.6/2.6 |
| C151 | 4030011600 | S.CER C1608 JB 1E 104K-T | B | 45.5/10.2 |
| C152 | 4030007030 | S.CER C1608 CH 1H 150J-T | B | 46.1/6.2 |
| C153 | 4030007030 | S.CER C1608 CH 1H 150J-T | B | 43.1/8 |
| C171 | 4030011600 | S.CER C1608 JB 1E 104K-T | T | 41.3/2.7 |
| C181 | 4030011600 | S.CER C1608 JB 1E 104K-T | T | 31/4.3 |
| C191 | 4030011600 | S.CER C1608 JB 1E 104K-T | T | 22.6/1.2 |
| C201 | 4030011600 | S.CER C1608 JB 1E 104K-T | B | 42.3/44.3 |
| C301 | 4550007660 | S.TAN F931E105MAABMA | B | 80.4/44.1 |
| C302 | 4550007500 | S.TAN F931D106MBABMA | B | 75.6/44.1 |
| C303 | 4030011600 | S.CER C1608 JB 1E 104K-T | T | 75.7/40.7 |
| C304 | 4550007500 | S.TAN F931D106MBABMA | B | 71.5/44.1 |
| C305 | 4030011600 | S.CER C1608 JB 1E 104K-T | T | 67.6/46.1 |
| C306 | 4030007050 | S.CER C1608 CH 1H 220J-T | T | 72.3/39.8 |
| C341 | 4550007500 | S.TAN F931D106MBABMA | B | 74/34.6 |
| C342 | 4030011600 | S.CER C1608 JB 1E 104K-T | T | 75.5/32.8 |
| C343 | 4550007500 | S.TAN F931D106MBABMA | B | 66.9/36.8 |
| C344 | 4030011600 | S.CER C1608 JB 1E 104K-T | T | 67.2/38.4 |
| C345 | 4550007660 | S.TAN F931E105MAABMA | B | 76.8/38.7 |
| C346 | 4030007140 | S.CER C1608 CH 1H 121J-T | T | 68.5/33.9 |
| C347 | 4030011600 | S.CER C1608 JB 1E 104K-T | T | 67.7/35.9 |
| C348 | 4030007050 | S.CER C1608 CH 1H 220J-T | T | 72/30.6 |
| C371 | 4550007500 | S.TAN F931D106MBABMA | B | 59.8/43.8 |
| C372 | 4030011600 | S.CER C1608 JB 1E 104K-T | T | 63.7/42.9 |
| C373 | 4550007500 | S.TAN F931D106MBABMA | B | 50.1/43.9 |
| C374 | 4030011600 | S.CER C1608 JB 1E 104K-T | T | 53.4/45.5 |
| C375 | 4550007660 | S.TAN F931E105MAABMA | B | 66/43.7 |
| C376 | 4030007140 | S.CER C1608 CH 1H 121J-T | T | 56/43.1 |
| C377 | 4030011600 | S.CER C1608 JB 1E 104K-T | T | 55.3/45 |
| C378 | 4030007050 | S.CER C1608 CH 1H 220J-T | T | 59.4/39.8 |
| C401 | 4550007480 | S.TAN F930J106MAABMA | B | 54.9/43.8 |
| C402 | 4030017840 | S.CER C2012 CH 1H 222J-T | T | 58.1/37.6 |
| C403 | 4550007480 | S.TAN F930J106MAABMA | B | 63.1/35.2 |
| C404 | 4030011810 | S.CER C1608 JB 1A 224K-T | T | 61.5/37.4 |
| C405 | 4550007480 | S.TAN F930J106MAABMA | B | 58.3/36 |
| C406 | 4030011810 | S.CER C1608 JB 1A 224K-T | T | 64.5/32 |
| C407 | 4550007480 | S.TAN F930J106MAABMA | B | 51.1/36.1 |
| C408 | 4030011600 | S.CER C1608 JB 1E 104K-T | T | 54.1/37.4 |
| C410 | 4030009000 | S.CER C2012 JB 1C 224K-T | T | 61/24 |
| C411 | 4550007480 | S.TAN F930J106MAABMA | B | 62.5/28.3 |
| C412 | 4550007480 | S.TAN F930J106MAABMA | B | 58.3/29.9 |
| C413 | 4030009000 | S.CER C2012 JB 1C 224K-T | T | 64.7/28.6 |
| C414 | 4030011600 | S.CER C1608 JB 1E 104K-T | T | 54.2/24.5 |
| C415 | 4550007520 | S.TAN F931A106MAABMA | B | 52.6/29.2 |
| C416 | 4550007480 | S.TAN F930J106MAABMA | B | 56.1/24.4 |
| C417 | 4030017840 | S.CER C2012 CH 1H 222J-T | T | 57.4/24 |
| C450 | 4030011600 | S.CER C1608 JB 1E 104K-T | T | 44.2/39.7 |
| C451 | 4030011600 | S.CER C1608 JB 1E 104K-T | T | 42.9/37.8 |
| C452 | 4030006860 | S.CER C1608 JB 1H 102K-T | T | 42.9/41.9 |
| C453 | 4030007050 | S.CER C1608 CH 1H 220J-T | B | 45.8/36.8 |
| C551 | 4030011600 | S.CER C1608 JB 1E 104K-T | T | 48/1.7 |
| C552 | 4550007520 | S.TAN F931A106MAABMA | B | 49.8/3.3 |
| C553 | 4550007520 | S.TAN F931A106MAABMA | B | 57.2/8.9 |
| C554 | 4550007520 | S.TAN F931A106MAABMA | B | 55/3.3 |
| C555 | 4030011600 | S.CER C1608 JB 1E 104K-T | T | 58.6/2.5 |
| C556 | 4030011600 | S.CER C1608 JB 1E 104K-T | T | 58.6/5.8 |
| C557 | 4030011600 | S.CER C1608 JB 1E 104K-T | B | 57.7/4.1 |
| C601 | 4550007660 | S.TAN F931E105MAABMA | B | 50.5/9.4 |
| C602 | 4030018510 | S.CER C2012 CH 1H 682J-T | T | 48.3/14.2 |
| C603 | 4550007500 | S.TAN F931D106MBABMA | B | 50.4/15.8 |
| C604 | 4030011600 | S.CER C1608 JB 1E 104K-T | T | 49.6/11.8 |
| C605 | 4030011600 | S.CER C1608 JB 1E 104K-T | T | 52.7/11.8 |
| C606 | 4550007500 | S.TAN F931D106MBABMA | B | 51/20.8 |
| C607 | 4030018510 | S.CER C2012 CH 1H 682J-T | T | 53.2/20.1 |
| C608 | 4030007050 | S.CER C1608 CH 1H 220J-T | T | 57.6/14.5 |
| C651 | 4550007660 | S.TAN F931E105MAABMA | B | 60/8.9 |
| C652 | 4030018510 | S.CER C2012 CH 1H 682J-T | T | 60.1/5.3 |

M.=Mounted side (T: Mounted on the Top side, B: Mounted on the Bottom side)
S.=Surface mount

## [DSP-TX BOARD]

| REF NO. | ORDER NO. | DESCRIPTION | M. | H/V LOCATION |
|---|---|---|---|---|
| C653 | 4550007500 | S.TAN F931D106MBABMA | B | 62.5/3.3 |
| C654 | 4030011600 | S.CER C1608 JB 1E 104K-T | T | 62.5/1.6 |
| C655 | 4030011600 | S.CER C1608 JB 1E 104K-T | T | 69.8/1.6 |
| C656 | 4550007500 | S.TAN F931D106MBABMA | B | 63.6/9.2 |
| C657 | 4030018510 | S.CER C2012 CH 1H 682J-T | T | 66.4/10 |
| C658 | 4030007050 | S.CER C1608 CH 1H 220J-T | T | 69.9/4.4 |
| C701 | 4030017840 | S.CER C2012 CH 1H 222J-T | T | 62.1/18.5 |
| C702 | 4030017840 | S.CER C2012 CH 1H 222J-T | T | 59.2/11.1 |
| C703 | 4550007500 | S.TAN F931D106MBABMA | B | 58.7/15.3 |
| C704 | 4030011600 | S.CER C1608 JB 1E 104K-T | T | 62.4/11.3 |
| C705 | 4030011600 | S.CER C1608 JB 1E 104K-T | T | 65.5/18.2 |
| C706 | 4550007500 | S.TAN F931D106MBABMA | B | 57.7/19.3 |
| C707 | 4030007050 | S.CER C1608 CH 1H 220J-T | T | 67.8/14.1 |
| C801 | 4030006860 | S.CER C1608 JB 1H 102K-T | T | 64.2/24.6 |
| C802 | 4030011600 | S.CER C1608 JB 1E 104K-T | T | 73.3/25 |
| C803 | 4550007480 | S.TAN F930J106MAABMA | B | 76.7/16.6 |
| C804 | 4030011600 | S.CER C1608 JB 1E 104K-T | T | 72/27.9 |
| C805 | 4550007520 | S.TAN F931A106MAABMA | B | 67.2/28.6 |
| C806 | 4030011600 | S.CER C1608 JB 1E 104K-T | T | 72.5/23.1 |
| C807 | 4550007500 | S.TAN F931D106MBABMA | B | 68.4/23.6 |
| C808 | 4030007050 | S.CER C1608 CH 1H 220J-T | T | 69/30.4 |
| C831 | 4030006860 | S.CER C1608 JB 1H 102K-T | T | 69.7/17.9 |
| C832 | 4030011600 | S.CER C1608 JB 1E 104K-T | T | 76.5/16.3 |
| C833 | 4550007480 | S.TAN F930J106MAABMA | B | 69.7/16.8 |
| C834 | 4030011600 | S.CER C1608 JB 1E 104K-T | T | 77.8/17.2 |
| C835 | 4550007520 | S.TAN F931A106MAABMA | B | 64/19.7 |
| C836 | 4030011600 | S.CER C1608 JB 1E 104K-T | T | 76.5/13.7 |
| C837 | 4550007500 | S.TAN F931D106MBABMA | B | 64.7/15.3 |
| C838 | 4030007050 | S.CER C1608 CH 1H 220J-T | T | 73.6/20.5 |
| C871 | 4550007520 | S.TAN F931A106MAABMA | B | 75.5/29.4 |
| C872 | 4030011600 | S.CER C1608 JB 1E 104K-T | T | 73.5/27.9 |
| C873 | 4550007500 | S.TAN F931D106MBABMA | B | 75.6/24.3 |
| C874 | 4030011600 | S.CER C1608 JB 1E 104K-T | T | 78.2/21.5 |
| C875 | 4030007050 | S.CER C1608 CH 1H 220J-T | T | 77.2/30.9 |
| C921 | 4550007510 | S.TAN F931C106MBABMA | B | 69.3/3.8 |
| C922 | 4030011600 | S.CER C1608 JB 1E 104K-T | T | 72.8/3.5 |
| C923 | 4550002830 | S.TAN TEESVD2 1V 685M12R | B | 75.4/6 |
| C924 | 4030011600 | S.CER C1608 JB 1E 104K-T | T | 81.8/8 |
| C925 | 4550007510 | S.TAN F931C106MBABMA | B | 71.1/9.3 |
| C926 | 4030011600 | S.CER C1608 JB 1E 104K-T | T | 72.8/9 |
| C927 | 4550002830 | S.TAN TEESVD2 1V 685M12R | B | 80.7/6 |
| C928 | 4030011600 | S.CER C1608 JB 1E 104K-T | T | 81.8/4.6 |
| C961 | 4030011600 | S.CER C1608 JB 1E 104K-T | B | 11.4/14.9 |
| C962 | 4550007520 | S.TAN F931A106MAABMA | B | 12.2/18.6 |
| C963 | 4030011600 | S.CER C1608 JB 1E 104K-T | B | 10.4/24.8 |
| C964 | 4550007520 | S.TAN F931A106MAABMA | B | 11.4/28.9 |
| | | | | |
| J201 | 6510024450 | S.CNR IC197-3202-2000 | B | 29.5/42 |
| J921 | 6910013900 | CNR IMSA-9180S-22A | | |
| J961 | 6910012460 | CNR IMSA-9180S-30A | | |

## [SCOPE UNIT]

| REF NO. | ORDER NO. | DESCRIPTION | M. | H/V LOCATION |
|---|---|---|---|---|
| IC1 | 1110006180 | S.IC UPG2009TB-E3 | T | 85.1/9.6 |
| IC2 | 1180001771 | S.IC TA79L05F (TE12L,F) | T | 24.5/95.6 |
| IC31 | 1110006180 | S.IC UPG2009TB-E3 | T | 86.5/14.1 |
| IC201 | 1180002650 | S.REG SI-3012KS-TL | T | 116.4/64.6 |
| IC401 | 1110006131 | S.IC UPC4094G2-E1-A | T | 15.6/88.6 |
| IC403 | 1110006131 | S.IC UPC4094G2-E1-A | T | 26.9/88.6 |
| IC404 | 1110006131 | S.IC UPC4094G2-E1-A | T | 44/87.6 |
| IC405 | 1110002700 | S.IC NJM2904M-TE1 | T | 39.2/70.4 |
| IC501 | 1190002031 | S.IC AD7650ASTZ | T | 55.5/79.2 |
| IC502 | 1130006891 | S.IC TC7S04FU (TE85R,F) | T | 57.7/88 |
| IC505 | 1180002631 | S.REG AD1582BRTZ-REEL7 | T | 55.4/94.6 |
| IC601 | 1140012221 | S.IC TMS320C6711DZDP200 | T | 88.4/81.4 |
| IC602 | 1130011930 | S.IC SN74LVC1G04DCKR | T | 68.2/67.4 |
| IC603 | 1130011930 | S.IC SN74LVC1G04DCKR | T | 70.7/70.3 |
| IC604 | 1130008040 | S.IC TC7SH04FU | B | 67.4/74.6 |
| IC607 | 1110006411 | S.IC R3111N111A-TR-F | B | 104.1/81.1 |
| IC671 | 1130012394 | S.IC AT49BV001AN-551TV | T | 112.8/82.9 |
| IC801 | 1130009230 | S.IC LMX2306TMX/NOPB | T | 65.6/36.5 |
| IC803 | 1130009691 | S.IC TC74HCT7007AF (F) | B | 68/29 |
| IC820 | 1190001961 | S.IC AD9857ASTZ | T | 93.7/35.6 |
| IC903 | 1120002921 | S.IC ADM202EARNZ | T | 96.9/109.1 |
| IC904 | 1130005721 | S.IC TC7W04F (TE12L,F) | T | 107.5/113 |
| IC905 | 1130005252 | S.IC TC74HC08AF (EL,F) | B | 97/109.6 |
| IC906 | 1130009831 | S.IC TC74VHCT04AF (F) | B | 108.4/109.6 |
| | | | | |
| Q1 | 1530002060 | S.TR 2SC4081 T106 R | T | 67.4/6.3 |
| Q2 | 1530003851 | S.TR 2SC5551F-TD-E | T | 45.7/7.4 |
| Q11 | 1590000680 | S.TR DTC114EUA T106 | T | 78.2/7.4 |
| Q12 | 1590000680 | S.TR DTC114EUA T106 | T | 92.1/6.5 |
| Q31 | 1590000680 | S.TR DTC114EUA T106 | T | 78.4/3.5 |
| Q32 | 1590000680 | S.TR DTC114EUA T106 | T | 92.7/3.5 |
| Q33 | 1590000680 | S.TR DTC114EUA T106 | T | 93/15.3 |
| Q101 | 1530003151 | S.TR 2SC4673D-TD-E | T | 28.8/18.2 |
| Q201 | 1560000561 | S.FET 2SK882-GR (TE85L,F) | T | 11.4/40.4 |
| Q202 | 1560000561 | S.FET 2SK882-GR (TE85L,F) | T | 10.1/45.2 |
| Q301 | 1530003151 | S.TR 2SC4673D-TD-E | T | 21.4/67.9 |
| Q701 | 1530003221 | S.TR 2SC4406-4-TL-E | T | 75.3/54.2 |
| Q720 | 1530003221 | S.TR 2SC4406-4-TL-E | T | 101.9/45.5 |
| Q810 | 1530003221 | S.TR 2SC4406-4-TL-E | T | 73.1/37.7 |
| Q821 | 1560000331 | S.FET 2SK210-GR (TE85R,F) | T | 43.3/45.7 |
| Q841 | 1530002060 | S.TR 2SC4081 T106 R | T | 41.5/37.2 |
| Q842 | 1530003431 | S.TR 2SC5226-4-TL-E | T | 27.4/31.6 |
| Q843 | 1530003431 | S.TR 2SC5226-4-TL-E | T | 25/39.9 |
| Q872 | 1590000680 | S.TR DTC114EUA T106 | T | 30.2/32.6 |
| Q903 | 1530002280 | S.TR 2SC4081 T106 S | B | 130.2/111.8 |
| Q904 | 1510000510 | S.TR 2SA1576A T106R | B | 126.1/105.7 |
| Q921 | 1590001330 | S.TR DTA114EUA T106 | T | 54.5/112.7 |
| Q922 | 1590000680 | S.TR DTC114EUA T106 | T | 50.7/112.7 |
| Q923 | 1590001330 | S.TR DTA114EUA T106 | T | 42.9/113.5 |
| Q924 | 1590000680 | S.TR DTC114EUA T106 | T | 40.3/113.5 |
| | | | | |
| D1 | 1750000971 | S.DIO CPH5513-TL-E | T | 79.7/14.9 |
| D2 | 1750000971 | S.DIO CPH5513-TL-E | T | 72.5/15.9 |
| D3 | 1750000441 | S.DIO 1SV263-TL-E | T | 72.1/12.8 |
| D4 | 1750000431 | S.DIO HSB88WSTR-E | T | 10.3/68.3 |
| D11 | 1790000620 | S.DIO MA77 (TX) | T | 83.2/4.5 |
| D12 | 1790000620 | S.DIO MA77 (TX) | T | 87.2/4.5 |
| D101 | 1750000431 | S.DIO HSB88WSTR-E | T | 25.7/8.2 |
| D201 | 1710000840 | S.DIO 1SR154-400 TE25 | B | 120.3/65 |
| D401 | 1790001250 | S.DIO MA2S111-(TX) | T | 41.2/77.1 |
| D402 | 1790001250 | S.DIO MA2S111-(TX) | T | 39.9/75.2 |
| D403 | 1790001250 | S.DIO MA2S111-(TX) | T | 33.4/69.5 |
| D821 | 1750000680 | S.VCP 1SV232 (TPH2)/(TPH3) | T | 57.9/43.2 |
| D822 | 1750000680 | S.VCP 1SV232 (TPH2)/(TPH3) | T | 57.9/44.9 |
| D902 | 1750000550 | S.DIO 1SS355 TE-17 | B | 129.7/109.5 |
| | | | | |
| FI201 | 2030000290 | S.MLH FL-357 (45 MHz) | T | 9.3/29.6 |
| FI501 | 2040000790 | S.LC EXCCET103U | T | 71.2/76 |
| | | | | |
| L1 | 6200001831 | S.COL NLV32T-100J | T | 76.3/12.8 |
| L2 | 6200001831 | S.COL NLV32T-100J | T | 75.1/19.1 |
| L3 | 6200001831 | S.COL NLV32T-100J | B | 70.7/15.1 |
| L4 | 6200001831 | S.COL NLV32T-100J | T | 67.3/12.1 |
| L5 | 6150004280 | COL LS-484B (C-14927) | | |
| L6 | 6150004280 | COL LS-484B (C-14927) | | |
| L7 | 6200003261 | S.COL NLV32T-101J | T | 52/16.6 |
| L8 | 6140003790 | COL LR-442 | | |
| L9 | 6200001831 | S.COL NLV32T-100J | T | 41.2/7.5 |
| L10 | 6200001831 | S.COL NLV32T-100J | T | 41.2/3.2 |
| L11 | 6200001831 | S.COL NLV32T-100J | T | 57.3/3.5 |
| L12 | 6200010450 | S.COL C2520C-R82G-A | T | 57.6/15.5 |
| L13 | 6200010940 | S.COL C2520C-39NG-A | T | 68.3/20 |
| L14 | 6200010860 | S.COL C2520C-R10G-A | T | 64.1/19.2 |
| L31 | 6200001831 | S.COL NLV32T-100J | B | 82.6/1.8 |
| L32 | 6200001831 | S.COL NLV32T-100J | B | 78.8/5.2 |
| L33 | 6200001831 | S.COL NLV32T-100J | B | 86.6/6 |
| L34 | 6200001831 | S.COL NLV32T-100J | B | 90.7/3.6 |
| L51 | 6200001831 | S.COL NLV32T-100J | B | 120.5/26 |

M.=Mounted side (T: Mounted on the Top side, B: Mounted on the Bottom side)
S.=Surface mount

## [SCOPE UNIT]

| REF NO. | ORDER NO. | DESCRIPTION | M. | H/V LOCATION |
|---|---|---|---|---|
| L52 | 6200001831 | S.COL NLV32T-100J | B | 126.5/39.4 |
| L53 | 6200001831 | S.COL NLV32T-100J | T | 47.7/64.3 |
| L54 | 6200001831 | S.COL NLV32T-100J | T | 50.7/64.3 |
| L55 | 6200003950 | S.COL HF50ACC 322513-T | B | 119.3/33.5 |
| L56 | 6200003950 | S.COL HF50ACC 322513-T | T | 116.1/44.6 |
| L57 | 6200003950 | S.COL HF50ACC 322513-T | T | 121.2/27.1 |
| L58 | 6200003950 | S.COL HF50ACC 322513-T | B | 119.3/39.1 |
| L59 | 6200003950 | S.COL HF50ACC 322513-T | T | 119.6/34.4 |
| L60 | 6200003950 | S.COL HF50ACC 322513-T | T | 119.6/37.6 |
| L101 | 6140003530 | COL LR-395 | | |
| L102 | 6140003530 | COL LR-395 | | |
| L103 | 6200003021 | S.COL NLV32T-R33J | T | 22.3/19.7 |
| L104 | 6200001920 | S.COL ELJNC R15K-F | B | 22.7/16.4 |
| L201 | 6150004250 | COL LS-471A (C-14922) | | |
| L202 | 6150004280 | COL LS-484B (C-14927) | | |
| L203 | 6150004280 | COL LS-484B (C-14927) | | |
| L204 | 6200001831 | S.COL NLV32T-100J | B | 3.3/46.6 |
| L205 | 6200002431 | S.COL NLV25T-082J | B | 10.4/17.6 |
| L301 | 6140003530 | COL LR-395 | | |
| L302 | 6140003530 | COL LR-395 | | |
| L303 | 6200003041 | S.COL NLV32T-R68J | T | 21/74.1 |
| L304 | 6200001831 | S.COL NLV32T-100J | B | 23.2/72.6 |
| L401 | 6200003171 | S.COL NLV32T-330J | T | 10.4/83.2 |
| L501 | 6200001831 | S.COL NLV32T-100J | T | 53.8/64.3 |
| L502 | 6200001831 | S.COL NLV32T-100J | B | 57.6/69.6 |
| L551 | 6180003501 | S.COL SLF6028T-100M1R3-PF | T | 105.8/64.4 |
| L552 | 6200001831 | S.COL NLV32T-100J | T | 106.3/69.9 |
| L671 | 6200001831 | S.COL NLV32T-100J | T | 110.9/69.9 |
| L701 | 6200005491 | S.COL NLV32T-331J | T | 76/51.4 |
| L720 | 6200001831 | S.COL NLV32T-100J | T | 82/34.6 |
| L721 | 6200001831 | S.COL NLV32T-100J | T | 109.4/41 |
| L722 | 6200001831 | S.COL NLV32T-100J | T | 110.8/45.2 |
| L761 | 6200003011 | S.COL NLV32T-R27J | T | 106.3/22.3 |
| L762 | 6200003021 | S.COL NLV32T-R33J | T | 102.7/23 |
| L763 | 6200003251 | S.COL NLV32T-R39J | T | 97.9/22.4 |
| L764 | 6200003251 | S.COL NLV32T-R39J | T | 93.6/23.4 |
| L801 | 6200005491 | S.COL NLV32T-331J | T | 69.7/40.9 |
| L802 | 6200005491 | S.COL NLV32T-331J | T | 70.3/26.7 |
| L821 | 6200001831 | S.COL NLV32T-100J | T | 61.7/45.7 |
| L822 | 6190001441 | COL #E526GN-110504 | | |
| L823 | 6200001851 | S.COL NLV32T-5R6J | T | 40.7/42.2 |
| L825 | 6200003261 | S.COL NLV32T-101J | T | 51.7/52.2 |
| L841 | 6200003261 | S.COL NLV32T-101J | B | 26.8/33 |
| L842 | 6200003031 | S.COL NLV32T-R47J | T | 26.8/34.5 |
| L851 | 6200003431 | S.COL NLV32T-R10J | T | 27.4/45 |
| L852 | 6200001471 | S.COL NLV32T-R12J | T | 27/48.9 |
| L902 | 6200003241 | S.COL NLV32T-221J | T | 128.1/107.7 |
| | | | | |
| R1 | 7030003360 | S.RES ERJ3GEYJ 221 V (220) | T | 79.6/12.5 |
| R2 | 7030003480 | S.RES ERJ3GEYJ 222 V (2.2 k) | T | 70.7/10.8 |
| R3 | 7030003440 | S.RES ERJ3GEYJ 102 V (1 k) | T | 70.7/9.5 |
| R4 | 7030003460 | S.RES ERJ3GEYJ 152 V (1.5 k) | T | 67.8/8.2 |
| R5 | 7030003520 | S.RES ERJ3GEYJ 472 V (4.7 k) | T | 66.6/4.4 |
| R6 | 7030003440 | S.RES ERJ3GEYJ 102 V (1 k) | T | 69.4/5 |
| R7 | 7030003290 | S.RES ERJ3GEYJ 560 V (56) | T | 49.8/17.3 |
| R8 | 7030003440 | S.RES ERJ3GEYJ 102 V (1 k) | T | 48.4/3.5 |
| R9 | 7030003500 | S.RES ERJ3GEYJ 332 V (3.3 k) | T | 46/4.2 |
| R11 | 7310005040 | S.TRI RH03ADCJ4X (22 k) | T | 61.7/3.8 |
| R12 | 7030003320 | S.RES ERJ3GEYJ 101 V (100) | T | 46.7/10.6 |
| R14 | 7030003340 | S.RES ERJ3GEYJ 151 V (150) | T | 82.3/2.4 |
| R16 | 7030003440 | S.RES ERJ3GEYJ 102 V (1 k) | T | 80.2/6.7 |
| R17 | 7030003440 | S.RES ERJ3GEYJ 102 V (1 k) | T | 81.5/6.7 |
| R18 | 7030003340 | S.RES ERJ3GEYJ 151 V (150) | T | 87.4/2.4 |
| R20 | 7030003440 | S.RES ERJ3GEYJ 102 V (1 k) | T | 90.2/6.7 |
| R21 | 7030003440 | S.RES ERJ3GEYJ 102 V (1 k) | T | 88.9/6.7 |
| R34 | 7030003440 | S.RES ERJ3GEYJ 102 V (1 k) | T | 78.4/5.5 |
| R35 | 7030003440 | S.RES ERJ3GEYJ 102 V (1 k) | T | 89.4/3.5 |
| R36 | 7030003520 | S.RES ERJ3GEYJ 472 V (4.7 k) | T | 91/14.7 |
| R37 | 7030003500 | S.RES ERJ3GEYJ 332 V (3.3 k) | T | 89.7/14.7 |
| R38 | 7030003520 | S.RES ERJ3GEYJ 472 V (4.7 k) | T | 82/13.9 |
| R39 | 7030003500 | S.RES ERJ3GEYJ 332 V (3.3 k) | T | 83.3/13.9 |
| R51 | 7030003520 | S.RES ERJ3GEYJ 472 V (4.7 k) | T | 80.6/9.8 |
| R52 | 7030003520 | S.RES ERJ3GEYJ 472 V (4.7 k) | T | 90.3/9.9 |
| R53 | 7030003320 | S.RES ERJ3GEYJ 101 V (100) | B | 126/32.3 |
| R54 | 7030003500 | S.RES ERJ3GEYJ 332 V (3.3 k) | T | 81.9/9.8 |
| R55 | 7030003500 | S.RES ERJ3GEYJ 332 V (3.3 k) | T | 88.4/9.8 |
| R61 | 7030003320 | S.RES ERJ3GEYJ 101 V (100) | B | 128.7/49 |
| R62 | 7030003320 | S.RES ERJ3GEYJ 101 V (100) | T | 122.3/50.4 |
| R63 | 7030003320 | S.RES ERJ3GEYJ 101 V (100) | B | 128.7/51 |
| R64 | 7030003320 | S.RES ERJ3GEYJ 101 V (100) | T | 122.3/53.3 |
| R65 | 7030003320 | S.RES ERJ3GEYJ 101 V (100) | B | 128.7/53 |
| R66 | 7030003320 | S.RES ERJ3GEYJ 101 V (100) | T | 123.6/56.7 |
| R71 | 7030003320 | S.RES ERJ3GEYJ 101 V (100) | B | 128.7/55 |
| R72 | 7030003320 | S.RES ERJ3GEYJ 101 V (100) | T | 121.7/47.4 |
| R73 | 7030003320 | S.RES ERJ3GEYJ 101 V (100) | T | 121.7/43.3 |
| R74 | 7030003320 | S.RES ERJ3GEYJ 101 V (100) | B | 128.7/43.4 |
| R75 | 7030003320 | S.RES ERJ3GEYJ 101 V (100) | T | 121.7/44.7 |
| R76 | 7030003320 | S.RES ERJ3GEYJ 101 V (100) | B | 128.7/45.4 |
| R77 | 7030003320 | S.RES ERJ3GEYJ 101 V (100) | T | 121.7/46 |
| R81 | 7030010520 | S.RES ERJ1TYJ 101U (100) | B | 122.9/46.2 |
| R103 | 7030003480 | S.RES ERJ3GEYJ 222 V (2.2 k) | T | 33.8/18 |

## [SCOPE UNIT]

| REF NO. | ORDER NO. | DESCRIPTION | M. | H/V LOCATION |
|---|---|---|---|---|
| R104 | 7030003320 | S.RES ERJ3GEYJ 101 V (100) | T | 25.9/21.9 |
| R105 | 7030003370 | S.RES ERJ3GEYJ 271 V (270) | B | 18.3/14.3 |
| R106 | 7030003230 | S.RES ERJ3GEYJ 180 V (18) | B | 19.1/11.9 |
| R107 | 7030003370 | S.RES ERJ3GEYJ 271 V (270) | B | 18.3/8.4 |
| R108 | 7030003370 | S.RES ERJ3GEYJ 271 V (270) | B | 14.6/8.4 |
| R109 | 7030003230 | S.RES ERJ3GEYJ 180 V (18) | B | 11.2/9.7 |
| R110 | 7030003370 | S.RES ERJ3GEYJ 271 V (270) | B | 11.2/12 |
| R111 | 7030003550 | S.RES ERJ3GEYJ 822 V (8.2 k) | T | 29.8/14.9 |
| R112 | 7030003320 | S.RES ERJ3GEYJ 101 V (100) | T | 33.8/19.3 |
| R113 | 7030003860 | S.RES ERJ3GE JPW V | B | 19.5/18 |
| R201 | 7030003430 | S.RES ERJ3GEYJ 821 V (820) | T | 11.3/37.1 |
| R202 | 7030003430 | S.RES ERJ3GEYJ 821 V (820) | T | 11.3/35.8 |
| R203 | 7030003280 | S.RES ERJ3GEYJ 470 V (47) | B | 3.1/39.8 |
| R204 | 7030003560 | S.RES ERJ3GEYJ 103 V (10 k) | T | 12/45 |
| R205 | 7030003280 | S.RES ERJ3GEYJ 470 V (47) | B | 6.3/46.6 |
| R206 | 7030003380 | S.RES ERJ3GEYJ 331 V (330) | B | 11.4/54.9 |
| R207 | 7030003220 | S.RES ERJ3GEYJ 150 V (15) | B | 9.3/55.7 |
| R208 | 7030003380 | S.RES ERJ3GEYJ 331 V (330) | B | 10.1/57.7 |
| R209 | 7030003640 | S.RES ERJ3GEYJ 473 V (47 k) | B | 9.9/46.6 |
| R210 | 7030003600 | S.RES ERJ3GEYJ 223 V (22 k) | T | 112.9/63.4 |
| R301 | 7030003320 | S.RES ERJ3GEYJ 101 V (100) | T | 9.8/86.7 |
| R302 | 7030003370 | S.RES ERJ3GEYJ 271 V (270) | B | 10.3/75.4 |
| R303 | 7030003230 | S.RES ERJ3GEYJ 180 V (18) | B | 15.2/74.6 |
| R304 | 7030003370 | S.RES ERJ3GEYJ 271 V (270) | B | 19.1/75.4 |
| R305 | 7030003320 | S.RES ERJ3GEYJ 101 V (100) | T | 23.7/73.9 |
| R306 | 7030003480 | S.RES ERJ3GEYJ 222 V (2.2 k) | T | 21.4/63.4 |
| R307 | 7030003550 | S.RES ERJ3GEYJ 822 V (8.2 k) | T | 18.3/66.9 |
| R308 | 7030003340 | S.RES ERJ3GEYJ 151 V (150) | T | 24.4/63.4 |
| R402 | 7030003440 | S.RES ERJ3GEYJ 102 V (1 k) | B | 13.4/89.7 |
| R403 | 7030003440 | S.RES ERJ3GEYJ 102 V (1 k) | B | 16.3/90.4 |
| R404 | 7030003440 | S.RES ERJ3GEYJ 102 V (1 k) | B | 19/86.7 |
| R405 | 7030003440 | S.RES ERJ3GEYJ 102 V (1 k) | B | 22.4/90.5 |
| R410 | 7030003560 | S.RES ERJ3GEYJ 103 V (10 k) | T | 21.3/85.8 |
| R411 | 7030003560 | S.RES ERJ3GEYJ 103 V (10 k) | T | 9.2/91.1 |
| R412 | 7030003560 | S.RES ERJ3GEYJ 103 V (10 k) | T | 13.4/92.1 |
| R413 | 7030003730 | S.RES ERJ3GEYJ 274 V (270 k) | T | 9.8/89.3 |
| R414 | 7030003560 | S.RES ERJ3GEYJ 103 V (10 k) | B | 26.9/88 |
| R415 | 7030003560 | S.RES ERJ3GEYJ 103 V (10 k) | T | 31.6/90 |
| R416 | 7310005130 | S.TRI RH03ADCS5X (470 k) | T | 34.5/87 |
| R417 | 7030003630 | S.RES ERJ3GEYJ 393 V (39 k) | T | 43.1/95.4 |
| R418 | 7030003570 | S.RES ERJ3GEYJ 123 V (12 k) | T | 45.4/92.2 |
| R419 | 7030003220 | S.RES ERJ3GEYJ 150 V (15) | T | 47.9/92.3 |
| R420 | 7030003580 | S.RES ERJ3GEYJ 153 V (15 k) | T | 40.9/81.7 |
| R421 | 7030003560 | S.RES ERJ3GEYJ 103 V (10 k) | T | 40.5/85.5 |
| R422 | 7030003560 | S.RES ERJ3GEYJ 103 V (10 k) | T | 42.6/92.2 |
| R423 | 7030003540 | S.RES ERJ3GEYJ 682 V (6.8 k) | T | 43.1/94.1 |
| R425 | 7310005020 | S.TRI RH03ADC14X (10 k) | T | 45.3/81.2 |
| R426 | 7030003560 | S.RES ERJ3GEYJ 103 V (10 k) | T | 48.7/76.5 |
| R427 | 7030003560 | S.RES ERJ3GEYJ 103 V (10 k) | T | 39.9/77.2 |
| R428 | 7030003680 | S.RES ERJ3GEYJ 104 V (100 k) | T | 37/75.7 |
| R429 | 7030003650 | S.RES ERJ3GEYJ 563 V (56 k) | T | 34.7/67.7 |
| R430 | 7030003740 | S.RES ERJ3GEYJ 334 V (330 k) | T | 38.8/73.9 |
| R431 | 7030003740 | S.RES ERJ3GEYJ 334 V (330 k) | T | 36.2/73.9 |
| R432 | 7030003640 | S.RES ERJ3GEYJ 473 V (47 k) | T | 39.6/81.7 |
| R433 | 7030003680 | S.RES ERJ3GEYJ 104 V (100 k) | T | 38.8/66.4 |
| R434 | 7030003320 | S.RES ERJ3GEYJ 101 V (100) | T | 33.4/66.9 |
| R435 | 7030003680 | S.RES ERJ3GEYJ 104 V (100 k) | T | 40.1/66.4 |
| R436 | 7030003680 | S.RES ERJ3GEYJ 104 V (100 k) | T | 36.9/67 |
| R437 | 7030003680 | S.RES ERJ3GEYJ 104 V (100 k) | T | 43.8/67.7 |
| R438 | 7030003680 | S.RES ERJ3GEYJ 104 V (100 k) | T | 43.8/70.4 |
| R500 | 7030003860 | S.RES ERJ3GE JPW V | T | 53.2/71.7 |
| R501 | 7030003320 | S.RES ERJ3GEYJ 101 V (100) | T | 55.1/73 |
| R502 | 7030003560 | S.RES ERJ3GEYJ 103 V (10 k) | B | 56.3/74.6 |
| R503 | 7030003560 | S.RES ERJ3GEYJ 103 V (10 k) | B | 59.2/75.4 |
| R504 | 7030003560 | S.RES ERJ3GEYJ 103 V (10 k) | T | 60.8/74.2 |
| R505 | 7030003560 | S.RES ERJ3GEYJ 103 V (10 k) | T | 61.6/76 |
| R506 | 7030003560 | S.RES ERJ3GEYJ 103 V (10 k) | B | 57.3/78.2 |
| R507 | 7030003320 | S.RES ERJ3GEYJ 101 V (100) | T | 61.5/87.1 |
| R509 | 7030003640 | S.RES ERJ3GEYJ 473 V (47 k) | T | 60.5/89.8 |
| R602 | 7030003560 | S.RES ERJ3GEYJ 103 V (10 k) | B | 101.3/75.6 |
| R603 | 7030003440 | S.RES ERJ3GEYJ 102 V (1 k) | B | 83.7/77.3 |
| R604 | 7030003560 | S.RES ERJ3GEYJ 103 V (10 k) | B | 92.1/67.4 |
| R605 | 7030003560 | S.RES ERJ3GEYJ 103 V (10 k) | B | 89.8/65.8 |
| R606 | 7030003440 | S.RES ERJ3GEYJ 102 V (1 k) | T | 79.6/95.8 |
| R607 | 7030003440 | S.RES ERJ3GEYJ 102 V (1 k) | B | 77.6/95.9 |
| R608 | 7030003440 | S.RES ERJ3GEYJ 102 V (1 k) | B | 71.8/88.2 |
| R609 | 7030003560 | S.RES ERJ3GEYJ 103 V (10 k) | T | 83.5/65.8 |
| R610 | 7030003800 | S.RES ERJ3GEYJ 105 V (1 M) | T | 70.5/67.6 |
| R611 | 7030004040 | S.RES ERJ3GEYJ 4R7 V (4.7) | T | 66.2/70.3 |
| R612 | 7030004040 | S.RES ERJ3GEYJ 4R7 V (4.7) | T | 67.5/70.3 |
| R615 | 7030003320 | S.RES ERJ3GEYJ 101 V (100) | T | 72.9/65.7 |
| R616 | 7030003520 | S.RES ERJ3GEYJ 472 V (4.7 k) | T | 73.7/93.5 |
| R617 | 7030003520 | S.RES ERJ3GEYJ 472 V (4.7 k) | T | 72.4/93.5 |
| R618 | 7030003560 | S.RES ERJ3GEYJ 103 V (10 k) | B | 81.8/66.8 |
| R619 | 7030003560 | S.RES ERJ3GEYJ 103 V (10 k) | B | 88/66.8 |
| R620 | 7030003440 | S.RES ERJ3GEYJ 102 V (1 k) | B | 73.2/88.9 |
| R621 | 7030003440 | S.RES ERJ3GEYJ 102 V (1 k) | B | 72.6/84.7 |
| R622 | 7030003860 | S.RES ERJ3GE JPW V | B | 111.9/79.5 |
| R623 | 7030003860 | S.RES ERJ3GE JPW V | B | 106.1/78.5 |
| R633 | 7030003560 | S.RES ERJ3GEYJ 103 V (10 k) | B | 74.7/74.4 |
| R634 | 7030003860 | S.RES ERJ3GE JPW V | T | 74/70.4 |
| R635 | 7030003280 | S.RES ERJ3GEYJ 470 V (47) | T | 73.4/68.4 |

M.=Mounted side (T: Mounted on the Top side, B: Mounted on the Bottom side)
S.=Surface mount

## [SCOPE UNIT]

| REF NO. | ORDER NO. | DESCRIPTION | M. | H/V LOCATION |
|---|---|---|---|---|
| R636 | 7030003280 | S.RES ERJ3GEYJ 470 V (47) | T | 72.7/70.4 |
| R701 | 7030003240 | S.RES ERJ3GEYJ 220 V (22) | T | 73/51.7 |
| R702 | 7030003560 | S.RES ERJ3GEYJ 103 V (10 k) | T | 77.3/54.4 |
| R703 | 7030003320 | S.RES ERJ3GEYJ 101 V (100) | T | 72.7/55.1 |
| R704 | 7030003280 | S.RES ERJ3GEYJ 470 V (47) | T | 73.3/57 |
| R705 | 7030003340 | S.RES ERJ3GEYJ 151 V (150) | T | 77.4/57 |
| R720 | 7030003370 | S.RES ERJ3GEYJ 271 V (270) | T | 107/43.2 |
| R721 | 7030003560 | S.RES ERJ3GEYJ 103 V (10 k) | T | 104/45.3 |
| R722 | 7030003340 | S.RES ERJ3GEYJ 151 V (150) | T | 107.2/45.9 |
| R723 | 7030003440 | S.RES ERJ3GEYJ 102 V (1 k) | B | 91.7/28.7 |
| R724 | 7030003440 | S.RES ERJ3GEYJ 102 V (1 k) | B | 91.1/30.6 |
| R725 | 7030003440 | S.RES ERJ3GEYJ 102 V (1 k) | B | 87.6/28.5 |
| R726 | 7030003440 | S.RES ERJ3GEYJ 102 V (1 k) | B | 91.2/26.8 |
| R727 | 7030003440 | S.RES ERJ3GEYJ 102 V (1 k) | B | 94.8/43 |
| R729 | 7030003280 | S.RES ERJ3GEYJ 470 V (47) | T | 98.7/45.6 |
| R730 | 7030003560 | S.RES ERJ3GEYJ 103 V (10 k) | B | 96.4/40.1 |
| R731 | 7030003460 | S.RES ERJ3GEYJ 152 V (1.5 k) | T | 105.1/38.6 |
| R732 | 7030003510 | S.RES ERJ3GEYJ 392 V (3.9 k) | T | 106.5/34.2 |
| R734 | 7030003510 | S.RES ERJ3GEYJ 392 V (3.9 k) | T | 102.5/42.7 |
| R735 | 7030003280 | S.RES ERJ3GEYJ 470 V (47) | T | 106.5/30.9 |
| R736 | 7030003280 | S.RES ERJ3GEYJ 470 V (47) | T | 106.5/32.2 |
| R737 | 7030003440 | S.RES ERJ3GEYJ 102 V (1 k) | T | 88.4/24 |
| R738 | 7030003640 | S.RES ERJ3GEYJ 473 V (47 k) | T | 88.1/46.1 |
| R739 | 7030003510 | S.RES ERJ3GEYJ 392 V (3.9 k) | T | 106.5/35.5 |
| R741 | 7030003860 | S.RES ERJ3GE JPW V | B | 109.8/26.2 |
| R742 | 7030003860 | S.RES ERJ3GE JPW V | T | 86.8/46 |
| R744 | 7030003860 | S.RES ERJ3GE JPW V | T | 87.7/26.2 |
| R745 | 7030003860 | S.RES ERJ3GE JPW V | T | 85/27.5 |
| R748 | 7030003860 | S.RES ERJ3GE JPW V | T | 89.7/24 |
| R764 | 7030003370 | S.RES ERJ3GEYJ 271 V (270) | T | 48/21.5 |
| R765 | 7030003230 | S.RES ERJ3GEYJ 180 V (18) | T | 45.6/20.8 |
| R766 | 7030003370 | S.RES ERJ3GEYJ 271 V (270) | T | 43.4/21.5 |
| R767 | 7030003860 | S.RES ERJ3GE JPW V | T | 95.7/21.5 |
| R771 | 7030003860 | S.RES ERJ3GE JPW V | T | 41/20.8 |
| R801 | 7030003440 | S.RES ERJ3GEYJ 102 V (1 k) | B | 68.1/38 |
| R802 | 7030003440 | S.RES ERJ3GEYJ 102 V (1 k) | B | 71.2/35.6 |
| R803 | 7030003440 | S.RES ERJ3GEYJ 102 V (1 k) | B | 68.1/35.7 |
| R806 | 7030003520 | S.RES ERJ3GEYJ 472 V (4.7 k) | T | 62.4/40.1 |
| R808 | 7030003600 | S.RES ERJ3GEYJ 223 V (22 k) | T | 61.7/42.6 |
| R809 | 7030003840 | S.RES ERJ3GEYJ 225 V (2.2 M) | T | 63.9/41.6 |
| R810 | 7030003370 | S.RES ERJ3GEYJ 271 V (270) | T | 74.1/35.2 |
| R811 | 7030003560 | S.RES ERJ3GEYJ 103 V (10 k) | T | 73.8/40.2 |
| R812 | 7030003280 | S.RES ERJ3GEYJ 470 V (47) | T | 71/31.6 |
| R813 | 7030003340 | S.RES ERJ3GEYJ 151 V (150) | T | 73.8/45.4 |
| R814 | 7030003500 | S.RES ERJ3GEYJ 332 V (3.3 k) | T | 60.3/41.1 |
| R821 | 7030003680 | S.RES ERJ3GEYJ 104 V (100 k) | T | 39.3/45.9 |
| R822 | 7030003680 | S.RES ERJ3GEYJ 104 V (100 k) | T | 46.8/44.6 |
| R823 | 7030003370 | S.RES ERJ3GEYJ 271 V (270) | T | 43.5/41.7 |
| R841 | 7030003200 | S.RES ERJ3GEYJ 100 V (10) | T | 37.9/39.9 |
| R842 | 7030003360 | S.RES ERJ3GEYJ 221 V (220) | T | 42.2/35 |
| R843 | 7030003500 | S.RES ERJ3GEYJ 332 V (3.3 k) | T | 40.1/39.1 |
| R844 | 7030003540 | S.RES ERJ3GEYJ 682 V (6.8 k) | T | 38.6/37.8 |
| R845 | 7030003360 | S.RES ERJ3GEYJ 221 V (220) | T | 38.6/36.5 |
| R846 | 7030003380 | S.RES ERJ3GEYJ 331 V (330) | T | 40.4/32 |
| R847 | 7030003370 | S.RES ERJ3GEYJ 271 V (270) | T | 30.5/30 |
| R848 | 7030003540 | S.RES ERJ3GEYJ 682 V (6.8 k) | T | 28.4/37.3 |
| R849 | 7030003500 | S.RES ERJ3GEYJ 332 V (3.3 k) | T | 30.3/34.8 |
| R850 | 7030003390 | S.RES ERJ3GEYJ 391 V (390) | T | 26.5/37.9 |
| R851 | 7030003360 | S.RES ERJ3GEYJ 221 V (220) | T | 24.4/37.1 |
| R852 | 7030003490 | S.RES ERJ3GEYJ 272 V (2.7 k) | T | 28.4/40 |
| R853 | 7030003510 | S.RES ERJ3GEYJ 392 V (3.9 k) | T | 30.3/41 |
| R854 | 7030003360 | S.RES ERJ3GEYJ 221 V (220) | T | 30.1/42.4 |
| R855 | 7030008180 | S.RES ERJ12YJ331U (330) | T | 42.5/52.9 |
| R856 | 7030003370 | S.RES ERJ3GEYJ 271 V (270) | T | 22.9/60.3 |
| R857 | 7030003230 | S.RES ERJ3GEYJ 180 V (18) | T | 20.7/59.6 |
| R858 | 7030003320 | S.RES ERJ3GEYJ 101 V (100) | T | 20.7/61.1 |
| R859 | 7030003260 | S.RES ERJ3GEYJ 330 V (33) | T | 24.4/44.2 |
| R860 | 7030003400 | S.RES ERJ3GEYJ 471 V (470) | T | 42.4/32 |
| R861 | 7030003860 | S.RES ERJ3GE JPW V | T | 24.4/60.3 |
| R905 | 7030003620 | S.RES ERJ3GEYJ 333 V (33 k) | B | 127/108.8 |
| R906 | 7030003540 | S.RES ERJ3GEYJ 682 V (6.8 k) | B | 128.6/105.8 |
| R907 | 7030003580 | S.RES ERJ3GEYJ 153 V (15 k) | B | 127.2/111.2 |
| R908 | 7030003640 | S.RES ERJ3GEYJ 473 V (47 k) | B | 124.9/108.8 |
| R913 | 7030003370 | S.RES ERJ3GEYJ 271 V (270) | T | 57.4/112.7 |
| R914 | 7030003370 | S.RES ERJ3GEYJ 271 V (270) | T | 45.9/113.5 |
| R951 | 7030003860 | S.RES ERJ3GE JPW V | B | 120.4/122.7 |
| R952 | 7030003860 | S.RES ERJ3GE JPW V | B | 97.5/126.3 |
| R953 | 7030003860 | S.RES ERJ3GE JPW V | B | 97.5/124.7 |
| R954 | 7030003860 | S.RES ERJ3GE JPW V | B | 114.7/103.6 |
| R955 | 7030003860 | S.RES ERJ3GE JPW V | T | 48.6/112.9 |
| R956 | 7030003860 | S.RES ERJ3GE JPW V | T | 39.7/110.6 |
| | | | | |
| C1 | 4030006880 | S.CER C1608 JB 1H 472K-T | T | 84.1/6.7 |
| C2 | 4030006880 | S.CER C1608 JB 1H 472K-T | T | 86.1/6.7 |
| C3 | 4030006880 | S.CER C1608 JB 1H 472K-T | T | 82.8/15.8 |
| C4 | 4030011340 | S.CER C1608 CH 1H 471J-T | T | 76.6/16.1 |
| C5 | 4030011340 | S.CER C1608 CH 1H 471J-T | T | 74.1/12.9 |
| C6 | 4030006880 | S.CER C1608 JB 1H 472K-T | T | 74.9/16.1 |
| C7 | 4030006880 | S.CER C1608 JB 1H 472K-T | T | 70.1/12.8 |
| C8 | 4030006880 | S.CER C1608 JB 1H 472K-T | T | 71.3/20 |
| C9 | 4030006880 | S.CER C1608 JB 1H 472K-T | T | 70/15.7 |

## [SCOPE UNIT]

| REF NO. | ORDER NO. | DESCRIPTION | M. | H/V LOCATION |
|---|---|---|---|---|
| C10 | 4030011600 | S.CER C1608 JB 1E 104K-T | T | 67.8/9.5 |
| C11 | 4030009510 | S.CER C1608 CH 1H 010B-T | B | 58.9/16.3 |
| C12 | 4030007040 | S.CER C1608 CH 1H 180J-T | B | 61.9/10 |
| C13 | 4030007040 | S.CER C1608 CH 1H 180J-T | B | 53.2/10 |
| C14 | 4030011340 | S.CER C1608 CH 1H 471J-T | B | 47.6/15 |
| C15 | 4030006880 | S.CER C1608 JB 1H 472K-T | T | 40.2/16 |
| C16 | 4030006880 | S.CER C1608 JB 1H 472K-T | T | 49.9/3.5 |
| C17 | 4030006880 | S.CER C1608 JB 1H 472K-T | B | 38.6/10 |
| C18 | 4030006960 | S.CER C1608 CH 1H 050C-T | T | 44/10.6 |
| C21 | 4030006880 | S.CER C1608 JB 1H 472K-T | T | 78.8/57 |
| C22 | 4030006880 | S.CER C1608 JB 1H 472K-T | B | 93.1/11.6 |
| C23 | 4030011600 | S.CER C1608 JB 1E 104K-T | T | 90.5/12.8 |
| C24 | 4030006880 | S.CER C1608 JB 1H 472K-T | T | 85.4/11.8 |
| C31 | 4030006880 | S.CER C1608 JB 1H 472K-T | T | 78.3/9.4 |
| C32 | 4030006880 | S.CER C1608 JB 1H 472K-T | T | 82.8/6.7 |
| C33 | 4030006880 | S.CER C1608 JB 1H 472K-T | T | 90.3/8.6 |
| C34 | 4030006880 | S.CER C1608 JB 1H 472K-T | T | 87.6/6.7 |
| C35 | 4030006900 | S.CER C1608 JB 1H 103K-T | T | 83.6/2.4 |
| C36 | 4030006900 | S.CER C1608 JB 1H 103K-T | T | 80.3/3.3 |
| C37 | 4030006900 | S.CER C1608 JB 1H 103K-T | T | 86.1/2.4 |
| C38 | 4030006900 | S.CER C1608 JB 1H 103K-T | T | 90.7/3.5 |
| C39 | 4030006860 | S.CER C1608 JB 1H 102K-T | T | 88.4/14.7 |
| C40 | 4030006860 | S.CER C1608 JB 1H 102K-T | T | 84.6/13.9 |
| C41 | 4610001830 | S.TRI TZB4S100AB10R00 | T | 57.5/19.3 |
| C42 | 4030007030 | S.CER C1608 CH 1H 150J-T | T | 68.7/15.7 |
| C43 | 4030007120 | S.CER C1608 CH 1H 820J-T | T | 67.9/17.7 |
| C44 | 4030007100 | S.CER C1608 CH 1H 560J-T | T | 67/15.7 |
| C45 | 4030007040 | S.CER C1608 CH 1H 180J-T | T | 64.9/16.4 |
| C46 | 4030008750 | S.CER C1608 CH 1H 360J-T | T | 64.9/14.9 |
| C51 | 4030006860 | S.CER C1608 JB 1H 102K-T | T | 83.2/9.8 |
| C52 | 4030006860 | S.CER C1608 JB 1H 102K-T | T | 87.1/9.8 |
| C53 | 4510008540 | S.ELE EEE1CA100SR | T | 31.7/95.8 |
| C54 | 4510008540 | S.ELE EEE1CA100SR | T | 46.9/69.3 |
| C55 | 4030011600 | S.CER C1608 JB 1E 104K-T | T | 20.4/94.8 |
| C56 | 4510008540 | S.ELE EEE1CA100SR | T | 16.6/95.8 |
| C57 | 4030011600 | S.CER C1608 JB 1E 104K-T | T | 27.9/95.9 |
| C101 | 4030006880 | S.CER C1608 JB 1H 472K-T | T | 33.8/16.7 |
| C102 | 4030007150 | S.CER C1608 CH 1H 151J-T | T | 24.6/19 |
| C103 | 4030011600 | S.CER C1608 JB 1E 104K-T | T | 24.6/21.9 |
| C106 | 4030006880 | S.CER C1608 JB 1H 472K-T | T | 33.8/20.6 |
| C107 | 4030007100 | S.CER C1608 CH 1H 560J-T | T | 23.1/16.4 |
| C108 | 4030007110 | S.CER C1608 CH 1H 680J-T | B | 23.7/21.2 |
| C109 | 4030007140 | S.CER C1608 CH 1H 121J-T | B | 22.4/18.7 |
| C110 | 4030007110 | S.CER C1608 CH 1H 680J-T | B | 21.6/21.2 |
| C201 | 4030007040 | S.CER C1608 CH 1H 180J-T | T | 10.8/24.5 |
| C202 | 4030007040 | S.CER C1608 CH 1H 180J-T | T | 4.7/30.3 |
| C204 | 4030006880 | S.CER C1608 JB 1H 472K-T | T | 11.3/34.5 |
| C205 | 4030007070 | S.CER C1608 CH 1H 330J-T | B | 5.8/39.8 |
| C206 | 4030006880 | S.CER C1608 JB 1H 472K-T | T | 11.3/38.5 |
| C207 | 4030006960 | S.CER C1608 CH 1H 050C-T | T | 11.2/42.3 |
| C208 | 4030007070 | S.CER C1608 CH 1H 330J-T | B | 8.4/51 |
| C209 | 4030006880 | S.CER C1608 JB 1H 472K-T | T | 7.6/46.1 |
| C210 | 4030011600 | S.CER C1608 JB 1E 104K-T | B | 2.1/50.2 |
| C211 | 4030009550 | S.CER C1608 CH 1H 2R5B-T | T | 10.8/23.2 |
| C212 | 4030006940 | S.CER C1608 CH 1H 030C-T | T | 4.7/28.9 |
| C213 | 4550007320 | S.TAN F930J226MAABMA | T | 111.2/63.3 |
| C214 | 4550007320 | S.TAN F930J226MAABMA | B | 117.7/65.4 |
| C215 | 4030011600 | S.CER C1608 JB 1E 104K-T | T | 119.9/66.4 |
| C216 | 4030017490 | S.CER C1608 JB 1A 105K-T | T | 112.9/66.4 |
| C301 | 4030007040 | S.CER C1608 CH 1H 180J-T | T | 18.8/70.5 |
| C302 | 4030006880 | S.CER C1608 JB 1H 472K-T | T | 23.7/71.1 |
| C303 | 4030006880 | S.CER C1608 JB 1H 472K-T | T | 19.9/63.4 |
| C304 | 4030006880 | S.CER C1608 JB 1H 472K-T | T | 22.9/63.4 |
| C401 | 4030008850 | S.CER C1608 JB 1H 123K-T | T | 11.1/86.7 |
| C403 | 4030018610 | S.CER C1608 CH 1H 182J-T | B | 15.6/87.5 |
| C404 | 4030018580 | S.CER C1608 CH 1H 821J-T | T | 20.9/89.2 |
| C405 | 4030007140 | S.CER C1608 CH 1H 121J-T | T | 20.9/87.9 |
| C406 | 4030017840 | S.CER C2012 CH 1H 222J-T | B | 22.6/86.7 |
| C407 | 4030017840 | S.CER C2012 CH 1H 222J-T | B | 22.6/88.7 |
| C408 | 4030007010 | S.CER C1608 CH 1H 100D-T | T | 21.6/90.5 |
| C409 | 4030007140 | S.CER C1608 CH 1H 121J-T | T | 21.6/91.8 |
| C410 | 4030011600 | S.CER C1608 JB 1E 104K-T | T | 17.7/92.1 |
| C411 | 4030011600 | S.CER C1608 JB 1E 104K-T | T | 13.4/85.2 |
| C420 | 4030011600 | S.CER C1608 JB 1E 104K-T | T | 8.5/89.3 |
| C421 | 4030006920 | S.CER C1608 CH 1H 010C-T | T | 11.1/89.3 |
| C422 | 4030006920 | S.CER C1608 CH 1H 010C-T | T | 31.6/87.2 |
| C423 | 4030011600 | S.CER C1608 JB 1E 104K-T | T | 29/92.1 |
| C424 | 4030011600 | S.CER C1608 JB 1E 104K-T | T | 24.7/85.2 |
| C425 | 4030011600 | S.CER C1608 JB 1E 104K-T | T | 40.2/95.4 |
| C426 | 4030006900 | S.CER C1608 JB 1H 103K-T | T | 47.4/89.7 |
| C427 | 4030011600 | S.CER C1608 JB 1E 104K-T | T | 35.9/81 |
| C428 | 4510008550 | S.ELE EEE1HA010SR | T | 38/92.2 |
| C429 | 4030011600 | S.CER C1608 JB 1E 104K-T | T | 47.4/85.4 |
| C431 | 4030006900 | S.CER C1608 JB 1H 103K-T | T | 38.5/77.2 |
| C432 | 4030011600 | S.CER C1608 JB 1E 104K-T | T | 41.4/73.9 |
| C433 | 4510008540 | S.ELE EEE1CA100SR | T | 31.4/73.2 |
| C434 | 4030011600 | S.CER C1608 JB 1E 104K-T | T | 40.5/88.5 |
| C501 | 4030011600 | S.CER C1608 JB 1E 104K-T | T | 52.5/73 |
| C502 | 4510008540 | S.ELE EEE1CA100SR | T | 52.2/68.5 |
| C503 | 4510008540 | S.ELE EEE1CA100SR | T | 59.3/70.5 |
| C504 | 4030011600 | S.CER C1608 JB 1E 104K-T | T | 62/78.6 |
| C505 | 4510008540 | S.ELE EEE1CA100SR | T | 59.5/64.5 |

M.=Mounted side (T: Mounted on the Top side, B: Mounted on the Bottom side)
S.=Surface mount

## [SCOPE UNIT]

| REF NO. | ORDER NO. | DESCRIPTION | M. | H/V LOCATION |
|---|---|---|---|---|
| C506 | 4030011600 | S.CER C1608 JB 1E 104K-T | T | 61.6/81.8 |
| C507 | 4510008580 | S.ELE EEE0JA470SR | T | 51/87.4 |
| C508 | 4030017490 | S.CER C1608 JB 1A 105K-T | T | 49.3/82.9 |
| C509 | 4030011600 | S.CER C1608 JB 1E 104K-T | T | 59.6/87.9 |
| C521 | 4510009280 | S.ELE EEE1EA4R7SR | T | 59.6/93.9 |
| C522 | 4030011600 | S.CER C1608 JB 1E 104K-T | T | 55.5/92.2 |
| C523 | 4510008550 | S.ELE EEE1HA010SR | T | 51.1/93.9 |
| C524 | 4030011600 | S.CER C1608 JB 1E 104K-T | T | 55.2/97 |
| C551 | 4550006960 | S.TAN TEESVB2 0G 107M8R | T | 99.1/64.3 |
| C601 | 4030011600 | S.CER C1608 JB 1E 104K-T | B | 99.4/93.9 |
| C602 | 4030011600 | S.CER C1608 JB 1E 104K-T | B | 98.6/67.3 |
| C603 | 4030011600 | S.CER C1608 JB 1E 104K-T | B | 100.9/91.6 |
| C604 | 4030011600 | S.CER C1608 JB 1E 104K-T | B | 101.5/68.5 |
| C605 | 4030011600 | S.CER C1608 JB 1E 104K-T | B | 93.2/85.9 |
| C606 | 4030011600 | S.CER C1608 JB 1E 104K-T | B | 93.8/84.5 |
| C607 | 4030011600 | S.CER C1608 JB 1E 104K-T | B | 93/80.1 |
| C608 | 4030011600 | S.CER C1608 JB 1E 104K-T | B | 93.8/78.8 |
| C609 | 4030011600 | S.CER C1608 JB 1E 104K-T | B | 93.7/75.8 |
| C610 | 4030011600 | S.CER C1608 JB 1E 104K-T | B | 91.3/86.8 |
| C611 | 4030011600 | S.CER C1608 JB 1E 104K-T | B | 90.3/75.9 |
| C612 | 4030011600 | S.CER C1608 JB 1E 104K-T | B | 87.8/93.9 |
| C613 | 4030011600 | S.CER C1608 JB 1E 104K-T | B | 88.4/86.8 |
| C614 | 4030011600 | S.CER C1608 JB 1E 104K-T | B | 88.5/74 |
| C615 | 4030011600 | S.CER C1608 JB 1E 104K-T | B | 86.9/86 |
| C616 | 4030011600 | S.CER C1608 JB 1E 104K-T | B | 87.1/75.9 |
| C617 | 4030011600 | S.CER C1608 JB 1E 104K-T | T | 87.9/67 |
| C618 | 4030011600 | S.CER C1608 JB 1E 104K-T | B | 83.9/86 |
| C619 | 4030011600 | S.CER C1608 JB 1E 104K-T | B | 83.5/75.7 |
| C620 | 4030011600 | S.CER C1608 JB 1E 104K-T | B | 81.1/86 |
| C621 | 4030011600 | S.CER C1608 JB 1E 104K-T | B | 81.9/83.6 |
| C622 | 4030011600 | S.CER C1608 JB 1E 104K-T | B | 81.9/81.9 |
| C623 | 4030011600 | S.CER C1608 JB 1E 104K-T | B | 81/77.2 |
| C624 | 4030011600 | S.CER C1608 JB 1E 104K-T | B | 81/74.5 |
| C625 | 4030011600 | S.CER C1608 JB 1E 104K-T | B | 74.5/91.6 |
| C626 | 4030011600 | S.CER C1608 JB 1E 104K-T | B | 74.5/77.2 |
| C627 | 4030011600 | S.CER C1608 JB 1E 104K-T | B | 78.3/67.4 |
| C628 | 4030011600 | S.CER C1608 JB 1E 104K-T | B | 75.5/93.8 |
| C629 | 4030011600 | S.CER C1608 JB 1E 104K-T | B | 73.8/69.4 |
| C630 | 4030011600 | S.CER C1608 JB 1E 104K-T | T | 74/76.5 |
| C631 | 4030011600 | S.CER C1608 JB 1E 104K-T | T | 74/80.8 |
| C632 | 4030011600 | S.CER C1608 JB 1E 104K-T | T | 73.9/73.2 |
| C633 | 4030011600 | S.CER C1608 JB 1E 104K-T | T | 102.8/90.4 |
| C634 | 4030011600 | S.CER C1608 JB 1E 104K-T | T | 102.9/76.2 |
| C635 | 4030011600 | S.CER C1608 JB 1E 104K-T | B | 101.2/83.5 |
| C636 | 4030011600 | S.CER C1608 JB 1E 104K-T | B | 101.2/80.3 |
| C637 | 4030011600 | S.CER C1608 JB 1E 104K-T | B | 101.4/72 |
| C638 | 4030011600 | S.CER C1608 JB 1E 104K-T | B | 96/93.9 |
| C639 | 4030011600 | S.CER C1608 JB 1E 104K-T | T | 104/87.3 |
| C640 | 4030011600 | S.CER C1608 JB 1E 104K-T | B | 93/82.8 |
| C641 | 4030011600 | S.CER C1608 JB 1E 104K-T | B | 93.8/87.5 |
| C642 | 4030011600 | S.CER C1608 JB 1E 104K-T | B | 93.8/81.4 |
| C643 | 4030011600 | S.CER C1608 JB 1E 104K-T | B | 93/77.2 |
| C644 | 4030011600 | S.CER C1608 JB 1E 104K-T | B | 93/74.5 |
| C645 | 4030011600 | S.CER C1608 JB 1E 104K-T | B | 94.8/67.4 |
| C646 | 4030011600 | S.CER C1608 JB 1E 104K-T | B | 92.8/93.9 |
| C647 | 4030011600 | S.CER C1608 JB 1E 104K-T | T | 94.3/67 |
| C648 | 4030011600 | S.CER C1608 JB 1E 104K-T | B | 89.7/86 |
| C649 | 4030011600 | S.CER C1608 JB 1E 104K-T | B | 85.4/67.5 |
| C650 | 4030011600 | S.CER C1608 JB 1E 104K-T | B | 85.5/86.7 |
| C651 | 4030011600 | S.CER C1608 JB 1E 104K-T | B | 85.4/74 |
| C652 | 4030011600 | S.CER C1608 JB 1E 104K-T | B | 79.4/93.8 |
| C653 | 4030011600 | S.CER C1608 JB 1E 104K-T | B | 82.5/86.8 |
| C654 | 4030011600 | S.CER C1608 JB 1E 104K-T | T | 78.7/66.9 |
| C655 | 4030011600 | S.CER C1608 JB 1E 104K-T | B | 81.9/79.9 |
| C656 | 4030011600 | S.CER C1608 JB 1E 104K-T | B | 74.5/84.6 |
| C657 | 4030011600 | S.CER C1608 JB 1E 104K-T | B | 74.5/80.3 |
| C658 | 4030011600 | S.CER C1608 JB 1E 104K-T | B | 74.6/71.4 |
| C659 | 4030011600 | S.CER C1608 JB 1E 104K-T | B | 74.5/88.1 |
| C660 | 4510008540 | S.ELE EEE1CA100SR | T | 67.6/75 |
| C661 | 4030011600 | S.CER C1608 JB 1E 104K-T | B | 72.8/74.7 |
| C662 | 4030011600 | S.CER C1608 JB 1E 104K-T | T | 88.3/95.9 |
| C663 | 4030011600 | S.CER C1608 JB 1E 104K-T | T | 68.8/70.3 |
| C664 | 4030011600 | S.CER C1608 JB 1E 104K-T | T | 66.2/67.6 |
| C665 | 4030011600 | S.CER C1608 JB 1E 104K-T | B | 67.5/76.8 |
| C666 | 4550007310 | S.TAN F930J227MNMBMA | B | 108.6/73.9 |
| C667 | 4550007310 | S.TAN F930J227MNMBMA | B | 108.6/68.6 |
| C671 | 4030011600 | S.CER C1608 JB 1E 104K-T | T | 114.2/70.1 |
| C672 | 4030006880 | S.CER C1608 JB 1H 472K-T | T | 72.9/64.4 |
| C701 | 4030011600 | S.CER C1608 JB 1E 104K-T | T | 76/57 |
| C702 | 4030011600 | S.CER C1608 JB 1E 104K-T | T | 72.7/53.6 |
| C703 | 4030011600 | S.CER C1608 JB 1E 104K-T | T | 74.6/57 |
| C720 | 4030006880 | S.CER C1608 JB 1H 472K-T | T | 82.9/38.1 |
| C721 | 4030011600 | S.CER C1608 JB 1E 104K-T | T | 83.2/40.2 |
| C722 | 4510008540 | S.ELE EEE1CA100SR | T | 82.6/44.1 |
| C723 | 4030006880 | S.CER C1608 JB 1H 472K-T | T | 109.9/37.4 |
| C724 | 4030011600 | S.CER C1608 JB 1E 104K-T | T | 109.9/38.9 |
| C725 | 4510008540 | S.ELE EEE1CA100SR | T | 110.1/33.2 |
| C726 | 4030006880 | S.CER C1608 JB 1H 472K-T | T | 108.6/45.9 |
| C727 | 4030006880 | S.CER C1608 JB 1H 472K-T | T | 105.6/45.3 |
| C730 | 4030011600 | S.CER C1608 JB 1E 104K-T | T | 84.2/35.3 |
| C731 | 4030011600 | S.CER C1608 JB 1E 104K-T | T | 84.2/38.1 |
| C733 | 4030011600 | S.CER C1608 JB 1E 104K-T | T | 93.4/26.3 |

## [SCOPE UNIT]

| REF NO. | ORDER NO. | DESCRIPTION | M. | H/V LOCATION |
|---|---|---|---|---|
| C734 | 4030011600 | S.CER C1608 JB 1E 104K-T | T | 103.1/29.9 |
| C736 | 4030011600 | S.CER C1608 JB 1E 104K-T | T | 96.8/44.8 |
| C737 | 4030011600 | S.CER C1608 JB 1E 104K-T | T | 103/40.9 |
| C738 | 4030011600 | S.CER C1608 JB 1E 104K-T | T | 96.5/26.3 |
| C739 | 4030011600 | S.CER C1608 JB 1E 104K-T | T | 99.6/26.3 |
| C740 | 4030011600 | S.CER C1608 JB 1E 104K-T | T | 103.1/37.4 |
| C741 | 4030011600 | S.CER C1608 JB 1E 104K-T | T | 92.6/45.1 |
| C742 | 4030011600 | S.CER C1608 JB 1E 104K-T | T | 90/45.1 |
| C750 | 4030006900 | S.CER C1608 JB 1H 103K-T | T | 103.2/34.5 |
| C751 | 4030006900 | S.CER C1608 JB 1H 103K-T | T | 105.1/37.3 |
| C760 | 4030006880 | S.CER C1608 JB 1H 472K-T | T | 110.9/20.8 |
| C761 | 4030007150 | S.CER C1608 CH 1H 151J-T | T | 110.1/22.8 |
| C762 | 4030007110 | S.CER C1608 CH 1H 680J-T | T | 108.4/21.6 |
| C763 | 4030011280 | S.CER C1608 CH 1H 271J-T | T | 106/25.1 |
| C764 | 4030007080 | S.CER C1608 CH 1H 390J-T | T | 103.4/20.8 |
| C765 | 4030011830 | S.CER C1608 CH 1H 301J-T | T | 100/24.3 |
| C766 | 4030007020 | S.CER C1608 CH 1H 120J-T | T | 100/21.7 |
| C767 | 4030007170 | S.CER C1608 CH 1H 221J-T | T | 95.7/24.3 |
| C768 | 4030011280 | S.CER C1608 CH 1H 271J-T | T | 93.5/20.4 |
| C769 | 4030006860 | S.CER C1608 JB 1H 102K-T | T | 91.4/21.3 |
| C770 | 4030011280 | S.CER C1608 CH 1H 271J-T | T | 89.3/20.5 |
| C801 | 4030006880 | S.CER C1608 JB 1H 472K-T | T | 66.2/40 |
| C802 | 4510008540 | S.ELE EEE1CA100SR | T | 69/44.8 |
| C803 | 4030006900 | S.CER C1608 JB 1H 103K-T | T | 60.4/37.1 |
| C805 | 4550007660 | S.TAN F931E105MAABMA | T | 58.5/38.7 |
| C806 | 4340000240 | S.MLR ECHU 1C 682JX5 | T | 64.2/43.3 |
| C807 | 4030006880 | S.CER C1608 JB 1H 472K-T | T | 69.6/33.3 |
| C808 | 4030006880 | S.CER C1608 JB 1H 472K-T | B | 62.7/32 |
| C809 | 4510008540 | S.ELE EEE1CA100SR | T | 64.9/25.7 |
| C810 | 4030006880 | S.CER C1608 JB 1H 472K-T | T | 73.8/42.8 |
| C811 | 4030006880 | S.CER C1608 JB 1H 472K-T | T | 73.3/32.9 |
| C812 | 4030006880 | S.CER C1608 JB 1H 472K-T | T | 73.8/30.9 |
| C813 | 4030011600 | S.CER C1608 JB 1E 104K-T | T | 65.9/31.8 |
| C821 | 4030007060 | S.CER C1608 CH 1H 270J-T | T | 57.8/46.5 |
| C822 | 4030007100 | S.CER C1608 CH 1H 560J-T | T | 54.4/45.7 |
| C823 | 4030006960 | S.CER C1608 CH 1H 050C-T | T | 55.7/45.7 |
| C824 | 4610001850 | S.TRI TZB4R200AB10R00 | T | 50.6/44.7 |
| C825 | 4030007130 | S.CER C1608 CH 1H 101J-T | T | 46.9/46.8 |
| C826 | 4030007060 | S.CER C1608 CH 1H 270J-T | T | 40.9/45.9 |
| C827 | 4030007020 | S.CER C1608 CH 1H 120J-T | T | 45.5/44.6 |
| C828 | 4030006880 | S.CER C1608 JB 1H 472K-T | T | 43.5/43.1 |
| C829 | 4030009500 | S.CER C1608 CH 1H 0R5B-T | T | 37.9/42.9 |
| C830 | 4030006860 | S.CER C1608 JB 1H 102K-T | T | 47.9/52.8 |
| C831 | 4030006880 | S.CER C1608 JB 1H 472K-T | T | 46.4/52.8 |
| C832 | 4510008500 | S.ELE EEE1CA101WP | T | 49.3/57.6 |
| C833 | 4510008540 | S.ELE EEE1CA100SR | T | 40.3/58 |
| C842 | 4030006880 | S.CER C1608 JB 1H 472K-T | T | 39.4/35 |
| C843 | 4030006860 | S.CER C1608 JB 1H 102K-T | T | 23.8/34.3 |
| C844 | 4030006880 | S.CER C1608 JB 1H 472K-T | T | 24.5/32.4 |
| C845 | 4510008520 | S.ELE EEE1CA470SP | T | 17.7/35.3 |
| C846 | 4030006880 | S.CER C1608 JB 1H 472K-T | T | 38.4/31.3 |
| C847 | 4030006880 | S.CER C1608 JB 1H 472K-T | T | 30.3/36.1 |
| C848 | 4030006880 | S.CER C1608 JB 1H 472K-T | T | 30.3/38.3 |
| C849 | 4030006880 | S.CER C1608 JB 1H 472K-T | T | 27/40 |
| C850 | 4030006880 | S.CER C1608 JB 1H 472K-T | T | 30.3/39.7 |
| C851 | 4030006880 | S.CER C1608 JB 1H 472K-T | T | 25.1/42.3 |
| C852 | 4030007120 | S.CER C1608 CH 1H 820J-T | T | 30/44.2 |
| C853 | 4030007070 | S.CER C1608 CH 1H 330J-T | T | 24.4/46.8 |
| C854 | 4030007140 | S.CER C1608 CH 1H 121J-T | T | 30/45.8 |
| C855 | 4030007020 | S.CER C1608 CH 1H 120J-T | T | 30.1/48.1 |
| C856 | 4030007090 | S.CER C1608 CH 1H 470J-T | T | 30.2/50.4 |
| C862 | 4030006880 | S.CER C1608 JB 1H 472K-T | T | 60.4/34.5 |
| C911 | 4030008680 | S.CER C2012 JF 1C 105Z-T | T | 92.4/112.7 |
| C912 | 4030008680 | S.CER C2012 JF 1C 105Z-T | T | 92.4/109 |
| C913 | 4030008680 | S.CER C2012 JF 1C 105Z-T | T | 92.4/105.5 |
| C914 | 4030008680 | S.CER C2012 JF 1C 105Z-T | T | 96.8/115.2 |
| C915 | 4030008680 | S.CER C2012 JF 1C 105Z-T | T | 101.5/114.1 |
| C916 | 4030011600 | S.CER C1608 JB 1E 104K-T | T | 108.7/116.4 |
| C917 | 4030011600 | S.CER C1608 JB 1E 104K-T | B | 108.2/115.9 |
| C918 | 4030011600 | S.CER C1608 JB 1E 104K-T | B | 91.3/112.6 |
| | | | | |
| J1 | 6510007020 | CNR TMP-J01X-V6 | | |
| J2 | 6510007020 | CNR TMP-J01X-V6 | | |
| J3 | 6510007020 | CNR TMP-J01X-V6 | | |
| J4 | 6510020001 | S.CNR 52808-3071 (3090) | T | 127.9/41.5 |
| J11 | 6510007020 | CNR TMP-J01X-V6 | | |
| J671 | 6510024450 | S.CNR IC197-3202-2000 | T | 112.8/82.9 |
| J901 | 6510023720 | CNR LGY6501-0600C | | |
| J902 | 6510023120 | CNR CD6109SA1J0 | | |
| J903 | 6510024040 | CNR TM11R-5M2-88-LP | | |
| J904 | 6510024031 | CNR UBA-4R-D10T-1 (LF) (SN) | | |
| J905 | 6450001940 | CNR KEY-15S-2A3A | | |
| J906 | 6510019971 | S.CNR 52808-1071 | T | 129/97.7 |
| J907 | 6510020251 | S.CNR B9B-PH-SM4-TB (LF) (SN) | T | 50.7/105.2 |
| J908 | 6510022311 | S.CNR B5B-PH-SM4-TB (LF) (SN) | T | 88.7/110.1 |
| J909 | 6510003470 | CNR B11B-EH-S | | |
| J910 | 6510019421 | S.CNR B8B-ZR-SM4-TF (LF) (SN) | T | 109.6/104.7 |
| | | | | |
| DS901 | 5040002930 | S.LED SML-512MW T86 | T | 57.1/115.2 |
| DS902 | 5040002930 | S.LED SML-512MW T86 | T | 46/115.1 |

M.=Mounted side (T: Mounted on the Top side, B: Mounted on the Bottom side)
S.=Surface mount

## [SCOPE UNIT]

| REF NO. | ORDER NO. | DESCRIPTION | M. | H/V LOCATION |
|---|---|---|---|---|
| EP901 | 6910012350 | S.BEA MMZ1608Y 102BT | B | 131.1/119.6 |
| EP902 | 6910012350 | S.BEA MMZ1608Y 102BT | B | 122.5/122.7 |
| EP903 | 6910012350 | S.BEA MMZ1608Y 102BT | T | 81.3/114.1 |
| EP904 | 6910012350 | S.BEA MMZ1608Y 102BT | T | 82.6/114.1 |
| EP905 | 6910012350 | S.BEA MMZ1608Y 102BT | B | 79.7/113.7 |
| EP906 | 6910012350 | S.BEA MMZ1608Y 102BT | T | 81.9/110.1 |
| EP907 | 6910012350 | S.BEA MMZ1608Y 102BT | B | 83.8/111.5 |
| EP908 | 6910012350 | S.BEA MMZ1608Y 102BT | B | 85.1/111.5 |

## [LOGIC UNIT]

| REF NO. | ORDER NO. | DESCRIPTION | M. | H/V LOCATION |
|---|---|---|---|---|
| IC1 | 1140011551 | S.IC MT48LC16M16A2P-75 | B | 59.3/91.9 |
| IC2 | 1140011551 | S.IC MT48LC16M16A2P-75 | T | 59.3/99 |
| IC51 | 1130011591 | S.IC IDT70V24L15PFG | B | 95.5/56 |
| IC52 | 1140009781 | S.IC XC9572XL-10TQG100C | B | 116.5/56 |
| IC53 | 1110005821 | S.IC R3112N281A-TR-F | T | 142.2/100.9 |
| IC54 | 1130007431 | S.IC TC7S14FU (TE85R,F) | T | 146.5/100.6 |
| IC55 | 1130008040 | S.IC TC7SH04FU | T | 97.9/34.4 |
| IC56 | 1130010110 | S.IC TC7WH04FU (TE12L) | B | 35/25.1 |
| IC101 | 1130011010 | S.IC SN74CBTLV3257PWR | T | 25.2/75.3 |
| IC102 | 1130006441 | S.IC TC7S08F (TE85R,F) | T | 62/39 |
| IC103 | 1140011561 | S.IC HD6417751RBP200V | T | 53.5/64.9 |
| IC104 | 1130008361 | S.IC TC7SHU04FU (TE85L,JF) | T | 8.1/60.8 |
| IC105 | 1130012241 | S.IC CY2292FXC (SX-2590J) | T | 12.6/69 |
| IC106 | 1130011110 | S.IC TC74VCX04FT (EL) | T | 10/77.1 |
| IC201 | 1140011551 | S.IC MT48LC16M16A2P-75 | B | 128/77.3 |
| IC202 | 1140011551 | S.IC MT48LC16M16A2P-75 | B | 128.1/95.5 |
| IC203 | 1140011570 | S.IC HD64404BTD | T | 97.4/78.4 |
| IC204 | 1140011581 | S.IC ADV7123KSTZ50 | T | 207.1/29.6 |
| IC205 | 1130011940 | S.IC TC7SZ04F (TE85L) | T | 195.9/26.4 |
| IC206 | 1130012150 | S.IC SN74ACT04PWR | T | 196/19.9 |
| IC207 | 1130005721 | S.IC TC7W04F (TE12L,F) | B | 212.2/38.2 |
| IC208 | 1130011951 | S.IC UPD1687G-E1-A | B | 219.1/39.2 |
| IC209 | 1190001920 | S.IC AK5355-VT-E2 | B | 109.8/22.9 |
| IC210 | 1190001920 | S.IC AK5355-VT-E2 | B | 120.7/22.9 |
| IC211 | 1190001910 | S.IC AK4384-VT-E2 | B | 131.3/32.6 |
| IC212 | 1190001910 | S.IC AK4384-VT-E2 | B | 119.1/33.4 |
| IC401 | 1130010970 | S.IC PCI1410APGE | B | 23.5/48.5 |
| IC402 | 1130011960 | S.IC TPS2211AIDBR | B | 21.8/31.2 |
| IC403 | 1130009570 | S.IC BR93LC46F-WE2 | T | 24.2/67.3 |
| IC404 | 1130010990 | S.IC RTL8139C+ | B | 23/76.5 |
| IC601 | 1130008040 | S.IC TC7SH04FU | B | 169.3/55.8 |
| IC602 | 1130008711 | S.IC TC7SET04FU (T5L,JF) | B | 169.3/53.3 |
| IC603 | 1110004770 | S.IC BU9480F-E2 | T | 176/57 |
| IC604 | 1140011590 | S.IC HD64F2377VFQ33V | B | 87/30.5 |
| IC605 | 1140009781 | S.IC XC9572XL-10TQG100C | B | 141/57 |
| IC607 | 1130006441 | S.IC TC7S08F (TE85R,F) | B | 59.6/22.6 |
| IC608 | 1130006441 | S.IC TC7S08F (TE85R,F) | B | 63.3/22.6 |
| IC609 | 1130005252 | S.IC TC74HC08AF (EL,F) | B | 60/29.8 |
| IC610 | 1140008650 | S.IC HN58X2464TI | B | 54/37.4 |
| IC801 | 1180002020 | S.REG BA033FP-E2 | B | 144.2/112.5 |
| IC802 | 1180001541 | S.IC TC78L08F (TE12L,F) | T | 131.1/111.6 |
| IC821 | 1110002700 | S.IC NJM2904M-TE1 | B | 16.9/105 |
| IC851 | 1110003870 | S.IC NJM2058M-TE1 | B | 186.3/56.1 |
| IC852 | 1110003870 | S.IC NJM2058M-TE1 | B | 135.5/12.6 |
| IC853 | 1110003870 | S.IC NJM2058M-TE1 | B | 114.5/10.1 |
| IC854 | 1130005721 | S.IC TC7W04F (TE12L,F) | B | 161.4/40.6 |
| | | | | |
| Q601 | 1530002060 | S.TR 2SC4081 T106 R | B | 173.3/53.3 |
| Q602 | 1510000510 | S.TR 2SA1576A T106R | B | 173.2/57.2 |
| Q802 | 1530002060 | S.TR 2SC4081 T106 R | T | 159.1/70.3 |
| Q803 | 1540000441 | S.TR 2SD1619T-TD-E | B | 160.1/70.9 |
| Q804 | 1540000441 | S.TR 2SD1619T-TD-E | B | 166.7/70.8 |
| Q805 | 1530002060 | S.TR 2SC4081 T106 R | T | 165.7/70.3 |
| Q806 | 1540000441 | S.TR 2SD1619T-TD-E | B | 173.3/70.8 |
| Q807 | 1530002060 | S.TR 2SC4081 T106 R | T | 172.3/70.3 |
| Q808 | 1590001330 | S.TR DTA114EUA T106 | B | 157.7/30.1 |
| Q809 | 1590001330 | S.TR DTA114EUA T106 | B | 157.7/27.5 |
| Q810 | 1540000550 | S.TR 2SD1664 T100Q | T | 160.2/78 |
| Q821 | 1520000651 | S.TR 2SB1201S-TL-E | B | 28.9/108.4 |
| Q822 | 1530002060 | S.TR 2SC4081 T106 R | B | 25.5/103.6 |
| Q901 | 1590001960 | S.TR XP4311 (TX) | B | 187.9/88.3 |
| Q902 | 1590001960 | S.TR XP4311 (TX) | B | 188.9/79.7 |
| Q903 | 1590001960 | S.TR XP4311 (TX) | B | 193.9/88.3 |
| Q904 | 1590001960 | S.TR XP4311 (TX) | B | 192.9/79.7 |
| | | | | |
| D51 | 1750000550 | S.DIO 1SS355 TE-17 except [FRA] | T | 126.1/48.7 |
| D52 | 1750000550 | S.DIO 1SS355 TE-17 [FRA], [KOR], [ESP], [UK] only | T | 126.1/50.5 |
| D53 | 1750000550 | S.DIO 1SS355 TE-17 [USA], [EUR], [UK] only | T | 126.1/52.3 |
| D54 | 1750000550 | S.DIO 1SS355 TE-17 except [FRA] | T | 126.1/54.1 |

## [LOGIC UNIT]

| REF NO. | ORDER NO. | DESCRIPTION | M. | H/V LOCATION |
|---|---|---|---|---|
| D55 | 1750000550 | S.DIO 1SS355 TE-17 [EUR], [ITR], [ESP], [UK] only | T | 124.7/55.9 |
| D56 | 1750000550 | S.DIO 1SS355 TE-17 [FRA], [KOR], [ESP], [UK] only | T | 124.7/57.7 |
| D57 | 1750000550 | S.DIO 1SS355 TE-17 [USA], [EUR], [UK] only | T | 124.7/59.5 |
| D58 | 1750000550 | S.DIO 1SS355 TE-17 except [FRA] | T | 124.7/61.3 |
| D59 | 1750000550 | S.DIO 1SS355 TE-17 [EUR], [ITR], [ESP], [UK] only | T | 124.7/63.1 |
| D60 | 1750000550 | S.DIO 1SS355 TE-17 | T | 130.1/48.7 |
| D61 | 1750000550 | S.DIO 1SS355 TE-17 | T | 130.1/50.5 |
| D62 | 1750000550 | S.DIO 1SS355 TE-17 | T | 130.1/52.3 |
| D65 | 1750000550 | S.DIO 1SS355 TE-17 | T | 128.9/57.7 |
| D66 | 1750000550 | S.DIO 1SS355 TE-17 [EUR], [FRA], [ITR], [UK] only | T | 128.9/59.5 |
| D67 | 1750000550 | S.DIO 1SS355 TE-17 | T | 128.9/61.3 |
| D68 | 1750000550 | S.DIO 1SS355 TE-17 | T | 128.9/63.1 |
| D201 | 1790000980 | S.DIO MA742 (TX) | B | 214.6/32.4 |
| D202 | 1790000980 | S.DIO MA742 (TX) | B | 214.6/29.4 |
| D203 | 1790000980 | S.DIO MA742 (TX) | B | 214.6/26.4 |
| D204 | 1790000980 | S.DIO MA742 (TX) | T | 201.5/16.9 |
| D205 | 1790000980 | S.DIO MA742 (TX) | T | 201.5/19.8 |
| D206 | 1790000980 | S.DIO MA742 (TX) | B | 218/7.4 |
| D207 | 1790000980 | S.DIO MA742 (TX) | B | 220.9/7.4 |
| D208 | 1790000980 | S.DIO MA742 (TX) | B | 228/7.4 |
| D209 | 1790000980 | S.DIO MA742 (TX) | B | 230.8/7.4 |
| D601 | 1750000550 | S.DIO 1SS355 TE-17 | B | 175.5/52.5 |
| D801 | 1750000370 | S.DIO DA221 TL | B | 159.1/66.5 |
| D802 | 1750000370 | S.DIO DA221 TL | B | 165.7/66.5 |
| D803 | 1750000370 | S.DIO DA221 TL | B | 172.3/66.5 |
| D804 | 1750000271 | S.DIO 1SS301 (TE85R,F) | B | 170/64.1 |
| D805 | 1790001611 | S.DIO 1SS385 (TE85L,F) | B | 157.3/38.2 |
| D806 | 1790001611 | S.DIO 1SS385 (TE85L,F) | B | 157.3/40.3 |
| D821 | 1730002340 | S.ZEN MA8047-M (TX) | B | 22.4/104.6 |
| D851 | 1750000550 | S.DIO 1SS355 TE-17 | B | 180.9/50.2 |
| D852 | 1750000550 | S.DIO 1SS355 TE-17 | B | 191.8/50 |
| D853 | 1790000980 | S.DIO MA742 (TX) | B | 122/18.5 |
| D854 | 1790000980 | S.DIO MA742 (TX) | B | 119.5/18.5 |
| D855 | 1790000980 | S.DIO MA742 (TX) | B | 107/18.4 |
| D856 | 1790000980 | S.DIO MA742 (TX) | B | 104.5/18.4 |
| D857 | 1750000550 | S.DIO 1SS355 TE-17 | B | 189.9/61.9 |
| D858 | 1750000550 | S.DIO 1SS355 TE-17 | B | 182.2/61.9 |
| D860 | 1790000980 | S.DIO MA742 (TX) | T | 97.5/26.3 |
| D861 | 1790000980 | S.DIO MA742 (TX) | T | 97.5/31.3 |
| D862 | 1790000980 | S.DIO MA742 (TX) | T | 97.9/23.7 |
| D863 | 1790000980 | S.DIO MA742 (TX) | T | 97.5/28.8 |
| D864 | 1790000980 | S.DIO MA742 (TX) | T | 100.4/23.7 |
| D865 | 1790000980 | S.DIO MA742 (TX) | T | 94.3/24.7 |
| D866 | 1790000980 | S.DIO MA742 (TX) | T | 94.3/27.2 |
| D867 | 1790000980 | S.DIO MA742 (TX) | T | 102.9/23.7 |
| D901 | 1790000980 | S.DIO MA742 (TX) | T | 188/31.2 |
| | | | | |
| X101 | 6050011610 | S.XTL CR-751 (25.000 MHz) | T | 2.9/63.1 |
| X201 | 6050010680 | S.XTL CR-628 (24.576 MHz) | T | 103.9/94.6 |
| X202 | 6050011910 | S.XTL CR-780 (48 MHz) | T | 100.2/60.6 |
| X601 | 6050011810 | S.XTL CR-755 (15.9744 MHz) | T | 81.9/13.6 |
| | | | | |
| L203 | 6200002631 | S.COL NLV25T-R10J | B | 222.2/32.6 |
| L204 | 6200002631 | S.COL NLV25T-R10J | B | 222.2/29.6 |
| L205 | 6200002631 | S.COL NLV25T-R10J | B | 222.2/26.6 |
| L801 | 6200003261 | S.COL NLV32T-101J | B | 66.9/123.5 |
| L803 | 6180003321 | S.COL SLF6028T-150M1R0-PF | B | 88.7/112.9 |
| L804 | 6180003321 | S.COL SLF6028T-150M1R0-PF | B | 102.5/112.9 |
| L805 | 6180003321 | S.COL SLF6028T-150M1R0-PF | B | 95.8/112.9 |
| L806 | 6180003321 | S.COL SLF6028T-150M1R0-PF | B | 109/112.9 |
| L807 | 6180003321 | S.COL SLF6028T-150M1R0-PF | B | 115.7/112.9 |
| L808 | 6200003590 | S.COL EXCCL3225U1 | T | 92.1/115.8 |
| L809 | 6200003590 | S.COL EXCCL3225U1 | B | 93.1/123.1 |
| L810 | 6200003590 | S.COL EXCCL3225U1 | B | 87.7/123.2 |
| L811 | 6200001831 | S.COL NLV32T-100J | B | 127.9/22.6 |
| L821 | 6200003590 | S.COL EXCCL3225U1 | B | 121.2/112.7 |
| L822 | 6200003590 | S.COL EXCCL3225U1 | T | 125/115.8 |
| L823 | 6200009790 | S.COL BLM31PG121SN1 | T | 18.2/25.6 |
| L824 | 6200003590 | S.COL EXCCL3225U1 | B | 130.1/115.5 |
| L825 | 6200003590 | S.COL EXCCL3225U1 | B | 133.6/116.1 |
| L826 | 6180003321 | S.COL SLF6028T-150M1R0-PF | B | 179.9/15.5 |
| L827 | 6200003590 | S.COL EXCCL3225U1 | T | 120.4/115.8 |
| L832 | 6200003590 | S.COL EXCCL3225U1 | B | 80.1/122.1 |
| L833 | 6200003590 | S.COL EXCCL3225U1 | B | 75.6/122.1 |
| L834 | 6200003590 | S.COL EXCCL3225U1 | B | 125.6/112.2 |
| L835 | 6200003590 | S.COL EXCCL3225U1 | B | 125.6/115.3 |
| L901 | 6200003590 | S.COL EXCCL3225U1 | B | 214.4/74.4 |
| L902 | 6200003590 | S.COL EXCCL3225U1 | B | 214.4/78.2 |
| L903 | 6200003590 | S.COL EXCCL3225U1 | B | 206.5/80 |
| L904 | 6200003590 | S.COL EXCCL3225U1 | B | 214.4/81.2 |
| L905 | 6200003590 | S.COL EXCCL3225U1 | B | 21/114.8 |
| L906 | 6200003590 | S.COL EXCCL3225U1 | B | 24/114.8 |
| L907 | 6200003590 | S.COL EXCCL3225U1 | B | 27/114.8 |
| L908 | 6200003590 | S.COL EXCCL3225U1 | B | 30/114.8 |
| L909 | 6200003261 | S.COL NLV32T-101J | B | 181.3/82.6 |

M.=Mounted side (T: Mounted on the Top side, B: Mounted on the Bottom side)
S.=Surface mount

## [LOGIC UNIT]

| REF NO. | ORDER NO. | DESCRIPTION | M. | H/V LOCATION |
|---|---|---|---|---|
| L910 | 6200003590 | S.COL EXCCL3225U1 | B | 195.7/82.4 |
| L911 | 6200003590 | S.COL EXCCL3225U1 | B | 221.8/76.5 |
| L912 | 6200003590 | S.COL EXCCL3225U1 | B | 230.4/76.8 |
| L913 | 6200003590 | S.COL EXCCL3225U1 | B | 230.4/63 |
| L914 | 6200003590 | S.COL EXCCL3225U1 | B | 221.8/64 |
| L915 | 6200003590 | S.COL EXCCL3225U1 | B | 230.4/66 |
| L916 | 6200003590 | S.COL EXCCL3225U1 | B | 221.8/67 |
| L917 | 6200003590 | S.COL EXCCL3225U1 | T | 162.2/21.7 |
| L918 | 6200003590 | S.COL EXCCL3225U1 | T | 186.4/18.7 |
| L919 | 6200003590 | S.COL EXCCL3225U1 | T | 186.4/22.4 |
| L920 | 6200003590 | S.COL EXCCL3225U1 | T | 162.3/24.7 |
| L1101 | 6200003590 | S.COL EXCCL3225U1 | T | 40.5/25.8 |
| R1 | 7030003520 | S.RES ERJ3GEYJ 472 V (4.7 k) | T | 91.5/101.3 |
| R51 | 7030003520 | S.RES ERJ3GEYJ 472 V (4.7 k) | T | 143/76.8 |
| R52 | 7030003560 | S.RES ERJ3GEYJ 103 V (10 k) | T | 138.6/100.6 |
| R55 | 7030003440 | S.RES ERJ3GEYJ 102 V (1 k) | B | 126.4/51.5 |
| R56 | 7030003440 | S.RES ERJ3GEYJ 102 V (1 k) | B | 123.5/46.1 |
| R57 | 7030003680 | S.RES ERJ3GEYJ 104 V (100 k) | B | 31.3/25 |
| R58 | 7030003680 | S.RES ERJ3GEYJ 104 V (100 k) | B | 30/25 |
| R101 | 7030003680 | S.RES ERJ3GEYJ 104 V (100 k) | T | 19.3/74.8 |
| R102 | 7030003520 | S.RES ERJ3GEYJ 472 V (4.7 k) | T | 31/73.7 |
| R103 | 7030003520 | S.RES ERJ3GEYJ 472 V (4.7 k) | T | 31/75.7 |
| R104 | 7030003520 | S.RES ERJ3GEYJ 472 V (4.7 k) | T | 19.3/73.5 |
| R105 | 7030003520 | S.RES ERJ3GEYJ 472 V (4.7 k) | T | 19.3/76.1 |
| R106 | 7030003560 | S.RES ERJ3GEYJ 103 V (10 k) | B | 54.6/60.1 |
| R107 | 7030003560 | S.RES ERJ3GEYJ 103 V (10 k) | B | 49.4/60.1 |
| R108 | 7030003560 | S.RES ERJ3GEYJ 103 V (10 k) | B | 48.4/49.5 |
| R109 | 7030003560 | S.RES ERJ3GEYJ 103 V (10 k) | B | 52/60.1 |
| R110 | 7030003560 | S.RES ERJ3GEYJ 103 V (10 k) | T | 54.9/49.3 |
| R111 | 7030003560 | S.RES ERJ3GEYJ 103 V (10 k) | B | 54.6/58.8 |
| R112 | 7030003560 | S.RES ERJ3GEYJ 103 V (10 k) | T | 53.6/49.3 |
| R113 | 7030003560 | S.RES ERJ3GEYJ 103 V (10 k) | B | 49.4/58.8 |
| R114 | 7030003560 | S.RES ERJ3GEYJ 103 V (10 k) | B | 45.8/49.5 |
| R115 | 7030003560 | S.RES ERJ3GEYJ 103 V (10 k) | B | 49.4/62.7 |
| R116 | 7030003560 | S.RES ERJ3GEYJ 103 V (10 k) | B | 49.4/61.4 |
| R117 | 7030003260 | S.RES ERJ3GEYJ 330 V (33) | B | 43.2/49.5 |
| R118 | 7030003560 | S.RES ERJ3GEYJ 103 V (10 k) | B | 49.4/64 |
| R119 | 7030003560 | S.RES ERJ3GEYJ 103 V (10 k) | B | 41.4/50 |
| R120 | 7030003560 | S.RES ERJ3GEYJ 103 V (10 k) | B | 49.4/65.3 |
| R121 | 7030003560 | S.RES ERJ3GEYJ 103 V (10 k) | B | 43.2/46.9 |
| R122 | 7030003560 | S.RES ERJ3GEYJ 103 V (10 k) | B | 39.3/56 |
| R123 | 7030003560 | S.RES ERJ3GEYJ 103 V (10 k) | B | 43.2/45.6 |
| R124 | 7030003680 | S.RES ERJ3GEYJ 104 V (100 k) | T | 51/49.3 |
| R125 | 7030003520 | S.RES ERJ3GEYJ 472 V (4.7 k) | T | 52.3/49.3 |
| R126 | 7030003560 | S.RES ERJ3GEYJ 103 V (10 k) | B | 52/61.4 |
| R127 | 7030003560 | S.RES ERJ3GEYJ 103 V (10 k) | B | 52/58.8 |
| R128 | 7030003560 | S.RES ERJ3GEYJ 103 V (10 k) | T | 53.6/45.7 |
| R129 | 7030003560 | S.RES ERJ3GEYJ 103 V (10 k) | T | 54.9/46.7 |
| R130 | 7030003560 | S.RES ERJ3GEYJ 103 V (10 k) | B | 56.4/50.5 |
| R131 | 7030003560 | S.RES ERJ3GEYJ 103 V (10 k) | B | 54.6/61.4 |
| R132 | 7030003560 | S.RES ERJ3GEYJ 103 V (10 k) | T | 56.2/49.3 |
| R133 | 7030003560 | S.RES ERJ3GEYJ 103 V (10 k) | T | 56.2/46.7 |
| R134 | 7030003200 | S.RES ERJ3GEYJ 100 V (10) | B | 57.2/58.8 |
| R135 | 7030003200 | S.RES ERJ3GEYJ 100 V (10) | B | 57.2/60.1 |
| R136 | 7030003200 | S.RES ERJ3GEYJ 100 V (10) | B | 70.1/50.5 |
| R137 | 7030004050 | S.RES ERJ3GEYJ 1R0 V (1) | B | 49.4/68 |
| R138 | 7030003560 | S.RES ERJ3GEYJ 103 V (10 k) | B | 49.4/69.3 |
| R139 | 7030003560 | S.RES ERJ3GEYJ 103 V (10 k) | B | 49.7/78 |
| R140 | 7410000990 | S.ARY EXB-V8V 470JV (47) | T | 47/82.7 |
| R141 | 7410000990 | S.ARY EXB-V8V 470JV (47) | T | 43.3/82.7 |
| R142 | 7410000990 | S.ARY EXB-V8V 470JV (47) | T | 54.4/82.7 |
| R143 | 7410000990 | S.ARY EXB-V8V 470JV (47) | T | 61.8/82.7 |
| R144 | 7410000990 | S.ARY EXB-V8V 470JV (47) | T | 50.7/82.7 |
| R145 | 7410000990 | S.ARY EXB-V8V 470JV (47) | T | 58.1/82.7 |
| R146 | 7030003280 | S.RES ERJ3GEYJ 470 V (47) | T | 70/81.8 |
| R147 | 7030003280 | S.RES ERJ3GEYJ 470 V (47) | T | 70/80.5 |
| R148 | 7410000990 | S.ARY EXB-V8V 470JV (47) | T | 65.5/82.7 |
| R149 | 7410000990 | S.ARY EXB-V8V 470JV (47) | T | 70/54.9 |
| R150 | 7410000990 | S.ARY EXB-V8V 470JV (47) | T | 70/58.6 |
| R151 | 7410000990 | S.ARY EXB-V8V 470JV (47) | T | 70/62.3 |
| R152 | 7410000990 | S.ARY EXB-V8V 470JV (47) | T | 70/66 |
| R153 | 7030003200 | S.RES ERJ3GEYJ 100 V (10) | T | 70/83.1 |
| R154 | 7410000990 | S.ARY EXB-V8V 470JV (47) | T | 70/69.7 |
| R155 | 7410000990 | S.ARY EXB-V8V 470JV (47) | T | 70/73.4 |
| R156 | 7410000990 | S.ARY EXB-V8V 470JV (47) | T | 70/78 |
| R157 | 7410000800 | S.ARY EXB-V8V 103JV (10 k) | T | 77.4/38.7 |
| R158 | 7030003560 | S.RES ERJ3GEYJ 103 V (10 k) | T | 77.4/36.2 |
| R159 | 7030003560 | S.RES ERJ3GEYJ 103 V (10 k) | T | 64.3/41.3 |
| R161 | 7030003250 | S.RES ERJ3GEYJ 270 V (27) | T | 9.1/64.6 |
| R162 | 7030003800 | S.RES ERJ3GEYJ 105 V (1 M) | T | 6.2/59.5 |
| R163 | 7030003320 | S.RES ERJ3GEYJ 101 V (100) | T | 12.5/73.7 |
| R164 | 7030003250 | S.RES ERJ3GEYJ 270 V (27) | B | 10.8/68.3 |
| R165 | 7030003860 | S.RES ERJ3GE JPW V | T | 4.3/76.8 |
| R166 | 7030003860 | S.RES ERJ3GE JPW V | T | 8.5/81.2 |
| R167 | 7030003860 | S.RES ERJ3GE JPW V | T | 14.9/78.1 |
| R170 | 7030003600 | S.RES ERJ3GEYJ 223 V (22 k) | B | 38.5/38.6 |
| R171 | 7030003600 | S.RES ERJ3GEYJ 223 V (22 k) | B | 35.3/75.2 |
| R172 | 7030003600 | S.RES ERJ3GEYJ 223 V (22 k) | B | 35.3/76.5 |
| R173 | 7030003600 | S.RES ERJ3GEYJ 223 V (22 k) | B | 39.4/78.2 |
| R174 | 7030003600 | S.RES ERJ3GEYJ 223 V (22 k) | B | 37.4/79 |

## [LOGIC UNIT]

| REF NO. | ORDER NO. | DESCRIPTION | M. | H/V LOCATION |
|---|---|---|---|---|
| R175 | 7030003600 | S.RES ERJ3GEYJ 223 V (22 k) | B | 37.4/80.3 |
| R176 | 7030003600 | S.RES ERJ3GEYJ 223 V (22 k) | B | 35.3/73.9 |
| R201 | 7030003560 | S.RES ERJ3GEYJ 103 V (10 k) | T | 114.5/85.1 |
| R202 | 7030003560 | S.RES ERJ3GEYJ 103 V (10 k) | T | 111.3/85.1 |
| R203 | 7030003560 | S.RES ERJ3GEYJ 103 V (10 k) | T | 118.4/86.4 |
| R204 | 7030003560 | S.RES ERJ3GEYJ 103 V (10 k) | T | 118.4/85.1 |
| R205 | 7030003560 | S.RES ERJ3GEYJ 103 V (10 k) | T | 114.5/82.5 |
| R206 | 7030003560 | S.RES ERJ3GEYJ 103 V (10 k) | T | 111.3/83.8 |
| R207 | 7030003560 | S.RES ERJ3GEYJ 103 V (10 k) | T | 118.4/83.8 |
| R208 | 7030003560 | S.RES ERJ3GEYJ 103 V (10 k) | T | 118.4/82.5 |
| R209 | 7030003560 | S.RES ERJ3GEYJ 103 V (10 k) | T | 114.5/83.8 |
| R212 | 7030003640 | S.RES ERJ3GEYJ 473 V (47 k) | T | 83.7/82 |
| R213 | 7030003640 | S.RES ERJ3GEYJ 473 V (47 k) | T | 83.7/83.3 |
| R218 | 7030003520 | S.RES ERJ3GEYJ 472 V (4.7 k) | T | 116.9/49 |
| R219 | 7030003520 | S.RES ERJ3GEYJ 472 V (4.7 k) | T | 83.7/79.4 |
| R220 | 7030003520 | S.RES ERJ3GEYJ 472 V (4.7 k) | B | 94.1/74.4 |
| R221 | 7030003560 | S.RES ERJ3GEYJ 103 V (10 k) | T | 83.7/73.7 |
| R225 | 7030003560 | S.RES ERJ3GEYJ 103 V (10 k) | B | 94.1/79.6 |
| R226 | 7030003560 | S.RES ERJ3GEYJ 103 V (10 k) | B | 94.1/80.9 |
| R227 | 7030003560 | S.RES ERJ3GEYJ 103 V (10 k) | T | 92/98.2 |
| R228 | 7030003560 | S.RES ERJ3GEYJ 103 V (10 k) | T | 92/95.1 |
| R229 | 7030003560 | S.RES ERJ3GEYJ 103 V (10 k) | T | 91.2/92 |
| R230 | 7030003560 | S.RES ERJ3GEYJ 103 V (10 k) | T | 93.3/95.1 |
| R231 | 7030003560 | S.RES ERJ3GEYJ 103 V (10 k) | T | 92.5/92.2 |
| R232 | 7030003560 | S.RES ERJ3GEYJ 103 V (10 k) | B | 93.4/83.2 |
| R233 | 7030003560 | S.RES ERJ3GEYJ 103 V (10 k) | T | 93.3/98.2 |
| R234 | 7030003560 | S.RES ERJ3GEYJ 103 V (10 k) | T | 93.8/92.2 |
| R235 | 7030003560 | S.RES ERJ3GEYJ 103 V (10 k) | T | 94.6/95.1 |
| R236 | 7030003560 | S.RES ERJ3GEYJ 103 V (10 k) | T | 94.6/98.2 |
| R237 | 7030003560 | S.RES ERJ3GEYJ 103 V (10 k) | B | 94.7/83.2 |
| R238 | 7030003560 | S.RES ERJ3GEYJ 103 V (10 k) | T | 95.1/92.2 |
| R239 | 7030003560 | S.RES ERJ3GEYJ 103 V (10 k) | T | 95.9/95.1 |
| R240 | 7030003560 | S.RES ERJ3GEYJ 103 V (10 k) | T | 95.9/98.2 |
| R241 | 7030003560 | S.RES ERJ3GEYJ 103 V (10 k) | B | 97/89.4 |
| R242 | 7030003560 | S.RES ERJ3GEYJ 103 V (10 k) | T | 96.6/92 |
| R243 | 7030003560 | S.RES ERJ3GEYJ 103 V (10 k) | B | 96/83.2 |
| R244 | 7030003560 | S.RES ERJ3GEYJ 103 V (10 k) | T | 96.6/64.7 |
| R245 | 7030003560 | S.RES ERJ3GEYJ 103 V (10 k) | T | 90.1/64.7 |
| R246 | 7030003560 | S.RES ERJ3GEYJ 103 V (10 k) | T | 88.8/61.6 |
| R247 | 7030003560 | S.RES ERJ3GEYJ 103 V (10 k) | B | 96.7/74.4 |
| R248 | 7030003560 | S.RES ERJ3GEYJ 103 V (10 k) | T | 91.4/64.7 |
| R249 | 7030003560 | S.RES ERJ3GEYJ 103 V (10 k) | T | 86.2/64.7 |
| R250 | 7030003560 | S.RES ERJ3GEYJ 103 V (10 k) | T | 87.5/64.7 |
| R251 | 7030003560 | S.RES ERJ3GEYJ 103 V (10 k) | T | 90.1/61.6 |
| R252 | 7030003560 | S.RES ERJ3GEYJ 103 V (10 k) | T | 87.5/61.6 |
| R253 | 7030003560 | S.RES ERJ3GEYJ 103 V (10 k) | T | 83.7/75 |
| R254 | 7030003560 | S.RES ERJ3GEYJ 103 V (10 k) | T | 88.8/64.7 |
| R255 | 7030003560 | S.RES ERJ3GEYJ 103 V (10 k) | T | 86.2/61.6 |
| R256 | 7030003560 | S.RES ERJ3GEYJ 103 V (10 k) | B | 96.7/77 |
| R257 | 7030003560 | S.RES ERJ3GEYJ 103 V (10 k) | T | 92.7/64.7 |
| R258 | 7030003560 | S.RES ERJ3GEYJ 103 V (10 k) | B | 96.7/78.3 |
| R259 | 7030003560 | S.RES ERJ3GEYJ 103 V (10 k) | T | 92.7/61.6 |
| R260 | 7030003560 | S.RES ERJ3GEYJ 103 V (10 k) | B | 96.7/79.6 |
| R261 | 7030003560 | S.RES ERJ3GEYJ 103 V (10 k) | T | 94/61.6 |
| R262 | 7030003560 | S.RES ERJ3GEYJ 103 V (10 k) | B | 96.7/80.9 |
| R263 | 7030003560 | S.RES ERJ3GEYJ 103 V (10 k) | B | 94/66.6 |
| R264 | 7030003560 | S.RES ERJ3GEYJ 103 V (10 k) | B | 98/72.6 |
| R265 | 7030003560 | S.RES ERJ3GEYJ 103 V (10 k) | T | 92.7/59 |
| R266 | 7030003560 | S.RES ERJ3GEYJ 103 V (10 k) | T | 94/59 |
| R267 | 7030003560 | S.RES ERJ3GEYJ 103 V (10 k) | T | 95.3/64.7 |
| R268 | 7030003560 | S.RES ERJ3GEYJ 103 V (10 k) | B | 91.4/66.6 |
| R269 | 7030003560 | S.RES ERJ3GEYJ 103 V (10 k) | T | 94/64.7 |
| R270 | 7030003560 | S.RES ERJ3GEYJ 103 V (10 k) | T | 91.4/61.6 |
| R271 | 7030003560 | S.RES ERJ3GEYJ 103 V (10 k) | T | 91.4/59 |
| R272 | 7030003560 | S.RES ERJ3GEYJ 103 V (10 k) | B | 114.7/71.1 |
| R273 | 7030003560 | S.RES ERJ3GEYJ 103 V (10 k) | T | 114/68.2 |
| R274 | 7030003560 | S.RES ERJ3GEYJ 103 V (10 k) | B | 99.9/79.7 |
| R275 | 7030003560 | S.RES ERJ3GEYJ 103 V (10 k) | T | 111/69.5 |
| R276 | 7030003560 | S.RES ERJ3GEYJ 103 V (10 k) | T | 108.7/64.8 |
| R277 | 7030003560 | S.RES ERJ3GEYJ 103 V (10 k) | T | 114/66.9 |
| R278 | 7030003560 | S.RES ERJ3GEYJ 103 V (10 k) | T | 114/65.6 |
| R279 | 7030003560 | S.RES ERJ3GEYJ 103 V (10 k) | B | 99.9/81 |
| R280 | 7030003560 | S.RES ERJ3GEYJ 103 V (10 k) | T | 114/69.5 |
| R281 | 7030003560 | S.RES ERJ3GEYJ 103 V (10 k) | B | 100.6/75.2 |
| R282 | 7030003560 | S.RES ERJ3GEYJ 103 V (10 k) | B | 99.3/75.2 |
| R283 | 7030003560 | S.RES ERJ3GEYJ 103 V (10 k) | B | 105.6/65.2 |
| R284 | 7030003560 | S.RES ERJ3GEYJ 103 V (10 k) | B | 105.6/66.5 |
| R285 | 7030003560 | S.RES ERJ3GEYJ 103 V (10 k) | B | 99.9/78.4 |
| R286 | 7030003560 | S.RES ERJ3GEYJ 103 V (10 k) | T | 114/64.3 |
| R287 | 7030003560 | S.RES ERJ3GEYJ 103 V (10 k) | T | 103.5/65.6 |
| R288 | 7030003560 | S.RES ERJ3GEYJ 103 V (10 k) | T | 108.7/63.4 |
| R289 | 7030003560 | S.RES ERJ3GEYJ 103 V (10 k) | T | 100.9/65.5 |
| R290 | 7030003560 | S.RES ERJ3GEYJ 103 V (10 k) | B | 99.9/77 |
| R291 | 7030003560 | S.RES ERJ3GEYJ 103 V (10 k) | T | 106.1/65.5 |
| R292 | 7030003560 | S.RES ERJ3GEYJ 103 V (10 k) | B | 94.1/75.7 |
| R293 | 7030003560 | S.RES ERJ3GEYJ 103 V (10 k) | B | 94.1/77 |
| R294 | 7030003560 | S.RES ERJ3GEYJ 103 V (10 k) | B | 94.1/78.3 |
| R295 | 7030003640 | S.RES ERJ3GEYJ 473 V (47 k) | B | 96.7/75.7 |
| R296 | 7030003560 | S.RES ERJ3GEYJ 103 V (10 k) | T | 111.3/87.7 |
| R297 | 7030003560 | S.RES ERJ3GEYJ 103 V (10 k) | T | 111.3/91.6 |
| R298 | 7030003560 | S.RES ERJ3GEYJ 103 V (10 k) | T | 118.4/91.6 |
| R299 | 7030003560 | S.RES ERJ3GEYJ 103 V (10 k) | T | 111.3/90.3 |

M.=Mounted side (T: Mounted on the Top side, B: Mounted on the Bottom side)
S.=Surface mount

## [LOGIC UNIT]

| REF NO. | ORDER NO. | DESCRIPTION | M. | H/V LOCATION |
|---|---|---|---|---|
| R300 | 7030003560 | S.RES ERJ3GEYJ 103 V (10 k) | T | 114.5/90.3 |
| R301 | 7030003560 | S.RES ERJ3GEYJ 103 V (10 k) | T | 118.4/90.3 |
| R302 | 7030003560 | S.RES ERJ3GEYJ 103 V (10 k) | T | 114.5/91.6 |
| R303 | 7030003560 | S.RES ERJ3GEYJ 103 V (10 k) | T | 118.4/89 |
| R304 | 7030003560 | S.RES ERJ3GEYJ 103 V (10 k) | T | 114.5/89 |
| R305 | 7030003560 | S.RES ERJ3GEYJ 103 V (10 k) | T | 111.3/89 |
| R306 | 7030003560 | S.RES ERJ3GEYJ 103 V (10 k) | T | 111.3/86.4 |
| R307 | 7030003560 | S.RES ERJ3GEYJ 103 V (10 k) | T | 114.5/86.4 |
| R308 | 7030003560 | S.RES ERJ3GEYJ 103 V (10 k) | T | 118.4/87.7 |
| R309 | 7030003560 | S.RES ERJ3GEYJ 103 V (10 k) | T | 114.5/87.7 |
| R310 | 7030003560 | S.RES ERJ3GEYJ 103 V (10 k) | T | 111/68.2 |
| R311 | 7030003560 | S.RES ERJ3GEYJ 103 V (10 k) | B | 116.1/71.1 |
| R313 | 7030003410 | S.RES ERJ3GEYJ 561 V (560) | T | 209.8/36.7 |
| R314 | 7030003340 | S.RES ERJ3GEYJ 151 V (150) | B | 216.8/32.5 |
| R315 | 7030003340 | S.RES ERJ3GEYJ 151 V (150) | B | 218.1/32.5 |
| R316 | 7030003340 | S.RES ERJ3GEYJ 151 V (150) | B | 216.8/29.5 |
| R317 | 7030003340 | S.RES ERJ3GEYJ 151 V (150) | B | 218.1/29.5 |
| R318 | 7030003340 | S.RES ERJ3GEYJ 151 V (150) | B | 216.8/26.5 |
| R319 | 7030003340 | S.RES ERJ3GEYJ 151 V (150) | B | 218.1/26.5 |
| R320 | 7030003240 | S.RES ERJ3GEYJ 220 V (22) | T | 203.9/17.8 |
| R321 | 7030003240 | S.RES ERJ3GEYJ 220 V (22) | T | 203.9/20.7 |
| R322 | 7030003250 | S.RES ERJ3GEYJ 270 V (27) | B | 213.9/7.4 |
| R323 | 7030003250 | S.RES ERJ3GEYJ 270 V (27) | B | 215.9/3.3 |
| R324 | 7030003580 | S.RES ERJ3GEYJ 153 V (15 k) | B | 213.9/6.1 |
| R325 | 7030003580 | S.RES ERJ3GEYJ 153 V (15 k) | B | 215.9/4.6 |
| R326 | 7030003250 | S.RES ERJ3GEYJ 270 V (27) | B | 227.4/4.9 |
| R327 | 7030003250 | S.RES ERJ3GEYJ 270 V (27) | B | 230/4.9 |
| R328 | 7030003580 | S.RES ERJ3GEYJ 153 V (15 k) | B | 228.1/3.1 |
| R329 | 7030003580 | S.RES ERJ3GEYJ 153 V (15 k) | B | 230.7/3.1 |
| R330 | 7030003560 | S.RES ERJ3GEYJ 103 V (10 k) | B | 222.6/38.8 |
| R331 | 7030003560 | S.RES ERJ3GEYJ 103 V (10 k) | B | 223.9/38.8 |
| R332 | 7030003640 | S.RES ERJ3GEYJ 473 V (47 k) | B | 104.6/25.8 |
| R333 | 7030003640 | S.RES ERJ3GEYJ 473 V (47 k) | B | 113.9/19.1 |
| R334 | 7030003640 | S.RES ERJ3GEYJ 473 V (47 k) | B | 110.7/19.5 |
| R335 | 7030003280 | S.RES ERJ3GEYJ 470 V (47) | B | 109.8/26.4 |
| R336 | 7030003640 | S.RES ERJ3GEYJ 473 V (47 k) | B | 115.5/25.8 |
| R337 | 7030003640 | S.RES ERJ3GEYJ 473 V (47 k) | B | 125.1/23.6 |
| R338 | 7030003640 | S.RES ERJ3GEYJ 473 V (47 k) | B | 125.2/20.6 |
| R339 | 7030003280 | S.RES ERJ3GEYJ 470 V (47) | B | 120.1/27.7 |
| R340 | 7030003280 | S.RES ERJ3GEYJ 470 V (47) | B | 130.8/38.1 |
| R341 | 7030003640 | S.RES ERJ3GEYJ 473 V (47 k) | B | 135.7/33.5 |
| R342 | 7030003280 | S.RES ERJ3GEYJ 470 V (47) | B | 121.7/36.9 |
| R343 | 7030003640 | S.RES ERJ3GEYJ 473 V (47 k) | B | 119.5/30 |
| R344 | 7030003520 | S.RES ERJ3GEYJ 472 V (4.7 k) | B | 129.1/29.1 |
| R345 | 7030003520 | S.RES ERJ3GEYJ 472 V (4.7 k) | B | 116.9/30 |
| R350 | 7030003860 | S.RES ERJ3GE JPW V | T | 119.5/49 |
| R351 | 7030003860 | S.RES ERJ3GE JPW V | B | 100.6/83.2 |
| R353 | 7030003860 | S.RES ERJ3GE JPW V | B | 187.5/12.3 |
| R355 | 7030003860 | S.RES ERJ3GE JPW V | B | 187.5/13.6 |
| R356 | 7030003860 | S.RES ERJ3GE JPW V | B | 185.3/9.9 |
| R361 | 7030003320 | S.RES ERJ3GEYJ 101 V (100) | T | 193.5/25.6 |
| R401 | 7030003320 | S.RES ERJ3GEYJ 101 V (100) | B | 39.9/44.9 |
| R403 | 7030003560 | S.RES ERJ3GEYJ 103 V (10 k) | B | 16.5/35.6 |
| R404 | 7030003560 | S.RES ERJ3GEYJ 103 V (10 k) | B | 22.8/35.6 |
| R405 | 7030003560 | S.RES ERJ3GEYJ 103 V (10 k) | B | 7.9/40.8 |
| R406 | 7030003560 | S.RES ERJ3GEYJ 103 V (10 k) | T | 24.3/46.5 |
| R407 | 7030003560 | S.RES ERJ3GEYJ 103 V (10 k) | T | 22.5/47.2 |
| R408 | 7030003560 | S.RES ERJ3GEYJ 103 V (10 k) | T | 28.1/51.8 |
| R409 | 7030003560 | S.RES ERJ3GEYJ 103 V (10 k) | T | 22.9/57 |
| R410 | 7030003560 | S.RES ERJ3GEYJ 103 V (10 k) | T | 20.3/57 |
| R411 | 7030003560 | S.RES ERJ3GEYJ 103 V (10 k) | T | 24.2/57 |
| R412 | 7030003560 | S.RES ERJ3GEYJ 103 V (10 k) | T | 25.5/57 |
| R413 | 7030003560 | S.RES ERJ3GEYJ 103 V (10 k) | T | 26.8/57 |
| R414 | 7030003560 | S.RES ERJ3GEYJ 103 V (10 k) | T | 21.6/57 |
| R415 | 7030003560 | S.RES ERJ3GEYJ 103 V (10 k) | B | 25.6/26.2 |
| R416 | 7030003560 | S.RES ERJ3GEYJ 103 V (10 k) | B | 24.3/26.2 |
| R417 | 7030003560 | S.RES ERJ3GEYJ 103 V (10 k) | B | 23/26.2 |
| R418 | 7030003320 | S.RES ERJ3GEYJ 101 V (100) | B | 36.1/82.5 |
| R419 | 7030003440 | S.RES ERJ3GEYJ 102 V (1 k) | B | 10.4/83.3 |
| R420 | 7030003580 | S.RES ERJ3GEYJ 153 V (15 k) | B | 11/81.5 |
| R421 | 7030003470 | S.RES ERJ3GEYJ 182 V (1.8 k) | B | 12.3/76.4 |
| R422 | 7030003250 | S.RES ERJ3GEYJ 270 V (27) | B | 11.5/74.2 |
| R423 | 7030003560 | S.RES ERJ3GEYJ 103 V (10 k) | B | 14.6/90.2 |
| R424 | 7030003560 | S.RES ERJ3GEYJ 103 V (10 k) | B | 11.5/85.7 |
| R425 | 7030003380 | S.RES ERJ3GEYJ 331 V (330) | T | 9.3/96.4 |
| R426 | 7030003380 | S.RES ERJ3GEYJ 331 V (330) | T | 9.3/94.9 |
| R427 | 7030003380 | S.RES ERJ3GEYJ 331 V (330) | T | 9.3/93.1 |
| R428 | 7030003320 | S.RES ERJ3GEYJ 101 V (100) | B | 147.4/21.2 |
| R429 | 7030003320 | S.RES ERJ3GEYJ 101 V (100) | B | 148.7/21.2 |
| R430 | 7030003320 | S.RES ERJ3GEYJ 101 V (100) | B | 151.3/21.2 |
| R431 | 7030003320 | S.RES ERJ3GEYJ 101 V (100) | B | 150/21.2 |
| R432 | 7030003320 | S.RES ERJ3GEYJ 101 V (100) | B | 154.3/15.2 |
| R433 | 7030003320 | S.RES ERJ3GEYJ 101 V (100) | B | 155.6/15.2 |
| R434 | 7030003320 | S.RES ERJ3GEYJ 101 V (100) | B | 155.6/18.4 |
| R435 | 7030003320 | S.RES ERJ3GEYJ 101 V (100) | B | 154.3/18.4 |
| R436 | 7030003340 | S.RES ERJ3GEYJ 151 V (150) | B | 156.5/6.7 |
| R437 | 7030003340 | S.RES ERJ3GEYJ 151 V (150) | B | 158.5/6.7 |
| R438 | 7030003340 | S.RES ERJ3GEYJ 151 V (150) | B | 162.5/6.7 |
| R439 | 7030003340 | S.RES ERJ3GEYJ 151 V (150) | B | 164.5/6.7 |
| R440 | 7030003340 | S.RES ERJ3GEYJ 151 V (150) | B | 156.5/4.1 |
| R441 | 7030003340 | S.RES ERJ3GEYJ 151 V (150) | B | 158.5/4.1 |
| R442 | 7030003340 | S.RES ERJ3GEYJ 151 V (150) | B | 164.5/4.1 |

## [LOGIC UNIT]

| REF NO. | ORDER NO. | DESCRIPTION | M. | H/V LOCATION |
|---|---|---|---|---|
| R443 | 7030003340 | S.RES ERJ3GEYJ 151 V (150) | B | 162.5/4.1 |
| R450 | 7030003860 | S.RES ERJ3GE JPW V | T | 36.8/35.4 |
| R601 | 7030003620 | S.RES ERJ3GEYJ 333 V (33 k) | B | 175/55.4 |
| R602 | 7030003590 | S.RES ERJ3GEYJ 183 V (18 k) | B | 171.3/53.1 |
| R603 | 7030003540 | S.RES ERJ3GEYJ 682 V (6.8 k) | B | 173.1/55.2 |
| R604 | 7030003640 | S.RES ERJ3GEYJ 473 V (47 k) | B | 171.3/55.7 |
| R605 | 7030003680 | S.RES ERJ3GEYJ 104 V (100 k) | B | 167.3/55 |
| R606 | 7030003680 | S.RES ERJ3GEYJ 104 V (100 k) | B | 102.8/31.6 |
| R607 | 7030003350 | S.RES ERJ3GEYJ 181 V (180) | B | 87.7/14.2 |
| R608 | 7030003520 | S.RES ERJ3GEYJ 472 V (4.7 k) | B | 90.5/14.2 |
| R609 | 7030003440 | S.RES ERJ3GEYJ 102 V (1 k) | T | 80.8/23.6 |
| R610 | 7030003440 | S.RES ERJ3GEYJ 102 V (1 k) | T | 80.8/24.9 |
| R611 | 7030003440 | S.RES ERJ3GEYJ 102 V (1 k) | T | 80.8/26.2 |
| R612 | 7030003440 | S.RES ERJ3GEYJ 102 V (1 k) | T | 80.1/27.5 |
| R613 | 7030003440 | S.RES ERJ3GEYJ 102 V (1 k) | T | 83.4/27.9 |
| R614 | 7030003440 | S.RES ERJ3GEYJ 102 V (1 k) | T | 83.4/29.2 |
| R615 | 7030003440 | S.RES ERJ3GEYJ 102 V (1 k) | T | 83.4/30.5 |
| R616 | 7030003440 | S.RES ERJ3GEYJ 102 V (1 k) | T | 83.4/31.8 |
| R617 | 7030003800 | S.RES ERJ3GEYJ 105 V (1 M) | T | 86.5/31.8 |
| R618 | 7030003800 | S.RES ERJ3GEYJ 105 V (1 M) | T | 86.5/30.5 |
| R619 | 7030003800 | S.RES ERJ3GEYJ 105 V (1 M) | T | 86.5/29.2 |
| R620 | 7030003800 | S.RES ERJ3GEYJ 105 V (1 M) | T | 86.5/27.9 |
| R621 | 7030003800 | S.RES ERJ3GEYJ 105 V (1 M) | T | 84.1/26.6 |
| R622 | 7030003800 | S.RES ERJ3GEYJ 105 V (1 M) | T | 84.1/25.3 |
| R623 | 7030003800 | S.RES ERJ3GEYJ 105 V (1 M) | T | 84.3/23.6 |
| R624 | 7030003800 | S.RES ERJ3GEYJ 105 V (1 M) | T | 84.3/22.3 |
| R625 | 7030003640 | S.RES ERJ3GEYJ 473 V (47 k) | B | 68.6/27.3 |
| R626 | 7030003600 | S.RES ERJ3GEYJ 223 V (22 k) | B | 68.6/28.6 |
| R627 | 7030003640 | S.RES ERJ3GEYJ 473 V (47 k) | B | 66.3/36.4 |
| R628 | 7030003640 | S.RES ERJ3GEYJ 473 V (47 k) | B | 66.3/35.1 |
| R629 | 7030003640 | S.RES ERJ3GEYJ 473 V (47 k) | B | 71.2/34.9 |
| R630 | 7030003520 | S.RES ERJ3GEYJ 472 V (4.7 k) | B | 68.6/32.5 |
| R631 | 7030003520 | S.RES ERJ3GEYJ 472 V (4.7 k) | T | 67.4/27 |
| R632 | 7030003520 | S.RES ERJ3GEYJ 472 V (4.7 k) | T | 67.4/30.9 |
| R633 | 7030003520 | S.RES ERJ3GEYJ 472 V (4.7 k) | T | 67.4/28.3 |
| R634 | 7030003520 | S.RES ERJ3GEYJ 472 V (4.7 k) | B | 66.3/33.8 |
| R635 | 7030003520 | S.RES ERJ3GEYJ 472 V (4.7 k) | T | 67.4/29.6 |
| R636 | 7030003640 | S.RES ERJ3GEYJ 473 V (47 k) | B | 58.1/19.5 |
| R637 | 7030003640 | S.RES ERJ3GEYJ 473 V (47 k) | B | 61.8/19.5 |
| R639 | 7030003640 | S.RES ERJ3GEYJ 473 V (47 k) | T | 99.1/19 |
| R640 | 7030003640 | S.RES ERJ3GEYJ 473 V (47 k) | T | 97.8/19 |
| R641 | 7030003640 | S.RES ERJ3GEYJ 473 V (47 k) | T | 96.5/19 |
| R642 | 7030003640 | S.RES ERJ3GEYJ 473 V (47 k) | T | 95.2/19 |
| R643 | 7030003600 | S.RES ERJ3GEYJ 223 V (22 k) | B | 80.9/46.3 |
| R644 | 7030003560 | S.RES ERJ3GEYJ 103 V (10 k) | B | 82.2/46.3 |
| R645 | 7030003520 | S.RES ERJ3GEYJ 472 V (4.7 k) | T | 93.1/40.9 |
| R646 | 7030003720 | S.RES ERJ3GEYJ 224 V (220 k) | B | 101.8/41.5 |
| R647 | 7030003720 | S.RES ERJ3GEYJ 224 V (220 k) | B | 102.8/44.1 |
| R648 | 7030003720 | S.RES ERJ3GEYJ 224 V (220 k) | B | 103.8/41.5 |
| R649 | 7030003720 | S.RES ERJ3GEYJ 224 V (220 k) | B | 104.8/44.1 |
| R650 | 7030003720 | S.RES ERJ3GEYJ 224 V (220 k) | B | 105.8/41.5 |
| R651 | 7030003720 | S.RES ERJ3GEYJ 224 V (220 k) | B | 106.8/44.1 |
| R652 | 7030003720 | S.RES ERJ3GEYJ 224 V (220 k) | B | 107.8/41.5 |
| R653 | 7030003720 | S.RES ERJ3GEYJ 224 V (220 k) | B | 108.7/44.1 |
| R654 | 7030003520 | S.RES ERJ3GEYJ 472 V (4.7 k) | B | 102.8/39.2 |
| R655 | 7030003520 | S.RES ERJ3GEYJ 472 V (4.7 k) | B | 102.8/37.7 |
| R656 | 7030003520 | S.RES ERJ3GEYJ 472 V (4.7 k) | T | 144.4/59.9 |
| R657 | 7030003720 | S.RES ERJ3GEYJ 224 V (220 k) | B | 68.6/26 |
| R658 | 7030003640 | S.RES ERJ3GEYJ 473 V (47 k) | B | 84.2/44.2 |
| R659 | 7030003640 | S.RES ERJ3GEYJ 473 V (47 k) | B | 84.2/45.5 |
| R660 | 7030003640 | S.RES ERJ3GEYJ 473 V (47 k) | B | 102.8/29.5 |
| R661 | 7030003640 | S.RES ERJ3GEYJ 473 V (47 k) | B | 69.4/16.4 |
| R662 | 7030003640 | S.RES ERJ3GEYJ 473 V (47 k) | B | 89.2/14.2 |
| R663 | 7030003640 | S.RES ERJ3GEYJ 473 V (47 k) | B | 71.2/15.9 |
| R664 | 7030003640 | S.RES ERJ3GEYJ 473 V (47 k) | B | 71.2/17.2 |
| R665 | 7030003560 | S.RES ERJ3GEYJ 103 V (10 k) | B | 93.1/14.2 |
| R666 | 7030003560 | S.RES ERJ3GEYJ 103 V (10 k) | B | 78.3/16.5 |
| R667 | 7030003560 | S.RES ERJ3GEYJ 103 V (10 k) | B | 77/16 |
| R668 | 7030003640 | S.RES ERJ3GEYJ 473 V (47 k) | B | 84.9/16.8 |
| R669 | 7030003640 | S.RES ERJ3GEYJ 473 V (47 k) | B | 71.2/14.6 |
| R670 | 7030003640 | S.RES ERJ3GEYJ 473 V (47 k) | T | 94.4/43.5 |
| R671 | 7030003640 | S.RES ERJ3GEYJ 473 V (47 k) | T | 95.7/43.5 |
| R672 | 7030003640 | S.RES ERJ3GEYJ 473 V (47 k) | B | 75.7/16.8 |
| R673 | 7030003640 | S.RES ERJ3GEYJ 473 V (47 k) | B | 74.4/16.8 |
| R674 | 7030003640 | S.RES ERJ3GEYJ 473 V (47 k) | T | 91.3/36.8 |
| R675 | 7030003640 | S.RES ERJ3GEYJ 473 V (47 k) | T | 89.1/31.8 |
| R676 | 7030003640 | S.RES ERJ3GEYJ 473 V (47 k) | B | 94.4/14.2 |
| R677 | 7030003520 | S.RES ERJ3GEYJ 472 V (4.7 k) | T | 146.1/65.1 |
| R678 | 7030003720 | S.RES ERJ3GEYJ 224 V (220 k) | B | 68.6/22.1 |
| R679 | 7030003640 | S.RES ERJ3GEYJ 473 V (47 k) | B | 91.8/14.2 |
| R680 | 7030003520 | S.RES ERJ3GEYJ 472 V (4.7 k) | T | 144.6/65.1 |
| R681 | 7030003520 | S.RES ERJ3GEYJ 472 V (4.7 k) | T | 147.5/65.1 |
| R682 | 7030003520 | S.RES ERJ3GEYJ 472 V (4.7 k) | B | 152.7/60.8 |
| R683 | 7030003720 | S.RES ERJ3GEYJ 224 V (220 k) | B | 68.6/23.4 |
| R684 | 7030003640 | S.RES ERJ3GEYJ 473 V (47 k) | B | 80.2/16.2 |
| R685 | 7030003520 | S.RES ERJ3GEYJ 472 V (4.7 k) | B | 152.7/62.1 |
| R686 | 7030003520 | S.RES ERJ3GEYJ 472 V (4.7 k) | B | 152.7/59.5 |
| R687 | 7030003520 | S.RES ERJ3GEYJ 472 V (4.7 k) | B | 152.1/53.6 |
| R688 | 7030003720 | S.RES ERJ3GEYJ 224 V (220 k) | B | 68.6/24.7 |
| R689 | 7030003520 | S.RES ERJ3GEYJ 472 V (4.7 k) | B | 153/56.2 |
| R690 | 7030003520 | S.RES ERJ3GEYJ 472 V (4.7 k) | B | 153/54.9 |
| R691 | 7030003640 | S.RES ERJ3GEYJ 473 V (47 k) | B | 66/31.9 |

M.=Mounted side (T: Mounted on the Top side, B: Mounted on the Bottom side)
S.=Surface mount

## [LOGIC UNIT]

| REF NO. | ORDER NO. | DESCRIPTION | M. | H/V LOCATION |
|---|---|---|---|---|
| R701 | 7030003860 | S.RES ERJ3GE JPW V | T | 93.1/43.5 |
| R801 | 7030003560 | S.RES ERJ3GEYJ 103 V (10 k) | T | 158.2/72.8 |
| R802 | 7030006210 | S.RES ERJ12YJ4R7U (4.7) | T | 162.3/71.2 |
| R803 | 7030003440 | S.RES ERJ3GEYJ 102 V (1 k) | T | 159.5/72.8 |
| R804 | 7030006210 | S.RES ERJ12YJ4R7U (4.7) | T | 168.9/71.2 |
| R805 | 7030003440 | S.RES ERJ3GEYJ 102 V (1 k) | T | 166.1/72.8 |
| R806 | 7030003560 | S.RES ERJ3GEYJ 103 V (10 k) | T | 164.8/72.8 |
| R807 | 7030006210 | S.RES ERJ12YJ4R7U (4.7) | T | 175.5/71.2 |
| R808 | 7030003440 | S.RES ERJ3GEYJ 102 V (1 k) | T | 173/72.8 |
| R809 | 7030003560 | S.RES ERJ3GEYJ 103 V (10 k) | T | 171.6/72.8 |
| R810 | 7030003320 | S.RES ERJ3GEYJ 101 V (100) | B | 154.9/29.9 |
| R811 | 7030003320 | S.RES ERJ3GEYJ 101 V (100) | B | 154.9/27.5 |
| R812 | 7030010440 | S.RES ERJ1TYJ 680U (68) | B | 133/111.2 |
| R813 | 7030003560 | S.RES ERJ3GEYJ 103 V (10 k) | B | 192.6/10 |
| R814 | 7030003440 | S.RES ERJ3GEYJ 102 V (1 k) | T | 105.6/116.6 |
| R816 | 7030003560 | S.RES ERJ3GEYJ 103 V (10 k) | T | 158.9/74.7 |
| R817 | 7030003560 | S.RES ERJ3GEYJ 103 V (10 k) | T | 161.5/74.7 |
| R818 | 7030000140 | S.RES MCR10EZHJ 10 (100) | T | 155.6/78.2 |
| R819 | 7030007190 | S.RES ERJ12YJ220U (22) | T | 135.4/111 |
| R821 | 7030003370 | S.RES ERJ3GEYJ 271 V (270) | B | 15.3/100 |
| R822 | 7030009720 | S.RES ERJ12YJ102U (1 k) | T | 19.9/103.2 |
| R823 | 7030003810 | S.RES ERJ3GEYJ 125 V (1.2 M) | B | 16.8/109.5 |
| R824 | 7030003810 | S.RES ERJ3GEYJ 125 V (1.2 M) | B | 13.5/107.1 |
| R825 | 7030008170 | S.RES ERJ12YJ1R0U (1) | B | 37/112.2 |
| R826 | 7030003610 | S.RES ERJ3GEYJ 273 V (27 k) | B | 16.8/110.8 |
| R827 | 7030003610 | S.RES ERJ3GEYJ 273 V (27 k) | B | 13.5/109.9 |
| R828 | 7030003560 | S.RES ERJ3GEYJ 103 V (10 k) | B | 25.4/101.5 |
| R829 | 7030000340 | S.RES MCR10EZHJ 470 (471) | B | 20.6/104.5 |
| R830 | 7030003600 | S.RES ERJ3GEYJ 223 V (22 k) | B | 18.5/100 |
| R832 | 7030003600 | S.RES ERJ3GEYJ 223 V (22 k) | B | 18.5/98.7 |
| R833 | 7030003560 | S.RES ERJ3GEYJ 103 V (10 k) | B | 18.5/97.4 |
| R850 | 7030003860 | S.RES ERJ3GE JPW V | B | 182.4/50.2 |
| R851 | 7030003680 | S.RES ERJ3GEYJ 104 V (100 k) | B | 187.1/61.9 |
| R852 | 7030003680 | S.RES ERJ3GEYJ 104 V (100 k) | B | 185/61.9 |
| R853 | 7030003770 | S.RES ERJ3GEYJ 564 V (560 k) | B | 183.7/61.9 |
| R854 | 7030003770 | S.RES ERJ3GEYJ 564 V (560 k) | B | 188.4/61.9 |
| R855 | 7030003520 | S.RES ERJ3GEYJ 472 V (4.7 k) | B | 191.5/61.9 |
| R856 | 7030003520 | S.RES ERJ3GEYJ 472 V (4.7 k) | B | 180.6/61.9 |
| R857 | 7030003560 | S.RES ERJ3GEYJ 103 V (10 k) | B | 144.7/14.2 |
| R858 | 7030003460 | S.RES ERJ3GEYJ 152 V (1.5 k) | B | 144.7/12.9 |
| R859 | 7030003470 | S.RES ERJ3GEYJ 182 V (1.8 k) | B | 142.1/12.9 |
| R860 | 7030003500 | S.RES ERJ3GEYJ 332 V (3.3 k) | B | 144.7/15.5 |
| R861 | 7030003480 | S.RES ERJ3GEYJ 222 V (2.2 k) | B | 141.4/14.9 |
| R862 | 7030003380 | S.RES ERJ3GEYJ 331 V (330) | B | 147.7/3.8 |
| R863 | 7030003560 | S.RES ERJ3GEYJ 103 V (10 k) | B | 134.5/21.1 |
| R864 | 7030003460 | S.RES ERJ3GEYJ 152 V (1.5 k) | B | 134.5/19.8 |
| R865 | 7030003470 | S.RES ERJ3GEYJ 182 V (1.8 k) | B | 134.5/18.5 |
| R866 | 7030003500 | S.RES ERJ3GEYJ 332 V (3.3 k) | B | 131.7/17.2 |
| R867 | 7030003480 | S.RES ERJ3GEYJ 222 V (2.2 k) | B | 131.7/18.5 |
| R868 | 7030003380 | S.RES ERJ3GEYJ 331 V (330) | B | 134.1/3.8 |
| R869 | 7030003560 | S.RES ERJ3GEYJ 103 V (10 k) | B | 114.1/30 |
| R870 | 7030003560 | S.RES ERJ3GEYJ 103 V (10 k) | B | 144.7/7.2 |
| R871 | 7030003460 | S.RES ERJ3GEYJ 152 V (1.5 k) | B | 143.4/7.2 |
| R872 | 7030003470 | S.RES ERJ3GEYJ 182 V (1.8 k) | B | 142.1/7.2 |
| R873 | 7030003500 | S.RES ERJ3GEYJ 332 V (3.3 k) | B | 138.2/7.2 |
| R874 | 7030003480 | S.RES ERJ3GEYJ 222 V (2.2 k) | B | 139.5/7.2 |
| R875 | 7030003380 | S.RES ERJ3GEYJ 331 V (330) | B | 140.9/3.8 |
| R876 | 7030003410 | S.RES ERJ3GEYJ 561 V (560) | B | 120.5/14.9 |
| R877 | 7030003700 | S.RES ERJ3GEYJ 154 V (150 k) | B | 120.5/13.6 |
| R878 | 7030003520 | S.RES ERJ3GEYJ 472 V (4.7 k) | B | 120.5/12.3 |
| R879 | 7030003550 | S.RES ERJ3GEYJ 822 V (8.2 k) | B | 117.9/4.2 |
| R880 | 7030003690 | S.RES ERJ3GEYJ 124 V (120 k) | B | 119.7/5 |
| R881 | 7030003520 | S.RES ERJ3GEYJ 472 V (4.7 k) | B | 122.3/5 |
| R882 | 7030003410 | S.RES ERJ3GEYJ 561 V (560) | B | 108.9/15.9 |
| R883 | 7030003550 | S.RES ERJ3GEYJ 822 V (8.2 k) | B | 108.9/14.6 |
| R884 | 7030003520 | S.RES ERJ3GEYJ 472 V (4.7 k) | B | 108.9/13.3 |
| R885 | 7030003410 | S.RES ERJ3GEYJ 561 V (560) | B | 108.9/4.1 |
| R886 | 7030003550 | S.RES ERJ3GEYJ 822 V (8.2 k) | B | 109.7/6.2 |
| R887 | 7030003520 | S.RES ERJ3GEYJ 472 V (4.7 k) | B | 108.4/6.2 |
| R888 | 7030003360 | S.RES ERJ3GEYJ 221 V (220) | B | 181.6/48 |
| R889 | 7030003640 | S.RES ERJ3GEYJ 473 V (47 k) | B | 184.5/48.3 |
| R890 | 7030003360 | S.RES ERJ3GEYJ 221 V (220) | B | 191/47.8 |
| R891 | 7030003560 | S.RES ERJ3GEYJ 103 V (10 k) | B | 188.2/48.3 |
| R892 | 7030003730 | S.RES ERJ3GEYJ 274 V (270 k) | B | 190.2/50.2 |
| R893 | 7030003680 | S.RES ERJ3GEYJ 104 V (100 k) | B | 183.7/50.2 |
| R894 | 7030003200 | S.RES ERJ3GEYJ 100 V (10) | B | 193.2/55.7 |
| R895 | 7030003680 | S.RES ERJ3GEYJ 104 V (100 k) | B | 188.9/50.2 |
| R896 | 7030003200 | S.RES ERJ3GEYJ 100 V (10) | B | 192.9/52.8 |
| R901 | 7030003200 | S.RES ERJ3GEYJ 100 V (10) | T | 165.7/37.7 |
| R902 | 7030003200 | S.RES ERJ3GEYJ 100 V (10) | T | 166.1/30.8 |
| R903 | 7030003200 | S.RES ERJ3GEYJ 100 V (10) | T | 166.6/40.3 |
| R904 | 7030003200 | S.RES ERJ3GEYJ 100 V (10) | T | 167.1/28.2 |
| R905 | 7030003200 | S.RES ERJ3GEYJ 100 V (10) | T | 167.6/37.7 |
| R906 | 7030003200 | S.RES ERJ3GEYJ 100 V (10) | T | 168.1/30.8 |
| R907 | 7030003200 | S.RES ERJ3GEYJ 100 V (10) | T | 168.6/40.3 |
| R908 | 7030003200 | S.RES ERJ3GEYJ 100 V (10) | T | 169.1/28.2 |
| R909 | 7030003200 | S.RES ERJ3GEYJ 100 V (10) | T | 169.6/37.7 |
| R910 | 7030003200 | S.RES ERJ3GEYJ 100 V (10) | T | 170.1/30.8 |
| R911 | 7030003200 | S.RES ERJ3GEYJ 100 V (10) | T | 170.6/40.3 |
| R912 | 7030003200 | S.RES ERJ3GEYJ 100 V (10) | T | 171.6/37.7 |
| R913 | 7030003200 | S.RES ERJ3GEYJ 100 V (10) | T | 172.1/30.8 |
| R914 | 7030003200 | S.RES ERJ3GEYJ 100 V (10) | T | 172.6/40.3 |

## [LOGIC UNIT]

| REF NO. | ORDER NO. | DESCRIPTION | M. | H/V LOCATION |
|---|---|---|---|---|
| R915 | 7030003200 | S.RES ERJ3GEYJ 100 V (10) | T | 173.1/28.2 |
| R916 | 7030003200 | S.RES ERJ3GEYJ 100 V (10) | T | 173.6/37.7 |
| R917 | 7030003200 | S.RES ERJ3GEYJ 100 V (10) | T | 174.1/30.8 |
| R918 | 7030003200 | S.RES ERJ3GEYJ 100 V (10) | T | 174.6/40.3 |
| R919 | 7030003200 | S.RES ERJ3GEYJ 100 V (10) | T | 175.1/28.2 |
| R920 | 7030003200 | S.RES ERJ3GEYJ 100 V (10) | T | 175.6/37.7 |
| R921 | 7030003200 | S.RES ERJ3GEYJ 100 V (10) | T | 176.1/30.8 |
| R922 | 7030003200 | S.RES ERJ3GEYJ 100 V (10) | T | 176.6/40.3 |
| R923 | 7030003200 | S.RES ERJ3GEYJ 100 V (10) | T | 177.1/28.2 |
| R924 | 7030003200 | S.RES ERJ3GEYJ 100 V (10) | T | 177.6/37.7 |
| R925 | 7030003200 | S.RES ERJ3GEYJ 100 V (10) | T | 178.1/30.8 |
| R926 | 7030003200 | S.RES ERJ3GEYJ 100 V (10) | T | 178.6/40.3 |
| R927 | 7030003200 | S.RES ERJ3GEYJ 100 V (10) | T | 179.1/28.2 |
| R928 | 7030003200 | S.RES ERJ3GEYJ 100 V (10) | T | 179.6/37.7 |
| R929 | 7030003200 | S.RES ERJ3GEYJ 100 V (10) | T | 180.1/30.8 |
| R930 | 7030003200 | S.RES ERJ3GEYJ 100 V (10) | T | 180.6/40.3 |
| R931 | 7030003200 | S.RES ERJ3GEYJ 100 V (10) | T | 181.1/28.2 |
| R932 | 7030003200 | S.RES ERJ3GEYJ 100 V (10) | T | 182.1/30.8 |
| R933 | 7030003200 | S.RES ERJ3GEYJ 100 V (10) | T | 182.6/40.3 |
| R934 | 7030003200 | S.RES ERJ3GEYJ 100 V (10) | T | 183.1/28.2 |
| R935 | 7030003200 | S.RES ERJ3GEYJ 100 V (10) | T | 183.6/37.7 |
| R936 | 7030003200 | S.RES ERJ3GEYJ 100 V (10) | T | 184.1/30.8 |
| R937 | 7030003200 | S.RES ERJ3GEYJ 100 V (10) | T | 185.1/28.2 |
| R938 | 7030003200 | S.RES ERJ3GEYJ 100 V (10) | T | 133/37.7 |
| R939 | 7030003200 | S.RES ERJ3GEYJ 100 V (10) | T | 134.2/30.8 |
| R940 | 7030003200 | S.RES ERJ3GEYJ 100 V (10) | T | 134.4/37.8 |
| R941 | 7030003200 | S.RES ERJ3GEYJ 100 V (10) | T | 135.2/28.3 |
| R942 | 7030003200 | S.RES ERJ3GEYJ 100 V (10) | T | 135.7/37.7 |
| R943 | 7030003200 | S.RES ERJ3GEYJ 100 V (10) | T | 136.2/30.8 |
| R944 | 7030003200 | S.RES ERJ3GEYJ 100 V (10) | T | 136.7/40.3 |
| R945 | 7030003200 | S.RES ERJ3GEYJ 100 V (10) | T | 137.2/28.3 |
| R946 | 7030003200 | S.RES ERJ3GEYJ 100 V (10) | T | 137.7/37.7 |
| R947 | 7030003200 | S.RES ERJ3GEYJ 100 V (10) | T | 138.2/30.8 |
| R949 | 7030003200 | S.RES ERJ3GEYJ 100 V (10) | T | 139.2/28.3 |
| R950 | 7030003200 | S.RES ERJ3GEYJ 100 V (10) | T | 139.7/37.7 |
| R951 | 7030003200 | S.RES ERJ3GEYJ 100 V (10) | T | 140.2/30.8 |
| R952 | 7030003200 | S.RES ERJ3GEYJ 100 V (10) | T | 140.7/40.3 |
| R953 | 7030003200 | S.RES ERJ3GEYJ 100 V (10) | T | 141.2/28.3 |
| R954 | 7030003200 | S.RES ERJ3GEYJ 100 V (10) | T | 141.7/37.7 |
| R955 | 7030003200 | S.RES ERJ3GEYJ 100 V (10) | T | 142.2/30.8 |
| R956 | 7030003200 | S.RES ERJ3GEYJ 100 V (10) | T | 142.7/40.3 |
| R957 | 7030003200 | S.RES ERJ3GEYJ 100 V (10) | T | 143.2/28.3 |
| R958 | 7030003200 | S.RES ERJ3GEYJ 100 V (10) | T | 143.7/37.7 |
| R959 | 7030003200 | S.RES ERJ3GEYJ 100 V (10) | T | 144.2/30.8 |
| R960 | 7030003200 | S.RES ERJ3GEYJ 100 V (10) | T | 144.7/40.3 |
| R961 | 7030003200 | S.RES ERJ3GEYJ 100 V (10) | T | 145.7/37.7 |
| R962 | 7030003200 | S.RES ERJ3GEYJ 100 V (10) | T | 146.2/30.8 |
| R963 | 7030003200 | S.RES ERJ3GEYJ 100 V (10) | T | 146.7/40.3 |
| R964 | 7030003200 | S.RES ERJ3GEYJ 100 V (10) | T | 147.2/28.3 |
| R965 | 7030003200 | S.RES ERJ3GEYJ 100 V (10) | T | 147.7/37.7 |
| R966 | 7030003200 | S.RES ERJ3GEYJ 100 V (10) | T | 148.2/30.8 |
| R967 | 7030003200 | S.RES ERJ3GEYJ 100 V (10) | T | 148.7/40.3 |
| R968 | 7030003200 | S.RES ERJ3GEYJ 100 V (10) | T | 149.7/37.7 |
| R969 | 7030003200 | S.RES ERJ3GEYJ 100 V (10) | T | 150.2/28.3 |
| R970 | 7030003200 | S.RES ERJ3GEYJ 100 V (10) | T | 150.7/40.3 |
| R971 | 7030003200 | S.RES ERJ3GEYJ 100 V (10) | T | 151.2/30.8 |
| R974 | 7030003200 | S.RES ERJ3GEYJ 100 V (10) | T | 153.2/30.8 |
| R975 | 7030003200 | S.RES ERJ3GEYJ 100 V (10) | B | 214.5/83.4 |
| R976 | 7030003200 | S.RES ERJ3GEYJ 100 V (10) | B | 220.6/83 |
| R977 | 7030003200 | S.RES ERJ3GEYJ 100 V (10) | B | 214.5/86 |
| R978 | 7030003200 | S.RES ERJ3GEYJ 100 V (10) | B | 220.6/87 |
| R979 | 7030003200 | S.RES ERJ3GEYJ 100 V (10) | B | 214.5/88 |
| R980 | 7030003200 | S.RES ERJ3GEYJ 100 V (10) | B | 220.6/89 |
| R981 | 7030003200 | S.RES ERJ3GEYJ 100 V (10) | B | 220.6/91 |
| R982 | 7030003200 | S.RES ERJ3GEYJ 100 V (10) | B | 220.6/93 |
| R983 | 7030003200 | S.RES ERJ3GEYJ 100 V (10) | B | 214.5/94 |
| R984 | 7030003200 | S.RES ERJ3GEYJ 100 V (10) | B | 12.2/115.7 |
| R985 | 7030003200 | S.RES ERJ3GEYJ 100 V (10) | B | 13.6/115.7 |
| R986 | 7030003200 | S.RES ERJ3GEYJ 100 V (10) | B | 14.9/115.7 |
| R987 | 7030003200 | S.RES ERJ3GEYJ 100 V (10) | B | 16.2/115.7 |
| R988 | 7030003200 | S.RES ERJ3GEYJ 100 V (10) | B | 17.5/115.7 |
| R989 | 7030003200 | S.RES ERJ3GEYJ 100 V (10) | T | 181.6/37.7 |
| R990 | 7030003440 | S.RES ERJ3GEYJ 102 V (1 k) | B | 182.5/92.1 |
| R991 | 7030003440 | S.RES ERJ3GEYJ 102 V (1 k) | B | 183.5/83.5 |
| R992 | 7030003440 | S.RES ERJ3GEYJ 102 V (1 k) | B | 184.5/92.1 |
| R993 | 7030003440 | S.RES ERJ3GEYJ 102 V (1 k) | B | 185.5/83.5 |
| R994 | 7030003440 | S.RES ERJ3GEYJ 102 V (1 k) | B | 186.5/92.1 |
| R995 | 7030003440 | S.RES ERJ3GEYJ 102 V (1 k) | B | 187.5/83.5 |
| R996 | 7030003200 | S.RES ERJ3GEYJ 100 V (10) | B | 220.6/95.6 |
| R998 | 7030003440 | S.RES ERJ3GEYJ 102 V (1 k) | B | 190.5/92.1 |
| R999 | 7030003440 | S.RES ERJ3GEYJ 102 V (1 k) | B | 191.5/83.5 |
| R1000 | 7030003440 | S.RES ERJ3GEYJ 102 V (1 k) | B | 192.5/92.1 |
| R1003 | 7030003200 | S.RES ERJ3GEYJ 100 V (10) | B | 231.3/83 |
| R1004 | 7030003200 | S.RES ERJ3GEYJ 100 V (10) | B | 225.9/82.7 |
| R1005 | 7030003200 | S.RES ERJ3GEYJ 100 V (10) | B | 231.3/81 |
| R1006 | 7030003200 | S.RES ERJ3GEYJ 100 V (10) | B | 222.7/80 |
| R1007 | 7030003200 | S.RES ERJ3GEYJ 100 V (10) | B | 231.3/79 |
| R1008 | 7030003200 | S.RES ERJ3GEYJ 100 V (10) | B | 222.7/48.5 |
| R1009 | 7030003200 | S.RES ERJ3GEYJ 100 V (10) | B | 231.3/49.5 |
| R1010 | 7030003200 | S.RES ERJ3GEYJ 100 V (10) | B | 222.7/52.5 |
| R1011 | 7030003200 | S.RES ERJ3GEYJ 100 V (10) | B | 231.3/53.5 |
| R1012 | 7030003200 | S.RES ERJ3GEYJ 100 V (10) | B | 222.7/56.5 |

M.=Mounted side (T: Mounted on the Top side, B: Mounted on the Bottom side)
S.=Surface mount

## [LOGIC UNIT]

| REF NO. | ORDER NO. | DESCRIPTION | M. | H/V LOCATION |
|---|---|---|---|---|
| R1013 | 7030003200 | S.RES ERJ3GEYJ 100 V (10) | B | 231.3/57.5 |
| R1014 | 7030003200 | S.RES ERJ3GEYJ 100 V (10) | B | 222.7/58.5 |
| R1015 | 7030003200 | S.RES ERJ3GEYJ 100 V (10) | B | 231.3/59.5 |
| R1016 | 7030003200 | S.RES ERJ3GEYJ 100 V (10) | T | 181/22.1 |
| R1017 | 7030003200 | S.RES ERJ3GEYJ 100 V (10) | T | 179.7/22.1 |
| R1018 | 7030003200 | S.RES ERJ3GEYJ 100 V (10) | T | 176.7/22.1 |
| R1019 | 7030003200 | S.RES ERJ3GEYJ 100 V (10) | T | 174.7/22.2 |
| R1020 | 7030003200 | S.RES ERJ3GEYJ 100 V (10) | T | 173.4/22.2 |
| R1021 | 7030003200 | S.RES ERJ3GEYJ 100 V (10) | T | 172.1/22.2 |
| R1022 | 7030003200 | S.RES ERJ3GEYJ 100 V (10) | T | 170.8/22.2 |
| R1023 | 7030003200 | S.RES ERJ3GEYJ 100 V (10) | T | 169.5/22.2 |
| R1024 | 7030003200 | S.RES ERJ3GEYJ 100 V (10) | B | 220.7/85 |
| R1025 | 7030003320 | S.RES ERJ3GEYJ 101 V (100) | B | 120.5/9.7 |
| R1026 | 7030003320 | S.RES ERJ3GEYJ 101 V (100) | B | 108.9/8.1 |
| R1027 | 7030003320 | S.RES ERJ3GEYJ 101 V (100) | B | 137.3/17.2 |
| R1028 | 7030003320 | S.RES ERJ3GEYJ 101 V (100) | B | 135.6/7.2 |
| R1029 | 7030003520 | S.RES ERJ3GEYJ 472 V (4.7 k) | B | 120.5/11 |
| R1030 | 7030003520 | S.RES ERJ3GEYJ 472 V (4.7 k) | B | 120.5/7.1 |
| R1031 | 7030003520 | S.RES ERJ3GEYJ 472 V (4.7 k) | B | 108.9/12 |
| R1032 | 7030003520 | S.RES ERJ3GEYJ 472 V (4.7 k) | B | 108.9/9.4 |
| R1033 | 7030003860 | S.RES ERJ3GE JPW V | T | 188.9/62.5 |
| R1035 | 7030003540 | S.RES ERJ3GEYJ 682 V (6.8 k) | B | 192.2/60.1 |
| R1036 | 7030003540 | S.RES ERJ3GEYJ 682 V (6.8 k) | B | 184.5/64.7 |
| R1041 | 7030003520 | S.RES ERJ3GEYJ 472 V (4.7 k) | B | 173.8/28.2 |
| R1042 | 7030003550 | S.RES ERJ3GEYJ 822 V (8.2 k) | T | 115.2/16.6 |
| R1052 | 7030008240 | S.RES ERJ12YJ0R00U | T | 86.1/114.3 |
| R1053 | 7030008240 | S.RES ERJ12YJ0R00U | T | 67.5/114.4 |
| R1054 | 7030008240 | S.RES ERJ12YJ0R00U | T | 9.4/116.7 |
| R1056 | 7030003860 | S.RES ERJ3GE JPW V | T | 138.7/40.3 |
| R1057 | 7030003860 | S.RES ERJ3GE JPW V | B | 123.1/7.1 |
| R1101 | 7030003280 | S.RES ERJ3GEYJ 470 V (47) | T | 18.7/30.5 |
| R1102 | 7030003280 | S.RES ERJ3GEYJ 470 V (47) | T | 18.7/33.1 |
| R1103 | 7030003280 | S.RES ERJ3GEYJ 470 V (47) | T | 18.7/35.7 |
| R1104 | 7030003280 | S.RES ERJ3GEYJ 470 V (47) | T | 20.5/30.5 |
| R1105 | 7030003280 | S.RES ERJ3GEYJ 470 V (47) | T | 20.5/33.1 |
| R1106 | 7030003280 | S.RES ERJ3GEYJ 470 V (47) | T | 20.5/35.7 |
| R1107 | 7030003280 | S.RES ERJ3GEYJ 470 V (47) | T | 22.3/30.5 |
| R1108 | 7030003280 | S.RES ERJ3GEYJ 470 V (47) | T | 22.3/33.1 |
| R1109 | 7030003280 | S.RES ERJ3GEYJ 470 V (47) | T | 22.3/35.7 |
| R1110 | 7030003280 | S.RES ERJ3GEYJ 470 V (47) | T | 24.1/27.9 |
| R1111 | 7030003280 | S.RES ERJ3GEYJ 470 V (47) | T | 24.1/30.5 |
| R1112 | 7030003280 | S.RES ERJ3GEYJ 470 V (47) | T | 24.1/33.1 |
| R1113 | 7030003280 | S.RES ERJ3GEYJ 470 V (47) | T | 25.9/27.9 |
| R1114 | 7030003280 | S.RES ERJ3GEYJ 470 V (47) | T | 25.9/30.5 |
| R1115 | 7030003280 | S.RES ERJ3GEYJ 470 V (47) | T | 25.9/33.1 |
| R1116 | 7030003280 | S.RES ERJ3GEYJ 470 V (47) | T | 27.3/30.5 |
| R1117 | 7030003280 | S.RES ERJ3GEYJ 470 V (47) | T | 28.6/30.5 |
| R1118 | 7030003280 | S.RES ERJ3GEYJ 470 V (47) | T | 29.9/30.5 |
| R1119 | 7030003280 | S.RES ERJ3GEYJ 470 V (47) | T | 31.2/30.5 |
| R1120 | 7030003280 | S.RES ERJ3GEYJ 470 V (47) | T | 32.5/30.5 |
| R1121 | 7030003280 | S.RES ERJ3GEYJ 470 V (47) | T | 33.8/30.5 |
| R1122 | 7030003280 | S.RES ERJ3GEYJ 470 V (47) | T | 35.1/30.5 |
| R1123 | 7030003280 | S.RES ERJ3GEYJ 470 V (47) | T | 40.5/29.6 |
| R1124 | 7030003280 | S.RES ERJ3GEYJ 470 V (47) | T | 42.8/34.8 |
| R1125 | 7030003280 | S.RES ERJ3GEYJ 470 V (47) | T | 43.5/32.2 |
| R1126 | 7030003280 | S.RES ERJ3GEYJ 470 V (47) | T | 44.2/34.8 |
| R1127 | 7030003280 | S.RES ERJ3GEYJ 470 V (47) | T | 44.9/32.2 |
| R1128 | 7030003280 | S.RES ERJ3GEYJ 470 V (47) | T | 45.6/34.8 |
| R1129 | 7030003280 | S.RES ERJ3GEYJ 470 V (47) | T | 46.3/32.2 |
| R1130 | 7030003280 | S.RES ERJ3GEYJ 470 V (47) | T | 47/34.8 |
| R1131 | 7030003280 | S.RES ERJ3GEYJ 470 V (47) | T | 47.7/32.2 |
| R1132 | 7030003280 | S.RES ERJ3GEYJ 470 V (47) | T | 48.4/34.8 |
| R1133 | 7030003280 | S.RES ERJ3GEYJ 470 V (47) | T | 49.1/32.2 |
| R1134 | 7030003280 | S.RES ERJ3GEYJ 470 V (47) | T | 49.8/34.8 |
| R1135 | 7030003280 | S.RES ERJ3GEYJ 470 V (47) | T | 50.5/32.2 |
| R1136 | 7030003280 | S.RES ERJ3GEYJ 470 V (47) | T | 51.2/34.8 |
| R1137 | 7030003280 | S.RES ERJ3GEYJ 470 V (47) | T | 51.9/32.2 |
| R1138 | 7030003280 | S.RES ERJ3GEYJ 470 V (47) | T | 52.6/34.8 |
| R1139 | 7030003280 | S.RES ERJ3GEYJ 470 V (47) | T | 53.3/32.2 |
| R1140 | 7030003280 | S.RES ERJ3GEYJ 470 V (47) | T | 54/34.8 |
| R1141 | 7030003280 | S.RES ERJ3GEYJ 470 V (47) | T | 54.7/32.2 |
| R1142 | 7030003280 | S.RES ERJ3GEYJ 470 V (47) | T | 55.4/34.8 |
| R1143 | 7030003280 | S.RES ERJ3GEYJ 470 V (47) | T | 56.1/32.2 |
| R1144 | 7030003280 | S.RES ERJ3GEYJ 470 V (47) | T | 56.8/34.8 |
| R1145 | 7030003280 | S.RES ERJ3GEYJ 470 V (47) | T | 57.5/32.2 |
| R1146 | 7030003280 | S.RES ERJ3GEYJ 470 V (47) | T | 58.2/34.8 |
| R1151 | 7030003290 | S.RES ERJ3GEYJ 560 V (56) | T | 205.2/11.7 |
| R1152 | 7030003320 | S.RES ERJ3GEYJ 101 V (100) | T | 203.6/11.7 |
| R1153 | 7030003320 | S.RES ERJ3GEYJ 101 V (100) | T | 200.8/13.2 |
| R1154 | 7030003320 | S.RES ERJ3GEYJ 101 V (100) | T | 199.5/13.2 |
| R1155 | 7030003320 | S.RES ERJ3GEYJ 101 V (100) | B | 201.4/10.8 |
| R1156 | 7030003320 | S.RES ERJ3GEYJ 101 V (100) | T | 198.2/13.2 |
| R1157 | 7030003320 | S.RES ERJ3GEYJ 101 V (100) | B | 200.1/10.8 |
| R1158 | 7030003320 | S.RES ERJ3GEYJ 101 V (100) | T | 196.9/13.2 |
| R1159 | 7030003320 | S.RES ERJ3GEYJ 101 V (100) | B | 198.8/10.8 |
| R1160 | 7030003320 | S.RES ERJ3GEYJ 101 V (100) | T | 195.6/13.2 |
| R1161 | 7030003320 | S.RES ERJ3GEYJ 101 V (100) | B | 197.5/10.8 |
| R1162 | 7030003320 | S.RES ERJ3GEYJ 101 V (100) | B | 196.2/10.8 |
| R1163 | 7030003320 | S.RES ERJ3GEYJ 101 V (100) | T | 194.3/13.2 |
| R1164 | 7030003320 | S.RES ERJ3GEYJ 101 V (100) | T | 193/13.2 |
| R1165 | 7030003320 | S.RES ERJ3GEYJ 101 V (100) | T | 191.1/14.9 |
| R1166 | 7030003320 | S.RES ERJ3GEYJ 101 V (100) | T | 189.8/14.9 |

## [LOGIC UNIT]

| REF NO. | ORDER NO. | DESCRIPTION | M. | H/V LOCATION |
|---|---|---|---|---|
| R1167 | 7030003320 | S.RES ERJ3GEYJ 101 V (100) | T | 188.5/14.9 |
| R1168 | 7030003320 | S.RES ERJ3GEYJ 101 V (100) | T | 187.2/14.9 |
| R1169 | 7030003320 | S.RES ERJ3GEYJ 101 V (100) | T | 185.9/14.9 |
| R1170 | 7030003320 | S.RES ERJ3GEYJ 101 V (100) | T | 181.4/9.5 |
| | | | | |
| C1 | 4030011600 | S.CER C1608 JB 1E 104K-T | B | 69.7/83.3 |
| C2 | 4030011600 | S.CER C1608 JB 1E 104K-T | B | 68.1/83.3 |
| C3 | 4030011600 | S.CER C1608 JB 1E 104K-T | B | 63.3/83.3 |
| C4 | 4030011600 | S.CER C1608 JB 1E 104K-T | B | 59.3/83.3 |
| C5 | 4030011600 | S.CER C1608 JB 1E 104K-T | B | 48.9/83.3 |
| C6 | 4030011600 | S.CER C1608 JB 1E 104K-T | B | 66.9/100.4 |
| C7 | 4030011600 | S.CER C1608 JB 1E 104K-T | B | 62.1/100.4 |
| C8 | 4030011600 | S.CER C1608 JB 1E 104K-T | T | 69.7/107.5 |
| C9 | 4030011600 | S.CER C1608 JB 1E 104K-T | T | 68.1/107.5 |
| C10 | 4030011600 | S.CER C1608 JB 1E 104K-T | T | 63.3/107.5 |
| C11 | 4030011600 | S.CER C1608 JB 1E 104K-T | T | 59.3/107.5 |
| C12 | 4030011600 | S.CER C1608 JB 1E 104K-T | T | 48.9/107.5 |
| C13 | 4030011600 | S.CER C1608 JB 1E 104K-T | T | 66.6/90.9 |
| C14 | 4030011600 | S.CER C1608 JB 1E 104K-T | T | 61.9/90.9 |
| C51 | 4030011600 | S.CER C1608 JB 1E 104K-T | B | 105.5/54.7 |
| C52 | 4030011600 | S.CER C1608 JB 1E 104K-T | B | 97.1/46.1 |
| C53 | 4030011600 | S.CER C1608 JB 1E 104K-T | B | 94.4/46.1 |
| C54 | 4030011600 | S.CER C1608 JB 1E 104K-T | B | 106.6/51 |
| C55 | 4030011600 | S.CER C1608 JB 1E 104K-T | B | 109/65.9 |
| C56 | 4030011600 | S.CER C1608 JB 1E 104K-T | B | 114/65.9 |
| C57 | 4030011600 | S.CER C1608 JB 1E 104K-T | B | 127.6/63.1 |
| C58 | 4030011600 | S.CER C1608 JB 1E 104K-T | B | 127.7/55.9 |
| C59 | 4030011600 | S.CER C1608 JB 1E 104K-T | B | 117.5/46.1 |
| C60 | 4030011600 | S.CER C1608 JB 1E 104K-T | B | 111.5/46.1 |
| C61 | 4030009990 | S.CER C1608 CH 1H 200J-T | T | 143/78.1 |
| C62 | 4030011600 | S.CER C1608 JB 1E 104K-T | T | 139.9/100.6 |
| C63 | 4030008890 | S.CER C1608 JB 1H 273K-T | T | 144.5/100.6 |
| C64 | 4030011600 | S.CER C1608 JB 1E 104K-T | T | 146.7/102.5 |
| C65 | 4030011600 | S.CER C1608 JB 1E 104K-T | T | 96/34.2 |
| C66 | 4030011600 | S.CER C1608 JB 1E 104K-T | B | 34.1/27.4 |
| C101 | 4030011600 | S.CER C1608 JB 1E 104K-T | T | 23.3/71.9 |
| C102 | 4030011600 | S.CER C1608 JB 1E 104K-T | B | 43.2/48.2 |
| C103 | 4030011600 | S.CER C1608 JB 1E 104K-T | B | 47.1/78 |
| C104 | 4030011600 | S.CER C1608 JB 1E 104K-T | B | 46.8/58.8 |
| C105 | 4030011600 | S.CER C1608 JB 1E 104K-T | B | 49.5/71 |
| C106 | 4030011600 | S.CER C1608 JB 1E 104K-T | B | 46.8/57.5 |
| C107 | 4030011600 | S.CER C1608 JB 1E 104K-T | B | 52/57.5 |
| C108 | 4030011600 | S.CER C1608 JB 1E 104K-T | B | 57.7/57.5 |
| C109 | 4030011600 | S.CER C1608 JB 1E 104K-T | B | 59.6/60.8 |
| C110 | 4030011600 | S.CER C1608 JB 1E 104K-T | B | 46.8/68 |
| C111 | 4550007520 | S.TAN F931A106MAABMA | B | 57.7/48.8 |
| C112 | 4030011600 | S.CER C1608 JB 1E 104K-T | B | 59/50.5 |
| C113 | 4550007520 | S.TAN F931A106MAABMA | B | 63.6/48.8 |
| C114 | 4030011600 | S.CER C1608 JB 1E 104K-T | B | 62/50.5 |
| C115 | 4550007520 | S.TAN F931A106MAABMA | B | 68.8/48.8 |
| C116 | 4030011600 | S.CER C1608 JB 1E 104K-T | B | 64.9/50.5 |
| C117 | 4030011600 | S.CER C1608 JB 1E 104K-T | B | 46.9/71 |
| C118 | 4030011600 | S.CER C1608 JB 1E 104K-T | B | 46.8/61.4 |
| C119 | 4030011600 | S.CER C1608 JB 1E 104K-T | B | 46.8/69.3 |
| C120 | 4030011600 | S.CER C1608 JB 1E 104K-T | B | 59.6/69.4 |
| C121 | 4030011600 | S.CER C1608 JB 1E 104K-T | B | 57.8/70.2 |
| C122 | 4030011600 | S.CER C1608 JB 1E 104K-T | B | 56.5/70.2 |
| C123 | 4030006860 | S.CER C1608 JB 1H 102K-T | B | 57.3/78 |
| C124 | 4030011600 | S.CER C1608 JB 1E 104K-T | B | 52.1/71 |
| C125 | 4030011600 | S.CER C1608 JB 1E 104K-T | B | 54.7/71 |
| C126 | 4030011600 | S.CER C1608 JB 1E 104K-T | B | 46.8/66.7 |
| C127 | 4030011600 | S.CER C1608 JB 1E 104K-T | B | 43.2/50.8 |
| C128 | 4030011600 | S.CER C1608 JB 1E 104K-T | B | 52.2/50.8 |
| C129 | 4030011600 | S.CER C1608 JB 1E 104K-T | B | 46.1/64.8 |
| C130 | 4030011600 | S.CER C1608 JB 1E 104K-T | B | 59.6/66.8 |
| C131 | 4030011600 | S.CER C1608 JB 1E 104K-T | B | 66.4/68.7 |
| C132 | 4030011600 | S.CER C1608 JB 1E 104K-T | B | 59.6/63.6 |
| C133 | 4030011600 | S.CER C1608 JB 1E 104K-T | B | 47.1/50.9 |
| C134 | 4030011600 | S.CER C1608 JB 1E 104K-T | B | 39.3/58.6 |
| C135 | 4030011600 | S.CER C1608 JB 1E 104K-T | B | 46.8/60.1 |
| C136 | 4030011600 | S.CER C1608 JB 1E 104K-T | B | 54.6/57.5 |
| C137 | 4030011600 | S.CER C1608 JB 1E 104K-T | B | 49.4/57.5 |
| C138 | 4030011600 | S.CER C1608 JB 1E 104K-T | B | 54.7/69.3 |
| C139 | 4030011600 | S.CER C1608 JB 1E 104K-T | B | 59.6/58.2 |
| C140 | 4030006900 | S.CER C1608 JB 1H 103K-T | B | 66.4/58.5 |
| C141 | 4030011600 | S.CER C1608 JB 1E 104K-T | T | 64.3/38.6 |
| C142 | 4030011600 | S.CER C1608 JB 1E 104K-T | T | 76.8/32.5 |
| C144 | 4030011600 | S.CER C1608 JB 1E 104K-T | T | 7.9/62.8 |
| C145 | 4030011600 | S.CER C1608 JB 1E 104K-T | T | 10/62.1 |
| C146 | 4030007020 | S.CER C1608 CH 1H 120J-T | T | 8.1/58.8 |
| C147 | 4030007020 | S.CER C1608 CH 1H 120J-T | T | 10/59.5 |
| C148 | 4030011600 | S.CER C1608 JB 1E 104K-T | T | 6.7/70.5 |
| C149 | 4030011600 | S.CER C1608 JB 1E 104K-T | T | 7.4/73.7 |
| C201 | 4030011600 | S.CER C1608 JB 1E 104K-T | B | 118.1/103.3 |
| C202 | 4030011600 | S.CER C1608 JB 1E 104K-T | B | 120.7/103.3 |
| C203 | 4030011600 | S.CER C1608 JB 1E 104K-T | B | 124.2/103.3 |
| C204 | 4030011600 | S.CER C1608 JB 1E 104K-T | B | 127.3/103.3 |
| C205 | 4030011600 | S.CER C1608 JB 1E 104K-T | B | 137.4/103.5 |
| C206 | 4030011600 | S.CER C1608 JB 1E 104K-T | B | 120.7/87.6 |
| C207 | 4030011600 | S.CER C1608 JB 1E 104K-T | B | 125.5/87.7 |
| C208 | 4030011600 | S.CER C1608 JB 1E 104K-T | B | 117.7/85.8 |

M.=Mounted side (T: Mounted on the Top side, B: Mounted on the Bottom side)
S.=Surface mount

## [LOGIC UNIT]

| REF NO. | ORDER NO. | DESCRIPTION | M. | H/V LOCATION |
|---|---|---|---|---|
| C209 | 4030011600 | S.CER C1608 JB 1E 104K-T | B | 119.2/85.8 |
| C210 | 4030011600 | S.CER C1608 JB 1E 104K-T | B | 124/85.8 |
| C211 | 4030011600 | S.CER C1608 JB 1E 104K-T | B | 128/85.8 |
| C212 | 4030011600 | S.CER C1608 JB 1E 104K-T | B | 138.4/85.8 |
| C213 | 4030011600 | S.CER C1608 JB 1E 104K-T | B | 120.7/70 |
| C214 | 4030011600 | S.CER C1608 JB 1E 104K-T | B | 124.1/70 |
| C215 | 4030011600 | S.CER C1608 JB 1E 104K-T | B | 89.4/90.4 |
| C216 | 4030011600 | S.CER C1608 JB 1E 104K-T | B | 85.6/71.6 |
| C217 | 4030011600 | S.CER C1608 JB 1E 104K-T | B | 91.5/79.6 |
| C218 | 4030011600 | S.CER C1608 JB 1E 104K-T | B | 92.1/72.6 |
| C219 | 4030011600 | S.CER C1608 JB 1E 104K-T | B | 94.7/72.6 |
| C220 | 4030011600 | S.CER C1608 JB 1E 104K-T | B | 90.8/72.6 |
| C221 | 4030011600 | S.CER C1608 JB 1E 104K-T | B | 96.6/66.6 |
| C222 | 4030011600 | S.CER C1608 JB 1E 104K-T | B | 94.4/89.4 |
| C223 | 4030011600 | S.CER C1608 JB 1E 104K-T | B | 90.8/83.4 |
| C224 | 4030011600 | S.CER C1608 JB 1E 104K-T | B | 85.6/83.7 |
| C225 | 4030011600 | S.CER C1608 JB 1E 104K-T | B | 91.5/77 |
| C226 | 4030011600 | S.CER C1608 JB 1E 104K-T | B | 91.5/75.7 |
| C227 | 4030011600 | S.CER C1608 JB 1E 104K-T | B | 96.7/72.6 |
| C228 | 4030011600 | S.CER C1608 JB 1E 104K-T | B | 91.5/74.4 |
| C229 | 4030011600 | S.CER C1608 JB 1E 104K-T | B | 100.6/89.4 |
| C230 | 4030011600 | S.CER C1608 JB 1E 104K-T | B | 97.3/83.2 |
| C231 | 4030011600 | S.CER C1608 JB 1E 104K-T | B | 102.5/83.6 |
| C232 | 4030011600 | S.CER C1608 JB 1E 104K-T | B | 91.5/80.9 |
| C233 | 4030011600 | S.CER C1608 JB 1E 104K-T | B | 102.5/77.1 |
| C234 | 4030011600 | S.CER C1608 JB 1E 104K-T | B | 99.3/72.6 |
| C235 | 4030011600 | S.CER C1608 JB 1E 104K-T | B | 102.2/66.4 |
| C236 | 4030011600 | S.CER C1608 JB 1E 104K-T | B | 102.5/82.3 |
| C237 | 4030011600 | S.CER C1608 JB 1E 104K-T | B | 102.5/81 |
| C238 | 4030011600 | S.CER C1608 JB 1E 104K-T | B | 102.5/79.7 |
| C239 | 4030011600 | S.CER C1608 JB 1E 104K-T | B | 85.6/81.1 |
| C240 | 4030011600 | S.CER C1608 JB 1E 104K-T | B | 102.5/75.8 |
| C241 | 4030011600 | S.CER C1608 JB 1E 104K-T | B | 102.5/74.5 |
| C242 | 4030011600 | S.CER C1608 JB 1E 104K-T | B | 103.2/72.6 |
| C243 | 4030011600 | S.CER C1608 JB 1E 104K-T | B | 101.9/72.6 |
| C244 | 4030011600 | S.CER C1608 JB 1E 104K-T | B | 91.5/78.3 |
| C245 | 4030011600 | S.CER C1608 JB 1E 104K-T | B | 92.1/83.2 |
| C246 | 4030011600 | S.CER C1608 JB 1E 104K-T | B | 102.5/78.4 |
| C247 | 4030011600 | S.CER C1608 JB 1E 104K-T | B | 99.3/83.2 |
| C248 | 4030011600 | S.CER C1608 JB 1E 104K-T | B | 100.6/72.6 |
| C249 | 4030011600 | S.CER C1608 JB 1E 104K-T | B | 93.4/72.6 |
| C250 | 4030007050 | S.CER C1608 CH 1H 220J-T | T | 101/91.3 |
| C251 | 4030007050 | S.CER C1608 CH 1H 220J-T | T | 98.4/91.3 |
| C252 | 4030006990 | S.CER C1608 CH 1H 080D-T | T | 98.9/63.9 |
| C253 | 4030006990 | S.CER C1608 CH 1H 080D-T | T | 101.5/63.9 |
| C254 | 4030006900 | S.CER C1608 JB 1H 103K-T | T | 83.7/84.6 |
| C255 | 4510008520 | S.ELE EEE1CA470SP | T | 101.3/100.8 |
| C256 | 4030006900 | S.CER C1608 JB 1H 103K-T | T | 83/64.1 |
| C257 | 4510007130 | S.ELE EEFCD 0J 470R | T | 78.5/66.3 |
| C258 | 4030011600 | S.CER C1608 JB 1E 104K-T | T | 84.9/61 |
| C259 | 4030011600 | S.CER C1608 JB 1E 104K-T | B | 85.6/76.9 |
| C260 | 4030011600 | S.CER C1608 JB 1E 104K-T | T | 214.2/33 |
| C261 | 4030011600 | S.CER C1608 JB 1E 104K-T | T | 214.2/31.7 |
| C262 | 4030011600 | S.CER C1608 JB 1E 104K-T | T | 214.2/29.7 |
| C263 | 4030011600 | S.CER C1608 JB 1E 104K-T | T | 214.2/28.4 |
| C264 | 4030011600 | S.CER C1608 JB 1E 104K-T | T | 205.4/23.2 |
| C265 | 4510008540 | S.ELE EEE1CA100SR | T | 214.2/36.7 |
| C266 | 4030011600 | S.CER C1608 JB 1E 104K-T | T | 196.3/28.7 |
| C267 | 4030007100 | S.CER C1608 CH 1H 560J-T | B | 219.4/32.5 |
| C268 | 4030007100 | S.CER C1608 CH 1H 560J-T | B | 219.4/29.5 |
| C269 | 4030007100 | S.CER C1608 CH 1H 560J-T | B | 219.4/26.5 |
| C270 | 4030007050 | S.CER C1608 CH 1H 220J-T | B | 225/32.5 |
| C271 | 4030007050 | S.CER C1608 CH 1H 220J-T | B | 225/29.5 |
| C272 | 4030007050 | S.CER C1608 CH 1H 220J-T | B | 225/26.5 |
| C273 | 4030011600 | S.CER C1608 JB 1E 104K-T | T | 194.2/16.5 |
| C274 | 4030007170 | S.CER C1608 CH 1H 221J-T | T | 203.9/16.5 |
| C275 | 4030007170 | S.CER C1608 CH 1H 221J-T | T | 203.9/19.4 |
| C276 | 4030007050 | S.CER C1608 CH 1H 220J-T | B | 217.8/9.3 |
| C277 | 4030007050 | S.CER C1608 CH 1H 220J-T | B | 220.7/9.3 |
| C278 | 4510008500 | S.ELE EEE1CA101WP | T | 223.4/38.4 |
| C279 | 4030007050 | S.CER C1608 CH 1H 220J-T | B | 227.8/9.3 |
| C280 | 4030007050 | S.CER C1608 CH 1H 220J-T | B | 230.7/9.3 |
| C281 | 4510008500 | S.ELE EEE1CA101WP | T | 223.4/30.6 |
| C282 | 4030011600 | S.CER C1608 JB 1E 104K-T | B | 215.6/39.1 |
| C283 | 4510008550 | S.ELE EEE1HA010SR | T | 217.2/42 |
| C284 | 4030011600 | S.CER C1608 JB 1E 104K-T | B | 104.6/21.2 |
| C285 | 4510008540 | S.ELE EEE1CA100SR | T | 105.6/37.4 |
| C286 | 4510008540 | S.ELE EEE1CA100SR | T | 105.6/32.6 |
| C287 | 4030011600 | S.CER C1608 JB 1E 104K-T | B | 104.6/23.2 |
| C288 | 4510008540 | S.ELE EEE1CA100SR | T | 105.6/27.8 |
| C289 | 4030011600 | S.CER C1608 JB 1E 104K-T | B | 104.6/24.5 |
| C290 | 4030011600 | S.CER C1608 JB 1E 104K-T | B | 115.5/21.2 |
| C291 | 4510008540 | S.ELE EEE1CA100SR | T | 111.7/37.4 |
| C292 | 4510008540 | S.ELE EEE1CA100SR | T | 111.7/32.6 |
| C293 | 4030011600 | S.CER C1608 JB 1E 104K-T | B | 115.5/23.2 |
| C294 | 4510008540 | S.ELE EEE1CA100SR | T | 111.7/27.8 |
| C295 | 4030011600 | S.CER C1608 JB 1E 104K-T | B | 115.5/24.5 |
| C296 | 4030011600 | S.CER C1608 JB 1E 104K-T | B | 126.3/33.9 |
| C297 | 4510008540 | S.ELE EEE1CA100SR | T | 123.9/39.8 |
| C298 | 4030011600 | S.CER C1608 JB 1E 104K-T | B | 126.3/31.3 |
| C299 | 4510008540 | S.ELE EEE1CA100SR | T | 123.9/35 |
| C300 | 4030011600 | S.CER C1608 JB 1E 104K-T | B | 114/34.6 |

## [LOGIC UNIT]

| REF NO. | ORDER NO. | DESCRIPTION | M. | H/V LOCATION |
|---|---|---|---|---|
| C301 | 4510008540 | S.ELE EEE1CA100SR | T | 117.8/39.8 |
| C302 | 4030011600 | S.CER C1608 JB 1E 104K-T | B | 113.3/32.5 |
| C303 | 4510008540 | S.ELE EEE1CA100SR | T | 117.8/35 |
| C401 | 4030011600 | S.CER C1608 JB 1E 104K-T | B | 28.2/61.5 |
| C402 | 4030011600 | S.CER C1608 JB 1E 104K-T | B | 22.3/61.5 |
| C403 | 4030011600 | S.CER C1608 JB 1E 104K-T | B | 8.7/53.3 |
| C404 | 4030011600 | S.CER C1608 JB 1E 104K-T | B | 8.7/45.6 |
| C405 | 4030011600 | S.CER C1608 JB 1E 104K-T | B | 20.2/35.6 |
| C406 | 4030011600 | S.CER C1608 JB 1E 104K-T | B | 25.4/35.6 |
| C407 | 4030011600 | S.CER C1608 JB 1E 104K-T | B | 29.7/35.6 |
| C408 | 4030011600 | S.CER C1608 JB 1E 104K-T | B | 38.5/42.3 |
| C409 | 4030011600 | S.CER C1608 JB 1E 104K-T | B | 38.7/47.5 |
| C410 | 4030011600 | S.CER C1608 JB 1E 104K-T | B | 38.7/51 |
| C411 | 4030011600 | S.CER C1608 JB 1E 104K-T | B | 40.9/36.2 |
| C412 | 4030006860 | S.CER C1608 JB 1H 102K-T | T | 29.3/44.7 |
| C413 | 4030006900 | S.CER C1608 JB 1H 103K-T | T | 26.7/44.7 |
| C414 | 4030007150 | S.CER C1608 CH 1H 151J-T | T | 28/44.7 |
| C415 | 4030011600 | S.CER C1608 JB 1E 104K-T | B | 15.2/30.5 |
| C416 | 4510008540 | S.ELE EEE1CA100SR | T | 13.7/28.8 |
| C417 | 4030011600 | S.CER C1608 JB 1E 104K-T | B | 15.2/31.8 |
| C418 | 4510008540 | S.ELE EEE1CA100SR | T | 13.7/33.6 |
| C419 | 4030006900 | S.CER C1608 JB 1H 103K-T | T | 36.9/26.6 |
| C420 | 4030007150 | S.CER C1608 CH 1H 151J-T | T | 36.9/25.3 |
| C421 | 4550007520 | S.TAN F931A106MAABMA | B | 19.7/26.8 |
| C422 | 4030011600 | S.CER C1608 JB 1E 104K-T | T | 20.8/66.3 |
| C423 | 4030011600 | S.CER C1608 JB 1E 104K-T | B | 35.3/85.1 |
| C424 | 4030011600 | S.CER C1608 JB 1E 104K-T | B | 38.1/77.1 |
| C425 | 4030011600 | S.CER C1608 JB 1E 104K-T | B | 34.6/71.4 |
| C426 | 4030011600 | S.CER C1608 JB 1E 104K-T | B | 34.8/67.7 |
| C427 | 4030011600 | S.CER C1608 JB 1E 104K-T | B | 26.8/62.8 |
| C428 | 4030011600 | S.CER C1608 JB 1E 104K-T | B | 20.8/62.8 |
| C429 | 4030011600 | S.CER C1608 JB 1E 104K-T | B | 18.2/62.8 |
| C430 | 4030011600 | S.CER C1608 JB 1E 104K-T | B | 9.7/81.5 |
| C431 | 4030011600 | S.CER C1608 JB 1E 104K-T | B | 12.3/72.4 |
| C432 | 4030011600 | S.CER C1608 JB 1E 104K-T | B | 12.3/79 |
| C433 | 4030011600 | S.CER C1608 JB 1E 104K-T | B | 12.3/82.2 |
| C434 | 4030011600 | S.CER C1608 JB 1E 104K-T | B | 17.2/90.2 |
| C435 | 4030011600 | S.CER C1608 JB 1E 104K-T | B | 20.8/90.2 |
| C436 | 4030011600 | S.CER C1608 JB 1E 104K-T | B | 25.7/90.2 |
| C437 | 4030011600 | S.CER C1608 JB 1E 104K-T | B | 146.1/21.2 |
| C438 | 4030011600 | S.CER C1608 JB 1E 104K-T | B | 152.6/21.2 |
| C439 | 4030011600 | S.CER C1608 JB 1E 104K-T | B | 153/18.4 |
| C440 | 4010008500 | CER DEBB33D102KA2B | | |
| C601 | 4030011600 | S.CER C1608 JB 1E 104K-T | B | 169.4/51.4 |
| C602 | 4030011600 | S.CER C1608 JB 1E 104K-T | B | 169.1/57.7 |
| C603 | 4030011600 | S.CER C1608 JB 1E 104K-T | B | 79.6/44.7 |
| C604 | 4030011600 | S.CER C1608 JB 1E 104K-T | B | 99.9/36.7 |
| C605 | 4030011600 | S.CER C1608 JB 1E 104K-T | B | 102/21.3 |
| C606 | 4030011600 | S.CER C1608 JB 1E 104K-T | B | 83.2/16.8 |
| C607 | 4030011600 | S.CER C1608 JB 1E 104K-T | B | 81.5/16.8 |
| C608 | 4510008540 | S.ELE EEE1CA100SR | T | 67/16.3 |
| C609 | 4510008540 | S.ELE EEE1CA100SR | T | 62.4/34 |
| C610 | 4030006900 | S.CER C1608 JB 1H 103K-T | B | 71.2/19.5 |
| C611 | 4030006900 | S.CER C1608 JB 1H 103K-T | B | 71.2/20.8 |
| C612 | 4030007010 | S.CER C1608 CH 1H 100D-T | T | 80.9/16.9 |
| C613 | 4030007010 | S.CER C1608 CH 1H 100D-T | T | 83.5/16.9 |
| C614 | 4030011600 | S.CER C1608 JB 1E 104K-T | B | 86.2/14.2 |
| C615 | 4030006880 | S.CER C1608 JB 1H 472K-T | B | 71.2/31.2 |
| C616 | 4030006880 | S.CER C1608 JB 1H 472K-T | B | 71.2/29.9 |
| C617 | 4030006880 | S.CER C1608 JB 1H 472K-T | B | 71.2/28.6 |
| C618 | 4030006880 | S.CER C1608 JB 1H 472K-T | B | 71.2/27.3 |
| C619 | 4030006880 | S.CER C1608 JB 1H 472K-T | B | 71.2/26 |
| C620 | 4030006880 | S.CER C1608 JB 1H 472K-T | B | 71.2/24.7 |
| C621 | 4030006880 | S.CER C1608 JB 1H 472K-T | B | 71.2/23.4 |
| C622 | 4030006880 | S.CER C1608 JB 1H 472K-T | B | 71.2/22.1 |
| C623 | 4510008540 | S.ELE EEE1CA100SR | T | 178.6/62.5 |
| C624 | 4030011600 | S.CER C1608 JB 1E 104K-T | T | 174.9/60.6 |
| C625 | 4510008540 | S.ELE EEE1CA100SR | T | 184.7/62.5 |
| C626 | 4030011600 | S.CER C1608 JB 1E 104K-T | B | 63.7/20.3 |
| C627 | 4030011600 | S.CER C1608 JB 1E 104K-T | B | 60/20.3 |
| C628 | 4030011600 | S.CER C1608 JB 1E 104K-T | B | 73.6/39 |
| C629 | 4030011600 | S.CER C1608 JB 1E 104K-T | B | 57.2/39.8 |
| C630 | 4030011600 | S.CER C1608 JB 1E 104K-T | B | 150.9/51.7 |
| C631 | 4030011600 | S.CER C1608 JB 1E 104K-T | B | 148.9/48.1 |
| C632 | 4030011600 | S.CER C1608 JB 1E 104K-T | B | 131.8/66 |
| C633 | 4030011600 | S.CER C1608 JB 1E 104K-T | B | 138.2/66.7 |
| C634 | 4030011600 | S.CER C1608 JB 1E 104K-T | B | 150.9/58 |
| C635 | 4030011600 | S.CER C1608 JB 1E 104K-T | B | 131.1/58.5 |
| C636 | 4030011600 | S.CER C1608 JB 1E 104K-T | B | 131.1/52.1 |
| C801 | 4510008540 | S.ELE EEE1CA100SR | T | 141/114.6 |
| C802 | 4030011600 | S.CER C1608 JB 1E 104K-T | B | 138.5/110.6 |
| C803 | 4030011600 | S.CER C1608 JB 1E 104K-T | B | 138.5/113.3 |
| C804 | 4510008520 | S.ELE EEE1CA470SP | T | 147.2/113.8 |
| C805 | 4510008870 | S.ELE EEE1AA471UP | T | 100.2/110.4 |
| C806 | 4510008870 | S.ELE EEE1AA471UP | T | 109.5/110.4 |
| C807 | 4510008870 | S.ELE EEE1AA471UP | T | 119.4/100.6 |
| C808 | 4510008870 | S.ELE EEE1AA471UP | T | 119.9/109.6 |
| C809 | 4510008560 | S.ELE EEE1HAR47SR | T | 160/65.3 |
| C810 | 4510008560 | S.ELE EEE1HAR47SR | T | 166.6/65.3 |
| C811 | 4510008560 | S.ELE EEE1HAR47SR | T | 173.2/65.3 |
| C812 | 4030006860 | S.CER C1608 JB 1H 102K-T | B | 66.8/117.7 |
| C813 | 4030006860 | S.CER C1608 JB 1H 102K-T | B | 84.9/122.3 |

M.=Mounted side (T: Mounted on the Top side, B: Mounted on the Bottom side)
S.=Surface mount

## [LOGIC UNIT]

| REF NO. | ORDER NO. | DESCRIPTION | M. | H/V LOCATION |
|---|---|---|---|---|
| C814 | 4030006860 | S.CER C1608 JB 1H 102K-T | B | 83.6/116.9 |
| C815 | 4030006860 | S.CER C1608 JB 1H 102K-T | T | 88.8/115.9 |
| C816 | 4030006860 | S.CER C1608 JB 1H 102K-T | B | 97.3/121.4 |
| C817 | 4030006860 | S.CER C1608 JB 1H 102K-T | B | 100.6/122.1 |
| C818 | 4030006860 | S.CER C1608 JB 1H 102K-T | B | 103.1/122.1 |
| C819 | 4030006860 | S.CER C1608 JB 1H 102K-T | B | 105.6/122.1 |
| C820 | 4030006860 | S.CER C1608 JB 1H 102K-T | B | 108.8/121.4 |
| C821 | 4510008520 | S.ELE EEE1CA470SP | T | 211/16 |
| C822 | 4510008500 | S.ELE EEE1CA101WP | T | 14.3/109.4 |
| C823 | 4030006880 | S.CER C1608 JB 1H 472K-T | B | 33.9/114.5 |
| C824 | 4030006860 | S.CER C1608 JB 1H 102K-T | T | 20/24.5 |
| C825 | 4030011600 | S.CER C1608 JB 1E 104K-T | B | 20.4/107.6 |
| C826 | 4030006860 | S.CER C1608 JB 1H 102K-T | T | 122.2/118.1 |
| C827 | 4030006860 | S.CER C1608 JB 1H 102K-T | T | 117.6/118.7 |
| C828 | 4030007130 | S.CER C1608 CH 1H 101J-T | T | 118.9/118.7 |
| C829 | 4030006860 | S.CER C1608 JB 1H 102K-T | T | 127.2/116 |
| C830 | 4030007130 | S.CER C1608 CH 1H 101J-T | T | 128.5/116 |
| C831 | 4030006860 | S.CER C1608 JB 1H 102K-T | T | 130.5/115.5 |
| C832 | 4030007130 | S.CER C1608 CH 1H 101J-T | T | 130.5/116.8 |
| C833 | 4030006860 | S.CER C1608 JB 1H 102K-T | T | 133.9/116 |
| C834 | 4030007130 | S.CER C1608 CH 1H 101J-T | T | 132.6/116 |
| C835 | 4030011600 | S.CER C1608 JB 1E 104K-T | T | 127.8/110.6 |
| C836 | 4510008540 | S.ELE EEE1CA100SR | T | 127.8/106 |
| C837 | 4030011600 | S.CER C1608 JB 1E 104K-T | T | 135.7/106.8 |
| C838 | 4510008540 | S.ELE EEE1CA100SR | T | 132.6/106 |
| C850 | 4030011600 | S.CER C1608 JB 1E 104K-T | B | 165/40.9 |
| C851 | 4510008540 | S.ELE EEE1CA100SR | T | 128/31.2 |
| C852 | 4030009490 | S.CER C1608 JB 1H 821K-T | B | 142.1/11.6 |
| C853 | 4030009490 | S.CER C1608 JB 1H 821K-T | B | 142.7/14.9 |
| C855 | 4510008540 | S.ELE EEE1CA100SR | T | 117.7/29.1 |
| C856 | 4030009490 | S.CER C1608 JB 1H 821K-T | B | 134.5/17.2 |
| C857 | 4030009490 | S.CER C1608 JB 1H 821K-T | B | 131.7/19.8 |
| C859 | 4510008540 | S.ELE EEE1CA100SR | T | 123.2/29.1 |
| C860 | 4030009490 | S.CER C1608 JB 1H 821K-T | B | 136.9/7.2 |
| C861 | 4030009490 | S.CER C1608 JB 1H 821K-T | B | 140.8/7.2 |
| C865 | 4510008540 | S.ELE EEE1CA100SR | T | 119.4/22.2 |
| C866 | 4030007160 | S.CER C1608 CH 1H 181J-T | B | 121/5 |
| C867 | 4030009880 | S.CER C1608 JB 1H 682K-T | T | 115.2/17.9 |
| C868 | 4030008880 | S.CER C1608 JB 1H 223K-T | T | 115.2/15.3 |
| C869 | 4510008540 | S.ELE EEE1CA100SR | T | 109.4/16.3 |
| C871 | 4510008540 | S.ELE EEE1CA100SR | T | 104.6/16.2 |
| C873 | 4030011600 | S.CER C1608 JB 1E 104K-T | B | 120.5/8.4 |
| C874 | 4030011600 | S.CER C1608 JB 1E 104K-T | B | 108.9/10.7 |
| C875 | 4510008540 | S.ELE EEE1CA100SR | T | 114.6/22.2 |
| C876 | 4510008540 | S.ELE EEE1CA100SR | T | 119/16.3 |
| C877 | 4030011600 | S.CER C1608 JB 1E 104K-T | B | 137.3/18.5 |
| C878 | 4030011600 | S.CER C1608 JB 1E 104K-T | B | 134.3/7.2 |
| C879 | 4510008540 | S.ELE EEE1CA100SR | T | 124.2/22.2 |
| C880 | 4510008540 | S.ELE EEE1CA100SR | T | 124.2/16.3 |
| C883 | 4510008560 | S.ELE EEE1HAR47SR | T | 184.7/67.3 |
| C884 | 4510008560 | S.ELE EEE1HAR47SR | T | 180.1/71.1 |
| C901 | 4510008540 | S.ELE EEE1CA100SR | T | 183.7/50.9 |
| C902 | 4510008540 | S.ELE EEE1CA100SR | T | 188.9/50.9 |
| C903 | 4030011600 | S.CER C1608 JB 1E 104K-T | B | 186.3/50.2 |
| C904 | 4030011600 | S.CER C1608 JB 1E 104K-T | B | 193.7/57.5 |
| C905 | 4510008540 | S.ELE EEE1CA100SR | T | 188.9/57 |
| C906 | 4510008540 | S.ELE EEE1CA100SR | T | 183.7/57 |
| C907 | 4030006860 | S.CER C1608 JB 1H 102K-T | B | 170.6/40.3 |
| C908 | 4030006860 | S.CER C1608 JB 1H 102K-T | B | 171.6/37.7 |
| C909 | 4030006860 | S.CER C1608 JB 1H 102K-T | B | 173.6/37.7 |
| C910 | 4030006860 | S.CER C1608 JB 1H 102K-T | B | 175.1/28.2 |
| C911 | 4030006860 | S.CER C1608 JB 1H 102K-T | B | 176.1/30.8 |
| C912 | 4030006860 | S.CER C1608 JB 1H 102K-T | B | 177.6/37.7 |
| C913 | 4030006860 | S.CER C1608 JB 1H 102K-T | B | 178.6/40.3 |
| C914 | 4030006860 | S.CER C1608 JB 1H 102K-T | B | 179.6/37.7 |
| C915 | 4030006860 | S.CER C1608 JB 1H 102K-T | B | 180.1/30.8 |
| C916 | 4030006860 | S.CER C1608 JB 1H 102K-T | B | 180.6/40.3 |
| C917 | 4030006860 | S.CER C1608 JB 1H 102K-T | B | 181.1/28.2 |
| C918 | 4030006860 | S.CER C1608 JB 1H 102K-T | B | 182.1/30.8 |
| C919 | 4030006860 | S.CER C1608 JB 1H 102K-T | B | 182.6/40.3 |
| C920 | 4030006860 | S.CER C1608 JB 1H 102K-T | B | 183.1/28.2 |
| C921 | 4030006860 | S.CER C1608 JB 1H 102K-T | B | 183.6/37.7 |
| C922 | 4030006860 | S.CER C1608 JB 1H 102K-T | B | 184.1/30.8 |
| C923 | 4030006860 | S.CER C1608 JB 1H 102K-T | B | 133.7/37.7 |
| C924 | 4030006860 | S.CER C1608 JB 1H 102K-T | B | 134.7/40.3 |
| C925 | 4030006860 | S.CER C1608 JB 1H 102K-T | B | 135.7/37.7 |
| C926 | 4030006860 | S.CER C1608 JB 1H 102K-T | B | 136.2/30.8 |
| C927 | 4030006860 | S.CER C1608 JB 1H 102K-T | B | 136.7/40.3 |
| C928 | 4030006860 | S.CER C1608 JB 1H 102K-T | B | 137.2/25.5 |
| C929 | 4030006860 | S.CER C1608 JB 1H 102K-T | B | 137.7/37.7 |
| C930 | 4030006860 | S.CER C1608 JB 1H 102K-T | B | 138.2/28.1 |
| C931 | 4030006860 | S.CER C1608 JB 1H 102K-T | B | 138.7/40.3 |
| C932 | 4030006860 | S.CER C1608 JB 1H 102K-T | B | 139.2/25.5 |
| C933 | 4030006860 | S.CER C1608 JB 1H 102K-T | B | 139.7/37.7 |
| C934 | 4030006860 | S.CER C1608 JB 1H 102K-T | B | 140.2/28.1 |
| C935 | 4030006860 | S.CER C1608 JB 1H 102K-T | B | 140.7/40.3 |
| C936 | 4030006860 | S.CER C1608 JB 1H 102K-T | B | 141.2/25.5 |
| C937 | 4030006860 | S.CER C1608 JB 1H 102K-T | B | 141.7/37.7 |
| C938 | 4030006860 | S.CER C1608 JB 1H 102K-T | B | 142.2/22.9 |
| C939 | 4030006860 | S.CER C1608 JB 1H 102K-T | B | 142.7/40.3 |
| C940 | 4030006860 | S.CER C1608 JB 1H 102K-T | B | 143.2/25.5 |
| C941 | 4030006860 | S.CER C1608 JB 1H 102K-T | B | 144.2/22.9 |

## [LOGIC UNIT]

| REF NO. | ORDER NO. | DESCRIPTION | M. | H/V LOCATION |
|---|---|---|---|---|
| C942 | 4030006860 | S.CER C1608 JB 1H 102K-T | B | 146.2/30.8 |
| C943 | 4030006860 | S.CER C1608 JB 1H 102K-T | B | 147.2/28.3 |
| C944 | 4030006860 | S.CER C1608 JB 1H 102K-T | B | 148.2/30.9 |
| C945 | 4030006860 | S.CER C1608 JB 1H 102K-T | B | 150.2/28.3 |
| C946 | 4030006860 | S.CER C1608 JB 1H 102K-T | B | 151.2/30.9 |
| C947 | 4030006860 | S.CER C1608 JB 1H 102K-T | B | 214.5/84.7 |
| C948 | 4030006860 | S.CER C1608 JB 1H 102K-T | B | 220.6/81.7 |
| C949 | 4030006860 | S.CER C1608 JB 1H 102K-T | B | 223/91.7 |
| C950 | 4030006860 | S.CER C1608 JB 1H 102K-T | B | 220.6/94.3 |
| C951 | 4030006860 | S.CER C1608 JB 1H 102K-T | B | 214.5/92.7 |
| C952 | 4030006860 | S.CER C1608 JB 1H 102K-T | B | 213.6/72.3 |
| C953 | 4030006860 | S.CER C1608 JB 1H 102K-T | B | 211.5/76.1 |
| C954 | 4030006860 | S.CER C1608 JB 1H 102K-T | B | 205.7/77.8 |
| C955 | 4030006860 | S.CER C1608 JB 1H 102K-T | B | 211.5/79.5 |
| C956 | 4030006860 | S.CER C1608 JB 1H 102K-T | T | 21/113.9 |
| C957 | 4030006860 | S.CER C1608 JB 1H 102K-T | T | 24/113.9 |
| C958 | 4030006860 | S.CER C1608 JB 1H 102K-T | T | 27/113.9 |
| C959 | 4030006860 | S.CER C1608 JB 1H 102K-T | T | 30/113.8 |
| C960 | 4030006860 | S.CER C1608 JB 1H 102K-T | B | 180.6/79.6 |
| C961 | 4030006860 | S.CER C1608 JB 1H 102K-T | B | 183.2/90.3 |
| C962 | 4030006860 | S.CER C1608 JB 1H 102K-T | B | 187.7/90.3 |
| C963 | 4030006860 | S.CER C1608 JB 1H 102K-T | B | 188.7/81.7 |
| C964 | 4030006860 | S.CER C1608 JB 1H 102K-T | B | 193/81.7 |
| C965 | 4030006860 | S.CER C1608 JB 1H 102K-T | B | 193.7/90.3 |
| C966 | 4030006860 | S.CER C1608 JB 1H 102K-T | B | 194.9/78.8 |
| C967 | 4030006860 | S.CER C1608 JB 1H 102K-T | B | 222.7/78.7 |
| C968 | 4030006860 | S.CER C1608 JB 1H 102K-T | B | 228.7/79 |
| C969 | 4030006860 | S.CER C1608 JB 1H 102K-T | B | 222/74.4 |
| C970 | 4030006860 | S.CER C1608 JB 1H 102K-T | B | 229.9/74.4 |
| C971 | 4030006860 | S.CER C1608 JB 1H 102K-T | B | 220.9/49.2 |
| C972 | 4030006860 | S.CER C1608 JB 1H 102K-T | B | 229.5/50.2 |
| C973 | 4030006860 | S.CER C1608 JB 1H 102K-T | B | 227.1/62.2 |
| C974 | 4030006860 | S.CER C1608 JB 1H 102K-T | B | 218.4/63.2 |
| C975 | 4030006860 | S.CER C1608 JB 1H 102K-T | B | 227.1/66.7 |
| C976 | 4030006860 | S.CER C1608 JB 1H 102K-T | B | 218.4/68.1 |
| C977 | 4030006860 | S.CER C1608 JB 1H 102K-T | T | 181.7/23.9 |
| C978 | 4030006860 | S.CER C1608 JB 1H 102K-T | T | 159.4/23.6 |
| C979 | 4030006860 | S.CER C1608 JB 1H 102K-T | T | 190.4/18.9 |
| C980 | 4030006860 | S.CER C1608 JB 1H 102K-T | T | 188.7/24.5 |
| C981 | 4030006860 | S.CER C1608 JB 1H 102K-T | T | 166.1/22.6 |
| C982 | 4030006860 | S.CER C1608 JB 1H 102K-T | T | 173.3/42.7 |
| C983 | 4030011600 | S.CER C1608 JB 1E 104K-T | T | 180.7/84.3 |
| C984 | 4030010210 | S.CER C3216 JB 1C 105M-T | B | 198.6/85.6 |
| C985 | 4030011600 | S.CER C1608 JB 1E 104K-T | T | 195.5/83.6 |
| C991 | 4030006880 | S.CER C1608 JB 1H 472K-T | T | 208.4/92 |
| C992 | 4030006880 | S.CER C1608 JB 1H 472K-T | T | 208.4/94 |
| C993 | 4030006880 | S.CER C1608 JB 1H 472K-T | T | 220.2/93 |
| C994 | 4030006880 | S.CER C1608 JB 1H 472K-T | T | 220.2/81.4 |
| C995 | 4030006880 | S.CER C1608 JB 1H 472K-T | T | 208.3/80 |
| C996 | 4030006880 | S.CER C1608 JB 1H 472K-T | T | 220.2/78.6 |
| C997 | 4030006880 | S.CER C1608 JB 1H 472K-T | T | 218.4/73.2 |
| | | | | |
| J1 | 6510022490 | S.CNR AXK5S30045P | T | 40/98 |
| J2 | 6510019870 | S.CNR AXK5S40045P | T | 85/98 |
| J51 | 6910014251 | CNR IMSA-9202B-2-06Z041-PT1 | | |
| J102 | 6510019981 | S.CNR 52808-1671 (1690) | T | 72.5/40 |
| J602 | 6510019971 | S.CNR 52808-1071 | T | 95.5/14.5 |
| J604 | 6510019971 | S.CNR 52808-1071 | T | 72.5/23 |
| J802 | 6510024261 | S.CNR S9B-PH-SM4-TB (LF) (SN) | T | 158.5/5 |
| J803 | 6510024401 | CNR S11B-EH (LF) (SN) | | |
| J804 | 6510024251 | S.CNR S5B-PH-SM4-TB (LF) (SN) | T | 213.2/5 |
| J805 | 6510024111 | S.CNR 52793-2070 (2090) | T | 129.5/123.9 |
| J806 | 6510024131 | S.CNR IMSA-9637S-40Y905 | T | 193/4.7 |
| J807 | 6510024150 | S.CNR 50FY-BMT-TB | T | 53.6/22 |
| J808 | 6510022470 | S.CNR 40FLT-SM1-TB | T | 175.3/34.3 |
| J809 | 6510022470 | S.CNR 40FLT-SM1-TB | T | 143.4/34.3 |
| J810 | 6510022731 | S.CNR S13B-PH-SM4-TB (LF) (SN) | T | 120/7 |
| J811 | 6510021561 | S.CNR 52808-2470 (2490) | T | 214.3/84.5 |
| J812 | 6510020701 | S.CNR 52793-1270 (1290) | T | 19.5/123.9 |
| J813 | 6510020081 | S.CNR 52808-2071 (2090) | T | 189/89.8 |
| J814 | 6510019971 | S.CNR 52808-1071 | T | 229/79.5 |
| J815 | 6510019991 | S.CNR 52808-2271 (2291) | T | 229/58 |
| J816 | 6510019991 | S.CNR 52808-2271 (2291) | T | 171.2/17.5 |
| J820 | 6510003580 | CNR S10B-EH-S | | |
| J821 | 6510003550 | CNR S07B-EH-S | | |
| J822 | 6510021601 | S.CNR S2B-PH-SM4-TB (LF) (SN) | T | 15.5/18 |
| J823 | 6510021601 | S.CNR S2B-PH-SM4-TB (LF) (SN) | T | 53.8/122.6 |
| J824 | 6510024100 | CNR SC25-02WL | | |
| J825 | 6510019421 | S.CNR B8B-ZR-SM4-TF (LF) (SN) | T | 29.4/20.8 |
| J826 | 6510023801 | S.CNR S4B-ZR-SM4A-TF (LF) (SN) | T | 141.3/4.5 |
| | | | | |
| DS401 | 5040002930 | S.LED SML-512MW T86 | T | 11.9/96.4 |
| DS402 | 5040002930 | S.LED SML-512MW T86 | T | 11.9/94.9 |
| DS403 | 5040002930 | S.LED SML-512MW T86 | T | 11.9/93.1 |
| | | | | |
| S51 | 2260001890 | S.SW SKQDPA | T | 142.6/106.8 |
| | | | | |
| T401 | 5920000841 | S.TSM H1102NL | T | 150/20 |

M.=Mounted side (T: Mounted on the Top side, B: Mounted on the Bottom side)
S.=Surface mount

## [LOGIC UNIT]

| REF NO. | ORDER NO. | DESCRIPTION | M. | H/V LOCATION |
|---|---|---|---|---|
| EP101 | 6910013310 | S.BEA MMZ1608D121B | T | 3.6/74.9 |
| EP102 | 6910013310 | S.BEA MMZ1608D121B | T | 10.3/80.5 |
| EP103 | 6910013310 | S.BEA MMZ1608D121B | T | 14.9/80.7 |
| EP201 | 6910012350 | S.BEA MMZ1608Y 102BT | T | 201.5/22.1 |
| EP202 | 6910012350 | S.BEA MMZ1608Y 102BT | T | 198.3/28 |
| EP203 | 6910012350 | S.BEA MMZ1608Y 102BT | T | 83.7/86.4 |
| EP204 | 6910012350 | S.BEA MMZ1608Y 102BT | T | 79.6/72.4 |
| EP401 | 6910013310 | S.BEA MMZ1608D121B | T | 19.4/79.6 |
| EP402 | 6910013310 | S.BEA MMZ1608D121B | T | 17.3/75.6 |
| EP403 | 6910013310 | S.BEA MMZ1608D121B | T | 19.4/82.5 |
| EP801 | 6910013310 | S.BEA MMZ1608D121B | T | 204.4/9.8 |
| EP802 | 6910013310 | S.BEA MMZ1608D121B | T | 202.1/10.6 |
| EP803 | 6910013310 | S.BEA MMZ1608D121B | T | 200.8/10.6 |
| EP804 | 6910013310 | S.BEA MMZ1608D121B | T | 199.5/10.6 |
| EP805 | 6910013310 | S.BEA MMZ1608D121B | B | 201.4/8.2 |
| EP806 | 6910013310 | S.BEA MMZ1608D121B | T | 198.2/10.6 |
| EP807 | 6910013310 | S.BEA MMZ1608D121B | B | 200.1/8.2 |
| EP808 | 6910013310 | S.BEA MMZ1608D121B | T | 196.9/10.6 |
| EP809 | 6910013310 | S.BEA MMZ1608D121B | B | 198.8/8.2 |
| EP810 | 6910013310 | S.BEA MMZ1608D121B | T | 195.6/10.6 |
| EP811 | 6910013310 | S.BEA MMZ1608D121B | B | 197.5/8.2 |
| EP812 | 6910013310 | S.BEA MMZ1608D121B | B | 196.2/8.2 |
| EP813 | 6910013310 | S.BEA MMZ1608D121B | T | 194.3/10.6 |
| EP814 | 6910013310 | S.BEA MMZ1608D121B | T | 193/10.6 |
| EP815 | 6910013310 | S.BEA MMZ1608D121B | T | 191.7/10.9 |
| EP816 | 6910013310 | S.BEA MMZ1608D121B | T | 190.4/11.6 |
| EP817 | 6910013310 | S.BEA MMZ1608D121B | T | 189.1/12.3 |
| EP818 | 6910013310 | S.BEA MMZ1608D121B | T | 187.8/12 |
| EP819 | 6910013310 | S.BEA MMZ1608D121B | T | 186.5/11.6 |
| EP820 | 6910013310 | S.BEA MMZ1608D121B | T | 183.5/10 |
| EP821 | 6910015980 | S.BEA MMZ1608S 181CT-AS | T | 71.1/116.5 |
| EP822 | 6910015980 | S.BEA MMZ1608S 181CT-AS | T | 72.5/116.5 |
| EP826 | 6910012350 | S.BEA MMZ1608Y 102BT | T | 133.2/118.1 |
| EP827 | 6910012350 | S.BEA MMZ1608Y 102BT | B | 137.3/124.5 |
| EP828 | 6910012350 | S.BEA MMZ1608Y 102BT | B | 137.3/123.1 |
| EP829 | 6910012350 | S.BEA MMZ1608Y 102BT | T | 135.2/117.3 |
| EP972 | 6910015970 | S.BEA MMZ1608B 301CT-AS | T | 139/11.1 |
| EP973 | 6910015970 | S.BEA MMZ1608B 301CT-AS | T | 142/11.1 |
| EP996 | 6910015970 | S.BEA MMZ1608B 301CT-AS | B | 188.5/92.1 |
| EP997 | 6910015970 | S.BEA MMZ1608B 301CT-AS | B | 189.5/83.5 |
| EP1001 | 6910015970 | S.BEA MMZ1608B 301CT-AS | B | 193.5/83.5 |
| EP1002 | 6910015970 | S.BEA MMZ1608B 301CT-AS | B | 194.5/92.1 |
| EP1101 | 6910013310 | S.BEA MMZ1608D121B | T | 39.4/13.9 |
| EP1102 | 6910013310 | S.BEA MMZ1608D121B | T | 40.1/16.6 |
| EP1103 | 6910013310 | S.BEA MMZ1608D121B | T | 40.8/13.9 |
| EP1104 | 6910013310 | S.BEA MMZ1608D121B | T | 41.5/16.6 |
| EP1105 | 6910013310 | S.BEA MMZ1608D121B | T | 42.2/13.9 |
| EP1106 | 6910013310 | S.BEA MMZ1608D121B | T | 42.9/16.6 |
| EP1107 | 6910013310 | S.BEA MMZ1608D121B | T | 43.6/13.9 |
| EP1108 | 6910013310 | S.BEA MMZ1608D121B | T | 44.3/16.6 |
| EP1109 | 6910013310 | S.BEA MMZ1608D121B | T | 45/13.9 |
| EP1110 | 6910013310 | S.BEA MMZ1608D121B | T | 45.7/16.6 |
| EP1111 | 6910013310 | S.BEA MMZ1608D121B | T | 46.4/13.9 |
| EP1112 | 6910013310 | S.BEA MMZ1608D121B | T | 47.1/16.6 |
| EP1113 | 6910013310 | S.BEA MMZ1608D121B | T | 47.8/13.9 |
| EP1114 | 6910013310 | S.BEA MMZ1608D121B | T | 48.5/16.6 |
| EP1115 | 6910013310 | S.BEA MMZ1608D121B | T | 49.2/13.9 |
| EP1116 | 6910013310 | S.BEA MMZ1608D121B | T | 49.9/16.6 |
| EP1117 | 6910013310 | S.BEA MMZ1608D121B | T | 50.6/13.9 |
| EP1118 | 6910013310 | S.BEA MMZ1608D121B | T | 51.3/16.6 |
| EP1119 | 6910013310 | S.BEA MMZ1608D121B | T | 52/13.9 |
| EP1120 | 6910013310 | S.BEA MMZ1608D121B | T | 52.7/16.6 |
| EP1121 | 6910013310 | S.BEA MMZ1608D121B | T | 53.4/13.9 |
| EP1122 | 6910013310 | S.BEA MMZ1608D121B | T | 54.1/16.6 |
| EP1123 | 6910013310 | S.BEA MMZ1608D121B | T | 54.8/13.9 |
| EP1124 | 6910013310 | S.BEA MMZ1608D121B | T | 42.8/29.6 |
| EP1125 | 6910013310 | S.BEA MMZ1608D121B | T | 43.5/27 |
| EP1126 | 6910013310 | S.BEA MMZ1608D121B | T | 44.2/29.6 |
| EP1127 | 6910013310 | S.BEA MMZ1608D121B | T | 44.9/27 |
| EP1128 | 6910013310 | S.BEA MMZ1608D121B | T | 45.6/29.6 |
| EP1129 | 6910013310 | S.BEA MMZ1608D121B | T | 46.3/27 |
| EP1130 | 6910013310 | S.BEA MMZ1608D121B | T | 47/29.6 |
| EP1131 | 6910013310 | S.BEA MMZ1608D121B | T | 47.7/27 |
| EP1132 | 6910013310 | S.BEA MMZ1608D121B | T | 48.4/29.6 |
| EP1133 | 6910013310 | S.BEA MMZ1608D121B | T | 49.1/27 |
| EP1134 | 6910013310 | S.BEA MMZ1608D121B | T | 49.8/29.6 |
| EP1135 | 6910013310 | S.BEA MMZ1608D121B | T | 50.5/27 |
| EP1136 | 6910013310 | S.BEA MMZ1608D121B | T | 51.2/29.6 |
| EP1137 | 6910013310 | S.BEA MMZ1608D121B | T | 51.9/27 |
| EP1138 | 6910013310 | S.BEA MMZ1608D121B | T | 52.6/29.6 |
| EP1139 | 6910013310 | S.BEA MMZ1608D121B | T | 53.3/27 |
| EP1140 | 6910013310 | S.BEA MMZ1608D121B | T | 54/29.6 |
| EP1141 | 6910013310 | S.BEA MMZ1608D121B | T | 54.7/27 |
| EP1142 | 6910013310 | S.BEA MMZ1608D121B | T | 55.4/29.6 |
| EP1143 | 6910013310 | S.BEA MMZ1608D121B | T | 56.1/27 |
| EP1144 | 6910013310 | S.BEA MMZ1608D121B | T | 56.8/29.6 |
| EP1145 | 6910013310 | S.BEA MMZ1608D121B | T | 57.5/27 |
| EP1146 | 6910013310 | S.BEA MMZ1608D121B | T | 58.2/29.6 |

## [PA UNIT]

| REF NO. | ORDER NO. | DESCRIPTION | M. | H/V LOCATION |
|---|---|---|---|---|
| MF1 | 2710000770 | FAN FCB34AC12A | | |
| W1 | 8900012790 | CBL OPC-1299 | | |

## [PA200W BOARD]

| REF NO. | ORDER NO. | DESCRIPTION | M. | H/V LOCATION |
|---|---|---|---|---|
| IC2 | 1180001541 | S.IC TC78L08F (TE12L,F) | T | 58.8/15.1 |
| Q1 | 1520000531 | S.TR 2SB1119S-TD-E | T | 42.8/19.2 |
| Q2 | 1590000680 | S.TR DTC114EUA T106 | T | 45.8/13.5 |
| Q101 | 1560001241 | S.FET RD01MUS1-T113 | T | 5.9/66.4 |
| Q201 | 1590003050 | S.FET PD55003 | T | 20.5/53.1 |
| Q301 | 1590003350 | FET SD2918 | T | 64/45.8 |
| Q401 | 1590003361 | FET SD2931-12 | | |
| Q402 | 1590003361 | FET SD2931-12 | | |
| D1 | 1730000561 | S.ZEN RD2.7M-T2B-A B1 | T | 100.6/22.8 |
| D401 | 1750000271 | S.DIO 1SS301 (TE85R,F) | T | 116.8/99.1 |
| D402 | 1750000271 | S.DIO 1SS301 (TE85R,F) | T | 118.3/35.9 |
| D403 | 1750000271 | S.DIO 1SS301 (TE85R,F) | T | 104/98.3 |
| D404 | 1750000271 | S.DIO 1SS301 (TE85R,F) | T | 104/35.7 |
| L1 | 6200005011 | S.COL NLV25T-100J | T | 14.7/18 |
| L2 | 6200005011 | S.COL NLV25T-100J | T | 14.7/20.5 |
| L3 | 6200005011 | S.COL NLV25T-100J | T | 14.7/23 |
| L6 | 6200005011 | S.COL NLV25T-100J | T | 14.7/25.5 |
| L7 | 6200010881 | S.COL CDRH124NP-330MC | T | 77.3/11 |
| L101 | 6200005131 | S.COL NLC453232T-101K-PF | T | 5.6/59.6 |
| L102 | 6200007220 | S.COL EXCCL4532U1 | T | 6/38.4 |
| L201 | 6180001240 | COL LAL 04NA 820K | | |
| L202 | 6140004350 | COL LR-475 | | |
| L301 | 6200003261 | S.COL NLV32T-101J | T | 46.1/36.4 |
| L303 | 6200001831 | S.COL NLV32T-100J | T | 86.9/26.2 |
| L304 | 2040000490 | COL EXC-ELDR25C | | |
| L305 | 2040000490 | COL EXC-ELDR25C | | |
| L306 | 6140004340 | COL LR-474 | | |
| L307 | 6200001831 | S.COL NLV32T-100J | T | 75.7/100.2 |
| L401 | 6200003261 | S.COL NLV32T-101J | T | 100.4/98.3 |
| L402 | 6200003261 | S.COL NLV32T-101J | T | 100.1/35.8 |
| L403 | 6140002590 | COL LR-296 (TR18X8X8 D12A) | | |
| L404 | 6140000720 | COL LR-95 | T | 166.4/67 |
| L501 | 6140002030 | COL LR-230 (SK-10M-15Y 120) | | |
| R1 | 7030003440 | S.RES ERJ3GEYJ 102 V (1 k) | T | 42.8/12.8 |
| R2 | 7030003560 | S.RES ERJ3GEYJ 103 V (10 k) | T | 42.8/14.2 |
| R3 | 7510001740 | TMR DTN-C103F3H-STS-40 | | |
| R4 | 7030000380 | S.RES MCR10EZHJ 1 k | T | 39.7/22.5 |
| R5 | 7030008061 | S.RES ERA3YED 222V (2.2 k) | T | 104.3/23.1 |
| R6 | 7030007210 | S.RES ERA3YEB 102V (1 k) | T | 103.6/16.5 |
| R7 | 7030007210 | S.RES ERA3YEB 102V (1 k) | T | 103.6/17.8 |
| R101 | 7030003370 | S.RES ERJ3GEYJ 271 V (270) | T | 6/87.2 |
| R102 | 7030003220 | S.RES ERJ3GEYJ 150 V (15) | T | 3.9/86.1 |
| R103 | 7030003370 | S.RES ERJ3GEYJ 271 V (270) | T | 6/85 |
| R104 | 7030003360 | S.RES ERJ3GEYJ 221 V (220) | T | 4.8/71.3 |
| R105 | 7030003430 | S.RES ERJ3GEYJ 821 V (820) | T | 6/73.3 |
| R106 | 7030003480 | S.RES ERJ3GEYJ 222 V (2.2 k) | T | 9.2/73.8 |
| R107 | 7030003440 | S.RES ERJ3GEYJ 102 V (1 k) | T | 2.2/64.7 |
| R108 | 7030003200 | S.RES ERJ3GEYJ 100 V (10) | T | 9.2/68.3 |
| R110 | 7030000230 | S.RES MCR10EZHJ 56 | T | 11.3/56.6 |
| R111 | 7030003420 | S.RES ERJ3GEYJ 681 V (680) | T | 13.3/58.6 |
| R112 | 7030003510 | S.RES ERJ3GEYJ 392 V (3.9 k) | T | 12.6/60.6 |
| R113 | 7030003500 | S.RES ERJ3GEYJ 332 V (3.3 k) | T | 6.8/75.2 |
| R115 | 7030003520 | S.RES ERJ3GEYJ 472 V (4.7 k) | T | 13.1/40.8 |
| R117 | 7030003530 | S.RES ERJ3GEYJ 562 V (5.6 k) | T | 7.7/76.5 |
| R118 | 7030003550 | S.RES ERJ3GEYJ 822 V (8.2 k) | T | 11.7/40.8 |
| R119 | 7030008240 | S.RES ERJ12YJ0R00U | T | 5/49.6 |
| R201 | 7030004050 | S.RES ERJ3GEYJ 1R0 V (1) | T | 13.8/48.6 |
| R202 | 7030003410 | S.RES ERJ3GEYJ 561 V (560) | T | 23.1/43.1 |
| R203 | 7030010800 | S.RES ERJ1TYJ 2R7U (2.7) | T | 18.4/65.5 |
| R205 | 7030006260 | S.RES ERJ12YJ471U (470) | T | 30.3/55.7 |
| R301 | 7310005210 | TRI VM5CK-PVB 20 k | | |
| R302 | 7030008180 | S.RES ERJ12YJ331U (330) | T | 48.3/40.6 |
| R305 | 7030003530 | S.RES ERJ3GEYJ 562 V (5.6 k) | T | 49.6/43.5 |
| R307 | 7070000830 | RES ERG3SJ 101 (100) | | |
| R309 | 7030010570 | S.RES ERJ1TYJ 4R7U (4.7) | T | 80/45.8 |
| R310 | 7310005200 | TRI VM5CK-PVB 2 k | | |
| R312 | 7070000830 | RES ERG3SJ 101 (100) | | |
| R401 | 7030010960 | S.RES ERJ1TYJ 120U (12) | T | 89.8/90.7 |
| R402 | 7030010960 | S.RES ERJ1TYJ 120U (12) | T | 93.5/90.7 |

M.=Mounted side (T: Mounted on the Top side, B: Mounted on the Bottom side)
S.=Surface mount

## [PA200W BOARD]

| REF NO. | ORDER NO. | DESCRIPTION | M. | H/V LOCATION |
|---|---|---|---|---|
| R403 | 7030010960 | S.RES ERJ1TYJ 120U (12) | T | 97.2/90.7 |
| R404 | 7030010960 | S.RES ERJ1TYJ 120U (12) | T | 90.8/43.3 |
| R405 | 7030010960 | S.RES ERJ1TYJ 120U (12) | T | 94.5/43.3 |
| R406 | 7030010960 | S.RES ERJ1TYJ 120U (12) | T | 98.2/43.3 |
| R407 | 7310005210 | TRI VM5CK-PVB 20 k | | |
| R408 | 7030000420 | S.RES MCR10EZHJ 2.2 k | T | 116.3/96 |
| R409 | 7030000420 | S.RES MCR10EZHJ 2.2 k | T | 116.3/38 |
| R410 | 7310005210 | TRI VM5CK-PVB 20 k | | |
| R411 | 7030010520 | S.RES ERJ1TYJ 101U (100) | T | 107.6/93.9 |
| R412 | 7030010520 | S.RES ERJ1TYJ 101U (100) | T | 107.5/40.2 |
| R413 | 7030010520 | S.RES ERJ1TYJ 101U (100) | T | 111.3/93.9 |
| R414 | 7030010520 | S.RES ERJ1TYJ 101U (100) | T | 111.2/40.2 |
| R416 | 7070000890 | RES ERG3SJ 150 (15) | | |
| R418 | 7070001190 | RES ERG3SJ180 (18) | | |
| R420 | 7070000890 | RES ERG3SJ 150 (15) | | |
| R422 | 7070001190 | RES ERG3SJ180 (18) | | |
| R423 | 7030003460 | S.RES ERJ3GEYJ 152 V (1.5 k) | T | 95.9/98.4 |
| R424 | 7030003460 | S.RES ERJ3GEYJ 152 V (1.5 k) | T | 99.4/33.6 |
| R425 | 7310005200 | TRI VM5CK-PVB 2 k | | |
| R426 | 7310005200 | TRI VM5CK-PVB 2 k | | |
| R427 | 7070001200 | RES ERG3SJ100P (10) | | |
| R501 | 7070000890 | RES ERG3SJ 150 (15) | | |
| R502 | 7070000890 | RES ERG3SJ 150 (15) | | |
| R503 | 7030003500 | S.RES ERJ3GEYJ 332 V (3.3 k) | T | 171.8/16.7 |
| R504 | 7030003500 | S.RES ERJ3GEYJ 332 V (3.3 k) | T | 169.9/15.9 |
| R507 | 7030003500 | S.RES ERJ3GEYJ 332 V (3.3 k) | T | 139.1/17.9 |
| R508 | 7030003500 | S.RES ERJ3GEYJ 332 V (3.3 k) | T | 137.3/19.2 |
| R511 | 7070000890 | RES ERG3SJ 150 (15) | | |
| R512 | 7070000890 | RES ERG3SJ 150 (15) | | |
| R513 | 7070001000 | RES ERG3SJ 821 (820) | | |
| R514 | 7070001000 | RES ERG3SJ 821 (820) | | |
| R521 | 7030011160 | S.RES RL7520WT-R010-F | T | 165.2/20.2 |
| R522 | 7030011160 | S.RES RL7520WT-R010-F | T | 159.6/20.2 |
| R523 | 7030011160 | S.RES RL7520WT-R010-F | T | 154/20.2 |
| | | | | |
| C1 | 4030011600 | S.CER C1608 JB 1E 104K-T | T | 18.9/18 |
| C2 | 4030006880 | S.CER C1608 JB 1H 472K-T | T | 18.9/20.5 |
| C3 | 4030006880 | S.CER C1608 JB 1H 472K-T | T | 18.9/23 |
| C6 | 4030006880 | S.CER C1608 JB 1H 472K-T | T | 18.9/25.5 |
| C7 | 4030006900 | S.CER C1608 JB 1H 103K-T | T | 70/6.8 |
| C8 | 4030006880 | S.CER C1608 JB 1H 472K-T | T | 42.8/15.6 |
| C9 | 4030011600 | S.CER C1608 JB 1E 104K-T | T | 57.6/11.4 |
| C10 | 4510008520 | S.ELE EEE1CA470SP | T | 52/15.5 |
| C11 | 4030006900 | S.CER C1608 JB 1H 103K-T | T | 60.4/11.4 |
| C12 | 4510008520 | S.ELE EEE1CA470SP | T | 64.9/15.5 |
| C15 | 4030006880 | S.CER C1608 JB 1H 472K-T | T | 104.3/20.4 |
| C16 | 4030006880 | S.CER C1608 JB 1H 472K-T | T | 103/23.1 |
| C17 | 4510008550 | S.ELE EEE1HA010SR | T | 95.9/22.8 |
| C102 | 4030017810 | S.CER C1608 CH 1H 102J-T | T | 4.1/76.2 |
| C103 | 4030011600 | S.CER C1608 JB 1E 104K-T | T | 9.2/72.5 |
| C104 | 4030011600 | S.CER C1608 JB 1E 104K-T | T | 9.5/75.2 |
| C106 | 4030017320 | S.CER GRM21BB11H104KA11L | T | 2.2/67.7 |
| C107 | 4030011600 | S.CER C1608 JB 1E 104K-T | T | 9.2/70.9 |
| C108 | 4030017810 | S.CER C1608 CH 1H 102J-T | T | 9.2/69.6 |
| C109 | 4030017320 | S.CER GRM21BB11H104KA11L | T | 8.1/62.6 |
| C110 | 4030017810 | S.CER C1608 CH 1H 102J-T | T | 9/64.2 |
| C111 | 4030017810 | S.CER C1608 CH 1H 102J-T | T | 9/56.4 |
| C112 | 4030017320 | S.CER GRM21BB11H104KA11L | T | 8.7/54.8 |
| C113 | 4030011600 | S.CER C1608 JB 1E 104K-T | T | 5.3/102.4 |
| C114 | 4030011600 | S.CER C1608 JB 1E 104K-T | T | 13.9/60.6 |
| C201 | 4030017320 | S.CER GRM21BB11H104KA11L | T | 18.2/43.1 |
| C202 | 4030017810 | S.CER C1608 CH 1H 102J-T | T | 15.7/61.3 |
| C204 | 4030008490 | S.CER C2012 JB 1H 682K-T | T | 31.2/61.6 |
| C206 | 4030008700 | S.CER GRM21BB11H473KA01L | T | 29.3/61.6 |
| C207 | 4030008700 | S.CER GRM21BB11H473KA01L | T | 34.4/36.7 |
| C301 | 4030004760 | S.CER C2012 JF 1H 104Z-T | T | 49.4/45.5 |
| C303 | 4030011600 | S.CER C1608 JB 1E 104K-T | T | 43.4/35.4 |
| C305 | 4030004760 | S.CER C2012 JF 1H 104Z-T | T | 44.4/42.6 |
| C307 | 4030017810 | S.CER C1608 CH 1H 102J-T | T | 39.7/31.7 |
| C309 | 4030011600 | S.CER C1608 JB 1E 104K-T | T | 41.1/31.7 |
| C311 | 4030018750 | S.CER C3225 CH 2J 682K-T | T | 54.1/58.9 |
| C313 | 4030011600 | S.CER C1608 JB 1E 104K-T | T | 89.1/26.9 |
| C314 | 4510008050 | ELE 63 ME 220 CZ | | |
| C317 | 4030018790 | S.CER C3225 JB 2E 104K-T | T | 76.8/34 |
| C318 | 4030011600 | S.CER C1608 JB 1E 104K-T | T | 77.2/96.7 |
| C319 | 4030018790 | S.CER C3225 JB 2E 104K-T | T | 70.4/79 |
| C401 | 4030011790 | S.CER GRM55RF52A684ZD01L | T | 92.4/82.2 |
| C402 | 4030011790 | S.CER GRM55RF52A684ZD01L | T | 92.4/51.8 |
| C403 | 4030011600 | S.CER C1608 JB 1E 104K-T | T | 79.9/100.1 |
| C404 | 4030011600 | S.CER C1608 JB 1E 104K-T | T | 88.6/30.3 |
| C405 | 4030006900 | S.CER C1608 JB 1H 103K-T | T | 79.9/98.8 |
| C406 | 4030006900 | S.CER C1608 JB 1H 103K-T | T | 88.6/31.6 |
| C407 | 4030017810 | S.CER C1608 CH 1H 102J-T | T | 79.9/97.5 |
| C408 | 4030017810 | S.CER C1608 CH 1H 102J-T | T | 88.6/32.9 |
| C409 | 4030018790 | S.CER C3225 JB 2E 104K-T | T | 111.3/100.2 |
| C410 | 4030018790 | S.CER C3225 JB 2E 104K-T | T | 111.2/33.9 |
| C411 | 4030006880 | S.CER C1608 JB 1H 472K-T | T | 114.9/99.1 |
| C412 | 4030006880 | S.CER C1608 JB 1H 472K-T | T | 116.3/35 |
| C413 | 4030011600 | S.CER C1608 JB 1E 104K-T | T | 97.8/99.1 |
| C414 | 4030011600 | S.CER C1608 JB 1E 104K-T | T | 97.4/36.5 |
| C415 | 4030011790 | S.CER GRM55RF52A684ZD01L | T | 102.8/88.8 |

## [PA200W BOARD]

| REF NO. | ORDER NO. | DESCRIPTION | M. | H/V LOCATION |
|---|---|---|---|---|
| C416 | 4030011790 | S.CER GRM55RF52A684ZD01L | T | 103.8/49 |
| C417 | 4030018760 | S.CER C4532 CH 2A 104K-T | T | 190.2/82.6 |
| C418 | 4030018760 | S.CER C4532 CH 2A 104K-T | T | 193.9/82.6 |
| C419 | 4030018760 | S.CER C4532 CH 2A 104K-T | T | 190.2/53.4 |
| C420 | 4030018760 | S.CER C4532 CH 2A 104K-T | T | 193.9/53.4 |
| C501 | 4030018790 | S.CER C3225 JB 2E 104K-T | T | 183.8/32 |
| C502 | 4030018780 | S.CER C3225 JB 2J 473K-T | T | 180.4/32 |
| C503 | 4030018770 | S.CER C3216 CH 2J 102J-T | T | 177.3/32 |
| C504 | 4510006830 | ELE 63 ME 470CZ | | |
| C505 | 4510006830 | ELE 63 ME 470CZ | | |
| C506 | 4030006880 | S.CER C1608 JB 1H 472K-T | T | 173.7/15.9 |
| C507 | 4030006880 | S.CER C1608 JB 1H 472K-T | T | 137.2/17 |
| C510 | 4030018790 | S.CER C3225 JB 2E 104K-T | T | 170.2/13.6 |
| C511 | 4030018780 | S.CER C3225 JB 2J 473K-T | T | 170.2/10.6 |
| C512 | 4030018770 | S.CER C3216 CH 2J 102J-T | T | 169.9/7.2 |
| C513 | 4510008050 | ELE 63 ME 220 CZ | | |
| C514 | 4030011790 | S.CER GRM55RF52A684ZD01L | T | 164.8/6.7 |
| C515 | 4030011790 | S.CER GRM55RF52A684ZD01L | T | 148.4/6.6 |
| | | | | |
| J1 | 6510007020 | CNR TMP-J01X-V6 | | |
| J2 | 6510022311 | S.CNR B5B-PH-SM4-TB (LF) (SN) | T | 6/23 |
| J5 | 6510020421 | S.CNR S4B-PH-SM4-TB (LF) (SN) | T | 93/4.5 |
| J401 | 6510017920 | CNR 1811P342 | | |
| J402 | 6910001040 | CNR IPS-1136 | | |
| | | | | |
| W401 | 9025900670 | WIR 23/05/060/B21/W07 | | |
| W501 | 9040401001 | JMP 74/98/050/X98/X98 | | |
| | | | | |
| EP501 | 6910011330 | TER OT-009 M3 | | |
| EP502 | 6910011330 | TER OT-009 M3 | | |
| EP503 | 6910000640 | BEA FSRH090160RN000B | | |

## [DC-DC UNIT]

| REF NO. | ORDER NO. | DESCRIPTION | M. | H/V LOCATION |
|---|---|---|---|---|
| IC21 | 1180002510 | S.REG LM2673S-3.3 | T | 130/20.9 |
| IC41 | 1180002510 | S.REG LM2673S-3.3 | T | 97.6/94.7 |
| IC61 | 1180002520 | S.REG LM2673S-5.0 | T | 97.6/59.8 |
| IC81 | 1180002520 | S.REG LM2673S-5.0 | T | 38/13.5 |
| IC101 | 1180002500 | S.REG LM2673S-ADJ | T | 96.6/26.6 |
| IC121 | 1180002530 | S.REG LM2594M-12 | T | 128.6/69.2 |
| | | | | |
| Q141 | 1590003310 | S.TR DTD113ZK T146 | T | 7.8/95.4 |
| | | | | |
| D21 | 1750000960 | S.DIO RB081L-20 | T | 125.2/32.8 |
| D41 | 1750000960 | S.DIO RB081L-20 | T | 85.7/88.1 |
| D61 | 1750000960 | S.DIO RB081L-20 | T | 88.6/54.3 |
| D81 | 1750000960 | S.DIO RB081L-20 | T | 31.2/22 |
| D101 | 1750000960 | S.DIO RB081L-20 | T | 87.6/21.9 |
| D121 | 1710000840 | S.DIO 1SR154-400 TE25 | T | 145.3/70.6 |
| D122 | 1750001011 | S.DIO MBRD835LT4G | T | 120.6/82.8 |
| D123 | 1750000960 | S.DIO RB081L-20 | T | 132.6/86.1 |
| D141 | 1750000520 | S.DIO DAN222TL | T | 11.3/94.8 |
| | | | | |
| L21 | 6200003950 | S.COL HF50ACC 322513-T | T | 117.9/55.1 |
| L22 | 6200010891 | S.COL CDRH124NP-150MC | T | 115.5/34.2 |
| L23 | 6200010881 | S.COL CDRH124NP-330MC | T | 130/50.7 |
| L41 | 6200009790 | S.COL BLM31PG121SN1 | T | 63.2/81.3 |
| L42 | 6200010891 | S.COL CDRH124NP-150MC | T | 84.7/80.3 |
| L43 | 6200010881 | S.COL CDRH124NP-330MC | T | 68.3/94 |
| L44 | 6200009790 | S.COL BLM31PG121SN1 | T | 63.2/83.6 |
| L61 | 6200003950 | S.COL HF50ACC 322513-T | T | 62.9/46.6 |
| L62 | 6200010901 | S.COL CDRH104RNP-100NC | T | 80.4/45 |
| L63 | 6200010881 | S.COL CDRH124NP-330MC | T | 66.5/58 |
| L81 | 6200003950 | S.COL HF50ACC 322513-T | T | 27.4/47.8 |
| L82 | 6200010901 | S.COL CDRH104RNP-100NC | T | 22.7/32 |
| L83 | 6200010881 | S.COL CDRH124NP-330MC | T | 36.1/43.1 |
| L101 | 6200003950 | S.COL HF50ACC 322513-T | T | 62.9/16.6 |
| L102 | 6200010881 | S.COL CDRH124NP-330MC | T | 84.9/12.1 |
| L103 | 6190001191 | S.COL D10F-#A814AY-101K | T | 65.5/26.6 |
| L121 | 6190001640 | S.COL SLF12555T-101M1R1 | T | 119.3/72.3 |
| L122 | 6190001191 | S.COL D10F-#A814AY-101K | T | 141.6/80.9 |
| L141 | 6200001831 | S.COL NLV32T-100J | T | 10.5/99.4 |
| L142 | 6200010901 | S.COL CDRH104RNP-100NC | T | 97.3/109 |
| | | | | |
| R21 | 7030006091 | S.RES ERA3YED 822V (8.2 k) | T | 119.1/19.7 |
| R41 | 7030006091 | S.RES ERA3YED 822V (8.2 k) | T | 98.9/83.8 |
| R61 | 7030006091 | S.RES ERA3YED 822V (8.2 k) | T | 98.8/48.5 |

M.=Mounted side (T: Mounted on the Top side, B: Mounted on the Bottom side)
S.=Surface mount

## [DC-DC UNIT]

| REF NO. | ORDER NO. | DESCRIPTION | M. | H/V LOCATION |
|---|---|---|---|---|
| R81 | 7030006091 | S.RES ERA3YED 822V (8.2 k) | T | 27/12.2 |
| R101 | 7030009851 | S.RES ERA3YED 271V (270) | T | 102/17.9 |
| R102 | 7030007230 | S.RES ERA3YED 102V (1 k) | T | 102/20.8 |
| R103 | 7030006091 | S.RES ERA3YED 822V (8.2 k) | T | 97.9/15.7 |
| R121 | 7030003640 | S.RES ERJ3GEYJ 473 V (47 k) | T | 133.3/72.6 |
| R122 | 7030003640 | S.RES ERJ3GEYJ 473 V (47 k) | T | 132/71.8 |
| R141 | 7030008190 | S.RES ERJ12YJ330U (33) | T | 14.7/99 |
| C9 | 4510008910 | S.ELE EEEFC1C101P | T | 138.5/69.7 |
| C21 | 4030011600 | S.CER C1608 JB 1E 104K-T | T | 125.3/40.8 |
| C22 | 4510008610 | S.ELE 10SVP150MX | T | 131.1/38.1 |
| C23 | 4030011340 | S.CER C1608 CH 1H 471J-T | T | 119.1/17.1 |
| C24 | 4030004750 | S.CER C2012 JB 1H 103K-T | T | 119.7/23.7 |
| C25 | 4030005110 | S.CER C2012 JB 1E 473K-T | T | 125.3/27.5 |
| C26 | 4550006770 | S.TAN TEESVD2 1C 476M-12R | T | 132.1/30 |
| C27 | 4510008610 | S.ELE 10SVP150MX | T | 115.3/47.4 |
| C41 | 4030011600 | S.CER C1608 JB 1E 104K-T | T | 77.5/89.5 |
| C42 | 4510008610 | S.ELE 10SVP150MX | T | 80.8/95.2 |
| C43 | 4030011340 | S.CER C1608 CH 1H 471J-T | T | 101.4/83.8 |
| C44 | 4030004750 | S.CER C2012 JB 1H 103K-T | T | 94.8/84.1 |
| C45 | 4030005110 | S.CER C2012 JB 1E 473K-T | T | 91.4/90.6 |
| C46 | 4550007140 | S.TAN TEESVD 1C 107M12R | T | 87.6/96.4 |
| C47 | 4510008610 | S.ELE 10SVP150MX | T | 70.5/79.1 |
| C61 | 4030011600 | S.CER C1608 JB 1E 104K-T | T | 81.5/56 |
| C62 | 4510008610 | S.ELE 10SVP150MX | T | 77.3/60.9 |
| C63 | 4030011340 | S.CER C1608 CH 1H 471J-T | T | 101.4/48.5 |
| C64 | 4030004750 | S.CER C2012 JB 1H 103K-T | T | 94.8/49.1 |
| C65 | 4030011600 | S.CER C1608 JB 1E 104K-T | T | 91.1/55.4 |
| C66 | 4550006770 | S.TAN TEESVD2 1C 476M-12R | T | 85.6/61.7 |
| C67 | 4510008610 | S.ELE 10SVP150MX | T | 69.6/44 |
| C81 | 4030011600 | S.CER C1608 JB 1E 104K-T | T | 33.1/28.4 |
| C82 | 4510008610 | S.ELE 10SVP150MX | T | 37.9/32.4 |
| C83 | 4030011340 | S.CER C1608 CH 1H 471J-T | T | 26.9/9.7 |
| C84 | 4030004750 | S.CER C2012 JB 1H 103K-T | T | 27.7/16.1 |
| C85 | 4030011600 | S.CER C1608 JB 1E 104K-T | T | 33.4/19.8 |
| C86 | 4550006770 | S.TAN TEESVD2 1C 476M-12R | T | 38/25.1 |
| C87 | 4510008610 | S.ELE 10SVP150MX | T | 21.7/42.7 |
| C101 | 4030011600 | S.CER C1608 JB 1E 104K-T | T | 80.1/22.7 |
| C102 | 4510008610 | S.ELE 10SVP150MX | T | 75.7/27.3 |
| C103 | 4030011340 | S.CER C1608 CH 1H 471J-T | T | 100.4/15.6 |
| C104 | 4030004750 | S.CER C2012 JB 1H 103K-T | T | 93.8/16.2 |
| C105 | 4030005110 | S.CER C2012 JB 1E 473K-T | T | 90.1/22.5 |
| C106 | 4550006770 | S.TAN TEESVD2 1C 476M-12R | T | 83.8/28.2 |
| C107 | 4510008610 | S.ELE 10SVP150MX | T | 68.6/11.3 |
| C122 | 4030011600 | S.CER C1608 JB 1E 104K-T | T | 132/69.2 |
| C123 | 4510008940 | S.ELE EEEFC1V470P | T | 131.7/79.3 |
| C124 | 4030006880 | S.CER C1608 JB 1H 472K-T | T | 120.8/95.1 |
| C141 | 4030011600 | S.CER C1608 JB 1E 104K-T | T | 7.6/97.9 |
| RL142 | 6330001760 | RLY AW3023 | | |
| J2 | 6510003470 | CNR B11B-EH-S | | |
| J3 | 6510003430 | CNR B07B-EH-S | | |
| J4 | 6510003460 | CNR B10B-EH-S | | |
| J5 | 6510020421 | S.CNR S4B-PH-SM4-TB (LF) (SN) | T | 128.2/97.5 |
| W1 | 8900012780 | CBL OPC-1298 | | |

## [TUNER UNIT]

| REF NO. | ORDER NO. | DESCRIPTION | M. | H/V LOCATION |
|---|---|---|---|---|
| MF1 | 2710000780 | MTR MP24Z | | |
| MF2 | 2710000780 | MTR MP24Z | | |
| MF3 | 2710000470 | FAN MF60B-12H901 | | |
| W1 | 8900012900 | CBL OPC-1345 | | |
| W2 | 8900012900 | CBL OPC-1345 | | |
| W3 | 8900009410 | CBL OPC-927 (P=1, N=24, L=100) | | |
| W51 | 9025900490 | WIR 23/00/230/B11/B09 | | |

## [CTRL BOARD]

| REF NO. | ORDER NO. | DESCRIPTION | M. | H/V LOCATION |
|---|---|---|---|---|
| IC1 | 1140004120 | S.IC M38022M2-138FP | T | 65.7/81.8 |
| IC2 | 1130010390 | S.IC HN58X2416TI | T | 54/86.9 |
| IC3 | 1130003921 | S.IC TC4S69F (TE85R,F) | T | 55.9/58.2 |
| IC4 | 1180001071 | S.IC TA7805F (TE16L,Q) | B | 63/57.7 |
| IC5 | 1130009691 | S.IC TC74HCT7007AF (F) | B | 92.5/91.6 |
| IC6 | 1130006441 | S.IC TC7S08F (TE85R,F) | T | 81.7/70.3 |
| IC51 | 1130011530 | S.IC CD74HC4094M96 | T | 42.2/72.4 |
| IC52 | 1130007690 | S.IC BU4066BCF-E2 | B | 12.5/76.8 |
| IC55 | 1130011530 | S.IC CD74HC4094M96 | B | 100.2/76.1 |
| IC56 | 1130011530 | S.IC CD74HC4094M96 | B | 114.3/76.1 |
| IC57 | 1160000131 | S.IC TD62783AFG (S.EL) | T | 99.6/73.1 |
| IC58 | 1160000131 | S.IC TD62783AFG (S.EL) | T | 113.7/73.1 |
| IC101 | 1110000960 | S.IC NJM4558M-TE1 | T | 19.4/37.8 |
| IC151 | 1120002301 | S.IC TC74AC04F (F) | B | 35.3/44.3 |
| IC153 | 1130012011 | S.IC TC7SZ32F (TE85L,F) | T | 31.2/47.3 |
| IC154 | 1130012011 | S.IC TC7SZ32F (TE85L,F) | T | 42.4/45.8 |
| IC155 | 1130012011 | S.IC TC7SZ32F (TE85L,F) | T | 36/47.5 |
| IC156 | 1130012020 | S.IC TC74ACT112F (EL) | T | 38.4/56.5 |
| IC201 | 1110000960 | S.IC NJM4558M-TE1 | T | 19/54.7 |
| IC301 | 1110002690 | S.IC NJM2903M-TE1 | T | 73.4/59 |
| IC401 | 1160000131 | S.IC TD62783AFG (S.EL) | T | 13.6/86.1 |
| IC402 | 1160000131 | S.IC TD62783AFG (S.EL) | T | 31.6/84.7 |
| Q1 | 1590001330 | S.TR DTA114EUA T106 | T | 78.5/75.2 |
| Q2 | 1590000680 | S.TR DTC114EUA T106 | T | 77.8/71.2 |
| Q3 | 1590000680 | S.TR DTC114EUA T106 | T | 128.4/74.5 |
| Q4 | 1590000680 | S.TR DTC114EUA T106 | T | 128.4/77 |
| Q5 | 1590000680 | S.TR DTC114EUA T106 | T | 128.4/81.3 |
| Q6 | 1590000680 | S.TR DTC114EUA T106 | T | 128.4/83.8 |
| Q7 | 1590000680 | S.TR DTC114EUA T106 | T | 128.4/88.5 |
| Q8 | 1590000680 | S.TR DTC114EUA T106 | T | 128.4/91 |
| Q9 | 1590000680 | S.TR DTC114EUA T106 | T | 128.4/95.7 |
| Q10 | 1590000680 | S.TR DTC114EUA T106 | T | 128.4/100.5 |
| Q11 | 1590000680 | S.TR DTC114EUA T106 | B | 85.7/99.8 |
| Q51 | 1590000680 | S.TR DTC114EUA T106 | T | 6.1/78.6 |
| Q52 | 1590000680 | S.TR DTC114EUA T106 | T | 12.5/78.6 |
| Q53 | 1590000680 | S.TR DTC114EUA T106 | B | 6.6/72.8 |
| Q54 | 1560001260 | S.FET 2SK3018 T106 | B | 121.2/80.2 |
| Q55 | 1590000680 | S.TR DTC114EUA T106 | B | 130.2/68.9 |
| Q59 | 1590000680 | S.TR DTC114EUA T106 | T | 56.8/69.5 |
| Q201 | 1560000871 | S.FET 2SK515-T1B-A (X33) | T | 52.6/43 |
| Q251 | 1590000680 | S.TR DTC114EUA T106 | T | 74.2/34.9 |
| D1 | 1730000411 | S.ZEN RD5.1M-T2B-A B2 | T | 63.4/58.4 |
| D2 | 1710000780 | S.DIO MA114 (TX) | T | 67.7/55.9 |
| D3 | 1750000201 | S.DIO 1SS319 (TE85R,F) | B | 129.5/98.1 |
| D4 | 1750000201 | S.DIO 1SS319 (TE85R,F) | B | 129.5/90 |
| D5 | 1750000201 | S.DIO 1SS319 (TE85R,F) | B | 129.5/82.8 |
| D6 | 1750000201 | S.DIO 1SS319 (TE85R,F) | B | 129.5/76 |
| D7 | 1730000031 | S.ZEN RD5.6M-T2B-A B2 | T | 63.6/54.9 |
| D101 | 1790000491 | S.DIO HSM88ASTR-E | T | 14.7/24.3 |
| D102 | 1790000491 | S.DIO HSM88ASTR-E | T | 25.6/29.5 |
| D103 | 1750000201 | S.DIO 1SS319 (TE85R,F) | T | 19.3/42.1 |
| D151 | 1790000491 | S.DIO HSM88ASTR-E | T | 32/38.2 |
| D152 | 1790000491 | S.DIO HSM88ASTR-E | T | 39.4/38.2 |
| D153 | 1790000491 | S.DIO HSM88ASTR-E | T | 28.4/57.2 |
| D154 | 1790000491 | S.DIO HSM88ASTR-E | T | 29.6/53.4 |
| D201 | 1790000491 | S.DIO HSM88ASTR-E | T | 57.6/37.2 |
| D202 | 1790000491 | S.DIO HSM88ASTR-E | T | 48.5/37.1 |
| D203 | 1750000201 | S.DIO 1SS319 (TE85R,F) | T | 18/60.9 |
| D251 | 1750000271 | S.DIO 1SS301 (TE85R,F) | T | 72.1/36.5 |
| D301 | 1790000491 | S.DIO HSM88ASTR-E | T | 81.5/58.3 |
| D302 | 1790000491 | S.DIO HSM88ASTR-E | T | 88.4/59.6 |
| X1 | 6050009890 | S.XTL CR-569 (6.144 MHz) | T | 83.2/79.5 |
| L1 | 6200003261 | S.COL NLV32T-101J | T | 51.1/76.5 |
| L2 | 6200003261 | S.COL NLV32T-101J | T | 54.5/77.8 |

M.=Mounted side (T: Mounted on the Top side, B: Mounted on the Bottom side)
S.=Surface mount

## [CTRL BOARD]

| REF NO. | ORDER NO. | DESCRIPTION | M. | H/V LOCATION |
|---|---|---|---|---|
| L4 | 2040000490 | COL EXC-ELDR25C | | |
| L5 | 6200005131 | S.COL NLC453232T-101K-PF | T | 121.6/100.3 |
| L6 | 6200003590 | S.COL EXCCL3225U1 | T | 109.3/91.1 |
| L7 | 6200003590 | S.COL EXCCL3225U1 | T | 106.3/91.2 |
| L8 | 6200003590 | S.COL EXCCL3225U1 | T | 103.3/91.1 |
| L9 | 6200003950 | S.COL HF50ACC 322513-T | B | 92/101 |
| L51 | 6200003261 | S.COL NLV32T-101J | T | 106.3/86.9 |
| L52 | 6200005131 | S.COL NLC453232T-101K-PF | T | 114.9/88.1 |
| L101 | 6140004410 | COL LR-502 | | |
| L102 | 6200001831 | S.COL NLV32T-100J | T | 20.9/66.5 |
| L103 | 6200003261 | S.COL NLV32T-101J | T | 15.2/66.4 |
| L151 | 6140004410 | COL LR-502 | | |
| L152 | 6200001831 | S.COL NLV32T-100J | T | 41.4/63 |
| L201 | 6140004410 | COL LR-502 | | |
| L202 | 6180003300 | COL T6-222J (2.2M) | | |
| L301 | 6140004410 | COL LR-502 | | |
| L302 | 6200003261 | S.COL NLV32T-101J | B | 69.4/61.2 |
| L401 | 6200003950 | S.COL HF50ACC 322513-T | T | 26.4/101.5 |
| L402 | 6200003950 | S.COL HF50ACC 322513-T | T | 18.5/101.5 |
| R2 | 7030003680 | S.RES ERJ3GEYJ 104 V (100 k) | T | 63/71 |
| R3 | 7030003680 | S.RES ERJ3GEYJ 104 V (100 k) | T | 64.3/71 |
| R4 | 7030003680 | S.RES ERJ3GEYJ 104 V (100 k) | T | 65.6/71 |
| R5 | 7030003680 | S.RES ERJ3GEYJ 104 V (100 k) | T | 66.9/71 |
| R6 | 7030003560 | S.RES ERJ3GEYJ 103 V (10 k) | T | 74.7/71 |
| R7 | 7030003440 | S.RES ERJ3GEYJ 102 V (1 k) | T | 73.4/71 |
| R8 | 7030003680 | S.RES ERJ3GEYJ 104 V (100 k) | T | 55.4/72.8 |
| R9 | 7030003680 | S.RES ERJ3GEYJ 104 V (100 k) | T | 54.7/74.7 |
| R10 | 7030003680 | S.RES ERJ3GEYJ 104 V (100 k) | T | 57.3/72.9 |
| R11 | 7030003680 | S.RES ERJ3GEYJ 104 V (100 k) | T | 53.4/74.7 |
| R12 | 7030003440 | S.RES ERJ3GEYJ 102 V (1 k) | T | 78.3/83.9 |
| R13 | 7030003680 | S.RES ERJ3GEYJ 104 V (100 k) | T | 76.6/75.6 |
| R14 | 7030003680 | S.RES ERJ3GEYJ 104 V (100 k) | T | 78.5/78.2 |
| R15 | 7030003440 | S.RES ERJ3GEYJ 102 V (1 k) | T | 55.6/60.7 |
| R16 | 7030003320 | S.RES ERJ3GEYJ 101 V (100) | T | 54.8/55.2 |
| R17 | 7030003560 | S.RES ERJ3GEYJ 103 V (10 k) | T | 54.1/82.2 |
| R18 | 7030003560 | S.RES ERJ3GEYJ 103 V (10 k) | T | 54.1/80.9 |
| R19 | 7030003680 | S.RES ERJ3GEYJ 104 V (100 k) | T | 58.3/58.2 |
| R20 | 7030003570 | S.RES ERJ3GEYJ 123 V (12 k) | T | 59.6/60.6 |
| R21 | 7030003650 | S.RES ERJ3GEYJ 563 V (56 k) | T | 59.6/58.2 |
| R22 | 7030003450 | S.RES ERJ3GEYJ 122 V (1.2 k) | T | 66.3/58.5 |
| R23 | 7030003560 | S.RES ERJ3GEYJ 103 V (10 k) | B | 105.1/100 |
| R24 | 7030003440 | S.RES ERJ3GEYJ 102 V (1 k) | B | 102.9/98.8 |
| R25 | 7030003380 | S.RES ERJ3GEYJ 331 V (330) | B | 126/99.1 |
| R26 | 7030003380 | S.RES ERJ3GEYJ 331 V (330) | B | 126/97.1 |
| R27 | 7030003380 | S.RES ERJ3GEYJ 331 V (330) | B | 126/91 |
| R28 | 7030003380 | S.RES ERJ3GEYJ 331 V (330) | B | 126/89 |
| R29 | 7030003380 | S.RES ERJ3GEYJ 331 V (330) | B | 126/83.8 |
| R30 | 7030003380 | S.RES ERJ3GEYJ 331 V (330) | B | 126/81.8 |
| R31 | 7030003380 | S.RES ERJ3GEYJ 331 V (330) | B | 126/77 |
| R32 | 7030003380 | S.RES ERJ3GEYJ 331 V (330) | B | 126/75 |
| R40 | 7030003440 | S.RES ERJ3GEYJ 102 V (1 k) | T | 61.2/99.9 |
| R42 | 7030003860 | S.RES ERJ3GE JPW V | T | 60.4/71 |
| R43 | 7030003860 | S.RES ERJ3GE JPW V | T | 60.7/69 |
| R44 | 7030003860 | S.RES ERJ3GE JPW V | T | 68.2/71 |
| R45 | 7030003860 | S.RES ERJ3GE JPW V | T | 65.7/68.5 |
| R46 | 7030003860 | S.RES ERJ3GE JPW V | T | 70.6/68.9 |
| R51 | 7030003440 | S.RES ERJ3GEYJ 102 V (1 k) | B | 35.8/80.1 |
| R52 | 7030003440 | S.RES ERJ3GEYJ 102 V (1 k) | B | 34.3/80.1 |
| R53 | 7030003440 | S.RES ERJ3GEYJ 102 V (1 k) | B | 32.8/80.1 |
| R54 | 7030003440 | S.RES ERJ3GEYJ 102 V (1 k) | B | 31.2/80.1 |
| R55 | 7030003440 | S.RES ERJ3GEYJ 102 V (1 k) | B | 29.6/80.1 |
| R56 | 7030003440 | S.RES ERJ3GEYJ 102 V (1 k) | B | 28/80.1 |
| R57 | 7030003440 | S.RES ERJ3GEYJ 102 V (1 k) | B | 26.4/80.1 |
| R58 | 7030003440 | S.RES ERJ3GEYJ 102 V (1 k) | B | 24.8/80.1 |
| R59 | 7030003440 | S.RES ERJ3GEYJ 102 V (1 k) | T | 18.3/78.7 |
| R60 | 7030003440 | S.RES ERJ3GEYJ 102 V (1 k) | T | 17/76 |
| R61 | 7030003440 | S.RES ERJ3GEYJ 102 V (1 k) | T | 15.7/76 |
| R62 | 7030003440 | S.RES ERJ3GEYJ 102 V (1 k) | T | 14.4/78.7 |
| R63 | 7030003440 | S.RES ERJ3GEYJ 102 V (1 k) | T | 10.6/78.7 |
| R64 | 7030003440 | S.RES ERJ3GEYJ 102 V (1 k) | T | 9.3/74.8 |
| R65 | 7030003440 | S.RES ERJ3GEYJ 102 V (1 k) | T | 8/74.8 |
| R66 | 7030003520 | S.RES ERJ3GEYJ 472 V (4.7 k) | B | 15.6/81.6 |
| R67 | 7030003200 | S.RES ERJ3GEYJ 100 V (10) | T | 99.8/90.4 |
| R68 | 7030003200 | S.RES ERJ3GEYJ 100 V (10) | T | 98.5/90.4 |
| R69 | 7030003200 | S.RES ERJ3GEYJ 100 V (10) | T | 97.2/90.4 |
| R70 | 7030004040 | S.RES ERJ3GEYJ 4R7 V (4.7) | T | 104.8/65.9 |
| R71 | 7030004040 | S.RES ERJ3GEYJ 4R7 V (4.7) | T | 103.5/65.9 |
| R72 | 7030004040 | S.RES ERJ3GEYJ 4R7 V (4.7) | T | 102.2/65.9 |
| R73 | 7030004040 | S.RES ERJ3GEYJ 4R7 V (4.7) | T | 100.9/65.9 |
| R74 | 7030004040 | S.RES ERJ3GEYJ 4R7 V (4.7) | T | 99.6/65.9 |
| R75 | 7030004040 | S.RES ERJ3GEYJ 4R7 V (4.7) | T | 98.3/65.9 |
| R76 | 7030004040 | S.RES ERJ3GEYJ 4R7 V (4.7) | T | 97/65.9 |
| R77 | 7030004040 | S.RES ERJ3GEYJ 4R7 V (4.7) | T | 95.7/65.9 |
| R78 | 7030004040 | S.RES ERJ3GEYJ 4R7 V (4.7) | B | 120.1/64.6 |
| R84 | 7030004040 | S.RES ERJ3GEYJ 4R7 V (4.7) | B | 110.5/64.6 |
| R85 | 7030004040 | S.RES ERJ3GEYJ 4R7 V (4.7) | B | 108.9/64.6 |
| R86 | 7030003560 | S.RES ERJ3GEYJ 103 V (10 k) | B | 116.1/83.6 |
| R87 | 7030003860 | S.RES ERJ3GE JPW V | T | 32.5/76 |
| R88 | 7030003860 | S.RES ERJ3GE JPW V | T | 31.2/76 |
| R89 | 7030003860 | S.RES ERJ3GE JPW V | T | 29.9/76 |

## [CTRL BOARD]

| REF NO. | ORDER NO. | DESCRIPTION | M. | H/V LOCATION |
|---|---|---|---|---|
| R90 | 7030003860 | S.RES ERJ3GE JPW V | T | 28.6/76 |
| R91 | 7030003860 | S.RES ERJ3GE JPW V | T | 27.3/76 |
| R92 | 7030003860 | S.RES ERJ3GE JPW V | T | 26/76 |
| R95 | 7030003860 | S.RES ERJ3GE JPW V | T | 15.7/78.7 |
| R97 | 7030003860 | S.RES ERJ3GE JPW V | T | 8/78.7 |
| R101 | 7030010950 | S.RES ERJ1TYJ 100U (10) | T | 18.6/29.5 |
| R102 | 7030010950 | S.RES ERJ1TYJ 100U (10) | T | 22.3/29.5 |
| R103 | 7030003560 | S.RES ERJ3GEYJ 103 V (10 k) | T | 12.2/34.7 |
| R104 | 7030003560 | S.RES ERJ3GEYJ 103 V (10 k) | T | 27.6/34.9 |
| R105 | 7030003720 | S.RES ERJ3GEYJ 224 V (220 k) | T | 12.2/37.3 |
| R106 | 7030003720 | S.RES ERJ3GEYJ 224 V (220 k) | T | 25/36.7 |
| R107 | 7030003660 | S.RES ERJ3GEYJ 683 V (68 k) | T | 14.1/36.5 |
| R108 | 7030003660 | S.RES ERJ3GEYJ 683 V (68 k) | T | 23.2/34.8 |
| R109 | 7030003720 | S.RES ERJ3GEYJ 224 V (220 k) | T | 13.3/38.7 |
| R110 | 7030003720 | S.RES ERJ3GEYJ 224 V (220 k) | T | 25/37.9 |
| R111 | 7030009340 | S.RES ERJ3GEYJ 275V (2.7 M) | T | 13.7/40.6 |
| R112 | 7030003810 | S.RES ERJ3GEYJ 125 V (1.2 M) | T | 25/39.1 |
| R113 | 7030003440 | S.RES ERJ3GEYJ 102 V (1 k) | T | 15/41.8 |
| R114 | 7030003440 | S.RES ERJ3GEYJ 102 V (1 k) | T | 24.25/40.95 |
| R115 | 7030009340 | S.RES ERJ3GEYJ 275V (2.7 M) | T | 12.4/40.6 |
| R118 | 7030003860 | S.RES ERJ3GE JPW V | T | 12.6/25.1 |
| R119 | 7030003860 | S.RES ERJ3GE JPW V | T | 35.8/41.9 |
| R151 | 7030007190 | S.RES ERJ12YJ220U (22) | T | 37.6/27.2 |
| R152 | 7030010620 | S.RES ERJ12YJ180U (18) | B | 38.1/26.8 |
| R153 | 7030007190 | S.RES ERJ12YJ220U (22) | T | 37.6/31.8 |
| R154 | 7030010620 | S.RES ERJ12YJ180U (18) | B | 38.1/31.8 |
| R155 | 7030003320 | S.RES ERJ3GEYJ 101 V (100) | T | 37/39.6 |
| R157 | 7030003320 | S.RES ERJ3GEYJ 101 V (100) | T | 30.3/40.1 |
| R158 | 7030003560 | S.RES ERJ3GEYJ 103 V (10 k) | T | 31.8/41.5 |
| R159 | 7030003560 | S.RES ERJ3GEYJ 103 V (10 k) | T | 38.4/41.5 |
| R160 | 7030003280 | S.RES ERJ3GEYJ 470 V (47) | T | 30/42.3 |
| R161 | 7030003280 | S.RES ERJ3GEYJ 470 V (47) | T | 39.7/43 |
| R162 | 7030003440 | S.RES ERJ3GEYJ 102 V (1 k) | T | 30.9/44.9 |
| R163 | 7030003440 | S.RES ERJ3GEYJ 102 V (1 k) | T | 42/43.3 |
| R164 | 7030003280 | S.RES ERJ3GEYJ 470 V (47) | T | 33.6/47.7 |
| R165 | 7030003280 | S.RES ERJ3GEYJ 470 V (47) | T | 39.2/46.4 |
| R166 | 7030003440 | S.RES ERJ3GEYJ 102 V (1 k) | T | 34.3/44.7 |
| R167 | 7030003440 | S.RES ERJ3GEYJ 102 V (1 k) | T | 39.2/45.1 |
| R168 | 7030003280 | S.RES ERJ3GEYJ 470 V (47) | T | 38.8/49.8 |
| R169 | 7030003440 | S.RES ERJ3GEYJ 102 V (1 k) | T | 38.8/51.1 |
| R170 | 7030003280 | S.RES ERJ3GEYJ 470 V (47) | T | 31.5/58.2 |
| R171 | 7030003280 | S.RES ERJ3GEYJ 470 V (47) | T | 31.5/56.9 |
| R172 | 7030003480 | S.RES ERJ3GEYJ 222 V (2.2 k) | T | 32/53.7 |
| R173 | 7030003500 | S.RES ERJ3GEYJ 332 V (3.3 k) | T | 27.2/54.9 |
| R174 | 7030003360 | S.RES ERJ3GEYJ 221 V (220) | T | 27.2/52.3 |
| R201 | 7030010420 | S.RES ERJ1TYJ 560U (56) | T | 49/29.7 |
| R202 | 7030010420 | S.RES ERJ1TYJ 560U (56) | B | 49.3/29.4 |
| R203 | 7030010420 | S.RES ERJ1TYJ 560U (56) | T | 49/33.7 |
| R204 | 7030010420 | S.RES ERJ1TYJ 560U (56) | B | 49.3/34 |
| R205 | 7030003560 | S.RES ERJ3GEYJ 103 V (10 k) | T | 52.3/45.4 |
| R206 | 7030003560 | S.RES ERJ3GEYJ 103 V (10 k) | T | 57.4/41.5 |
| R207 | 7030003800 | S.RES ERJ3GEYJ 105 V (1 M) | T | 50.1/41.9 |
| R208 | 7030003560 | S.RES ERJ3GEYJ 103 V (10 k) | T | 54.8/42.6 |
| R209 | 7030003520 | S.RES ERJ3GEYJ 472 V (4.7 k) | T | 54.8/40 |
| R210 | 7030003440 | S.RES ERJ3GEYJ 102 V (1 k) | T | 56.1/42.7 |
| R211 | 7030003480 | S.RES ERJ3GEYJ 222 V (2.2 k) | T | 13.1/49.4 |
| R212 | 7030003560 | S.RES ERJ3GEYJ 103 V (10 k) | T | 25.1/49.4 |
| R213 | 7030005331 | S.RES ERA3YED 562V (5.6 k) | T | 17.8/49.9 |
| R214 | 7030005331 | S.RES ERA3YED 562V (5.6 k) | T | 16.5/49.9 |
| R215 | 7030005871 | S.RES ERA3YKD 104V (100 k) | T | 14/53 |
| R216 | 7030008121 | S.RES ERA3YED 682V (6.8 k) | T | 20.6/50 |
| R217 | 7030008121 | S.RES ERA3YED 682V (6.8 k) | T | 22.3/48.1 |
| R218 | 7030005871 | S.RES ERA3YKD 104V (100 k) | T | 23.8/52 |
| R221 | 7030003670 | S.RES ERJ3GEYJ 823 V (82 k) | B | 17.1/57 |
| R222 | 7030003680 | S.RES ERJ3GEYJ 104 V (100 k) | T | 20.9/51.3 |
| R223 | 7030003820 | S.RES ERJ3GEYJ 155 V (1.5 M) | T | 14/55.8 |
| R224 | 7030003820 | S.RES ERJ3GEYJ 155 V (1.5 M) | T | 23.8/54.6 |
| R225 | 7030003560 | S.RES ERJ3GEYJ 103 V (10 k) | T | 14/61.4 |
| R226 | 7030003560 | S.RES ERJ3GEYJ 103 V (10 k) | T | 21.9/61.4 |
| R227 | 7030003560 | S.RES ERJ3GEYJ 103 V (10 k) | T | 14.7/63.4 |
| R228 | 7030003560 | S.RES ERJ3GEYJ 103 V (10 k) | T | 21.3/63.4 |
| R252 | 7030000230 | S.RES MCR10EZHJ 56 | T | 70.8/31.9 |
| R253 | 7030000230 | S.RES MCR10EZHJ 56 | T | 69.9/35.2 |
| R254 | 7030000230 | S.RES MCR10EZHJ 56 | T | 70.8/38.7 |
| R255 | 7030000220 | S.RES MCR10EZHJ 47 | T | 72.2/40.8 |
| R256 | 7030000230 | S.RES MCR10EZHJ 56 | T | 72.4/31 |
| R301 | 7030003560 | S.RES ERJ3GEYJ 103 V (10 k) | T | 83.7/57.6 |
| R302 | 7030003560 | S.RES ERJ3GEYJ 103 V (10 k) | T | 81.9/61.2 |
| R303 | 7030010910 | S.RES ERJ1TYJ 150U (15) | B | 90.1/60.7 |
| R304 | 7030003560 | S.RES ERJ3GEYJ 103 V (10 k) | T | 85.5/62 |
| R305 | 7030003720 | S.RES ERJ3GEYJ 224 V (220 k) | T | 80.6/61.2 |
| R306 | 7030003660 | S.RES ERJ3GEYJ 683 V (68 k) | T | 78.7/57.2 |
| R307 | 7030003660 | S.RES ERJ3GEYJ 683 V (68 k) | T | 79.2/59.7 |
| R308 | 7030003840 | S.RES ERJ3GEYJ 225 V (2.2 M) | B | 76.5/58.3 |
| R309 | 7030003720 | S.RES ERJ3GEYJ 224 V (220 k) | T | 76.1/53.9 |
| R310 | 7030003840 | S.RES ERJ3GEYJ 225 V (2.2 M) | T | 73.4/54 |
| R311 | 7030003440 | S.RES ERJ3GEYJ 102 V (1 k) | T | 76/55.5 |
| R312 | 7030003560 | S.RES ERJ3GEYJ 103 V (10 k) | T | 73.4/55.5 |
| R313 | 7030003700 | S.RES ERJ3GEYJ 154 V (150 k) | T | 78.5/61.6 |
| R345 | 7030003560 | S.RES ERJ3GEYJ 103 V (10 k) | T | 88.3/83.7 |
| R401 | 7030004040 | S.RES ERJ3GEYJ 4R7 V (4.7) | T | 17.5/93.4 |
| R402 | 7030004040 | S.RES ERJ3GEYJ 4R7 V (4.7) | T | 16.2/93.4 |

M.=Mounted side (T: Mounted on the Top side, B: Mounted on the Bottom side)
S.=Surface mount

## [CTRL BOARD]

| REF NO. | ORDER NO. | DESCRIPTION | M. | H/V LOCATION |
|---|---|---|---|---|
| R403 | 7030004040 | S.RES ERJ3GEYJ 4R7 V (4.7) | T | 14.9/93.4 |
| R404 | 7030004040 | S.RES ERJ3GEYJ 4R7 V (4.7) | T | 13.6/93.4 |
| R405 | 7030004040 | S.RES ERJ3GEYJ 4R7 V (4.7) | T | 12.3/93.4 |
| R406 | 7030004040 | S.RES ERJ3GEYJ 4R7 V (4.7) | T | 11/93.4 |
| R407 | 7030004040 | S.RES ERJ3GEYJ 4R7 V (4.7) | T | 9.7/93.4 |
| R408 | 7030004040 | S.RES ERJ3GEYJ 4R7 V (4.7) | T | 8.4/93.4 |
| R409 | 7030004040 | S.RES ERJ3GEYJ 4R7 V (4.7) | B | 36.6/86.7 |
| R410 | 7030004040 | S.RES ERJ3GEYJ 4R7 V (4.7) | B | 35.1/86.7 |
| R411 | 7030004040 | S.RES ERJ3GEYJ 4R7 V (4.7) | B | 33.6/86.7 |
| R412 | 7030004040 | S.RES ERJ3GEYJ 4R7 V (4.7) | B | 32/86.7 |
| R413 | 7030004040 | S.RES ERJ3GEYJ 4R7 V (4.7) | B | 30.4/86.7 |
| R414 | 7030004040 | S.RES ERJ3GEYJ 4R7 V (4.7) | B | 28.8/86.7 |
| R415 | 7030004040 | S.RES ERJ3GEYJ 4R7 V (4.7) | B | 27.2/86.7 |
| R416 | 7030004040 | S.RES ERJ3GEYJ 4R7 V (4.7) | B | 25.6/86.7 |
| R417 | 7030003440 | S.RES ERJ3GEYJ 102 V (1 k) | B | 31.3/98.5 |
| R418 | 7030003440 | S.RES ERJ3GEYJ 102 V (1 k) | B | 44.8/98.5 |
| R419 | 7030003440 | S.RES ERJ3GEYJ 102 V (1 k) | B | 32.9/98.5 |
| R420 | 7030003440 | S.RES ERJ3GEYJ 102 V (1 k) | B | 46.4/98.5 |
| R421 | 7030003440 | S.RES ERJ3GEYJ 102 V (1 k) | B | 34.5/98.5 |
| R422 | 7030003440 | S.RES ERJ3GEYJ 102 V (1 k) | B | 48/98.5 |
| R423 | 7030003440 | S.RES ERJ3GEYJ 102 V (1 k) | B | 36.1/98.5 |
| R424 | 7030003440 | S.RES ERJ3GEYJ 102 V (1 k) | B | 49.6/98.5 |
| R425 | 7030003440 | S.RES ERJ3GEYJ 102 V (1 k) | B | 37.7/98.5 |
| R426 | 7030003440 | S.RES ERJ3GEYJ 102 V (1 k) | B | 51.2/98.5 |
| R427 | 7030003440 | S.RES ERJ3GEYJ 102 V (1 k) | B | 39.3/98.5 |
| R428 | 7030003440 | S.RES ERJ3GEYJ 102 V (1 k) | B | 52.8/98.5 |
| R429 | 7030003440 | S.RES ERJ3GEYJ 102 V (1 k) | B | 40.9/98.5 |
| R430 | 7030003440 | S.RES ERJ3GEYJ 102 V (1 k) | B | 54.4/98.5 |
| R431 | 7030003440 | S.RES ERJ3GEYJ 102 V (1 k) | B | 42.5/98.5 |
| R432 | 7030003440 | S.RES ERJ3GEYJ 102 V (1 k) | B | 56/98.5 |
| | | | | |
| C1 | 4510008540 | S.ELE EEE1CA100SR | T | 42.6/80.3 |
| C2 | 4030011600 | S.CER C1608 JB 1E 104K-T | T | 45.8/82.3 |
| C3 | 4030006880 | S.CER C1608 JB 1H 472K-T | B | 89.5/100 |
| C4 | 4030006900 | S.CER C1608 JB 1H 103K-T | T | 56/74.7 |
| C5 | 4030006900 | S.CER C1608 JB 1H 103K-T | T | 58.6/72.9 |
| C6 | 4030006880 | S.CER C1608 JB 1H 472K-T | T | 74.6/74.7 |
| C7 | 4030017810 | S.CER C1608 CH 1H 102J-T | T | 75.3/76.6 |
| C8 | 4030011600 | S.CER C1608 JB 1E 104K-T | T | 56/81.3 |
| C9 | 4030009990 | S.CER C1608 CH 1H 200J-T | T | 75.3/80.5 |
| C10 | 4030011600 | S.CER C1608 JB 1E 104K-T | T | 51.7/79.8 |
| C11 | 4030006880 | S.CER C1608 JB 1H 472K-T | T | 76.6/78.2 |
| C12 | 4030009990 | S.CER C1608 CH 1H 200J-T | T | 76.6/81.5 |
| C13 | 4510008870 | S.ELE EEE1AA471UP | T | 48.5/56.6 |
| C14 | 4030011600 | S.CER C1608 JB 1E 104K-T | T | 60.7/55.3 |
| C15 | 4030011600 | S.CER C1608 JB 1E 104K-T | T | 67.3/53.7 |
| C16 | 4510008500 | S.ELE EEE1CA101WP | T | 66.6/48.8 |
| C17 | 4510008550 | S.ELE EEE1HA010SR | T | 133.3/100.5 |
| C18 | 4510008550 | S.ELE EEE1HA010SR | T | 133.3/95.7 |
| C19 | 4510008550 | S.ELE EEE1HA010SR | T | 138.4/91.9 |
| C20 | 4510008550 | S.ELE EEE1HA010SR | T | 133.3/89.7 |
| C21 | 4510008550 | S.ELE EEE1HA010SR | T | 138.4/85.3 |
| C22 | 4510008550 | S.ELE EEE1HA010SR | T | 133.3/83.1 |
| C23 | 4510008550 | S.ELE EEE1HA010SR | T | 138.4/78.6 |
| C24 | 4510008550 | S.ELE EEE1HA010SR | T | 133.3/76.5 |
| C25 | 4030011600 | S.CER C1608 JB 1E 104K-T | T | 53.6/57.7 |
| C26 | 4030006880 | S.CER C1608 JB 1H 472K-T | T | 61/58.2 |
| C38 | 4030011600 | S.CER C1608 JB 1E 104K-T | T | 91.3/87.5 |
| C39 | 4510008870 | S.ELE EEE1AA471UP | T | 57.9/49.8 |
| C40 | 4030011600 | S.CER C1608 JB 1E 104K-T | T | 84/70.6 |
| C41 | 4030011600 | S.CER C1608 JB 1E 104K-T | T | 78.5/73.2 |
| C43 | 4030006880 | S.CER C1608 JB 1H 472K-T | T | 88.8/95.5 |
| C66 | 4510008540 | S.ELE EEE1CA100SR | T | 106.6/81.6 |
| C68 | 4030011600 | S.CER C1608 JB 1E 104K-T | B | 103.6/82.8 |
| C69 | 4030011600 | S.CER C1608 JB 1E 104K-T | T | 118.4/79.9 |
| C70 | 4030011600 | S.CER C1608 JB 1E 104K-T | T | 95.8/80.5 |
| C71 | 4030011600 | S.CER C1608 JB 1E 104K-T | T | 106.9/77.6 |
| C72 | 4510008540 | S.ELE EEE1CA100SR | T | 111.6/83.3 |
| C88 | 4030011600 | S.CER C1608 JB 1E 104K-T | B | 7.8/81.8 |
| C102 | 4010005530 | CER HM60SJ SL 020C 500V | | |
| C103 | 4010005530 | CER HM60SJ SL 020C 500V | | |
| C104 | 4610002250 | TRI TZ03R200Y169B00 | | |
| C105 | 4030011540 | S.CER C1608 CH 1H 750J-T | B | 13.1/28.5 |
| C106 | 4030011540 | S.CER C1608 CH 1H 750J-T | T | 25.8/33.1 |
| C107 | 4030017810 | S.CER C1608 CH 1H 102J-T | T | 12.2/36 |
| C108 | 4030017810 | S.CER C1608 CH 1H 102J-T | T | 25.8/35.5 |
| C109 | 4030006880 | S.CER C1608 JB 1H 472K-T | B | 21.6/38.4 |
| C110 | 4030006880 | S.CER C1608 JB 1H 472K-T | B | 18.5/38.4 |
| C111 | 4510008540 | S.ELE EEE1CA100SR | T | 25.4/45.8 |
| C112 | 4510008540 | S.ELE EEE1CA100SR | T | 18.8/46.4 |
| C113 | 4030006880 | S.CER C1608 JB 1H 472K-T | T | 16.3/41.8 |
| C114 | 4030006880 | S.CER C1608 JB 1H 472K-T | T | 23/41.8 |
| C115 | 4030007100 | S.CER C1608 CH 1H 560J-T | B | 13.1/26.9 |
| C116 | 4030011540 | S.CER C1608 CH 1H 750J-T | T | 25.8/34.3 |
| C119 | 4030007100 | S.CER C1608 CH 1H 560J-T | T | 16.9/24.1 |
| C151 | 4010005540 | CER HM60SJ SL 030C 500V | | |
| C152 | 4030007070 | S.CER C1608 CH 1H 330J-T | T | 33/34.3 |
| C153 | 4030007120 | S.CER C1608 CH 1H 820J-T | T | 32.3/35.6 |
| C154 | 4030007070 | S.CER C1608 CH 1H 330J-T | T | 38.5/34.5 |
| C155 | 4030007120 | S.CER C1608 CH 1H 820J-T | T | 35.9/34.5 |
| C156 | 4030006880 | S.CER C1608 JB 1H 472K-T | T | 29.8/37.5 |

## [CTRL BOARD]

| REF NO. | ORDER NO. | DESCRIPTION | M. | H/V LOCATION |
|---|---|---|---|---|
| C157 | 4030006880 | S.CER C1608 JB 1H 472K-T | T | 41.6/38.4 |
| C158 | 4030007060 | S.CER C1608 CH 1H 270J-T | T | 29.7/35.6 |
| C159 | 4030006880 | S.CER C1608 JB 1H 472K-T | T | 34.4/38.4 |
| C161 | 4030006880 | S.CER C1608 JB 1H 472K-T | T | 45.2/51.5 |
| C162 | 4550003120 | S.TAN TEESVD2 1A 476M12R | T | 46.7/46.3 |
| C163 | 4030007170 | S.CER C1608 CH 1H 221J-T | T | 30.1/59.5 |
| C164 | 4030007170 | S.CER C1608 CH 1H 221J-T | T | 31.5/55.6 |
| C165 | 4030006880 | S.CER C1608 JB 1H 472K-T | T | 31.5/51.7 |
| C171 | 4030006880 | S.CER C1608 JB 1H 472K-T | B | 40.2/37.7 |
| C173 | 4030006880 | S.CER C1608 JB 1H 472K-T | T | 28.3/48.4 |
| C174 | 4030006880 | S.CER C1608 JB 1H 472K-T | T | 42.2/49.6 |
| C175 | 4030006880 | S.CER C1608 JB 1H 472K-T | T | 35.9/49.8 |
| C180 | 4030011600 | S.CER C1608 JB 1E 104K-T | T | 28.3/49.7 |
| C181 | 4030011600 | S.CER C1608 JB 1E 104K-T | T | 42.2/48.3 |
| C201 | 4010005580 | CER HM60SJ SL 070D 500V | | |
| C202 | 4010005520 | CER HM60SJ SL 010C 500V | | |
| C204 | 4030011570 | S.CER CM105 CH 101G 50AT | T | 55.3/36.9 |
| C205 | 4030016550 | S.CER CM105 CH 151G 50AT | T | 51.4/36.9 |
| C206 | 4030009530 | S.CER C1608 CH 1H 030B-T | T | 52.7/36.9 |
| C207 | 4030006880 | S.CER C1608 JB 1H 472K-T | T | 49.8/39.3 |
| C208 | 4030006880 | S.CER C1608 JB 1H 472K-T | T | 56.1/40 |
| C209 | 4030017810 | S.CER C1608 CH 1H 102J-T | T | 51.7/40 |
| C210 | 4030006880 | S.CER C1608 JB 1H 472K-T | T | 53.5/40 |
| C211 | 4030006880 | S.CER C1608 JB 1H 472K-T | T | 14.4/49.4 |
| C212 | 4030006880 | S.CER C1608 JB 1H 472K-T | T | 23.8/49.4 |
| C213 | 4030006880 | S.CER C1608 JB 1H 472K-T | B | 19.7/55.7 |
| C214 | 4030007170 | S.CER C1608 CH 1H 221J-T | T | 14.7/59.4 |
| C215 | 4030007170 | S.CER C1608 CH 1H 221J-T | T | 21.4/59.4 |
| C216 | 4030011340 | S.CER C1608 CH 1H 471J-T | T | 15.4/61.4 |
| C217 | 4030011340 | S.CER C1608 CH 1H 471J-T | T | 20.6/61.4 |
| C218 | 4030006880 | S.CER C1608 JB 1H 472K-T | B | 18.2/54.1 |
| C252 | 4030006880 | S.CER C1608 JB 1H 472K-T | T | 72.9/33.3 |
| C253 | 4030006880 | S.CER C1608 JB 1H 472K-T | T | 76.6/38.3 |
| C254 | 4030006880 | S.CER C1608 JB 1H 472K-T | T | 72.9/48.1 |
| C255 | 4030006880 | S.CER C1608 JB 1H 472K-T | T | 73/38.2 |
| C301 | 4010005520 | CER HM60SJ SL 010C 500V | | |
| C302 | 4030007030 | S.CER C1608 CH 1H 150J-T | T | 85.5/56.6 |
| C303 | 4030007050 | S.CER C1608 CH 1H 220J-T | T | 85.5/59.2 |
| C304 | 4030017810 | S.CER C1608 CH 1H 102J-T | T | 83.7/60.5 |
| C305 | 4030017810 | S.CER C1608 CH 1H 102J-T | T | 90.3/61.3 |
| C307 | 4030006880 | S.CER C1608 JB 1H 472K-T | T | 78.7/55.8 |
| C308 | 4030006880 | S.CER C1608 JB 1H 472K-T | T | 77.9/59.7 |
| C309 | 4030011600 | S.CER C1608 JB 1E 104K-T | T | 68.8/59.8 |
| C310 | 4030009530 | S.CER C1608 CH 1H 030B-T | T | 85.5/57.9 |
| C417 | 4510008540 | S.ELE EEE1CA100SR | T | 22.6/77.6 |
| C418 | 4510008540 | S.ELE EEE1CA100SR | T | 40.6/85.6 |
| C419 | 4030006880 | S.CER C1608 JB 1H 472K-T | T | 19.6/78.7 |
| C420 | 4030006880 | S.CER C1608 JB 1H 472K-T | T | 38.4/79.2 |
| | | | | |
| RL251 | 6330001530 | RLY NR-HD (5V) AE5349 | | |
| RL252 | 6330001460 | RLY FTR-F1CA012V | | |
| RL253 | 6330001460 | RLY FTR-F1CA012V | | |
| | | | | |
| CP1 | 6910009670 | S.CHK HK3-S-T | T | 67.7/100.1 |
| CP101 | 6910009670 | S.CHK HK3-S-T | T | 5/83.4 |
| | | | | |
| J1 | 6510023771 | S.CNR 52793-2470 (2490) | T | 101.8/99.6 |
| J2 | 6510023761 | S.CNR S10B-PH-SM4-TB (LF) (SN) | T | 148.3/82.8 |
| J51 | 6510023771 | S.CNR 52793-2470 (2490) | T | 43.9/99.6 |
| J52 | 6510022031 | S.CNR B10B-ZR-SM4-TF (LF) (SN) | T | 133/2.9 |
| J53 | 6510021431 | S.CNR S8B-ZR-SM4A-TF (LF) (SN) | T | 134.6/65 |
| J101 | 6510017920 | CNR 1811P342 | | |
| J251 | 6510017920 | CNR 1811P342 | | |
| J252 | 6510017920 | CNR 1811P342 | | |
| J301 | 6510017920 | CNR 1811P342 | | |
| J351 | 6510007020 | CNR TMP-J01X-V6 | | |
| | | | | |
| W1 | 9029804001 | WIR 72/99/040/X98/X98 | | |
| | | | | |
| EP1 | 9040902903 | TUB IRRAX 0.7 (d) L=22 mm | | |

M.=Mounted side (T: Mounted on the Top side, B: Mounted on the Bottom side)
S.=Surface mount

## [ANT-SW UNIT]

| REF NO. | ORDER NO. | DESCRIPTION | M. | H/V LOCATION |
|---|---|---|---|---|
| IC11 | 1130011510 | S.IC BU2099FV-E2 | T | 160.6/33.6 |
| IC12 | 1180002391 | S.REG S-812C33AMC-C2N-G | T | 152.4/28.7 |
| Q11 | 1590001001 | S.TR RN2427(RE85R,F) | T | 156.9/38.6 |
| Q12 | 1590001001 | S.TR RN2427(RE85R,F) | T | 152.3/36.9 |
| Q13 | 1590001001 | S.TR RN2427(RE85R,F) | T | 164.7/38.5 |
| Q14 | 1590001001 | S.TR RN2427(RE85R,F) | T | 164.7/17.5 |
| D51 | 1750000550 | S.DIO 1SS355 TE-17 | T | 161.9/13.3 |
| D52 | 1750000550 | S.DIO 1SS355 TE-17 | T | 140.3/42.9 |
| D53 | 1750000550 | S.DIO 1SS355 TE-17 | T | 115.1/41.4 |
| D61 | 1750000550 | S.DIO 1SS355 TE-17 | T | 118.9/19.7 |
| D62 | 1750000550 | S.DIO 1SS355 TE-17 | T | 107.1/43 |
| D63 | 1750000550 | S.DIO 1SS355 TE-17 | T | 79/43.6 |
| D71 | 1750000550 | S.DIO 1SS355 TE-17 | T | 68.7/21.4 |
| D72 | 1750000550 | S.DIO 1SS355 TE-17 | T | 61.6/42.9 |
| D73 | 1750000550 | S.DIO 1SS355 TE-17 | T | 65.8/43.4 |
| D81 | 1750000550 | S.DIO 1SS355 TE-17 | T | 36.9/19.7 |
| D82 | 1750000550 | S.DIO 1SS355 TE-17 | T | 41.4/45.2 |
| D83 | 1750000550 | S.DIO 1SS355 TE-17 | T | 28.2/45.3 |
| D84 | 1750000550 | S.DIO 1SS355 TE-17 | T | 25.8/43 |
| L1 | 6200003590 | S.COL EXCCL3225U1 | T | 155.7/27.5 |
| L2 | 6110001670 | COL LA-253 | | |
| R1 | 7540000100 | ABS SRYH-350L | | |
| R2 | 7540000130 | ABS 2P-50A-301 | | |
| R3 | 7540000130 | ABS 2P-50A-301 | | |
| R11 | 7030003320 | S.RES ERJ3GEYJ 101 V (100) | T | 165.5/27.4 |
| R12 | 7030003320 | S.RES ERJ3GEYJ 101 V (100) | T | 164.2/27.4 |
| R13 | 7030003320 | S.RES ERJ3GEYJ 101 V (100) | T | 162.9/27.4 |
| R14 | 7030003320 | S.RES ERJ3GEYJ 101 V (100) | T | 166.2/33.9 |
| R15 | 7030003320 | S.RES ERJ3GEYJ 101 V (100) | T | 148.7/31.6 |
| R16 | 7030003320 | S.RES ERJ3GEYJ 101 V (100) | T | 151.5/31.6 |
| R17 | 7030003320 | S.RES ERJ3GEYJ 101 V (100) | T | 154.7/39.4 |
| R18 | 7030003320 | S.RES ERJ3GEYJ 101 V (100) | T | 151.4/32.9 |
| R19 | 7030003320 | S.RES ERJ3GEYJ 101 V (100) | T | 151.4/34.2 |
| R20 | 7030003320 | S.RES ERJ3GEYJ 101 V (100) | T | 152.1/39.1 |
| R21 | 7030003320 | S.RES ERJ3GEYJ 101 V (100) | T | 154.7/36.6 |
| R22 | 7030003320 | S.RES ERJ3GEYJ 101 V (100) | T | 166.9/38.7 |
| R23 | 7030003320 | S.RES ERJ3GEYJ 101 V (100) | T | 162.3/38.9 |
| R24 | 7030003320 | S.RES ERJ3GEYJ 101 V (100) | T | 161/39.1 |
| R25 | 7030003320 | S.RES ERJ3GEYJ 101 V (100) | T | 159.7/39.1 |
| R26 | 7030003320 | S.RES ERJ3GEYJ 101 V (100) | T | 162.7/15.6 |
| C1 | 4010005610 | CER HM60SJ SL 100D 500V | | |
| C2 | 4010005660 | CER HM60SJ SL 220J 500V | | |
| C11 | 4030011600 | S.CER C1608 JB 1E 104K-T | T | 160/27.6 |
| C12 | 4030011600 | S.CER C1608 JB 1E 104K-T | T | 158.7/27.6 |
| C51 | 4030006880 | S.CER C1608 JB 1H 472K-T | T | 163.5/13.6 |
| C52 | 4030006880 | S.CER C1608 JB 1H 472K-T | T | 144.5/41.3 |
| C53 | 4030006880 | S.CER C1608 JB 1H 472K-T | T | 113.5/41.7 |
| C61 | 4030006880 | S.CER C1608 JB 1H 472K-T | T | 119.2/21.3 |
| C62 | 4030006880 | S.CER C1608 JB 1H 472K-T | T | 107.4/44.5 |
| C63 | 4030006880 | S.CER C1608 JB 1H 472K-T | T | 77.5/43.6 |
| C71 | 4030006880 | S.CER C1608 JB 1H 472K-T | T | 69/19.9 |
| C72 | 4030006880 | S.CER C1608 JB 1H 472K-T | T | 61.6/44.5 |
| C73 | 4030006880 | S.CER C1608 JB 1H 472K-T | T | 73/43.4 |
| C81 | 4030006880 | S.CER C1608 JB 1H 472K-T | T | 37.2/21.3 |
| C82 | 4030006880 | S.CER C1608 JB 1H 472K-T | T | 42.9/45.2 |
| C83 | 4030006880 | S.CER C1608 JB 1H 472K-T | T | 26.6/45.6 |
| C84 | 4030006880 | S.CER C1608 JB 1H 472K-T | T | 25/45.6 |
| RL51 | 6330001460 | RLY FTR-F1CA012V | | |
| RL52 | 6330001780 | RLY FTR-MYAA012D | | |
| RL53 | 6330001780 | RLY FTR-MYAA012D | | |
| RL61 | 6330001460 | RLY FTR-F1CA012V | | |
| RL62 | 6330001780 | RLY FTR-MYAA012D | | |
| RL63 | 6330001780 | RLY FTR-MYAA012D | | |
| RL71 | 6330001460 | RLY FTR-F1CA012V | | |
| RL72 | 6330001780 | RLY FTR-MYAA012D | | |
| RL73 | 6330001780 | RLY FTR-MYAA012D | | |
| RL81 | 6330001460 | RLY FTR-F1CA012V | | |
| RL82 | 6330001780 | RLY FTR-MYAA012D | | |
| RL83 | 6330001780 | RLY FTR-MYAA012D | | |
| RL84 | 6330001780 | RLY FTR-MYAA012D | | |
| J1 | 6510017930 | CNR 1771P145-20 | | |
| J2 | 6510007020 | CNR TMP-J01X-V6 | | |
| J3 | 6510007020 | CNR TMP-J01X-V6 | | |
| J4 | 6510019971 | S.CNR 52808-1071 | T | 153/22 |
| J51 | 6510000410 | CNR MR-DS-E 02 | | |
| J61 | 6510000410 | CNR MR-DS-E 02 | | |
| J71 | 6510000410 | CNR MR-DS-E 02 | | |
| J81 | 6510000410 | CNR MR-DS-E 02 | | |

## [OSC UNIT]

| REF NO. | ORDER NO. | DESCRIPTION | M. | H/V LOCATION |
|---|---|---|---|---|
| IC10 | 1180002610 | S.REG BA12FP-E2 | T | 37.8/20 |
| IC91 | 1190002001 | S.IC AD5260BRUZ50 | T | 26.8/12 |
| IC92 | 1130005721 | S.IC TC7W04F (TE12L,F) | T | 23.7/6.1 |
| Q10 | 1590000680 | S.TR DTC114EUA T106 | T | 32.4/35 |
| Q11 | 1590000680 | S.TR DTC114EUA T106 | T | 22.1/42.4 |
| Q12 | 1590000680 | S.TR DTC114EUA T106 | T | 29.1/41.5 |
| Q13 | 1590000680 | S.TR DTC114EUA T106 | T | 31.6/41.5 |
| Q21 | 1530002060 | S.TR 2SC4081 T106 R | T | 11.3/6.3 |
| Q22 | 1530002601 | S.TR 2SC4215-O (TE85R,F) | T | 10.4/17.8 |
| Q23 | 1590000680 | S.TR DTC114EUA T106 | T | 13/11 |
| Q42 | 1530002601 | S.TR 2SC4215-O (TE85R,F) | T | 18.8/18.8 |
| Q43 | 1590000680 | S.TR DTC114EUA T106 | T | 19.6/11.7 |
| Q61 | 1530002060 | S.TR 2SC4081 T106 R | T | 26.1/36.1 |
| Q62 | 1530002060 | S.TR 2SC4081 T106 R | T | 20.6/38.6 |
| Q70 | 1530002060 | S.TR 2SC4081 T106 R | T | 9.9/41.2 |
| Q101 | 1530002700 | S.TR 2SC4097 T106Q | T | 36.7/40 |
| D10 | 1790001250 | S.DIO MA2S111-(TX) | T | 31.4/31.7 |
| D11 | 1790001250 | S.DIO MA2S111-(TX) | T | 16.5/38.2 |
| D71 | 1750000380 | S.DIO 1SS312 (TE85R) | T | 29.8/34.9 |
| D72 | 1750000380 | S.DIO 1SS312 (TE85R) | T | 29.9/37.6 |
| X1 | 6050012210 | XTL CR-772.OCVXO-148A | | |
| L1 | 6200003950 | S.COL HF50ACC 322513-T | T | 38.8/43.7 |
| L2 | 6200003950 | S.COL HF50ACC 322513-T | T | 35.8/43.7 |
| L10 | 6200003950 | S.COL HF50ACC 322513-T | T | 94.7/30.6 |
| L20 | 6200005491 | S.COL NLV32T-331J | T | 14.7/1.9 |
| L21 | 6200003261 | S.COL NLV32T-101J | T | 6.9/11.2 |
| L22 | 6200003261 | S.COL NLV32T-101J | T | 7.9/14.7 |
| L23 | 6200003041 | S.COL NLV32T-R68J | T | 6.9/20.3 |
| L24 | 6200003051 | S.COL NLV32T-R82J | T | 6.2/23.8 |
| L41 | 6200003261 | S.COL NLV32T-101J | T | 15.3/13.7 |
| L42 | 6200003261 | S.COL NLV32T-101J | T | 14.7/17.2 |
| L43 | 6200003041 | S.COL NLV32T-R68J | T | 15.3/22.4 |
| L44 | 6200003051 | S.COL NLV32T-R82J | T | 18.8/24.2 |
| L61 | 6150004170 | COL LS-476 | | |
| L62 | 6150004170 | COL LS-476 | | |
| L91 | 6200003950 | S.COL HF50ACC 322513-T | T | 23.6/20.3 |
| L92 | 6200003950 | S.COL HF50ACC 322513-T | T | 19.4/4.3 |
| R1 | 7030003440 | S.RES ERJ3GEYJ 102 V (1 k) | T | 32.4/44.3 |
| R2 | 7030003440 | S.RES ERJ3GEYJ 102 V (1 k) | T | 29.8/44.2 |
| R3 | 7030003440 | S.RES ERJ3GEYJ 102 V (1 k) | T | 25.8/44.2 |
| R11 | 7030003200 | S.RES ERJ3GEYJ 100 V (10) | T | 33.3/32.3 |
| R12 | 7030003200 | S.RES ERJ3GEYJ 100 V (10) | T | 16.7/40.3 |
| R13 | 7030003440 | S.RES ERJ3GEYJ 102 V (1 k) | T | 16.8/11.6 |
| R20 | 7030003240 | S.RES ERJ3GEYJ 220 V (22) | T | 11.3/1.8 |
| R21 | 7030003560 | S.RES ERJ3GEYJ 103 V (10 k) | T | 11.1/4.4 |
| R22 | 7030003370 | S.RES ERJ3GEYJ 271 V (270) | T | 15.5/7.9 |
| R23 | 7030004040 | S.RES ERJ3GEYJ 4R7 V (4.7) | T | 11.4/14 |
| R24 | 7030003370 | S.RES ERJ3GEYJ 271 V (270) | T | 12.3/17.7 |
| R25 | 7030003500 | S.RES ERJ3GEYJ 332 V (3.3 k) | T | 10.1/14.2 |
| R26 | 7030003480 | S.RES ERJ3GEYJ 222 V (2.2 k) | T | 12.8/9.1 |
| R27 | 7030003360 | S.RES ERJ3GEYJ 221 V (220) | T | 5.8/13.9 |
| R28 | 7030003440 | S.RES ERJ3GEYJ 102 V (1 k) | T | 10.2/11.9 |
| R43 | 7030003240 | S.RES ERJ3GEYJ 220 V (22) | T | 19.7/14.2 |
| R44 | 7030003370 | S.RES ERJ3GEYJ 271 V (270) | T | 20.7/18.6 |
| R45 | 7030003500 | S.RES ERJ3GEYJ 332 V (3.3 k) | T | 17.9/15.1 |
| R46 | 7030003480 | S.RES ERJ3GEYJ 222 V (2.2 k) | T | 19.4/9.8 |
| R47 | 7030003290 | S.RES ERJ3GEYJ 560 V (56) | T | 16.8/17.9 |
| R61 | 7030003240 | S.RES ERJ3GEYJ 220 V (22) | T | 22.2/35.4 |
| R62 | 7030003560 | S.RES ERJ3GEYJ 103 V (10 k) | T | 26.3/34.2 |
| R63 | 7030003380 | S.RES ERJ3GEYJ 331 V (330) | T | 25.9/38 |
| R64 | 7030003280 | S.RES ERJ3GEYJ 470 V (47) | T | 20.8/40.5 |
| R65 | 7030003400 | S.RES ERJ3GEYJ 471 V (470) | T | 20/34.8 |
| R67 | 7030003560 | S.RES ERJ3GEYJ 103 V (10 k) | T | 19.6/36.7 |
| R68 | 7030003550 | S.RES ERJ3GEYJ 822 V (8.2 k) | T | 22.2/36.7 |
| R71 | 7030003340 | S.RES ERJ3GEYJ 151 V (150) | T | 32.6/38.2 |
| R72 | 7030003270 | S.RES ERJ3GEYJ 390 V (39) | T | 31.2/39.5 |
| R73 | 7030003340 | S.RES ERJ3GEYJ 151 V (150) | T | 28.6/39.5 |
| R75 | 7030003280 | S.RES ERJ3GEYJ 470 V (47) | T | 16.2/43.1 |
| R77 | 7030003320 | S.RES ERJ3GEYJ 101 V (100) | T | 12.5/44.6 |
| R78 | 7030003470 | S.RES ERJ3GEYJ 182 V (1.8 k) | T | 8/41 |
| R79 | 7030003480 | S.RES ERJ3GEYJ 222 V (2.2 k) | T | 6.1/41.6 |
| R80 | 7030003360 | S.RES ERJ3GEYJ 221 V (220) | T | 11.8/41 |
| R82 | 7030003280 | S.RES ERJ3GEYJ 470 V (47) | T | 17.5/43.1 |
| R91 | 7030006091 | S.RES ERA3YED 822V (8.2 k) | T | 19.5/7.1 |
| R92 | 7030005341 | S.RES ERA3YED 332V (3.3 k) | T | 19.5/8.4 |
| R93 | 7030003560 | S.RES ERJ3GEYJ 103 V (10 k) | T | 25.6/1.4 |
| R94 | 7030003540 | S.RES ERJ3GEYJ 682 V (6.8 k) | T | 25.6/2.7 |
| R95 | 7030003320 | S.RES ERJ3GEYJ 101 V (100) | T | 22.4/16.7 |
| R96 | 7030003440 | S.RES ERJ3GEYJ 102 V (1 k) | T | 32/14.1 |
| R97 | 7030003440 | S.RES ERJ3GEYJ 102 V (1 k) | T | 28.6/16.1 |
| R98 | 7030003640 | S.RES ERJ3GEYJ 473 V (47 k) | T | 27.3/16.1 |
| R99 | 7030003480 | S.RES ERJ3GEYJ 222 V (2.2 k) | T | 22.4/10.1 |

M.=Mounted side (T: Mounted on the Top side, B: Mounted on the Bottom side)
S.=Surface mount

## [OSC UNIT]

| REF NO. | ORDER NO. | DESCRIPTION | M. | H/V LOCATION |
|---|---|---|---|---|
| R100 | 7030003640 | S.RES ERJ3GEYJ 473 V (47 k) | T | 27.2/6.4 |
| R101 | 7030003360 | S.RES ERJ3GEYJ 221 V (220) | T | 36.9/38.1 |
| R102 | 7030005981 | S.RES ERA3YED 333V (33 k) | T | 32.4/6.7 |
| C1 | 4030006880 | S.CER C1608 JB 1H 472K-T | T | 39.6/47.6 |
| C2 | 4030006880 | S.CER C1608 JB 1H 472K-T | T | 31.1/44.3 |
| C3 | 4030006880 | S.CER C1608 JB 1H 472K-T | T | 33.7/44 |
| C4 | 4030006880 | S.CER C1608 JB 1H 472K-T | T | 30.5/8.6 |
| C5 | 4510008550 | S.ELE EEE1HA010SR | T | 30.6/2.6 |
| C6 | 4030006880 | S.CER C1608 JB 1H 472K-T | T | 35/3.4 |
| C7 | 4510008550 | S.ELE EEE1HA010SR | T | 38.7/2.6 |
| C8 | 4030011600 | S.CER C1608 JB 1E 104K-T | T | 17.3/2.1 |
| C9 | 4030006880 | S.CER C1608 JB 1H 472K-T | T | 27.1/43.1 |
| C10 | 4510008680 | S.ELE EEE1EA220SP | T | 29.7/21.3 |
| C11 | 4030004760 | S.CER C2012 JF 1H 104Z-T | T | 35.9/13 |
| C12 | 4030006880 | S.CER C1608 JB 1H 472K-T | T | 39.2/12.8 |
| C13 | 4510008680 | S.ELE EEE1EA220SP | T | 37.1/8.6 |
| C14 | 4030006880 | S.CER C1608 JB 1H 472K-T | T | 94.7/33.9 |
| C15 | 4030011600 | S.CER C1608 JB 1E 104K-T | T | 39.2/14.1 |
| C16 | 4030011600 | S.CER C1608 JB 1E 104K-T | T | 29.6/32.3 |
| C17 | 4030011600 | S.CER C1608 JB 1E 104K-T | T | 19.4/41.8 |
| C18 | 4030011600 | S.CER C1608 JB 1E 104K-T | T | 17.8/38.3 |
| C19 | 4030011600 | S.CER C1608 JB 1E 104K-T | T | 31.5/33 |
| C20 | 4030011600 | S.CER C1608 JB 1E 104K-T | T | 13.3/5.2 |
| C21 | 4030011600 | S.CER C1608 JB 1E 104K-T | T | 11.3/3.1 |
| C22 | 4030011600 | S.CER C1608 JB 1E 104K-T | T | 15/11 |
| C23 | 4030011600 | S.CER C1608 JB 1E 104K-T | T | 11.9/15.8 |
| C24 | 4030011600 | S.CER C1608 JB 1E 104K-T | T | 12.7/14 |
| C25 | 4030011600 | S.CER C1608 JB 1E 104K-T | T | 10.2/19.8 |
| C26 | 4030017800 | S.CER C1608 CH 1H 561J-T | T | 10.2/21.1 |
| C27 | 4030007120 | S.CER C1608 CH 1H 820J-T | T | 7.7/18.2 |
| C28 | 4030011340 | S.CER C1608 CH 1H 471J-T | T | 8.9/22.5 |
| C29 | 4030011330 | S.CER C1608 CH 1H 391J-T | T | 10.2/23.8 |
| C30 | 4030007050 | S.CER C1608 CH 1H 220J-T | T | 8.4/24.5 |
| C31 | 4030017800 | S.CER C1608 CH 1H 561J-T | T | 10.2/25.1 |
| C32 | 4030011600 | S.CER C1608 JB 1E 104K-T | T | 10.8/9.2 |
| C33 | 4030011600 | S.CER C1608 JB 1E 104K-T | T | 9.5/10.1 |
| C42 | 4030011600 | S.CER C1608 JB 1E 104K-T | T | 21.6/12.7 |
| C43 | 4030011600 | S.CER C1608 JB 1E 104K-T | T | 20.1/16.8 |
| C44 | 4030011600 | S.CER C1608 JB 1E 104K-T | T | 19.9/15.5 |
| C45 | 4030011600 | S.CER C1608 JB 1E 104K-T | T | 13.2/20.6 |
| C46 | 4030017800 | S.CER C1608 CH 1H 561J-T | T | 15/19.8 |
| C47 | 4030007120 | S.CER C1608 CH 1H 820J-T | T | 13.2/23.2 |
| C48 | 4030011340 | S.CER C1608 CH 1H 471J-T | T | 17.5/21.5 |
| C49 | 4030011330 | S.CER C1608 CH 1H 391J-T | T | 18.8/21.5 |
| C50 | 4030007050 | S.CER C1608 CH 1H 220J-T | T | 20.6/22.1 |
| C51 | 4030017800 | S.CER C1608 CH 1H 561J-T | T | 21.7/24.4 |
| C52 | 4030011600 | S.CER C1608 JB 1E 104K-T | T | 17.6/8.8 |
| C53 | 4030011600 | S.CER C1608 JB 1E 104K-T | T | 16.3/9.7 |
| C61 | 4030011600 | S.CER C1608 JB 1E 104K-T | T | 26.3/32.9 |
| C62 | 4030011600 | S.CER C1608 JB 1E 104K-T | T | 24.1/36.1 |
| C63 | 4030011600 | S.CER C1608 JB 1E 104K-T | T | 25.9/39.3 |
| C64 | 4030011600 | S.CER C1608 JB 1E 104K-T | T | 22.7/34.1 |
| C66 | 4030007010 | S.CER C1608 CH 1H 100D-T | T | 12.8/25.1 |
| C67 | 4030011600 | S.CER C1608 JB 1E 104K-T | T | 17/35.4 |
| C71 | 4030006880 | S.CER C1608 JB 1H 472K-T | T | 33.8/39.5 |
| C72 | 4030006880 | S.CER C1608 JB 1H 472K-T | T | 14.4/45.4 |
| C73 | 4030006880 | S.CER C1608 JB 1H 472K-T | T | 6.1/40.3 |
| C74 | 4030006880 | S.CER C1608 JB 1H 472K-T | T | 10/43.2 |
| C75 | 4030006880 | S.CER C1608 JB 1H 472K-T | T | 13.1/40.9 |
| C76 | 4030006880 | S.CER C1608 JB 1H 472K-T | T | 19.4/45.4 |
| C77 | 4030011600 | S.CER C1608 JB 1E 104K-T | T | 10.7/44.6 |
| C91 | 4030006880 | S.CER C1608 JB 1H 472K-T | T | 25.5/16.4 |
| C92 | 4030006880 | S.CER C1608 JB 1H 472K-T | T | 17.3/4.7 |
| C93 | 4030006880 | S.CER C1608 JB 1H 472K-T | T | 22.1/2.7 |
| C94 | 4030006880 | S.CER C1608 JB 1H 472K-T | T | 27.9/8.6 |
| C101 | 4550006480 | S.TAN TEESVA 1C 475M8R | T | 40/38.9 |
| RL10 | 6330001750 | RLY FTR-B4CA012Z | | |
| RL11 | 6330001750 | RLY FTR-B4CA012Z | | |
| J2 | 6510019971 | S.CNR 52808-1071 | T | 30.5/48.8 |
| J71 | 6510007020 | CNR TMP-J01X-V6 | | |
| J72 | 6510007020 | CNR TMP-J01X-V6 | | |
| J73 | 6510007020 | CNR TMP-J01X-V6 | | |

## [REG UNIT]

| REF NO. | ORDER NO. | DESCRIPTION | M. | H/V LOCATION |
|---|---|---|---|---|
| EP1 | 6910016050 | EDB FP2212B FCC [USA] | | |
| | 6910016060 | EDB FP2212C RTTE [Others] | | |

## [DIGSEL UNIT]

| REF NO. | ORDER NO. | DESCRIPTION | M. | H/V LOCATION |
|---|---|---|---|---|
| IC1 | 1130011141 | S.IC CAT24WC256X-1.8-T13 | B | 18.9/51.9 |
| IC4 | 1130011510 | S.IC BU2099FV-E2 | T | 29.9/55.8 |
| IC5 | 1130011510 | S.IC BU2099FV-E2 | T | 18.5/55.8 |
| IC501 | 1130011141 | S.IC CAT24WC256X-1.8-T13 | B | 17.5/26.4 |
| IC504 | 1130011510 | S.IC BU2099FV-E2 | T | 28.3/29.2 |
| IC505 | 1130011510 | S.IC BU2099FV-E2 | T | 18.1/29.3 |
| Q201 | 1530003851 | S.TR 2SC5551F-TD-E | T | 48.5/52.8 |
| Q701 | 1530003851 | S.TR 2SC5551F-TD-E | T | 49.7/21.3 |
| D21 | 1750000550 | S.DIO 1SS355 TE-17 | B | 28.5/45.9 |
| D51 | 1750000550 | S.DIO 1SS355 TE-17 | B | 60.7/57.2 |
| D52 | 1750000550 | S.DIO 1SS355 TE-17 | B | 61.6/44.8 |
| D53 | 1750000550 | S.DIO 1SS355 TE-17 | T | 53.1/59.2 |
| D54 | 1750000550 | S.DIO 1SS355 TE-17 | B | 90.2/68.2 |
| D55 | 1750000550 | S.DIO 1SS355 TE-17 | B | 69.5/68.4 |
| D56 | 1750000550 | S.DIO 1SS355 TE-17 | B | 67.3/55.1 |
| D57 | 1750000550 | S.DIO 1SS355 TE-17 | T | 66/48.7 |
| D58 | 1750000550 | S.DIO 1SS355 TE-17 | B | 114.3/50.2 |
| D59 | 1750000550 | S.DIO 1SS355 TE-17 | B | 90.5/51 |
| D60 | 1750000550 | S.DIO 1SS355 TE-17 | B | 90.5/54.4 |
| D61 | 1750000550 | S.DIO 1SS355 TE-17 | B | 114.3/53.5 |
| D62 | 1750000550 | S.DIO 1SS355 TE-17 | B | 138.2/50.2 |
| D63 | 1750000550 | S.DIO 1SS355 TE-17 | B | 138.2/53.7 |
| D64 | 1750000550 | S.DIO 1SS355 TE-17 | B | 162.1/50.1 |
| D65 | 1750000550 | S.DIO 1SS355 TE-17 | B | 162.1/53.7 |
| D66 | 1750000550 | S.DIO 1SS355 TE-17 | B | 180.9/47.7 |
| D67 | 1750000550 | S.DIO 1SS355 TE-17 | B | 114.3/57.2 |
| D68 | 1750000550 | S.DIO 1SS355 TE-17 | T | 85.8/64.1 |
| D69 | 1750000550 | S.DIO 1SS355 TE-17 | B | 183.4/63 |
| D70 | 1750000550 | S.DIO 1SS355 TE-17 | B | 162.1/61.3 |
| D71 | 1750000550 | S.DIO 1SS355 TE-17 | B | 162.1/57.5 |
| D72 | 1750000550 | S.DIO 1SS355 TE-17 | B | 138.2/61.3 |
| D73 | 1750000550 | S.DIO 1SS355 TE-17 | B | 138.2/57.5 |
| D74 | 1750000550 | S.DIO 1SS355 TE-17 | B | 114.3/61.4 |
| D75 | 1750000550 | S.DIO 1SS355 TE-17 | B | 90.5/59.1 |
| D201 | 1710001020 | DIO XB15A204 | | |
| D202 | 1710001020 | DIO XB15A204 | | |
| D203 | 1750000550 | S.DIO 1SS355 TE-17 | B | 48.3/73.3 |
| D204 | 1750000550 | S.DIO 1SS355 TE-17 | B | 46.1/73.3 |
| D205 | 1750000550 | S.DIO 1SS355 TE-17 | B | 44.8/69.7 |
| D521 | 1750000550 | S.DIO 1SS355 TE-17 | B | 25/35.2 |
| D551 | 1750000550 | S.DIO 1SS355 TE-17 | B | 63.7/9.2 |
| D552 | 1750000550 | S.DIO 1SS355 TE-17 | B | 61.7/23 |
| D553 | 1750000550 | S.DIO 1SS355 TE-17 | B | 58/8.5 |
| D554 | 1750000550 | S.DIO 1SS355 TE-17 | B | 91/12.8 |
| D555 | 1750000550 | S.DIO 1SS355 TE-17 | T | 68.6/11.7 |
| D556 | 1750000550 | S.DIO 1SS355 TE-17 | B | 67.2/24.9 |
| D557 | 1750000550 | S.DIO 1SS355 TE-17 | B | 70.2/36.4 |
| D558 | 1750000550 | S.DIO 1SS355 TE-17 | B | 114.3/27.1 |
| D559 | 1750000550 | S.DIO 1SS355 TE-17 | B | 90.6/26.8 |
| D560 | 1750000550 | S.DIO 1SS355 TE-17 | B | 90.6/30.3 |
| D561 | 1750000550 | S.DIO 1SS355 TE-17 | B | 114.3/30.5 |
| D562 | 1750000550 | S.DIO 1SS355 TE-17 | B | 138.2/27.1 |
| D563 | 1750000550 | S.DIO 1SS355 TE-17 | B | 138.2/30.5 |
| D564 | 1750000550 | S.DIO 1SS355 TE-17 | B | 162.1/27.1 |
| D565 | 1750000550 | S.DIO 1SS355 TE-17 | B | 162.1/30.6 |
| D566 | 1750000550 | S.DIO 1SS355 TE-17 | B | 182.5/33.5 |
| D567 | 1750000550 | S.DIO 1SS355 TE-17 | B | 114.3/19.6 |
| D568 | 1750000550 | S.DIO 1SS355 TE-17 | B | 90.7/19.6 |
| D569 | 1750000550 | S.DIO 1SS355 TE-17 | B | 183.6/17.1 |
| D570 | 1750000550 | S.DIO 1SS355 TE-17 | B | 162.1/19.7 |
| D571 | 1750000550 | S.DIO 1SS355 TE-17 | B | 162.1/23.5 |
| D572 | 1750000550 | S.DIO 1SS355 TE-17 | B | 138.2/23.5 |
| D573 | 1750000550 | S.DIO 1SS355 TE-17 | B | 138.2/19.6 |
| D574 | 1750000550 | S.DIO 1SS355 TE-17 | B | 114.3/23.4 |
| D575 | 1750000550 | S.DIO 1SS355 TE-17 | B | 90.7/22.9 |
| D701 | 1710001020 | DIO XB15A204 | | |
| D702 | 1710001020 | DIO XB15A204 | | |
| D703 | 1750000550 | S.DIO 1SS355 TE-17 | B | 47/9 |
| D704 | 1750000550 | S.DIO 1SS355 TE-17 | B | 44.9/9 |
| D705 | 1750000550 | S.DIO 1SS355 TE-17 | T | 51.8/34.3 |
| L1 | 6200003261 | S.COL NLV32T-101J | B | 4.5/52 |
| L2 | 6200003950 | S.COL HF50ACC 322513-T | B | 4.7/40 |
| L3 | 6200003261 | S.COL NLV32T-101J | B | 4.5/48 |

M.=Mounted side (T: Mounted on the Top side, B: Mounted on the Bottom side)
S.=Surface mount

## [DIGSEL UNIT]

| REF NO. | ORDER NO. | DESCRIPTION | M. | H/V LOCATION |
|---|---|---|---|---|
| L4 | 6200003261 | S.COL NLV32T-101J | B | 4.5/44 |
| L101 | 6140003980 | COL LR-476 | | |
| L102 | 6140003990 | COL LR-477 | | |
| L103 | 6140004001 | COL LR-478A | | |
| L104 | 6140004010 | COL LR-479 | | |
| L105 | 6140004020 | COL LR-480 | | |
| L106 | 6140004030 | COL LR-481 | | |
| L107 | 6110003930 | COL LA-595 | | |
| L201 | 6180000920 | COL LAL 03NA 221K | | |
| L203 | 6140003940 | COL LR-493 | | |
| L503 | 6200003261 | S.COL NLV32T-101J | B | 4.5/36 |
| L504 | 6200003261 | S.COL NLV32T-101J | B | 4.5/32 |
| L601 | 6140003980 | COL LR-476 | | |
| L602 | 6140003990 | COL LR-477 | | |
| L603 | 6140004001 | COL LR-478A | | |
| L604 | 6140004010 | COL LR-479 | | |
| L605 | 6140004020 | COL LR-480 | | |
| L606 | 6140004030 | COL LR-481 | | |
| L607 | 6110003930 | COL LA-595 | | |
| L701 | 6180000920 | COL LAL 03NA 221K | | |
| L703 | 6140003940 | COL LR-493 | | |
| | | | | |
| R1 | 7030003680 | S.RES ERJ3GEYJ 104 V (100 k) | B | 17.3/60.8 |
| R2 | 7030003560 | S.RES ERJ3GEYJ 103 V (10 k) | B | 12.6/54.5 |
| R3 | 7030003560 | S.RES ERJ3GEYJ 103 V (10 k) | T | 26.1/51.6 |
| R4 | 7030003440 | S.RES ERJ3GEYJ 102 V (1 k) | T | 14.3/47.4 |
| R5 | 7030003440 | S.RES ERJ3GEYJ 102 V (1 k) | T | 15.7/44.8 |
| R6 | 7030003440 | S.RES ERJ3GEYJ 102 V (1 k) | T | 15.1/46.1 |
| R7 | 7030003440 | S.RES ERJ3GEYJ 102 V (1 k) | T | 4/52.9 |
| R8 | 7030003440 | S.RES ERJ3GEYJ 102 V (1 k) | T | 13.3/51.8 |
| R9 | 7030003360 | S.RES ERJ3GEYJ 221 V (220) | B | 32/45.9 |
| R10 | 7030003360 | S.RES ERJ3GEYJ 221 V (220) | T | 34.6/60 |
| R35 | 7030003360 | S.RES ERJ3GEYJ 221 V (220) | T | 27.9/62.4 |
| R36 | 7030003360 | S.RES ERJ3GEYJ 221 V (220) | T | 28.6/65.8 |
| R37 | 7030003360 | S.RES ERJ3GEYJ 221 V (220) | T | 29.3/62.4 |
| R38 | 7030003360 | S.RES ERJ3GEYJ 221 V (220) | T | 30/65.8 |
| R39 | 7030003360 | S.RES ERJ3GEYJ 221 V (220) | T | 30.7/62.4 |
| R40 | 7030003360 | S.RES ERJ3GEYJ 221 V (220) | T | 26.5/62.4 |
| R41 | 7030003360 | S.RES ERJ3GEYJ 221 V (220) | T | 27.2/65.8 |
| R42 | 7030003360 | S.RES ERJ3GEYJ 221 V (220) | T | 25.8/65.8 |
| R43 | 7030003360 | S.RES ERJ3GEYJ 221 V (220) | T | 25.1/62.4 |
| R44 | 7030003360 | S.RES ERJ3GEYJ 221 V (220) | T | 24.4/65.8 |
| R45 | 7030003360 | S.RES ERJ3GEYJ 221 V (220) | T | 23.7/62.4 |
| R46 | 7030003360 | S.RES ERJ3GEYJ 221 V (220) | T | 23/65.8 |
| R47 | 7030003360 | S.RES ERJ3GEYJ 221 V (220) | T | 21.2/62.4 |
| R48 | 7030003360 | S.RES ERJ3GEYJ 221 V (220) | T | 19.1/65.8 |
| R49 | 7030003360 | S.RES ERJ3GEYJ 221 V (220) | T | 18.4/62.4 |
| R50 | 7030003360 | S.RES ERJ3GEYJ 221 V (220) | T | 19.8/62.4 |
| R51 | 7030003360 | S.RES ERJ3GEYJ 221 V (220) | T | 20.5/65.8 |
| R52 | 7030003360 | S.RES ERJ3GEYJ 221 V (220) | T | 15.6/62.4 |
| R53 | 7030003360 | S.RES ERJ3GEYJ 221 V (220) | T | 14.9/65.8 |
| R54 | 7030003360 | S.RES ERJ3GEYJ 221 V (220) | T | 14.2/62.4 |
| R55 | 7030003360 | S.RES ERJ3GEYJ 221 V (220) | T | 16.3/65.8 |
| R56 | 7030003360 | S.RES ERJ3GEYJ 221 V (220) | T | 17/62.4 |
| R57 | 7030003360 | S.RES ERJ3GEYJ 221 V (220) | T | 17.7/65.8 |
| R58 | 7030003360 | S.RES ERJ3GEYJ 221 V (220) | T | 20.9/46.4 |
| R59 | 7030003440 | S.RES ERJ3GEYJ 102 V (1 k) | T | 14.9/49.7 |
| R100 | 7030000010 | S.RES MCR10EZHJ JPW | B | 26/47.3 |
| R104 | 7030003560 | S.RES ERJ3GEYJ 103 V (10 k) | B | 145.1/64.1 |
| R105 | 7030003560 | S.RES ERJ3GEYJ 103 V (10 k) | B | 131.1/62.7 |
| R201 | 7030000380 | S.RES MCR10EZHJ 1 k | B | 49.4/55.6 |
| R202 | 7030000290 | S.RES MCR10EZHJ 180 | B | 49.4/51.8 |
| R203 | 7030000220 | S.RES MCR10EZHJ 47 | B | 49.4/53.7 |
| R204 | 7030003360 | S.RES ERJ3GEYJ 221 V (220) | B | 48.2/69.7 |
| R205 | 7030003350 | S.RES ERJ3GEYJ 181 V (180) | T | 54.5/46.5 |
| R206 | 7030003370 | S.RES ERJ3GEYJ 271 V (270) | B | 49.4/48.7 |
| R207 | 7030003560 | S.RES ERJ3GEYJ 103 V (10 k) | T | 57.6/48.7 |
| R208 | 7030000200 | S.RES MCR10EZHJ 33 | B | 45.4/56.9 |
| R209 | 7030003240 | S.RES ERJ3GEYJ 220 V (22) | T | 44.2/53.9 |
| R210 | 7030003370 | S.RES ERJ3GEYJ 271 V (270) | B | 45.2/49.5 |
| R211 | 7030003370 | S.RES ERJ3GEYJ 271 V (270) | B | 45.2/50.8 |
| R213 | 7030000220 | S.RES MCR10EZHJ 47 | B | 38.1/55.9 |
| R214 | 7030003460 | S.RES ERJ3GEYJ 152 V (1.5 k) | B | 51.6/60 |
| R215 | 7030003460 | S.RES ERJ3GEYJ 152 V (1.5 k) | B | 52.4/58 |
| R216 | 7030003680 | S.RES ERJ3GEYJ 104 V (100 k) | B | 17.3/66.4 |
| R501 | 7030003680 | S.RES ERJ3GEYJ 104 V (100 k) | B | 14.5/21.2 |
| R502 | 7030003560 | S.RES ERJ3GEYJ 103 V (10 k) | B | 25.7/25.3 |
| R503 | 7030003560 | S.RES ERJ3GEYJ 103 V (10 k) | B | 24.4/25.3 |
| R504 | 7030003440 | S.RES ERJ3GEYJ 102 V (1 k) | B | 9.7/44.5 |
| R505 | 7030003440 | S.RES ERJ3GEYJ 102 V (1 k) | T | 9.3/42.5 |
| R506 | 7030003440 | S.RES ERJ3GEYJ 102 V (1 k) | T | 3.7/28.1 |
| R507 | 7030003440 | S.RES ERJ3GEYJ 102 V (1 k) | B | 4.4/28 |
| R508 | 7030003440 | S.RES ERJ3GEYJ 102 V (1 k) | T | 12.9/30.8 |
| R509 | 7030003360 | S.RES ERJ3GEYJ 221 V (220) | T | 31.1/34.8 |
| R510 | 7030003360 | S.RES ERJ3GEYJ 221 V (220) | T | 32.2/21.9 |
| R535 | 7030003360 | S.RES ERJ3GEYJ 221 V (220) | T | 26.4/21.9 |
| R536 | 7030003360 | S.RES ERJ3GEYJ 221 V (220) | T | 25.7/19 |
| R537 | 7030003360 | S.RES ERJ3GEYJ 221 V (220) | T | 23.6/21.9 |
| R538 | 7030003360 | S.RES ERJ3GEYJ 221 V (220) | T | 24.3/19 |
| R539 | 7030003360 | S.RES ERJ3GEYJ 221 V (220) | T | 25/21.8 |
| R540 | 7030003360 | S.RES ERJ3GEYJ 221 V (220) | T | 30.1/19 |

## [DIGSEL UNIT]

| REF NO. | ORDER NO. | DESCRIPTION | M. | H/V LOCATION |
|---|---|---|---|---|
| R541 | 7030003360 | S.RES ERJ3GEYJ 221 V (220) | T | 29.4/21.9 |
| R542 | 7030003360 | S.RES ERJ3GEYJ 221 V (220) | T | 28.7/19 |
| R543 | 7030003360 | S.RES ERJ3GEYJ 221 V (220) | T | 27.9/21.9 |
| R544 | 7030003360 | S.RES ERJ3GEYJ 221 V (220) | T | 27.2/19 |
| R545 | 7030003360 | S.RES ERJ3GEYJ 221 V (220) | T | 30.8/21.9 |
| R546 | 7030003360 | S.RES ERJ3GEYJ 221 V (220) | T | 31.5/19 |
| R547 | 7030003360 | S.RES ERJ3GEYJ 221 V (220) | T | 18/21.9 |
| R548 | 7030003360 | S.RES ERJ3GEYJ 221 V (220) | T | 17.3/19.1 |
| R549 | 7030003360 | S.RES ERJ3GEYJ 221 V (220) | T | 15.2/21.9 |
| R550 | 7030003360 | S.RES ERJ3GEYJ 221 V (220) | T | 16.6/21.9 |
| R551 | 7030003360 | S.RES ERJ3GEYJ 221 V (220) | T | 15.9/19.1 |
| R552 | 7030003360 | S.RES ERJ3GEYJ 221 V (220) | T | 20.1/19.2 |
| R553 | 7030003360 | S.RES ERJ3GEYJ 221 V (220) | T | 19.4/21.9 |
| R554 | 7030003360 | S.RES ERJ3GEYJ 221 V (220) | T | 18.7/19.1 |
| R555 | 7030003360 | S.RES ERJ3GEYJ 221 V (220) | T | 20.9/21.9 |
| R556 | 7030003360 | S.RES ERJ3GEYJ 221 V (220) | T | 21.6/19.2 |
| R557 | 7030003360 | S.RES ERJ3GEYJ 221 V (220) | T | 22.3/21.9 |
| R558 | 7030003360 | S.RES ERJ3GEYJ 221 V (220) | T | 23.5/34.2 |
| R600 | 7030000010 | S.RES MCR10EZHJ JPW | B | 30.9/33.9 |
| R604 | 7030003560 | S.RES ERJ3GEYJ 103 V (10 k) | B | 145.1/17.1 |
| R605 | 7030003560 | S.RES ERJ3GEYJ 103 V (10 k) | B | 129.1/17.1 |
| R701 | 7030000380 | S.RES MCR10EZHJ 1 k | T | 53.2/20.4 |
| R702 | 7030000290 | S.RES MCR10EZHJ 180 | T | 51.6/15.9 |
| R703 | 7030000220 | S.RES MCR10EZHJ 47 | T | 51.6/13.8 |
| R704 | 7030003360 | S.RES ERJ3GEYJ 221 V (220) | T | 52.9/31.9 |
| R705 | 7030003350 | S.RES ERJ3GEYJ 181 V (180) | B | 49.4/9 |
| R706 | 7030003370 | S.RES ERJ3GEYJ 271 V (270) | B | 42.4/10.1 |
| R707 | 7030003560 | S.RES ERJ3GEYJ 103 V (10 k) | T | 51.3/12.2 |
| R708 | 7030000200 | S.RES MCR10EZHJ 33 | T | 43.8/25.6 |
| R709 | 7030003240 | S.RES ERJ3GEYJ 220 V (22) | T | 46.5/19.8 |
| R710 | 7030003370 | S.RES ERJ3GEYJ 271 V (270) | B | 45.6/19.4 |
| R711 | 7030003370 | S.RES ERJ3GEYJ 271 V (270) | B | 45.6/21 |
| R713 | 7030000220 | S.RES MCR10EZHJ 47 | B | 38.8/27.4 |
| R714 | 7030003460 | S.RES ERJ3GEYJ 152 V (1.5 k) | T | 53.5/29.2 |
| R715 | 7030003460 | S.RES ERJ3GEYJ 152 V (1.5 k) | T | 51.6/30 |
| R716 | 7030003680 | S.RES ERJ3GEYJ 104 V (100 k) | B | 14.5/15.5 |
| | | | | |
| C1 | 4030011600 | S.CER C1608 JB 1E 104K-T | B | 15.2/55.4 |
| C2 | 4030011600 | S.CER C1608 JB 1E 104K-T | T | 7.9/31.8 |
| C4 | 4030011600 | S.CER C1608 JB 1E 104K-T | T | 31.8/50.7 |
| C5 | 4030011600 | S.CER C1608 JB 1E 104K-T | T | 16/51.6 |
| C21 | 4030006880 | S.CER C1608 JB 1H 472K-T | B | 30.4/45.9 |
| C35 | 4030006880 | S.CER C1608 JB 1H 472K-T | T | 32.1/65.3 |
| C51 | 4030006880 | S.CER C1608 JB 1H 472K-T | B | 64.8/57.2 |
| C52 | 4030006880 | S.CER C1608 JB 1H 472K-T | T | 57.6/45.8 |
| C53 | 4030006880 | S.CER C1608 JB 1H 472K-T | T | 51.5/59.2 |
| C54 | 4030006880 | S.CER C1608 JB 1H 472K-T | T | 87.3/72.3 |
| C55 | 4030006880 | S.CER C1608 JB 1H 472K-T | B | 67.1/63.5 |
| C56 | 4030006880 | S.CER C1608 JB 1H 472K-T | T | 66.5/54.9 |
| C57 | 4030006880 | S.CER C1608 JB 1H 472K-T | B | 66.2/45.6 |
| C58 | 4030006880 | S.CER C1608 JB 1H 472K-T | T | 114.3/50.4 |
| C59 | 4030006880 | S.CER C1608 JB 1H 472K-T | T | 90.4/51.4 |
| C60 | 4030006880 | S.CER C1608 JB 1H 472K-T | T | 90.4/54.4 |
| C61 | 4030006880 | S.CER C1608 JB 1H 472K-T | T | 114.3/53.7 |
| C62 | 4030006880 | S.CER C1608 JB 1H 472K-T | T | 138.2/51.1 |
| C63 | 4030006880 | S.CER C1608 JB 1H 472K-T | T | 138.2/54.4 |
| C64 | 4030006880 | S.CER C1608 JB 1H 472K-T | T | 162.1/50.8 |
| C65 | 4030006880 | S.CER C1608 JB 1H 472K-T | T | 162.1/53.9 |
| C66 | 4030006880 | S.CER C1608 JB 1H 472K-T | B | 182.5/47.7 |
| C67 | 4030006880 | S.CER C1608 JB 1H 472K-T | T | 114.3/57.2 |
| C68 | 4030006880 | S.CER C1608 JB 1H 472K-T | T | 88.3/63 |
| C69 | 4030006880 | S.CER C1608 JB 1H 472K-T | B | 183.7/64.8 |
| C70 | 4030006880 | S.CER C1608 JB 1H 472K-T | T | 162.1/60.2 |
| C71 | 4030006880 | S.CER C1608 JB 1H 472K-T | T | 162.1/57.3 |
| C72 | 4030006880 | S.CER C1608 JB 1H 472K-T | T | 138.2/59.5 |
| C73 | 4030006880 | S.CER C1608 JB 1H 472K-T | T | 135.8/63 |
| C74 | 4030006880 | S.CER C1608 JB 1H 472K-T | T | 114.3/60.4 |
| C75 | 4030006880 | S.CER C1608 JB 1H 472K-T | T | 90.5/59.6 |
| C101 | 4030011340 | S.CER C1608 CH 1H 471J-T | T | 68.2/68.4 |
| C102 | 4030011280 | S.CER C1608 CH 1H 271J-T | T | 59.5/69.2 |
| C103 | 4030011280 | S.CER C1608 CH 1H 271J-T | T | 60.5/56.7 |
| C104 | 4030007130 | S.CER C1608 CH 1H 101J-T | T | 57.7/52.7 |
| C105 | 4030006940 | S.CER C1608 CH 1H 030C-T | B | 65.7/51.9 |
| C106 | 4030007150 | S.CER C1608 CH 1H 151J-T | B | 56.4/70.2 |
| C107 | 4030007150 | S.CER C1608 CH 1H 151J-T | B | 60.3/70.6 |
| C108 | 4030007150 | S.CER C1608 CH 1H 151J-T | B | 62.4/70.6 |
| C109 | 4030007150 | S.CER C1608 CH 1H 151J-T | B | 56.4/68.8 |
| C110 | 4030009520 | S.CER C1608 CH 1H 020B-T | T | 77.2/69.1 |
| C111 | 4030009550 | S.CER C1608 CH 1H 2R5B-T | T | 77.2/67.8 |
| C113 | 4030007000 | S.CER C1608 CH 1H 090D-T | T | 73.7/58.9 |
| C114 | 4030007040 | S.CER C1608 CH 1H 180J-T | T | 71.7/59.5 |
| C115 | 4030007040 | S.CER C1608 CH 1H 180J-T | T | 70.4/59.5 |
| C116 | 4030007040 | S.CER C1608 CH 1H 180J-T | T | 69.1/59.5 |
| C117 | 4030007070 | S.CER C1608 CH 1H 330J-T | T | 77.2/70.4 |
| C118 | 4030007090 | S.CER C1608 CH 1H 470J-T | B | 76.7/59.8 |
| C119 | 4030007040 | S.CER C1608 CH 1H 180J-T | B | 66.1/48.1 |
| C120 | 4030007040 | S.CER C1608 CH 1H 180J-T | B | 66.1/49.8 |
| C121 | 4030007040 | S.CER C1608 CH 1H 180J-T | B | 74.4/59.7 |
| C122 | 4030007000 | S.CER C1608 CH 1H 090D-T | B | 74.3/70.3 |
| C124 | 4030009520 | S.CER C1608 CH 1H 020B-T | B | 77.4/68.9 |
| C125 | 4030009550 | S.CER C1608 CH 1H 2R5B-T | B | 76.1/68.9 |

M.=Mounted side (T: Mounted on the Top side, B: Mounted on the Bottom side)
S.=Surface mount

## [DIGSEL UNIT]

| REF NO. | ORDER NO. | DESCRIPTION | M. | H/V LOCATION |
|---|---|---|---|---|
| C126 | 4030008360 | S.CER C1608 UJ 1H 101J-T | B | 124.5/63.3 |
| C128 | 4030009500 | S.CER C1608 CH 1H 0R5B-T | B | 107.2/55.4 |
| C129 | 4030009510 | S.CER C1608 CH 1H 010B-T | B | 83.2/55.8 |
| C130 | 4030009520 | S.CER C1608 CH 1H 020B-T | B | 97.6/55.5 |
| C131 | 4030009910 | S.CER C1608 CH 1H 040B-T | B | 121.5/55.6 |
| C132 | 4030006990 | S.CER C1608 CH 1H 080D-T | B | 131/55.6 |
| C133 | 4030007040 | S.CER C1608 CH 1H 180J-T | B | 145.4/55.7 |
| C134 | 4030008750 | S.CER C1608 CH 1H 360J-T | B | 154.9/55.7 |
| C135 | 4030007110 | S.CER C1608 CH 1H 680J-T | B | 169.3/55.7 |
| C136 | 4030007140 | S.CER C1608 CH 1H 121J-T | B | 178.8/55.7 |
| C137 | 4030007140 | S.CER C1608 CH 1H 121J-T | B | 107.4/63.8 |
| C138 | 4030007130 | S.CER C1608 CH 1H 101J-T | B | 107.4/62.5 |
| C139 | 4030007160 | S.CER C1608 CH 1H 181J-T | B | 83.6/62.7 |
| C140 | 4030007160 | S.CER C1608 CH 1H 181J-T | B | 83.6/64.5 |
| C141 | 4030008330 | S.CER C1608 UJ 1H 560J-T | B | 177.2/63.2 |
| C142 | 4030008330 | S.CER C1608 UJ 1H 560J-T | B | 169.3/63.2 |
| C143 | 4030007090 | S.CER C1608 CH 1H 470J-T | B | 155.2/63.2 |
| C201 | 4030011600 | S.CER C1608 JB 1E 104K-T | B | 49.1/57.2 |
| C202 | 4030006900 | S.CER C1608 JB 1H 103K-T | T | 57.7/55.4 |
| C203 | 4030011600 | S.CER C1608 JB 1E 104K-T | B | 50.4/46.3 |
| C204 | 4030011600 | S.CER C1608 JB 1E 104K-T | B | 53.2/45.4 |
| C205 | 4030011600 | S.CER C1608 JB 1E 104K-T | B | 43.4/59.6 |
| C206 | 4030011600 | S.CER C1608 JB 1E 104K-T | B | 44.4/54.6 |
| C207 | 4030006880 | S.CER C1608 JB 1H 472K-T | B | 41.1/59.6 |
| C208 | 4030007010 | S.CER C1608 CH 1H 100D-T | T | 45/56.1 |
| C209 | 4030006880 | S.CER C1608 JB 1H 472K-T | B | 38.1/59.6 |
| C210 | 4030006900 | S.CER C1608 JB 1H 103K-T | B | 45.2/52.1 |
| C211 | 4030009000 | S.CER C2012 JB 1C 224K-T | B | 45.6/47.9 |
| C212 | 4030006880 | S.CER C1608 JB 1H 472K-T | B | 52.4/62 |
| C213 | 4030006880 | S.CER C1608 JB 1H 472K-T | T | 54.5/45.1 |
| C214 | 4030006880 | S.CER C1608 JB 1H 472K-T | B | 48.5/46.3 |
| C215 | 4030006880 | S.CER C1608 JB 1H 472K-T | T | 43.8/68.4 |
| C501 | 4030011600 | S.CER C1608 JB 1E 104K-T | B | 27/25.3 |
| C504 | 4030011600 | S.CER C1608 JB 1E 104K-T | T | 30.8/33.4 |
| C505 | 4030011600 | S.CER C1608 JB 1E 104K-T | T | 19.5/33.7 |
| C521 | 4030006880 | S.CER C1608 JB 1H 472K-T | B | 28/35 |
| C535 | 4030006880 | S.CER C1608 JB 1H 472K-T | T | 33.5/21.9 |
| C551 | 4030006880 | S.CER C1608 JB 1H 472K-T | B | 63.6/10.9 |
| C552 | 4030006880 | S.CER C1608 JB 1H 472K-T | T | 61.5/22.9 |
| C553 | 4030006880 | S.CER C1608 JB 1H 472K-T | B | 58/10.2 |
| C554 | 4030006880 | S.CER C1608 JB 1H 472K-T | T | 90.3/12.9 |
| C555 | 4030006880 | S.CER C1608 JB 1H 472K-T | B | 68.8/12.6 |
| C556 | 4030006880 | S.CER C1608 JB 1H 472K-T | B | 69.8/27.9 |
| C557 | 4030006880 | S.CER C1608 JB 1H 472K-T | B | 67.4/32.9 |
| C558 | 4030006880 | S.CER C1608 JB 1H 472K-T | T | 114.3/25.9 |
| C559 | 4030006880 | S.CER C1608 JB 1H 472K-T | T | 90.4/27.1 |
| C560 | 4030006880 | S.CER C1608 JB 1H 472K-T | T | 90.4/30.5 |
| C561 | 4030006880 | S.CER C1608 JB 1H 472K-T | T | 114.3/29.9 |
| C562 | 4030006880 | S.CER C1608 JB 1H 472K-T | T | 138.2/27.1 |
| C563 | 4030006880 | S.CER C1608 JB 1H 472K-T | T | 138.2/30.5 |
| C564 | 4030006880 | S.CER C1608 JB 1H 472K-T | T | 162.1/27.2 |
| C565 | 4030006880 | S.CER C1608 JB 1H 472K-T | T | 162.1/30.4 |
| C566 | 4030006880 | S.CER C1608 JB 1H 472K-T | B | 180.9/33.5 |
| C567 | 4030006880 | S.CER C1608 JB 1H 472K-T | T | 109.8/17.8 |
| C568 | 4030006880 | S.CER C1608 JB 1H 472K-T | T | 90.4/19.5 |
| C569 | 4030006880 | S.CER C1608 JB 1H 472K-T | B | 181.8/17.1 |
| C570 | 4030006880 | S.CER C1608 JB 1H 472K-T | T | 162.1/22.4 |
| C571 | 4030006880 | S.CER C1608 JB 1H 472K-T | T | 158.5/17.6 |
| C572 | 4030006880 | S.CER C1608 JB 1H 472K-T | T | 138.2/23.1 |
| C573 | 4030006880 | S.CER C1608 JB 1H 472K-T | T | 134.8/17.5 |
| C574 | 4030006880 | S.CER C1608 JB 1H 472K-T | T | 114.3/20.6 |
| C575 | 4030006880 | S.CER C1608 JB 1H 472K-T | T | 90.4/23.3 |
| C601 | 4030011340 | S.CER C1608 CH 1H 471J-T | B | 66/22.5 |
| C602 | 4030011280 | S.CER C1608 CH 1H 271J-T | B | 65.2/26.7 |
| C603 | 4030011280 | S.CER C1608 CH 1H 271J-T | T | 59.1/35.6 |
| C604 | 4030007130 | S.CER C1608 CH 1H 101J-T | T | 57.7/33 |
| C605 | 4030006940 | S.CER C1608 CH 1H 030C-T | T | 57.2/29 |
| C606 | 4030007150 | S.CER C1608 CH 1H 151J-T | T | 55.6/30.7 |
| C607 | 4030007150 | S.CER C1608 CH 1H 151J-T | T | 57.2/25.4 |
| C608 | 4030007150 | S.CER C1608 CH 1H 151J-T | T | 57.2/23.8 |
| C609 | 4030007150 | S.CER C1608 CH 1H 151J-T | T | 56.8/22.5 |
| C610 | 4030009520 | S.CER C1608 CH 1H 020B-T | B | 77.3/11.3 |
| C611 | 4030009550 | S.CER C1608 CH 1H 2R5B-T | B | 76/11.3 |
| C613 | 4030007000 | S.CER C1608 CH 1H 090D-T | B | 73.8/12.5 |
| C614 | 4030007040 | S.CER C1608 CH 1H 180J-T | B | 73.7/21.1 |
| C615 | 4030007040 | S.CER C1608 CH 1H 180J-T | B | 73.9/28.2 |
| C616 | 4030007040 | S.CER C1608 CH 1H 180J-T | B | 73.9/29.7 |
| C617 | 4030007070 | S.CER C1608 CH 1H 330J-T | B | 76/19.4 |
| C618 | 4030007090 | S.CER C1608 CH 1H 470J-T | T | 75.5/20.7 |
| C619 | 4030007040 | S.CER C1608 CH 1H 180J-T | T | 65.6/35.3 |
| C620 | 4030007040 | S.CER C1608 CH 1H 180J-T | T | 65.7/36.7 |
| C621 | 4030007040 | S.CER C1608 CH 1H 180J-T | T | 73.7/28.3 |
| C622 | 4030007000 | S.CER C1608 CH 1H 090D-T | T | 73.2/20.2 |
| C624 | 4030009520 | S.CER C1608 CH 1H 020B-T | T | 76.9/10.6 |
| C625 | 4030009550 | S.CER C1608 CH 1H 2R5B-T | T | 76.9/12 |
| C626 | 4030008360 | S.CER C1608 UJ 1H 101J-T | B | 124.5/17.4 |
| C628 | 4030009500 | S.CER C1608 CH 1H 0R5B-T | B | 107.4/25.3 |
| C629 | 4030009510 | S.CER C1608 CH 1H 010B-T | B | 83.3/25.5 |
| C630 | 4030009520 | S.CER C1608 CH 1H 020B-T | B | 97.8/25.3 |
| C631 | 4030009910 | S.CER C1608 CH 1H 040B-T | B | 121.2/25.3 |
| C632 | 4030006990 | S.CER C1608 CH 1H 080D-T | B | 131.3/25.3 |
| C633 | 4030007040 | S.CER C1608 CH 1H 180J-T | B | 145.2/25.3 |

## [DIGSEL UNIT]

| REF NO. | ORDER NO. | DESCRIPTION | M. | H/V LOCATION |
|---|---|---|---|---|
| C634 | 4030008750 | S.CER C1608 CH 1H 360J-T | B | 155.2/25.3 |
| C635 | 4030007110 | S.CER C1608 CH 1H 680J-T | B | 169/25.3 |
| C636 | 4030007140 | S.CER C1608 CH 1H 121J-T | B | 179.1/25.3 |
| C637 | 4030007140 | S.CER C1608 CH 1H 121J-T | B | 107.4/18.3 |
| C638 | 4030007130 | S.CER C1608 CH 1H 101J-T | B | 107.4/16.5 |
| C639 | 4030007160 | S.CER C1608 CH 1H 181J-T | B | 83.9/18.1 |
| C640 | 4030007160 | S.CER C1608 CH 1H 181J-T | B | 84.7/16.3 |
| C641 | 4030008330 | S.CER C1608 UJ 1H 560J-T | B | 177/17.9 |
| C642 | 4030008330 | S.CER C1608 UJ 1H 560J-T | B | 169/18 |
| C643 | 4030007090 | S.CER C1608 CH 1H 470J-T | B | 155.5/18 |
| C701 | 4030011600 | S.CER C1608 JB 1E 104K-T | T | 52.3/17.7 |
| C702 | 4030006900 | S.CER C1608 JB 1H 103K-T | T | 54.6/27.3 |
| C703 | 4030011600 | S.CER C1608 JB 1E 104K-T | B | 40.3/10.4 |
| C704 | 4030011600 | S.CER C1608 JB 1E 104K-T | B | 52.1/9.8 |
| C705 | 4030011600 | S.CER C1608 JB 1E 104K-T | B | 44/28.1 |
| C706 | 4030011600 | S.CER C1608 JB 1E 104K-T | T | 45.1/22.6 |
| C707 | 4030006880 | S.CER C1608 JB 1H 472K-T | B | 42.7/28.1 |
| C708 | 4030007010 | S.CER C1608 CH 1H 100D-T | T | 46.5/22.7 |
| C709 | 4030006880 | S.CER C1608 JB 1H 472K-T | B | 40.6/28.9 |
| C710 | 4030006900 | S.CER C1608 JB 1H 103K-T | B | 45.6/22.7 |
| C711 | 4030009000 | S.CER C2012 JB 1C 224K-T | B | 45.7/24.4 |
| C712 | 4030006880 | S.CER C1608 JB 1H 472K-T | T | 54.8/32.3 |
| C713 | 4030006880 | S.CER C1608 JB 1H 472K-T | B | 52.1/7.9 |
| C714 | 4030006880 | S.CER C1608 JB 1H 472K-T | B | 42.4/6.5 |
| C715 | 4030006880 | S.CER C1608 JB 1H 472K-T | T | 54.2/34.3 |
| RL2 | 6330001750 | RLY FTR-B4CA012Z | | |
| RL21 | 6330001750 | RLY FTR-B4CA012Z | | |
| RL51 | 6330001750 | RLY FTR-B4CA012Z | | |
| RL52 | 6330001750 | RLY FTR-B4CA012Z | | |
| RL53 | 6330001750 | RLY FTR-B4CA012Z | | |
| RL54 | 6330001750 | RLY FTR-B4CA012Z | | |
| RL55 | 6330001750 | RLY FTR-B4CA012Z | | |
| RL56 | 6330001750 | RLY FTR-B4CA012Z | | |
| RL57 | 6330001750 | RLY FTR-B4CA012Z | | |
| RL58 | 6330001750 | RLY FTR-B4CA012Z | | |
| RL59 | 6330001750 | RLY FTR-B4CA012Z | | |
| RL60 | 6330001750 | RLY FTR-B4CA012Z | | |
| RL61 | 6330001750 | RLY FTR-B4CA012Z | | |
| RL62 | 6330001750 | RLY FTR-B4CA012Z | | |
| RL63 | 6330001750 | RLY FTR-B4CA012Z | | |
| RL64 | 6330001750 | RLY FTR-B4CA012Z | | |
| RL65 | 6330001750 | RLY FTR-B4CA012Z | | |
| RL66 | 6330001750 | RLY FTR-B4CA012Z | | |
| RL67 | 6330001750 | RLY FTR-B4CA012Z | | |
| RL69 | 6330001750 | RLY FTR-B4CA012Z | | |
| RL70 | 6330001750 | RLY FTR-B4CA012Z | | |
| RL71 | 6330001750 | RLY FTR-B4CA012Z | | |
| RL72 | 6330001750 | RLY FTR-B4CA012Z | | |
| RL73 | 6330001750 | RLY FTR-B4CA012Z | | |
| RL74 | 6330001750 | RLY FTR-B4CA012Z | | |
| RL75 | 6330001750 | RLY FTR-B4CA012Z | | |
| RL76 | 6330001750 | RLY FTR-B4CA012Z | | |
| RL201 | 6330001750 | RLY FTR-B4CA012Z | | |
| RL502 | 6330001750 | RLY FTR-B4CA012Z | | |
| RL521 | 6330001750 | RLY FTR-B4CA012Z | | |
| RL551 | 6330001750 | RLY FTR-B4CA012Z | | |
| RL552 | 6330001750 | RLY FTR-B4CA012Z | | |
| RL553 | 6330001750 | RLY FTR-B4CA012Z | | |
| RL554 | 6330001750 | RLY FTR-B4CA012Z | | |
| RL555 | 6330001750 | RLY FTR-B4CA012Z | | |
| RL556 | 6330001750 | RLY FTR-B4CA012Z | | |
| RL557 | 6330001750 | RLY FTR-B4CA012Z | | |
| RL558 | 6330001750 | RLY FTR-B4CA012Z | | |
| RL559 | 6330001750 | RLY FTR-B4CA012Z | | |
| RL560 | 6330001750 | RLY FTR-B4CA012Z | | |
| RL561 | 6330001750 | RLY FTR-B4CA012Z | | |
| RL562 | 6330001750 | RLY FTR-B4CA012Z | | |
| RL563 | 6330001750 | RLY FTR-B4CA012Z | | |
| RL564 | 6330001750 | RLY FTR-B4CA012Z | | |
| RL565 | 6330001750 | RLY FTR-B4CA012Z | | |
| RL566 | 6330001750 | RLY FTR-B4CA012Z | | |
| RL567 | 6330001750 | RLY FTR-B4CA012Z | | |
| RL569 | 6330001750 | RLY FTR-B4CA012Z | | |
| RL570 | 6330001750 | RLY FTR-B4CA012Z | | |
| RL571 | 6330001750 | RLY FTR-B4CA012Z | | |
| RL572 | 6330001750 | RLY FTR-B4CA012Z | | |
| RL573 | 6330001750 | RLY FTR-B4CA012Z | | |
| RL574 | 6330001750 | RLY FTR-B4CA012Z | | |
| RL575 | 6330001750 | RLY FTR-B4CA012Z | | |
| RL576 | 6330001750 | RLY FTR-B4CA012Z | | |
| RL701 | 6330001750 | RLY FTR-B4CA012Z | | |
| J1 | 6510007020 | CNR TMP-J01X-V6 | | |
| J2 | 6510007020 | CNR TMP-J01X-V6 | | |
| J10 | 6510020080 | S.CNR 52808-2091 | T | 4.5/40.5 |
| J10 | 6510020081 | S.CNR 52808-2071 (2090) | T | 4.5/40.5 |
| J501 | 6510007020 | CNR TMP-J01X-V6 | | |
| J502 | 6510007020 | CNR TMP-J01X-V6 | | |

M.=Mounted side (T: Mounted on the Top side, B: Mounted on the Bottom side)
S.=Surface mount

## [NETWORK BOARD]

| REF NO. | ORDER NO. | DESCRIPTION | M. | H/V LOCATION |
|---|---|---|---|---|
| Q300 | 1520000561 | S.TR 2SB1123 T-TD-E | T | 205.7/10.5 |
| Q301 | 1590000680 | S.TR DTC114EUA T106 | T | 201.4/9.1 |
| L50 | 6110003950 | COL LA-598 | | |
| L60 | 6110003910 | COL LA-593 | | |
| L70 | 6110003050 | COL LA-492 | | |
| L80 | 6110003050 | COL LA-492 | | |
| L90 | 6110003060 | COL LA-493 | | |
| L100 | 6110003070 | COL LA-494 | | |
| L110 | 6110003920 | COL LA-594 | | |
| L120 | 6140004460 | COL LR-504 | | |
| L130 | 6140004470 | COL LR-505 | | |
| L131 | 6140004470 | COL LR-505 | | |
| L300 | 6180000990 | COL LAL 04NA 101K | | |
| R300 | 7030000420 | S.RES MCR10EZHJ 2.2 k | T | 202.8/6.9 |
| R301 | 7030000420 | S.RES MCR10EZHJ 2.2 k | T | 201.5/11.3 |
| R302 | 7030000420 | S.RES MCR10EZHJ 2.2 k | T | 206.2/6.9 |
| R303 | 7030009800 | S.RES ERJ12YJ121U (120) | T | 209.7/5 |
| C1 | 4620000120 | VAR UV44 150P | | |
| C2 | 4620000120 | VAR UV44 150P | | |
| C3 | 4010007580 | CER HT20SJ SL 201J 3KV | | |
| C4 | 4010007580 | CER HT20SJ SL 201J 3KV | | |
| C5 | 4010007580 | CER HT20SJ SL 201J 3KV | | |
| C6 | 4010007580 | CER HT20SJ SL 201J 3KV | | |
| C7 | 4010007580 | CER HT20SJ SL 201J 3KV | | |
| C8 | 4010007580 | CER HT20SJ SL 201J 3KV | | |
| C9 | 4010007580 | CER HT20SJ SL 201J 3KV | | |
| C10 | 4010007580 | CER HT20SJ SL 201J 3KV | | |
| C20 | 4010007570 | CER HT15SJ SL 151J 3KV | | |
| C21 | 4010007570 | CER HT15SJ SL 151J 3KV | | |
| C22 | 4010007570 | CER HT15SJ SL 151J 3KV | | |
| C23 | 4010007570 | CER HT15SJ SL 151J 3KV | | |
| C24 | 4010007570 | CER HT15SJ SL 151J 3KV | | |
| C25 | 4010007570 | CER HT15SJ SL 151J 3KV | | |
| C26 | 4010007570 | CER HT15SJ SL 151J 3KV | | |
| C27 | 4010007570 | CER HT15SJ SL 151J 3KV | | |
| C30 | 4010007550 | CER HT11SJ SL 820J 3KV | | |
| C31 | 4010007550 | CER HT11SJ SL 820J 3KV | | |
| C32 | 4010007550 | CER HT11SJ SL 820J 3KV | | |
| C33 | 4010007550 | CER HT11SJ SL 820J 3KV | | |
| C34 | 4010007550 | CER HT11SJ SL 820J 3KV | | |
| C35 | 4010007550 | CER HT11SJ SL 820J 3KV | | |
| C36 | 4010007550 | CER HT11SJ SL 820J 3KV | | |
| C37 | 4010007550 | CER HT11SJ SL 820J 3KV | | |
| C40 | 4010008550 | CER DEA1X3F390JC3B | | |
| C41 | 4010008550 | CER DEA1X3F390JC3B | | |
| C42 | 4010008550 | CER DEA1X3F390JC3B | | |
| C43 | 4010008550 | CER DEA1X3F390JC3B | | |
| C44 | 4010008550 | CER DEA1X3F390JC3B | | |
| C45 | 4010008550 | CER DEA1X3F390JC3B | | |
| C46 | 4010008550 | CER DEA1X3F390JC3B | | |
| C47 | 4010008550 | CER DEA1X3F390JC3B | | |
| C50 | 4030006880 | S.CER C1608 JB 1H 472K-T | T | 140.7/12 |
| C60 | 4030006880 | S.CER C1608 JB 1H 472K-T | T | 154.1/12 |
| C70 | 4030006880 | S.CER C1608 JB 1H 472K-T | T | 167.5/16.1 |
| C80 | 4030006880 | S.CER C1608 JB 1H 472K-T | T | 181.9/21.5 |
| C90 | 4030006880 | S.CER C1608 JB 1H 472K-T | T | 195.3/21.3 |
| C100 | 4030006880 | S.CER C1608 JB 1H 472K-T | T | 204.4/20.7 |
| C110 | 4030006880 | S.CER C1608 JB 1H 472K-T | T | 205.8/20.7 |
| C120 | 4030006880 | S.CER C1608 JB 1H 472K-T | T | 207.2/20.6 |
| C202 | 4030006880 | S.CER C1608 JB 1H 472K-T | T | 187.4/13.2 |
| C203 | 4030006880 | S.CER C1608 JB 1H 472K-T | T | 188.4/15.7 |
| C204 | 4030006880 | S.CER C1608 JB 1H 472K-T | T | 189.4/13.2 |
| C205 | 4030006880 | S.CER C1608 JB 1H 472K-T | T | 190.4/15.7 |
| C206 | 4030006880 | S.CER C1608 JB 1H 472K-T | T | 191.4/13.2 |
| C207 | 4030006880 | S.CER C1608 JB 1H 472K-T | T | 192.4/15.7 |
| C208 | 4030006880 | S.CER C1608 JB 1H 472K-T | T | 193.4/13.2 |
| C209 | 4030006880 | S.CER C1608 JB 1H 472K-T | T | 194.4/15.7 |
| C252 | 4030006880 | S.CER C1608 JB 1H 472K-T | T | 175.4/13.2 |
| C253 | 4030006880 | S.CER C1608 JB 1H 472K-T | T | 176.4/15.7 |
| C254 | 4030006880 | S.CER C1608 JB 1H 472K-T | T | 177.4/13.2 |
| C255 | 4030006880 | S.CER C1608 JB 1H 472K-T | T | 178.4/15.7 |
| C256 | 4030006880 | S.CER C1608 JB 1H 472K-T | T | 179.4/13.2 |
| C257 | 4030006880 | S.CER C1608 JB 1H 472K-T | T | 180.4/15.7 |
| C258 | 4030006880 | S.CER C1608 JB 1H 472K-T | T | 181.4/13.2 |
| C259 | 4030006880 | S.CER C1608 JB 1H 472K-T | T | 182.4/15.7 |
| C300 | 4030006880 | S.CER C1608 JB 1H 472K-T | T | 184.4/13.2 |
| C301 | 4030006880 | S.CER C1608 JB 1H 472K-T | T | 210.5/10.1 |
| RL10 | 6330001200 | RLY VS-12MBU-UC | | |
| RL11 | 6330001200 | RLY VS-12MBU-UC | | |
| RL20 | 6330001200 | RLY VS-12MBU-UC | | |
| RL21 | 6330001200 | RLY VS-12MBU-UC | | |
| RL30 | 6330001200 | RLY VS-12MBU-UC | | |
| RL31 | 6330001200 | RLY VS-12MBU-UC | | |
| RL40 | 6330001200 | RLY VS-12MBU-UC | | |

## [NETWORK BOARD]

| REF NO. | ORDER NO. | DESCRIPTION | M. | H/V LOCATION |
|---|---|---|---|---|
| RL41 | 6330001200 | RLY VS-12MBU-UC | | |
| RL50 | 6330001460 | RLY FTR-F1CA012V | | |
| RL60 | 6330001200 | RLY VS-12MBU-UC | | |
| RL70 | 6330001200 | RLY VS-12MBU-UC | | |
| RL80 | 6330001200 | RLY VS-12MBU-UC | | |
| RL90 | 6330001200 | RLY VS-12MBU-UC | | |
| RL100 | 6330001200 | RLY VS-12MBU-UC | | |
| RL110 | 6330001200 | RLY VS-12MBU-UC | | |
| RL120 | 6330001200 | RLY VS-12MBU-UC | | |
| J1 | 6510021561 | S.CNR 52808-2470 (2490) | T | 184.9/7.4 |
| J2 | 6510017930 | CNR 1771P145-20 | | |
| J3 | 6510017930 | CNR 1771P145-20 | | |
| J4 | 6510003520 | CNR S04B-EH-S | | |

## [FILTER UNIT]

| REF NO. | ORDER NO. | DESCRIPTION | M. | H/V LOCATION |
|---|---|---|---|---|
| D402 | 1750000271 | S.DIO 1SS301 (TE85R,F) | T | 11.8/24.3 |
| D452 | 1750000271 | S.DIO 1SS301 (TE85R,F) | T | 32/20.5 |
| D502 | 1750000271 | S.DIO 1SS301 (TE85R,F) | T | 54.8/30.3 |
| D552 | 1750000271 | S.DIO 1SS301 (TE85R,F) | T | 155.6/29.1 |
| D602 | 1750000271 | S.DIO 1SS301 (TE85R,F) | T | 130.1/20.3 |
| D652 | 1750000271 | S.DIO 1SS301 (TE85R,F) | T | 93.8/33 |
| D702 | 1750000271 | S.DIO 1SS301 (TE85R,F) | T | 69.6/20.3 |
| D752 | 1750000271 | S.DIO 1SS301 (TE85R,F) | T | 113.1/33 |
| D802 | 1750000271 | S.DIO 1SS301 (TE85R,F) | T | 173.6/25.9 |
| L401 | 6200005131 | S.COL NLC453232T-101K-PF | T | 25.4/136.7 |
| L402 | 6140004310 | COL LR-471 | | |
| L403 | 6140004300 | COL LR-470 | | |
| L404 | 6140004300 | COL LR-470 | | |
| L405 | 6200005131 | S.COL NLC453232T-101K-PF | T | 7.3/24.6 |
| L451 | 6200005131 | S.COL NLC453232T-101K-PF | T | 4.4/143.9 |
| L452 | 6140004270 | COL LR-467 | | |
| L453 | 6140004290 | COL LR-469 | | |
| L454 | 6140004290 | COL LR-469 | | |
| L455 | 6200005131 | S.COL NLC453232T-101K-PF | T | 28.4/29.9 |
| L501 | 6200005131 | S.COL NLC453232T-101K-PF | T | 46.3/133.8 |
| L502 | 6140004280 | COL LR-468 | | |
| L503 | 6140004270 | COL LR-467 | | |
| L504 | 6140004270 | COL LR-467 | | |
| L505 | 6200005131 | S.COL NLC453232T-101K-PF | T | 50.2/29.6 |
| L551 | 6200005131 | S.COL NLC453232T-101K-PF | T | 150.7/133.8 |
| L552 | 6140004260 | COL LR-466 | | |
| L553 | 6140004280 | COL LR-468 | | |
| L554 | 6140004280 | COL LR-468 | | |
| L555 | 6200005131 | S.COL NLC453232T-101K-PF | T | 151/29.7 |
| L601 | 6200005131 | S.COL NLC453232T-101K-PF | T | 129.9/133.8 |
| L602 | 6140004250 | COL LR-465 | | |
| L603 | 6140004240 | COL LR-464 | | |
| L604 | 6140004240 | COL LR-464 | | |
| L605 | 6200005131 | S.COL NLC453232T-101K-PF | T | 130.1/14.2 |
| L651 | 6200005131 | S.COL NLC453232T-101K-PF | T | 88.2/133.8 |
| L652 | 6140004200 | COL LR-463 | | |
| L653 | 6140004170 | COL LR-462 | | |
| L654 | 6140004170 | COL LR-462 | | |
| L655 | 6200005131 | S.COL NLC453232T-101K-PF | T | 92.3/29.8 |
| L701 | 6200005131 | S.COL NLC453232T-101K-PF | T | 67.2/133.8 |
| L702 | 6140004130 | COL LR-461 | | |
| L703 | 6140004070 | COL LR-460 | | |
| L704 | 6140004070 | COL LR-460 | | |
| L705 | 6200005131 | S.COL NLC453232T-101K-PF | T | 69.6/14.1 |
| L751 | 6200005131 | S.COL NLC453232T-101K-PF | T | 109.1/133.8 |
| L752 | 6110003900 | COL LA-592 | | |
| L753 | 6110003890 | COL LA-591 | | |
| L754 | 6110003890 | COL LA-591 | | |
| L755 | 6200005131 | S.COL NLC453232T-101K-PF | T | 111.4/29.8 |
| L801 | 6200001831 | S.COL NLV32T-100J | T | 165.9/163.4 |
| L802 | 6110003880 | COL LA-590 | | |
| L803 | 6110003870 | COL LA-589 | | |
| L804 | 6110003870 | COL LA-589 | | |
| L805 | 6200001831 | S.COL NLV32T-100J | T | 173.9/22.8 |
| C401 | 4030006880 | S.CER C1608 JB 1H 472K-T | T | 25.4/130.4 |
| C402 | 4010008200 | CER HM11TJ SL 331J 500V | | |
| C403 | 4010008200 | CER HM11TJ SL 331J 500V | | |
| C404 | 4010008300 | CER HM11TJ SL 391J 500V | | |
| C405 | 4010008300 | CER HM11TJ SL 391J 500V | | |
| C406 | 4010008210 | CER HM60TJ SL 560J 500V | | |
| C407 | 4010007590 | CER HM15SJ SL 681J 500V | | |
| C408 | 4010007590 | CER HM15SJ SL 681J 500V | | |

M.=Mounted side (T: Mounted on the Top side, B: Mounted on the Bottom side)
S.=Surface mount

## [FILTER UNIT]

| REF NO. | ORDER NO. | DESCRIPTION | M. | H/V LOCATION |
|---|---|---|---|---|
| C409 | 4010007590 | CER HM15SJ SL 681J 500V | | |
| C410 | 4010005870 | CER HM95SJ SL 221J 500V | | |
| C411 | 4010008280 | CER HM95TJ SL 221J 500V | | |
| C412 | 4010008370 | CER HM60TJ SL 150J 500V | | |
| C413 | 4010007590 | CER HM15SJ SL 681J 500V | | |
| C414 | 4010007590 | CER HM15SJ SL 681J 500V | | |
| C415 | 4010007590 | CER HM15SJ SL 681J 500V | | |
| C416 | 4010008300 | CER HM11TJ SL 391J 500V | | |
| C417 | 4010008230 | CER HM60TJ SL 820J 500V | | |
| C418 | 4010007590 | CER HM15SJ SL 681J 500V | | |
| C419 | 4010007590 | CER HM15SJ SL 681J 500V | | |
| C420 | 4030006880 | S.CER C1608 JB 1H 472K-T | T | 11.6/26.3 |
| C451 | 4030006880 | S.CER C1608 JB 1H 472K-T | T | 26.6/127.9 |
| C452 | 4010008290 | CER HM95TJ SL 271J 500V | | |
| C453 | 4010008280 | CER HM95TJ SL 221J 500V | | |
| C454 | 4010008240 | CER HM60TJ SL 101J 500V | | |
| C455 | 4010005810 | CER HM74SJ SL 111J 500V | | |
| C456 | 4010007490 | CER HM15SJ SL 561J 500V | | |
| C457 | 4010006410 | CER HM13SJ SL 471J 500V | | |
| C458 | 4010008250 | CER HM74TJ SL 121J 500V | | |
| C459 | 4010005810 | CER HM74SJ SL 111J 500V | | |
| C461 | 4010007490 | CER HM15SJ SL 561J 500V | | |
| C462 | 4010007490 | CER HM15SJ SL 561J 500V | | |
| C463 | 4010008340 | CER HM60TJ SL 270J 500V | | |
| C464 | 4010008320 | CER HM60TJ SL 390J 500V | | |
| C465 | 4010007490 | CER HM15SJ SL 561J 500V | | |
| C466 | 4010008220 | CER HM60TJ SL 680J 500V | | |
| C467 | 4030006880 | S.CER C1608 JB 1H 472K-T | T | 32.4/23.4 |
| C468 | 4010008230 | CER HM60TJ SL 820J 500V | | |
| C501 | 4030006880 | S.CER C1608 JB 1H 472K-T | T | 47.6/127.3 |
| C502 | 4010008280 | CER HM95TJ SL 221J 500V | | |
| C503 | 4010008260 | CER HM74TJ SL 151J 500V | | |
| C504 | 4010008280 | CER HM95TJ SL 221J 500V | | |
| C506 | 4010008200 | CER HM11TJ SL 331J 500V | | |
| C507 | 4010008280 | CER HM95TJ SL 221J 500V | | |
| C508 | 4010008280 | CER HM95TJ SL 221J 500V | | |
| C509 | 4010005810 | CER HM74SJ SL 111J 500V | | |
| C511 | 4010008300 | CER HM11TJ SL 391J 500V | | |
| C512 | 4010008300 | CER HM11TJ SL 391J 500V | | |
| C513 | 4010008260 | CER HM74TJ SL 151J 500V | | |
| C514 | 4010008320 | CER HM60TJ SL 390J 500V | | |
| C515 | 4010008280 | CER HM95TJ SL 221J 500V | | |
| C516 | 4010008280 | CER HM95TJ SL 221J 500V | | |
| C517 | 4030006880 | S.CER C1608 JB 1H 472K-T | T | 54.7/28.4 |
| C518 | 4010008340 | CER HM60TJ SL 270J 500V | | |
| C551 | 4030006880 | S.CER C1608 JB 1H 472K-T | T | 149.9/122.5 |
| C552 | 4010005860 | CER HM95SJ SL 201J 500V | | |
| C554 | 4010008230 | CER HM60TJ SL 820J 500V | | |
| C555 | 4010008370 | CER HM60TJ SL 150J 500V | | |
| C556 | 4010008290 | CER HM95TJ SL 271J 500V | | |
| C557 | 4010008290 | CER HM95TJ SL 271J 500V | | |
| C558 | 4010008320 | CER HM60TJ SL 390J 500V | | |
| C559 | 4010008330 | CER HM60TJ SL 330J 500V | | |
| C560 | 4010008340 | CER HM60TJ SL 270J 500V | | |
| C561 | 4010008200 | CER HM11TJ SL 331J 500V | | |
| C562 | 4010008290 | CER HM95TJ SL 271J 500V | | |
| C563 | 4010008330 | CER HM60TJ SL 330J 500V | | |
| C564 | 4010005650 | CER HM60SJ SL 200J 500V | | |
| C565 | 4010008280 | CER HM95TJ SL 221J 500V | | |
| C566 | 4010008350 | CER HM60TJ SL 220J 500V | | |
| C567 | 4030006880 | S.CER C1608 JB 1H 472K-T | T | 152.2/32.2 |
| C601 | 4030006880 | S.CER C1608 JB 1H 472K-T | T | 130.2/125 |
| C604 | 4010008230 | CER HM60TJ SL 820J 500V | | |
| C605 | 4010008370 | CER HM60TJ SL 150J 500V | | |
| C606 | 4010008280 | CER HM95TJ SL 221J 500V | | |
| C607 | 4010008220 | CER HM60TJ SL 680J 500V | | |
| C608 | 4010008350 | CER HM60TJ SL 220J 500V | | |
| C609 | 4010008340 | CER HM60TJ SL 270J 500V | | |
| C610 | 4010008200 | CER HM11TJ SL 331J 500V | | |
| C611 | 4010008230 | CER HM60TJ SL 820J 500V | | |
| C612 | 4010008360 | CER HM60TJ SL 180J 500V | | |
| C613 | 4010008260 | CER HM74TJ SL 151J 500V | | |
| C614 | 4010008230 | CER HM60TJ SL 820J 500V | | |
| C615 | 4030006880 | S.CER C1608 JB 1H 472K-T | T | 130.2/18.3 |
| C651 | 4030006880 | S.CER C1608 JB 1H 472K-T | T | 88.3/124.9 |
| C654 | 4010008360 | CER HM60TJ SL 180J 500V | | |
| C655 | 4010008320 | CER HM60TJ SL 390J 500V | | |
| C656 | 4010008280 | CER HM95TJ SL 221J 500V | | |
| C657 | 4010008220 | CER HM60TJ SL 680J 500V | | |
| C658 | 4010008360 | CER HM60TJ SL 180J 500V | | |
| C659 | 4010008380 | CER HM60TJ SL 120J 500V | | |
| C660 | 4010008280 | CER HM95TJ SL 221J 500V | | |
| C661 | 4010008240 | CER HM60TJ SL 101J 500V | | |
| C662 | 4010008390 | CER HM60TJ SL 100D 500V | | |
| C663 | 4010008250 | CER HM74TJ SL 121J 500V | | |
| C664 | 4010008320 | CER HM60TJ SL 390J 500V | | |
| C665 | 4030006880 | S.CER C1608 JB 1H 472K-T | T | 96.6/28.6 |
| C701 | 4030006880 | S.CER C1608 JB 1H 472K-T | T | 68.6/127.5 |
| C703 | 4010008370 | CER HM60TJ SL 150J 500V | | |
| C704 | 4010008350 | CER HM60TJ SL 220J 500V | | |
| C705 | 4010005650 | CER HM60SJ SL 200J 500V | | |
| C706 | 4010005860 | CER HM95SJ SL 201J 500V | | |

## [FILTER UNIT]

| REF NO. | ORDER NO. | DESCRIPTION | M. | H/V LOCATION |
|---|---|---|---|---|
| C707 | 4010008310 | CER HM60TJ SL 470J 500V | | |
| C708 | 4010008370 | CER HM60TJ SL 150J 500V | | |
| C709 | 4010008280 | CER HM95TJ SL 221J 500V | | |
| C710 | 4010008350 | CER HM60TJ SL 220J 500V | | |
| C712 | 4010008330 | CER HM60TJ SL 330J 500V | | |
| C713 | 4010008310 | CER HM60TJ SL 470J 500V | | |
| C714 | 4030006880 | S.CER C1608 JB 1H 472K-T | T | 69.6/18.3 |
| C715 | 4010008360 | CER HM60TJ SL 180J 500V | | |
| C751 | 4030006880 | S.CER C1608 JB 1H 472K-T | T | 109.1/125 |
| C755 | 4010008240 | CER HM60TJ SL 101J 500V | | |
| C756 | 4010008230 | CER HM60TJ SL 820J 500V | | |
| C757 | 4010008360 | CER HM60TJ SL 180J 500V | | |
| C758 | 4010008210 | CER HM60TJ SL 560J 500V | | |
| C759 | 4010008240 | CER HM60TJ SL 101J 500V | | |
| C760 | 4010008400 | CER HM60TJ SL 060D 500V | | |
| C761 | 4010008310 | CER HM60TJ SL 470J 500V | | |
| C763 | 4030006880 | S.CER C1608 JB 1H 472K-T | T | 115.6/28.6 |
| C764 | 4010005650 | CER HM60SJ SL 200J 500V | | |
| C765 | 4010008370 | CER HM60TJ SL 150J 500V | | |
| C801 | 4030006880 | S.CER C1608 JB 1H 472K-T | T | 168.6/158.6 |
| C804 | 4010008360 | CER HM60TJ SL 180J 500V | | |
| C805 | 4010008320 | CER HM60TJ SL 390J 500V | | |
| C806 | 4010008310 | CER HM60TJ SL 470J 500V | | |
| C807 | 4010005600 | CER HM60SJ SL 090D 500V | | |
| C808 | 4010008330 | CER HM60TJ SL 330J 500V | | |
| C809 | 4010008320 | CER HM60TJ SL 390J 500V | | |
| C810 | 4010008410 | CER HM60TJ SL 030C 500V | | |
| C811 | 4010005560 | CER HM60SJ SL 050C 500V | | |
| C813 | 4030006880 | S.CER C1608 JB 1H 472K-T | T | 175.6/26 |
| | | | | |
| RL401 | 6330001470 | RLY AJS1311 | | |
| RL402 | 6330001470 | RLY AJS1311 | | |
| RL451 | 6330001470 | RLY AJS1311 | | |
| RL452 | 6330001470 | RLY AJS1311 | | |
| RL501 | 6330001470 | RLY AJS1311 | | |
| RL502 | 6330001470 | RLY AJS1311 | | |
| RL551 | 6330001470 | RLY AJS1311 | | |
| RL552 | 6330001470 | RLY AJS1311 | | |
| RL601 | 6330001470 | RLY AJS1311 | | |
| RL602 | 6330001470 | RLY AJS1311 | | |
| RL651 | 6330001470 | RLY AJS1311 | | |
| RL652 | 6330001470 | RLY AJS1311 | | |
| RL701 | 6330001470 | RLY AJS1311 | | |
| RL702 | 6330001470 | RLY AJS1311 | | |
| RL751 | 6330001470 | RLY AJS1311 | | |
| RL752 | 6330001470 | RLY AJS1311 | | |
| RL801 | 6330001460 | RLY FTR-F1CA012V | | |
| RL802 | 6330001460 | RLY FTR-F1CA012V | | |
| | | | | |
| J901 | 6510017930 | CNR 1771P145-20 | | |
| J902 | 6510022031 | S.CNR B10B-ZR-SM4-TF (LF) (SN) | T | 145.3/165.2 |
| J903 | 6510019971 | S.CNR 52808-1071 | T | 4/156 |
| J904 | 6510017930 | CNR 1771P145-20 | | |
| J905 | 6510019421 | S.CNR B8B-ZR-SM4-TF (LF) (SN) | T | 146.8/160.2 |

## [MEMORY BOARD]

| REF NO. | ORDER NO. | DESCRIPTION | M. | H/V LOCATION |
|---|---|---|---|---|
| IC1 | 1130012223 | S.IC E28F128J3C3G-150 | T | 39.8/26.2 |
| IC2 | 1130012060 | S.IC TE28F128J3C-150 | T | 24/26.2 |
| | | | | |
| C1 | 4030011600 | S.CER C1608 JB 1E 104K-T | T | 41.8/38.8 |
| C2 | 4030011600 | S.CER C1608 JB 1E 104K-T | T | 39.9/13.2 |
| C3 | 4030011600 | S.CER C1608 JB 1E 104K-T | T | 36.8/13.2 |
| C4 | 4030011600 | S.CER C1608 JB 1E 104K-T | T | 26/38.8 |
| C5 | 4030011600 | S.CER C1608 JB 1E 104K-T | T | 24/13.2 |
| C6 | 4030011600 | S.CER C1608 JB 1E 104K-T | T | 21/13.2 |
| | | | | |
| J1 | 6510024210 | S.CNR AXK6S30435P | T | 55/20 |
| J2 | 6510024200 | S.CNR AXK6S40435P | T | 10/20 |

M.=Mounted side (T: Mounted on the Top side, B: Mounted on the Bottom side)
S.=Surface mount

# SECTION 6 MECHANICAL PARTS AND DISSASEMBLY

## [CHASSIS PARTS]

| REF. NO. | ORDER NO. | DESCRIPTION | QTY. |
|---|---|---|---|
| MF1 | 2710000760 | Fan FD1240107B-1N | 1 |
| SP1 | 2510001260 | 2590 SP box | 1 |
| MP1 | 8930040720 | 1768 B-clip | 1 |
| MP2 | 8930061281 | 2590 ant angle-1 | 1 |
| MP3 | 8930061840 | 2590 A-stand sheet | 2 |
| MP4 | 8510016031 | 2590 BPF case-1 | 1 |
| MP5 | 8510016040 | 2590 BPF S-cover | 1 |
| MP6 | 8010019283 | 2590 Chassis-3 | 1 |
| MP7 | 8930061720 | 2590 DIGISEL plate | 1 |
| MP8 | 8930062320 | 2590 A-DIGISEL sponge | 1 |
| MP10 | 8510015851 | 2590 FILTER case-1 | 1 |
| MP11 | 8110008082 | 2590 L-cover-2 | 1 |
| MP12 | 8110008091 | 2590 LOGIC cover-1 | 1 |
| MP13 | 8930061350 | 2590 main stand | 2 |
| MP14 | 8930061960 | 2590 M-fan angle | 1 |
| MP15 | 8930061761 | 2590 M-jack angle-1 | 1 |
| MP16 | 8510016101 | 2590 PLL plate-1 | 2 |
| MP17 | 8510016010 | 2590 P-R cover | 1 |
| MP18 | 8210020460 | 2590 rear panel | 1 |
| MP20 | 8510015860 | 2590 SCOPE cover | 1 |
| MP21 | 8210019820 | 2590 side panel | 2 |
| MP22 | 8930062010 | 2590 S-jack angle | 1 |
| MP23 | 8930061950 | 2590 SP angle | 1 |
| MP27 | 8110008072 | 2590 U-cover-2 | 1 |
| MP101 | 8810007231 | Setscrew H M3 × 8 ZC3 | 4 |
| MP102 | 8810007231 | Setscrew H M3 × 8 ZC3 | 1 |
| MP103 | 8810009111 | Screw PH M2.6 × 16 ZK3 | 2 |
| MP104 | 8810005771 | Screw BiH M3 × 8 ZK3 | 2 |
| MP105 | 8810005771 | Screw BiH M3 × 8 ZK3 | 2 |
| MP106 | 8810008451 | Screw BiH M4 × 8 ZK3 | 4 |
| MP107 | 8810005771 | Screw BiH M3 × 8 ZK3 | 8 |
| MP108 | 8810008451 | Screw BiH M4 × 8 ZK3 | 14 |
| MP109 | 8810008451 | Screw BiH M4 × 8 ZK3 | 13 |
| MP110 | 8810008451 | Screw BiH M4 × 8 ZK3 | 4 |
| MP111 | 8810008451 | Screw BiH M4 × 8 ZK3 | 2 |
| MP112 | 8810008451 | Screw BiH M4 × 8 ZK3 | 2 |
| MP113 | 8930011680 | Rubber foot (G) | 2 |
| MP114 | 8810009651 | Screw FH BT M3 × 8 NI-ZC3 | 20 |
| MP115 | 8810009651 | Screw FH BT M3 × 8 NI-ZC3 | 4 |
| MP116 | 8810009461 | Screw FH M3 × 8 ZK | 4 |
| MP117 | 8810009461 | Screw FH M3 × 8 ZK | 2 |
| MP118 | 8810009461 | Screw FH M3 × 8 ZK | 1 |
| MP119 | 8810009461 | Screw FH M3 × 8 ZK | 4 |
| MP120 | 8810008630 | Screw PH BT M3 × 6 NI-ZU | 6 |
| MP121 | 8810008661 | Screw PH BT M3 × 8 NI-ZC3 | 14 |
| MP122 | 8810008661 | Screw PH BT M3 × 8 NI-ZC3 | 7 |
| MP123 | 8810008661 | Screw PH BT M3 × 8 NI-ZC3 | 5 |
| MP124 | 8810008661 | Screw PH BT M3 × 8 NI-ZC3 | 26 |
| MP125 | 8810008661 | Screw PH BT M3 × 8 NI-ZC3 | 7 |
| MP126 | 8810008661 | Screw PH BT M3 × 8 NI-ZC3 | 6 |
| MP127 | 8810008661 | Screw PH BT M3 × 8 NI-ZC3 | 4 |
| MP128 | 8810008661 | Screw PH BT M3 × 8 NI-ZC3 | 3 |
| MP129 | 8810008661 | Screw PH BT M3 × 8 NI-ZC3 | 2 |
| MP130 | 8810008661 | Screw PH BT M3 × 8 NI-ZC3 | 2 |
| MP131 | 8810008661 | Screw PH BT M3 × 8 NI-ZC3 | 4 |
| MP132 | 8810008661 | Screw PH BT M3 × 8 NI-ZC3 | 7 |
| MP133 | 8810008661 | Screw PH BT M3 × 8 NI-ZC3 | 2 |
| MP135 | 8810008661 | Screw PH BT M3 × 8 NI-ZC3 | 4 |
| MP136 | 8810008661 | Screw PH BT M3 × 8 NI-ZC3 | 2 |
| MP137 | 8810008661 | Screw PH BT M3 × 8 NI-ZC3 | 1 |
| MP138 | 8810008661 | Screw PH BT M3 × 8 NI-ZC3 | 4 |
| MP139 | 8810008661 | Screw PH BT M3 × 8 NI-ZC3 | 4 |
| MP140 | 8810008661 | Screw PH BT M3 × 8 NI-ZC3 | 11 |
| MP141 | 8810004431 | Screw PH M3 × 6 ZK3 | 2 |

## [CHASSIS PARTS]

| REF. NO. | ORDER NO. | DESCRIPTION | QTY. |
|---|---|---|---|
| MP142 | 8810004431 | Screw PH M3 × 6 ZK3 | 4 |
| MP143 | 8810009991 | Screw PH BT M3 × 8 ZK3 | 1 |
| MP144 | 8810004431 | Screw PH M3 × 6 ZK3 | 4 |
| MP145 | 8810008391 | Screw PH M4 × 12 ZC3 | 2 |
| MP146 | 8830000360 | Wing nut M5 NI | 1 |
| MP147 | 8930028390 | Himelon sheet AH | 1 |
| MP148 | 8850000150 | Flat washer M5 NI BS | 2 |
| MP150 | 8930049850 | 2240 D-sponge 3.5 × 5 × 50 | 1 |
| MP151 | 8930049850 | 2240 D-sponge 3.5 × 5 × 50 | 1 |
| MP152 | 8930017190 | Earth spring (F) | 1 |
| MP153 | 8930017190 | Earth spring (F) | 1 |
| MP154 | 8510016281 | 2590 K-plate-1 | 1 |
| MP155 | 8930056160 | Double side tape (AG) | 4 |
| MP156 | 8810004431 | Screw PH M3 × 6 ZK3 | 1 |
| MP157 | 8930065730 | 2590E-earth | 1 |
| MP158 | 8930062720 | Sponge (HS) | 1 |
| MP159 | 8930062270 | 2590 A-net | 1 |
| MP160 | 8930062280 | 2590 B-net | 1 |
| MP161 | 8930062290 | 2590 C-net | 1 |
| MP162 | 8930062360 | 2590 D-net | 1 |
| MP163 | 8930006960 | Sponge (Y) | 1 |
| MP164 | 8930062770 | Himelon sheet (CN) | 1 |
| MP165 | 8930058170 | Shield sponge (O) | 1 |
| MP166 | 8930058170 | Shield sponge (O) | 1 |
| MP167 | 8930017190 | Earth spring (F) | 1 |
| MP169 | 8930063220 | AL sheet (AJ) | 1 |
| MP171 | 8930028840 | Sponge (DF) | 1 |
| MP172 | 8930056020 | Sponge (GU) | 1 |
| MP173 | 8930056020 | Sponge (GU) | 1 |
| MP174 | 8930048960 | Shield tape (B) | 2 |
| MP175 | 8930056020 | Sponge (GU) | 2 |
| MP178 | 8950002460 | Other item S-10 | 1 |
| MP179 | 8930063450 | Shield sponge (AG) | 6 |
| MP180 | 8930063260 | Sponge (HV) | 1 |
| MP181 | 8930056401 | Shield sponge (H)-1 | 1 |
| MP182 | 8930063700 | AL sheet (AL) (for chassis W9) | 1 |
| MP184 | 8930061490 | Shield sponge (AB) | 1 |
| MP185 | 8930063780 | Shield sponge (AJ) | 1 |
| MP186 | 8930058840 | Shield sponge (T) | 1 |
| MP187 | 6910008240 | Clip 59TN4772 | 1 |
| MP188 | 8930063560 | Emboss tape (O) | 4 |

**Screw abbreviations**

BT: Self-tapping PH: Pan head
FH: Flat head BiH: Binding head
ZK: Black BS: Brass
NI: Nickel SUS: Stainless
NI-ZU: Nickel-Zinc

## [FRONT PARTS]

| REF. NO. | ORDER NO. | DESCRIPTION | QTY. |
|---|---|---|---|
| EP1 | 6910015291 | LCD unit LTA070B790F | 1 |
| EP11 | 6910011090 | Main sensor RMS20-250-201-P | 1 |
| EP12 | 6910011090 | Sub sensor RMS20-250-201-P | 1 |
| EP13 | 0880001460 | Rit sensor | 1 |
| EP101 | 6910015650 | Mount plate S-G2218-3#01 | 1 |
| EP102 | 6910015650 | Mount plate S-G2218-3#01 | 1 |
| | | | |
| MP1 | 8810008971 | Screw FH BT M2 × 3.5 NI-ZU | 2 |
| MP2 | 8810009181 | Screw FH BT M2 × 5 NI-ZU | 3 |
| MP3 | 8810009181 | Screw FH BT M2 × 5 NI-ZU | 1 |
| MP4 | 8810009181 | Screw FH BT M2 × 5 NI-ZU | 2 |
| MP5 | 8810005701 | Screw PH M2 × 4 ZK | 2 |
| MP7 | 8210019931 | 2590 10-key panel-1 | 1 |
| MP10 | 8930061450 | 2590 brake button | 1 |
| MP11 | 8930061470 | 2590 brake plate | 1 |
| MP12 | 8930061460 | 2590 brake spacer | 1 |
| MP13 | 8930060640 | 2590 CF lens | 1 |
| MP14 | 8110008100 | 2590 CF lens cover | 1 |
| MP15 | 8930060651 | 2590 CF plate -1 | 1 |
| MP17 | 8930060581 | 2590 EJECT button-1 | 1 |
| MP19 | 8210019800 | 2590 front panel | 1 |
| MP20 | 8930060600 | 2590 JACK plate | 1 |
| MP21 | 8930060592 | 2590 LCD holder-2 | 1 |
| MP22 | 8930061620 | 2590 LCD sponge | 1 |
| MP23 | 8930062562 | 2590 LENS holder-2 assembly | 1 |
| MP24 | 8310059640 | 2590 name plate | 1 |
| MP25 | 8930060690 | 2590 spring | 1 |
| MP26 | 8010019311 | 2590 sub chassis-1 | 1 |
| MP27 | 8930060623 | 2590 VR plate-3 | 1 |
| MP28 | 8310061241 | 2590 window frame-1 assembly | 1 |
| MP29 | 8310059661 | 2590 window plate-1 | 1 |
| MP30 | 8930062190 | Double side tape (AJ) | 2 |
| MP31 | 8930062180 | Double side tape (AK) | 2 |
| MP32 | 8930062170 | Double side tape (AL) | 3 |
| MP33 | 8610012052 | Knob K230-2 assembly | 1 |
| MP34 | 8610012061 | Knob K231-1 assembly | 1 |
| MP35 | 8610012071 | Knob K232-1 assembly | 2 |
| MP36 | 8610011391 | Knob K233-1 | 1 |
| MP37 | 8610011451 | Knob K234-1 | 1 |
| MP38 | 8610011461 | Knob K234 (A)-1 | 1 |
| MP39 | 8610011471 | Knob K234 (B)-1 | 1 |
| MP40 | 8610011481 | Knob K235-1 | 1 |
| MP41 | 8610011491 | Knob K236-1 | 1 |
| MP42 | 8610011501 | Knob K237-1 | 1 |
| MP43 | 8610011511 | Knob K237 (A)-1 | 1 |
| MP44 | 8610011521 | Knob K238-1 | 1 |
| MP45 | 8610011531 | Knob K239-1 | 1 |
| MP46 | 8610011541 | Knob K239 (A)-1 | 1 |
| MP47 | 8610011551 | Knob K240-1 | 1 |
| MP48 | 8610012081 | Knob K241-1 assembly | 1 |
| MP49 | 8610011561 | Knob K243-1 | 1 |
| MP50 | 8610011421 | Knob K244-1 | 1 |
| MP51 | 8610011431 | Knob K245-1 | 1 |
| MP52 | 8610011950 | Knob N300 assembly (green) | 3 |
| MP53 | 8610011960 | Knob N300 (A) assembly (red) | 3 |
| MP55 | 8610011830 | Knob N301 | 2 |
| MP56 | 8610011970 | Knob N302 assembly | 2 |
| MP58 | 8610011760 | Knob N303 (green) | 1 |
| MP59 | 8610011770 | Knob N303(A) (red) | 1 |
| MP60 | 8610011780 | Knob N303(B) (gray) | 2 |
| MP61 | 8610011980 | Knob N304 assembly (green) | 1 |
| MP62 | 8610011990 | Knob N304 (A) assembly (red) | 1 |
| MP63 | 8610012000 | Knob N304 (B) assembly (gray) | 2 |
| MP65 | 8610012010 | Knob N305 assembly | 1 |
| MP67 | 8610012020 | Knob N306 assembly | 1 |
| MP68 | 8610011840 | Knob N-306 cover | 1 |
| MP70 | 8610011741 | Knob N307-1 | 7 |
| MP71 | 8610012031 | Knob N309-1 assembly | 1 |
| MP72 | 8610011850 | Knob N-309 cover | 1 |
| MP75 | 8610011810 | Knob N310 (green) | 3 |
| MP76 | 8610011820 | Knob N310 (A) (red) | 3 |

## [FRONT PARTS]

| REF. NO. | ORDER NO. | DESCRIPTION | QTY. |
|---|---|---|---|
| MP77 | 8610012040 | Knob N311 assembly | 1 |
| MP78 | 8850002010 | Plain washer (AG) | 1 |
| MP79 | 8930062080 | Rubber tube (C) | 12 |
| MP80 | 8930062090 | Rubber tube (D) | 2 |
| MP81 | 8930061731 | Sponge (HI)-1 | 2 |
| MP82 | 8810008451 | Screw BiH M4 × 8 ZK | 4 |
| MP84 | 8810008761 | Screw PH BT M2 × 8 NI-ZU | 10 |
| MP85 | 8810008761 | Screw PH BT M2 × 8 NI-ZU | 4 |
| MP86 | 8810008761 | Screw PH BT M2 × 8 NI-ZU | 4 |
| MP87 | 8810008761 | Screw PH BT M2 × 8 NI-ZU | 2 |
| MP88 | 8810008761 | Screw PH BT M2 × 8 NI-ZU | 10 |
| MP90 | 8810008630 | Screw PH BT M3 × 6 NI-ZU | 4 |
| MP91 | 8810008630 | Screw PH BT M3 × 6 NI-ZU | 4 |
| MP92 | 8810008630 | Screw PH BT M3 × 6 NI-ZU | 4 |
| MP93 | 8810008630 | Screw PH BT M3 × 6 NI-ZU | 1 |
| MP94 | 8810008630 | Screw PH BT M3 × 6 NI-ZU | 2 |
| MP95 | 8810008630 | Screw PH BT M3 × 6 NI-ZU | 3 |
| MP99 | 8810009181 | Screw FH BT M2 × 5 NI-ZU | 2 |
| MP100 | 8930062350 | Double side tape (AM) | 1 |
| MP103 | 8930006960 | Sponge (Y) | 1 |
| MP104 | 8930019010 | Sponge (CI) | 1 |
| MP105 | 8930062910 | Double side tape (AO) | 2 |
| MP106 | 8930062170 | Double side tape (AL) | 2 |
| MP107 | 8930005140 | Alumi sheet (A) | 1 |
| MP108 | 8930062950 | Shield sponge (AF) | 3 |
| MP109 | 8930063270 | 2590 earth spring | 1 |
| MP110 | 8930063270 | 2590 earth spring | 1 |
| MP111 | 8930017190 | Earth spring (F) | 1 |
| MP112 | 8930063510 | Emboss tape (L) | 1 |
| MP113 | 8930063500 | Emboss tape (M) | 1 |
| MP114 | 8930063490 | Emboss tape (N) | 2 |
| MP115 | 8930063540 | 2590 A-earth spring | 1 |
| MP116 | 8930063790 | Shield sponge (AI) | 2 |
| MP117 | 8930063800 | Shield sponge (AH) | 2 |
| MP118 | 8930063450 | Shield sponge (AG) | 1 |

**Screw abbreviations**

BT: Self-tapping
FH: Flat head
ZK: Black
NI: Nickel
NI-ZU: Nickel-Zinc
PH: Pan head
BiH: Binding head
BS: Brass
SUS: Stainless

## [DISPLAY BOARD]

| REF. NO. | ORDER NO. | DESCRIPTION | QTY. |
|---|---|---|---|
| BT601 | 3020000110 | Battery CR2032 | 1 |
| MP1*1 | 8930063860 | 2590 C-earth spring | 1 |
| MP301*1 | 8510015390 | 2591 REG plate | 1 |

## [SW-A BOARD]

| REF. NO. | ORDER NO. | DESCRIPTION | QTY. |
|---|---|---|---|
| MP1*1 | 8930063530 | 2590 B-earth spring | 1 |

## [VR-B BOARD]

| REF. NO. | ORDER NO. | DESCRIPTION | QTY. |
|---|---|---|---|
| R1 | 7210003160 | Variable resistor RV-317 [MIC/RF PWR] | 1 |
| R2 | 7210003160 | Variable resistor RV-317 [MAIN AGC/SQL] | 1 |

## [VR-C BOARD]

| REF. NO. | ORDER NO. | DESCRIPTION | QTY. |
|---|---|---|---|
| R1 | 7210003160 | Variable resistor RV-317 [KEY SPEED/DELAY] | 1 |
| R2 | 7210003160 | Variable resistor RV-317 [SUB AGC SQL] | 1 |

## [VR-D BOARD]

| REF. NO. | ORDER NO. | DESCRIPTION | QTY. |
|---|---|---|---|
| R1 | 7210001130 | Variable resistor RK097111T005A [BRIGHT] | 1 |
| R2*1 | 7210001130 | Variable resistor RK097111T005A [CONTRAST] | 1 |
| R3*1 | 7210001130 | Variable resistor RK097111T005A [ANTI VOX] | 1 |
| R4*1 | 7210001130 | Variable resistor RK097111T005A [VOX GAIN] | 1 |
| R5*1 | 7210001130 | Variable resistor RK097111T005A [DRIVE] | 1 |
| R6*1 | 7210001130 | Variable resistor RK097111T005A [COMP] | 1 |
| R7*1 | 7210001130 | Variable resistor RK097111T005A [MONI GAIN] | 1 |

## [MIC BOARD]

| REF. NO. | ORDER NO. | DESCRIPTION | QTY. |
|---|---|---|---|
| J1 | 6510000190 | Connector FM214-8SS (P) [MIC] | 1 |

## [JACK BOARD]

| REF. NO. | ORDER NO. | DESCRIPTION | QTY. |
|---|---|---|---|
| J2 | 6510023891 | Connector S-G4617#01F [PHONES] | 1 |
| J102 | 6510023900 | Connector LGR4619-7000 [ELEC-KEY] | 1 |

## [PBT1 BOARD]

| REF. NO. | ORDER NO. | DESCRIPTION | QTY. |
|---|---|---|---|
| R1 | 7210003180 | Variable resistor RV-319 [MAIN DIGI-SEL/NOTCH] | 1 |
| S1 | 2250000410 | Switch TP90D96E20-30F-2178-1 [MAIN TWIN PBT] | 1 |

## [PBT2 BOARD]

| REF. NO. | ORDER NO. | DESCRIPTION | QTY. |
|---|---|---|---|
| R1 | 7210003180 | Variable resistor RV-319 [SUB DIGI-SEL/NOTCH] | 1 |
| R2 | 7210003170 | Variable resistor RV-318 [CW PITCH] | 1 |
| S1 | 2250000410 | Switch TP90D96E20-30F-2178-1 [SUB TWIN PBT] | 1 |

**Screw abbreviations**

BT: Self-tapping PH: Pan head
FH: Flat head BiH: Binding head
ZK: Black BS: Brass
NI: Nickel SUS: Stainless
NI-ZU: Nickel-Zinc

*1Refer to SECTION 8 BOARD LAYOUTS.

## [DIGISEL UNIT]

| REF. NO. | ORDER NO. | DESCRIPTION | QTY. |
|---|---|---|---|
| MP1 | 8930061600 | 2590 DIGISEL spring | 1 |
| MP2 | 8930061600 | 2590 DIGISEL spring | 1 |
| MP3 | 8930061600 | 2590 DIGISEL spring | 1 |
| MP4 | 8930061600 | 2590 DIGISEL spring | 1 |
| MP5 | 8510015841 | 2590 D-SHIELD plate-1 | 1 |
| MP6 | 8930014140 | Earth spring (D) | 1 |
| MP7 | 8930014140 | Earth spring (D) | 1 |
| MP8 | 8510016021 | 2590 DIGISEL case-1 | 1 |
| MP9 | 8110008061 | 2590 DIGISEL cover-1 | 1 |
| MP10 | 8930014140 | Earth spring (D) | 1 |
| MP11 | 8930014140 | Earth spring (D) | 1 |
| MP12 | 8930014140 | Earth spring (D) | 1 |
| MP13 | 8930014140 | Earth spring (D) | 1 |
| MP14 | 8810007231 | Setscrew H M3 × 8 ZC3 | 8 |
| MP15 | 8810008661 | Screw PH BT M3 × 8 NI-ZC3 | 1 |

## [OSC UNIT]

| REF. NO. | ORDER NO. | DESCRIPTION | QTY. |
|---|---|---|---|
| MP1 | 8510015822 | 2590 OSC case-2 | 1 |
| MP2 | 8110008050 | 2590 OSC cover | 1 |
| MP3 | 8810008660 | Screw PH BT M3 × 8 NI-ZU | 4 |
| MP4 | 8810008660 | Screw PH BT M3 × 8 NI-ZU | 4 |

## [ANT-SW UNIT]

| REF. NO. | ORDER NO. | DESCRIPTION | QTY. |
|---|---|---|---|
| J51 | 6510000410 | Connector MR-DS-E 02 [ANT1] | 1 |
| J61 | 6510000410 | Connector MR-DS-E 02 [ANT2] | 1 |
| J71 | 6510000410 | Connector MR-DS-E 02 [ANT3] | 1 |
| J81 | 6510000410 | Connector MR-DS-E 02 [ANT4] | 1 |

## [PA UNIT]

| REF. NO. | ORDER NO. | DESCRIPTION | QTY. |
|---|---|---|---|
| MF1 | 2710000770 | Fan FCB34AC12A | 1 |
| W1 | 8900012790 | Cable OPC-1299 | 1 |
| MP1 | 8820000700 | 1129 screw | 4 |
| MP3 | 8930061230 | 2590 FL-PA angle | 1 |
| MP4 | 8930061240 | 2590 FR-PA angle | 1 |
| MP5 | 8930061260 | 2590 L-fan angle | 1 |
| MP6 | 8510015991 | 2590 PA cover-1 | 1 |
| MP7 | 8410002550 | 2590 PA heatsink | 1 |
| MP8 | 8930062121 | 2590 PA sheet-1 | 1 |
| MP9 | 8930061250 | 2590 R-fan angle | 1 |
| MP10 | 8930061221 | 2590 R-PA angle-1 | 1 |
| MP11 | 8930061430 | 2590 rubber | 4 |
| MP12 | 8930062210 | Thermally sheet (AL) | 1 |
| MP13 | 8810009040 | Setscrew H M2.6 × 10 NI | 6 |
| MP14 | 8810007231 | Setscrew H M3 × 8 ZC3 | 10 |
| MP15 | 8810008661 | Screw PH BT M3 × 8 NI-ZC3 | 8 |
| MP16 | 8810008661 | Screw PH BT M3 × 8 NI-ZC3 | 5 |
| MP17 | 8810008661 | Screw PH BT M3 × 8 NI-ZC3 | 1 |
| MP18 | 8810008661 | Screw PH BT M3 × 8 NI-ZC3 | 1 |
| MP19 | 6910008240 | Clip 59TN4772 | 1 |
| MP20 | 8930063150 | Thermally sheet (AR) | 2 |

## [MAIN UNIT]

| REF. NO. | ORDER NO. | DESCRIPTION | QTY. |
|---|---|---|---|
| F3 | 5210000040 | Fuse FGB 2A | 1 |
| J1*1 | 6510023671 | Connector TCS4480-0141577 [MAIN ACC (1)] | 1 |
| J2*1 | 6510023661 | Connector TCS4470-0141577 [MAIN ACC (2)] | 1 |
| J3*1 | 6510023671 | Connector TCS4480-0141577 [SUB ACC (1)] | 1 |
| J4*1 | 6510023661 | Connector TCS4470-0141577 [SUB ACC (2)] | 1 |
| J5*1 | 6450001130 | Connector JPJ2042-01-110 [RELAY/ALC] | 1 |
| J6*1 | 6510023730 | Connector LGY6502-0600C [METER] | 1 |
| J7*1 | 6510023730 | Connector LGY6502-0600C [EXT KEYPAD] | 1 |
| J8*1 | 6510023740 | Connector LGR4609-7000 [KEY] | 1 |
| J9*1 | 6510023070 | Connector HEC2305-01-250 [DC OUT] | 1 |
| J140*1 | 6510023720 | Connector LGY6501-0600C [EXT-SP MAIN] | 1 |
| J141*1 | 6510023720 | Connector LGY6501-0600C [EXT-SP SUB] | 1 |
| J490 | 6510023750 | Connector 01K1971-10 [REF I/O] | 1 |
| J495*1 | 6510023701 | Connector TORX178S (F) [S/P DIF IN] | 1 |
| J496*1 | 6510023711 | Connector TOTX178S (F) [S/P DIF OUT] | 1 |
| MP496 | 8930062740 | 2590 M-spring | 1 |
| MP501 | 8930014140 | Earth spring (D) | 1 |
| MP502*1 | 8510015800 | 2590 2LO case | 1 |
| MP503*1 | 8510000180 | 117 shield plate | 1 |
| MP511*1 | 8510015900 | 2590 M-2LO case | 1 |
| MP551 | 8930014140 | Earth spring (D) | 1 |
| MP801 | 8930014140 | Earth spring (D) | 1 |

## [DSP-A BOARD]

| REF. NO. | ORDER NO. | DESCRIPTION | QTY. |
|---|---|---|---|
| MP1 | 8510014140 | 2432 DSP cover | 1 |
| MP2 | 8510016110 | 2590 M-DSP case | 1 |
| MP3*1 | 8930062220 | Thermally sheet (AO) | 1 |

## [DSP-B BOARD]

| REF. NO. | ORDER NO. | DESCRIPTION | QTY. |
|---|---|---|---|
| MP1 | 8510014140 | 2432 DSP cover | 1 |
| MP2 | 8510016110 | 2590 M-DSP case | 1 |
| MP3*1 | 8930062220 | Thermally sheet (AO) | 1 |

## [DSP-TX BOARD]

| REF. NO. | ORDER NO. | DESCRIPTION | QTY. |
|---|---|---|---|
| MP1 | 8510014140 | 2432 DSP cover | 1 |
| MP2 | 8510016110 | 2590 M-DSP case | 1 |
| MP3*1 | 8930062220 | Thermally sheet (AO) | 1 |

## [MEMORY BOARD]

| REF. NO. | ORDER NO. | DESCRIPTION | QTY. |
|---|---|---|---|
| MP1 | 8930028840 | Sponge (DF) | 1 |
| MP2 | 8930028840 | Sponge (DF) | 1 |
| MP3 | 8930063720 | AL sheet (AN) | 1 |

**Screw abbreviations**

BT: Self-tapping PH: Pan head
FH: Flat head BiH: Binding head
ZK: Black BS: Brass
NI: Nickel SUS: Stainless
NI-ZU: Nickel-Zinc

*1 Refer to SECTION 8 BOARD LAYOUTS.

## [SCOPE UNIT]

| REF. NO. | ORDER NO. | DESCRIPTION | QTY. |
|---|---|---|---|
| J902 | 6510023120 | Connector CD6109SA1J0 [RS-232C] | 1 |
| J903 | 6510024040 | Connector TM11R-5M2-88-LP [ETHERNET] | 1 |
| J904 | 6510024030 | Connector UBA-4R-D10T-1 [USB] | 1 |
| J905 | 6450001940 | Connector KEY-15S-2A3A [EXT MONITOR] | 1 |
| | | | |
| MP3 | 8930014140 | Earth spring (D) | 1 |
| MP101*1 | 8510015810 | 2590 MIX case | 1 |
| MP301*1 | 8510015810 | 2590 MIX case | 1 |
| MP601*1 | 8510015770 | 2590 DSP case | 1 |
| MP701*1 | 8510015880 | 2590 S2LO case | 1 |
| MP801*1 | 8510015891 | 2590 S3LO case-1 | 1 |
| MP802*1 | 8510014870 | 2577 RX-VCO case | 1 |
| MP901 | 8850001860 | Flat washer M3 (3 × 6 × 0.5) SUS | 2 |
| MP902 | 8850000420 | Spring washer M3 NI | 2 |

## [RXPLL-A UNIT]

| REF. NO. | ORDER NO. | DESCRIPTION | QTY. |
|---|---|---|---|
| MP1*1 | 8930039710 | Rubber sheet (V) | 2 |
| MP101*1 | 8510010760 | 1876 DDS case | 1 |
| MP102 | 8510010770 | 1876 DDS cover | 1 |
| MP103*1 | 8510010850 | 1897 D/A case | 1 |
| MP151*1 | 8510013510 | 2355 VCO case | 1 |
| MP201*1 | 8510013510 | 2355 VCO case | 1 |
| MP221*1 | 8510015780 | 2590 VCO case | 1 |
| MP222 | 8510015790 | 2590 VCO cover | 1 |
| MP223 | 8810007231 | Setscrew H M3 × 8 ZC3 | 4 |
| MP224 | 8930062300 | Rubber sheet (BI) | 1 |
| MP301*1 | 8930065740 | Earth spring (D) | 1 |
| MP501*1 | 8510010760 | 1876 DDS case | 1 |
| MP502 | 8510010770 | 1876 DDS cover | 1 |
| MP503*1 | 8510010850 | 1897 D/A case | 1 |
| MP541*1 | 8510011970 | 2177 OSC case | 1 |
| MP542 | 8510011960 | 2177 OSC cover | 1 |
| MP548 | 8930025070 | Sponge (CW) | 1 |
| MP601*1 | 8930065740 | Earth spring (D) | 1 |
| MP651*1 | 8510005980 | 724 shield case | 1 |
| MP652 | 8510005990 | 724 shield case cover | 1 |
| MP1058*1 | 6910001130 | 10M shield case | 1 |
| MP1101*1 | 8510016060 | 2590 HF case | 1 |
| MP1102 | 8510015910 | 2590 HF cover | 1 |
| MP1103 | 8930020860 | IC-holder | 2 |
| MP1104 | 8930049850 | 2240 D-sponge 3.5 × 5 × 50 | 1 |
| MP1301*1 | 8510016050 | 2590 50M case | 1 |
| MP1408*1 | 6910001130 | 10M shield case | 1 |
| MP1501*1 | 8930065740 | Earth spring (D) | 1 |
| MP1502*1 | 8930065740 | Earth spring (D) | 1 |
| MP1503*1 | 8930065740 | Earth spring (D) | 1 |
| MP1504*1 | 8930065740 | Earth spring (D) | 1 |
| MP1505*1 | 8510010460 | 1691 main shield plate | 1 |
| MP1651*1 | 8510016340 | 2590 2MIX case | 1 |
| MP1652*1 | 8510016390 | 2590 shield plate | 1 |
| MP1653*1 | 8930024170 | Earth spring (G) | 1 |

## [LOGIC UNIT]

| REF. NO. | ORDER NO. | DESCRIPTION | QTY. |
|---|---|---|---|
| MP101*1 | 8510016490 | 2590 LOGIC B-plate | 1 |
| MP103*1 | 8930063300 | AL sheet (AK) | 1 |
| MP201*1 | 8510016480 | 2590 LOGIC C-plate | 1 |
| MP203*1 | 8510016500 | 2590 LOGIC A-plate | 1 |
| MP204*1 | 8930063320 | 2590 A-sheet (top side of MP203) | 1 |
| MP205*1 | 8930063310 | 2590 B-sheet (bottom side of MP203) | 1 |
| MP801*1 | 8510005350 | VCO shield plate | 1 |

## [DC-DC UNIT]

| REF. NO. | ORDER NO. | DESCRIPTION | QTY. |
|---|---|---|---|
| W1 | 8900012780 | Cable OPC-1298 | 1 |
| | | | |
| MP21*1 | 8510015720 | 2590 DC-DC A-case | 1 |
| MP22 | 8510015730 | 2590 DC-DC A-plate | 1 |
| MP41*1 | 8510015720 | 2590 DC-DC A-case | 1 |
| MP42 | 8510015730 | 2590 DC-DC A-plate | 1 |
| MP61*1 | 8510015720 | 2590 DC-DC A-case | 1 |
| MP62 | 8510015730 | 2590 DC-DC A-plate | 1 |
| MP81*1 | 8510015720 | 2590 DC-DC A-case | 1 |
| MP82 | 8510015730 | 2590 DC-DC A-plate | 1 |
| MP101*1 | 8510015720 | 2590 DC-DC A-case | 1 |
| MP102 | 8510015730 | 2590 DC-DC A-plate | 1 |
| MP121*1 | 8510015740 | 2590 DC-DC B-case | 1 |
| MP122 | 8510015750 | 2590 DC-DC B-plate | 1 |

## [RXPLL-B UNIT]

| REF. NO. | ORDER NO. | DESCRIPTION | QTY. |
|---|---|---|---|
| MP1*1 | 8930039710 | Rubber sheet (V) | 2 |
| MP101*1 | 8510010760 | 1876 DDS case | 1 |
| MP102 | 8510010770 | 1876 DDS cover | 1 |
| MP103*1 | 8510010850 | 1897 D/A case | 1 |
| MP151*1 | 8510013510 | 2355 VCO case | 1 |
| MP201*1 | 8510013510 | 2355 VCO case | 1 |
| MP221*1 | 8510015780 | 2590 VCO case | 1 |
| MP222 | 8510015790 | 2590 VCO cover | 1 |
| MP223 | 8810007231 | Setscrew H M3 × 8 ZC3 | 4 |
| MP224 | 8930062300 | Rubber sheet (BI) | 1 |
| MP301*1 | 8930065740 | Earth spring (D) | 1 |
| MP501*1 | 8510010760 | 1876 DDS case | 1 |
| MP502 | 8510010770 | 1876 DDS cover | 1 |
| MP503*1 | 8510010850 | 1897 D/A case | 1 |
| MP541*1 | 8510011970 | 2177 OSC case | 1 |
| MP542 | 8510011960 | 2177 OSC cover | 1 |
| MP543*1 | 8510005070 | 599 shield plate | 1 |
| MP544*1 | 8930030940 | Enboss tape (D) | 1 |
| MP545*1 | 8930030940 | Enboss tape (D) | 1 |
| MP546 | 8930027810 | Enboss tape (B) | 1 |
| MP547 | 8930057730 | Sheild sponge (J) | 1 |
| MP601*1 | 8930065740 | Earth spring (D) | 1 |
| MP651*1 | 8510005980 | 724 shield case | 1 |
| MP652 | 8510005990 | 724 shield case cover | 1 |
| MP1058*1 | 6910001130 | 10M shield case | 1 |
| MP1101*1 | 8510016060 | 2590 HF case | 1 |
| MP1102 | 8510015910 | 2590 HF cover | 1 |
| MP1103 | 8930020860 | IC-holder | 2 |
| MP1104 | 8930049850 | 2240 D-sponge 3.5 × 5 × 50 | 1 |
| MP1301*1 | 8510016050 | 2590 50M case | 1 |
| MP1408*1 | 6910001130 | 10M shield case | 1 |
| MP1501*1 | 8930065740 | Earth spring (D) | 1 |
| MP1502*1 | 8930065740 | Earth spring (D) | 1 |
| MP1503*1 | 8930065740 | Earth spring (D) | 1 |
| MP1504*1 | 8930065740 | Earth spring (D) | 1 |
| MP1505*1 | 8510010460 | 1691 main shield plate | 1 |
| MP1651*1 | 8510016340 | 2590 2MIX case | 1 |
| MP1652*1 | 8510016390 | 2590 shield plate | 1 |
| MP1653*1 | 8930024170 | Earth spring (G) | 1 |

**Screw abbreviations**

BT: Self-tapping PH: Pan head
FH: Flat head BiH: Binding head
ZK: Black BS: Brass
NI: Nickel SUS: Stainless
NI-ZU: Nickel-Zinc

*1Refer to SECTION 8 BOARD LAYOUTS.

## [REG UNIT]

| REF. NO. | ORDER NO. | DESCRIPTION | | QTY. |
|---|---|---|---|---|
| EP1 | 6910016050 | REG unit FP2212B | [USA] | 1 |
| | 6910016060 | REG unit FP2212C | [OTHER] | 1 |

## [BPF UNIT]

| REF. NO. | ORDER NO. | DESCRIPTION | | QTY. |
|---|---|---|---|---|
| J103 | 6510023750 | Connector 01K1971-10 | [X-VERTER] | 1 |
| J104 | 6510023750 | Connector 01K1971-10 | [RXANT INA] | 1 |
| J105 | 6510023750 | Connector 01K1971-10 | [RXANT OUTA] | 1 |
| J504 | 6510023750 | Connector 01K1971-10 | [RXANT INB] | 1 |
| J505 | 6510023750 | Connector 01K1971-10 | [RXANT OUTB] | 1 |

## [TUNER UNIT]

| REF. NO. | ORDER NO. | DESCRIPTION | QTY. |
|---|---|---|---|
| MF1 | 2710000780 | Motor MP24Z | 1 |
| MF2 | 2710000780 | Motor MP24Z | 1 |
| MF3 | 2710000470 | Fan MF60B-12H901 | 1 |
| | | | |
| MP1 | 8950003200 | Universal couplings UJ6-5 | 2 |
| MP2 | 8930030112 | 1414 plate-2 | 2 |
| MP3 | 8820000881 | 1528 screw-1 | 4 |
| MP4 | 8930061271 | 2590 motor angle-1 | 1 |
| MP5 | 8510015831 | 2590 TUNER case-1 | 1 |
| MP6 | 8510015870 | 2590 TUNER cover | 1 |
| MP7 | 8810005161 | Cap bolt M3 X 20 ZK3 | 4 |
| MP8 | 8810007231 | Setscrew H M3 × 8 ZC3 | 6 |
| MP9 | 8810007231 | Setscrew H M3 × 8 ZC3 | 4 |
| MP10 | 8810008630 | Screw PH BT M3 × 6 NI-ZU | 6 |
| MP11 | 8810008630 | Screw PH BT M3 × 6 NI-ZU | 6 |
| MP12 | 8810008630 | Screw PH BT M3 × 6 NI-ZU | 4 |
| MP13 | 8850000130 | Flat washer M3 (3 × 8 × 0.5) NI BS | 4 |
| MP14 | 8930006960 | Sponge (Y) | 1 |
| MP15 | 8930059520 | Nonwovens sheet (CG) | 1 |
| MP16 | 8930058760 | Shield sponge (S) | 1 |
| MP17 | 8930005170 | Alminum sheet (F) | 1 |

## [CTRL BOARD]

| REF. NO. | ORDER NO. | DESCRIPTION | QTY. |
|---|---|---|---|
| MP1*[1] | 8510015760 | 2590 A-CTRL case | 1 |
| MP2 | 8930014140 | Earth spring (D) | 1 |

*[1]Refer to SECTION 8 BOARD LAYOUTS.

## [NETWORK BOARD]

| REF. NO. | ORDER NO. | DESCRIPTION | QTY. |
|---|---|---|---|
| MP1 | 8510011480 | 1900 AL cover | 1 |

## [ACCESSORIES]

| REF. NO. | ORDER NO. | DESCRIPTION | | QTY. |
|---|---|---|---|---|
| EP1 | 0800007460 | CF card SDCFB-64-101 | | 1 |
| | | | | |
| F1 | 5210000041 | Fuse FGB 2A | | 1 |
| | | | | |
| W1 | 8900005250 | AC power cable OPC-510 | [USA], [KOR] | 1 |
| | 8900005220 | AC power cable OPC-513 | [AUS] | 1 |
| | 8900005120 | AC power cable OPC-491 | [UK] | 1 |
| | 8900005130 | AC power cable OPC-492 | [OTHER] | 1 |
| W2 | 8900012770 | Jumper cable OPC-1243 | | 2 |
| | | | | |
| P1 | 5610000050 | Key plug AP-330 | [CW] | 3 |
| P2 | 5610000020 | Speaker plug AP-313 | [MONORAL] | 3 |
| P3 | 5610000170 | Speaker plug AP-370 | [STEREO] | 2 |
| | | | | |
| J1 | 6510023200 | Pin plug P030010 | | 2 |
| J2 | 5610000280 | DC power plug MP-121M4 | | 1 |
| J3 | 6450001271 | ACC plug TCP0577-71-5201 | [7-pin] | 2 |
| J4 | 6450001281 | ACC plug TCP0587-71-5401 | [8-pin] | 2 |
| | | | | |
| MP1 | 8930061400 | Rack mounting angle (A) | | 2 |
| MP2 | 8810006111 | Screw FH M4 × 9 ZK3 | | 4 |
| MP3 | 8810010281 | Screw FH M4 × 15 ZK3 | | 2 |
| MP4 | 8930061360 | 2590 sub stand | | 2 |
| MP5 | 8930061840 | 2590 A-stand sheet | | 2 |
| MP6 | 8930037280 | M-type cap | | 4 |

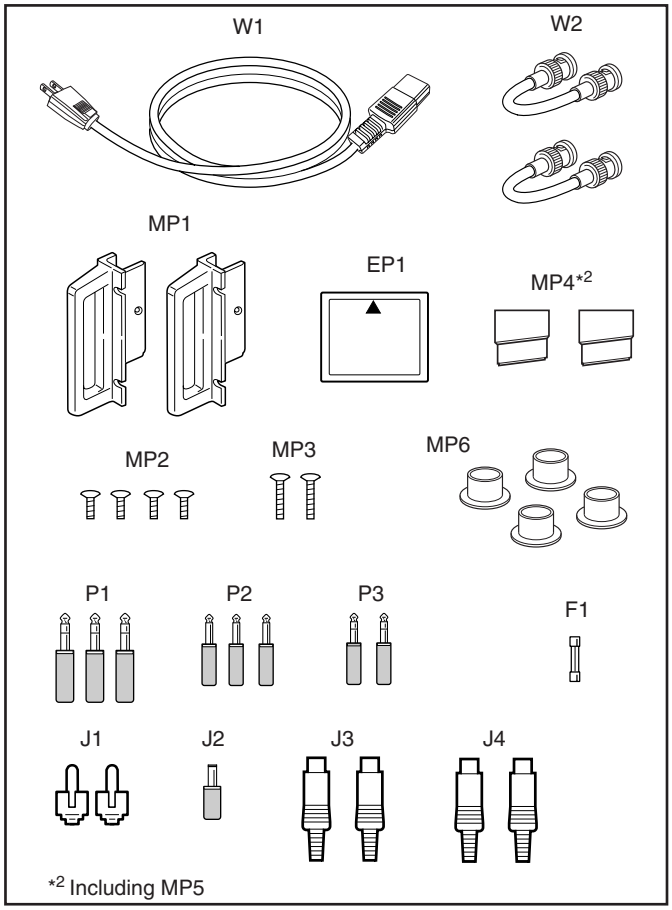


**Screw abbreviations**

BT: Self-tapping
FH: Flat head
ZK: Black
NI: Nickel
NI-ZU: Nickel-Zinc
PH: Pan head
BiH: Binding head
BS: Brass
SUS: Stainless

## • WIRE CONNECTION INFORMATION

| WIRE No. | CONNECTION1 | CONNECTION2 |
|---|---|---|
| Ⓐ | DISPLAY BOARD J203 | LOGIC UNIT J805 |
| Ⓑ | DISPLAY BOARD J3 | SW-A BOARD J3 |
| Ⓒ | DISPLAY BOARD J6 | VR-A BOARD J1 |
| Ⓓ | DISPLAY BOARD J302 | CF BOARD J3 |
| Ⓔ | DISPLAY BOARD J5 | VR-D BOARD J1 |
| Ⓕ | DISPLAY BOARD J301 | LCD UNIT |
| Ⓖ | DISPLAY BOARD J4 | SW-B BOARD J1 |
| Ⓗ | DISPLAY BOARD J205 | FRONT UNIT EP11 |
| Ⓘ | DISPLAY BOARD J1 | TENKEY BOARD J1 |
| Ⓙ | DISPLAY BOARD J205 | TENKEY BOARD J2 |
| Ⓚ | DISPLAY BOARD J202 | LOGIC UNIT J806 |
| Ⓛ | DISPLAY BOARD J201 | LCD UNIT |
| Ⓜ | TENKEY BOARD J5 | LED BOARD J1 |
| Ⓝ | TENKEY BOARD J4 | PBT1 BOARD J1 |
| Ⓞ | TENKEY BOARD J3 | SW-C BOARD J1 |
| Ⓟ | TENKEY BOARD J7 | FRONT UNIT EP13 |
| Ⓠ | TENKEY BOARD J6 | FRONT UNIT EP12 |
| Ⓡ | PBT2 BOARD J1 | SW-C BOARD J2 |
| Ⓢ | SW-A BOARD J1 | VR-B BOARD J1 |
| Ⓣ | SW-A BOARD J2 | VR-C BOARD J1 |
| Ⓤ | VR-A BOARD J3 | JACK BOARD J1 |
| Ⓥ | VR-A BOARD J4 | MIC BOARD J2 |
| Ⓦ | VR-A BOARD J2 | MAIN UNIT J440 |
| Ⓧ | CF BOARD J1 | LOGIC UNIT J807 |

| *WIRE No. | CONNECTION1 | CONNECTION2 | REF. No |
|---|---|---|---|
| ① | LOGIC UNIT J826 | MAIN UNIT J901 | W28 |
| ② | LOGIC UNIT J810 | MAIN UNIT J451 | W51~65 |
| ③ | LOGIC UNIT J815 | RXPLL-B UNIT J2 | W4 |
| ④ | LOGIC UNIT J814 | OSC UNIT UNIT J2 | W11 |
| ⑤ | LOGIC UNIT J813 | DIGISEL UNIT J10 | W5 |
| ⑥ | LOGIC UNIT J816 | RXPLL-A UNIT J2 | W3 |
| ⑦ | LOGIC UNIT J808 | MAIN UNIT J940 | W1 |
| ⑧ | LOGIC UNIT J809 | MAIN UNIT J900 | W2 |
| ⑩ | LOGIC UNIT J825 | SCOPE UNIT J910 | W178~185 |
| ⑪ | MAIN UNIT J400 | RXPLL-A UNIT J1701 | W17 |
| ⑫ | MAIN UNIT J450 | DC-DC UNIT J2 | W108~118 |
| ⑬ | LOGIC UNIT J802 | SCOPE UNIT J907 | W12 |
| ⑭ | MAIN UNIT J492 | CHASSIS UNIT MF1 | (MF2) |
| ⑮ | LOGIC UNIT J822 | MAIN UNIT J142 | W51~52 |
| ⑯ | MAIN UNIT J401 | RXPLL-A UNIT J1501 | W85~86 |
| ⑰ | MAIN UNIT J399 | RXPLL-B UNIT J681 | W95~96 |
| ⑱ | MAIN UNIT J503 | RXPLL-A UNIT J421 | W87~88 |
| ⑲ | MAIN UNIT J801 | PA200W BOARD J1 | W106~107 |
| ⑳ | MAIN UNIT J808 | SCOPE UNIT J11 | W83~84 |
| ㉑ | MAIN UNIT J403 | RXPLL-B UNIT J1701 | W18 |
| ㉒ | MAIN UNIT J502 | RXPLL-A UNIT J561 | W89~90 |
| ㉓ | MAIN UNIT J501 | RXPLL-A UNIT J681 | W91~92 |
| ㉔ | MAIN UNIT J491 | OSC UNIT UNIT J71 | W97~98 |
| ㉕ | MAIN UNIT J410 | SCOPE UNIT J4 | W16 |
| ㉖ | MAIN UNIT J430 | PA200W BOARD J2 | W101~105 |
| ㉗ | MAIN UNIT J411 | SCOPE UNIT J906 | W15 |
| ㉘ | RXPLL-A UNIT J1002 | DIGISEL UNIT J10 | W5 |
| ㉙ | RXPLL-A UNIT J601 | RXPLL-A UNIT J1001 | W149~150 |
| ㉚ | SCOPE UNIT J1 | RXPLL-A UNIT J1301 | W127~128 |
| ㉛ | RXPLL-A UNIT J351 | RXPLL-A UNIT J1101 | W151~152 |
| ㉜ | RXPLL-A UNIT J1002 | OSC UNIT UNIT J72 | W153~154 |
| ㉝ | RXPLL-B UNIT J1002 | DIGISEL UNIT J501 | W147~148 |
| ㉞ | SCOPE UNIT J2 | RXPLL-B UNIT J1301 | W129~130 |
| ㉟ | RXPLL-B UNIT J351 | RXPLL-B UNIT J1101 | W155~156 |
| ㊱ | SCOPE UNIT J3 | RXPLL-B UNIT J601 | W131~132 |
| ㊲ | RXPLL-B UNIT J561 | RXPLL-B UNIT J831 | W157~158 |
| ㊳ | RXPLL-B UNIT J1002 | OSC UNIT UNIT J73 | W159~160 |
| ㊴ | MAIN UNIT J404 | RXPLL-B UNIT J1501 | W93~94 |
| ㊵ | PA200W BOARD J5 | DC-DC UNIT J5 | W171~174 |
| ㊶ | DC-DC UNIT W1 | REG UNIT | W22 |
| ㊷ | FILTER UNIT J901 | PA200W BOARD J401 | W23 |
| ㊸ | FILTER UNIT J903 | ANT-SW J4 | W26 |
| ㊹ | CTRL BOARD J252 | NETWORK BOARD J3 | W2(Network) |
| ㊺ | CTRL BOARD J251 | NEWORK BOARD J2 | W1(Network) |
| ㊻ | ANT-SW UNIT J1 | CTRL BOARD J301 | W25 |
| ㊼ | CTRL BOARD J351 | BPF UNIT J106 | W141~142 |
| ㊽ | LOGIC UNIT J811 | CTRL BOARD J1 | W7 |
| ㊾ | FILTER UNIT J904 | CTRL BOARD J101 | W24 |
| ㊿ | FILTER UNIT J905 | CTRL BOARD J53 | W27 |
| (51) | FILTER UNIT J902 | CTRL BOARD J52 | W161~170 |
| (52) | DIGISEL UNIT J2 | BPF UNIT J101 | W133~134 |
| (53) | LOGIC UNIT J812 | BPF UNIT J1 | W6 |
| (54) | DIGISEL UNIT J502 | BPF UNIT J601 | W135~136 |
| (55) | RXPLL-A UNIT J1201 | BPF UNIT J102 | W139~140 |
| (56) | ANT-SW UNIT J3 | BPF UNIT J108 | W176~177 |
| (57) | RXPLL-B UNIT J1201 | BPF UNIT J602 | W137~138 |
| (58) | MAIN UNIT J802 | BPF UNIT J107 | W99~100 |
| (59) | CTRL BOARD J51 | NETWORK BOARD J1 | W3 |
| (60) | LOGIC UNIT J824 | PA UNIT MF1 | (MF1) |
| (61) | LOGIC UNIT J823 | CHASSIS UNIT SP1 | (SP1) |
| (62) | LOGIC UNIT J820 | DC-DC UNIT J4 | W73~82 |
| (63) | LOGIC UNIT J821 | DC-DC UNIT J3 | W66~72 |
| (65) | LOGIC UNIT J803 | SCOPE UNIT J909 | W13 |
| (66) | LOGIC UNIT J804 | SCOPE UNIT J908 | W14 |
| (68) | CTRL BOARD J2 | TUNER UNIT MF1/2 | W51~60 |
| (69) | NETWORK BOARD J4 | TUNER UNIT MF3 | (MF3) |
| (70) | PA UNIT EP501/EP502 | REG UNIT | W1(PA) |
| (71) | ANT-SW J2 | BPF UNIT J506 | W143~144 |

*: WIRE No. is assigned for the exploded views page 6-9 to 6-12, but for actual wires.

• **OVERALL**

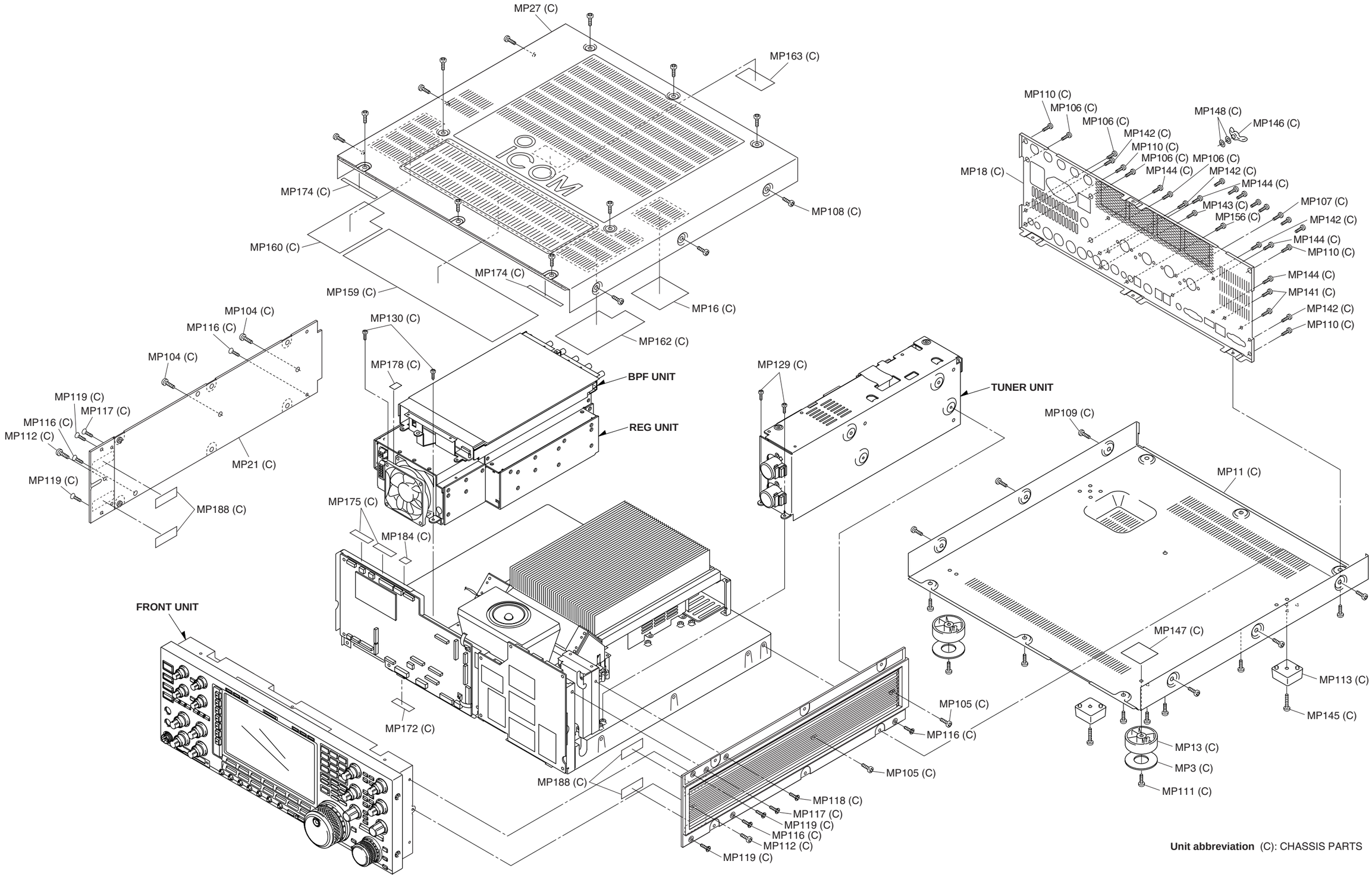


**Unit abbreviation** (C): CHASSIS PARTS

## • FRONT UNIT

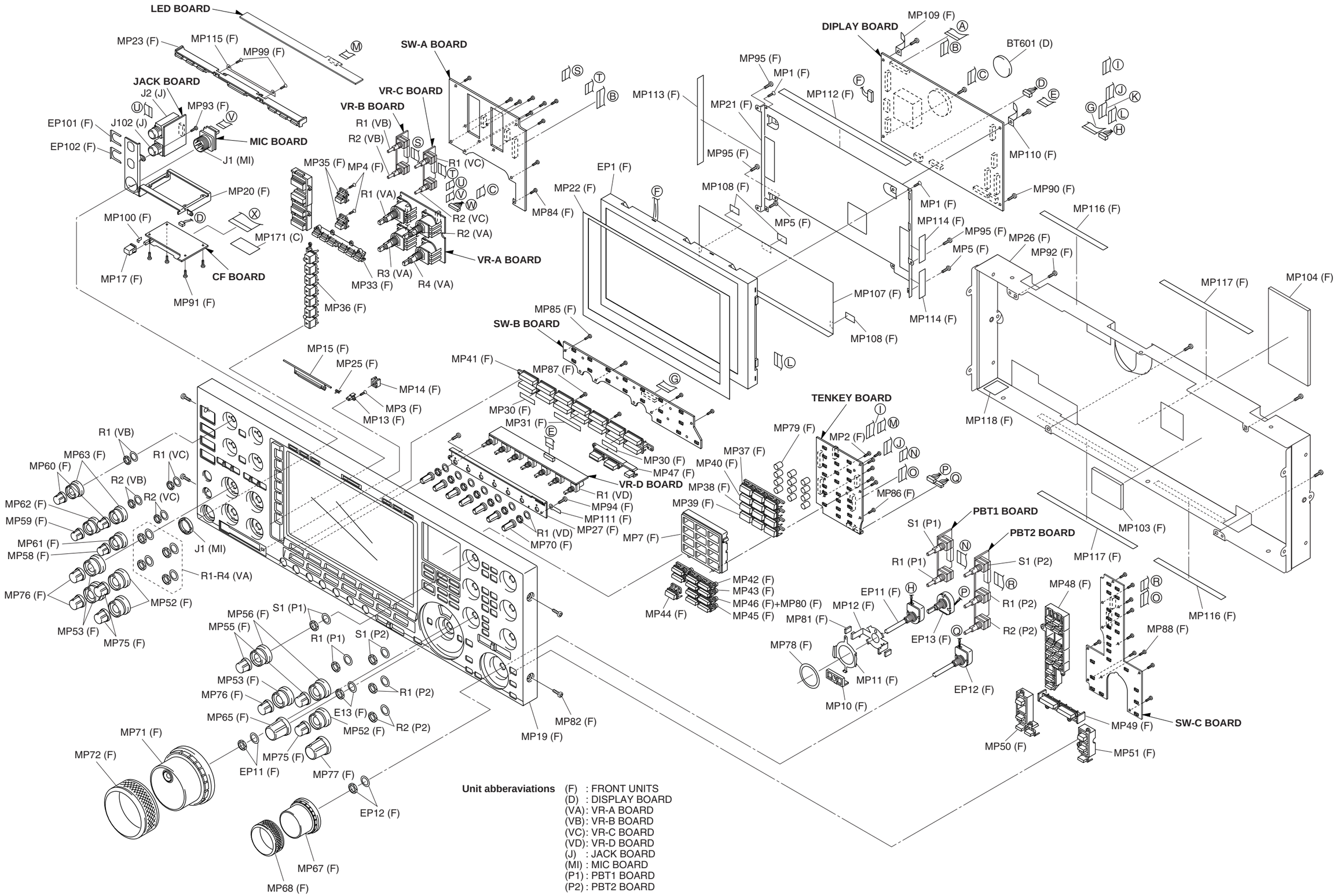


**Unit abberaviations**

(F) : FRONT UNITS
(D) : DISPLAY BOARD
(VA): VR-A BOARD
(VB): VR-B BOARD
(VC): VR-C BOARD
(VD): VR-D BOARD
(J) : JACK BOARD
(MI) : MIC BOARD
(P1) : PBT1 BOARD
(P2) : PBT2 BOARD

• **TOP SIDE**

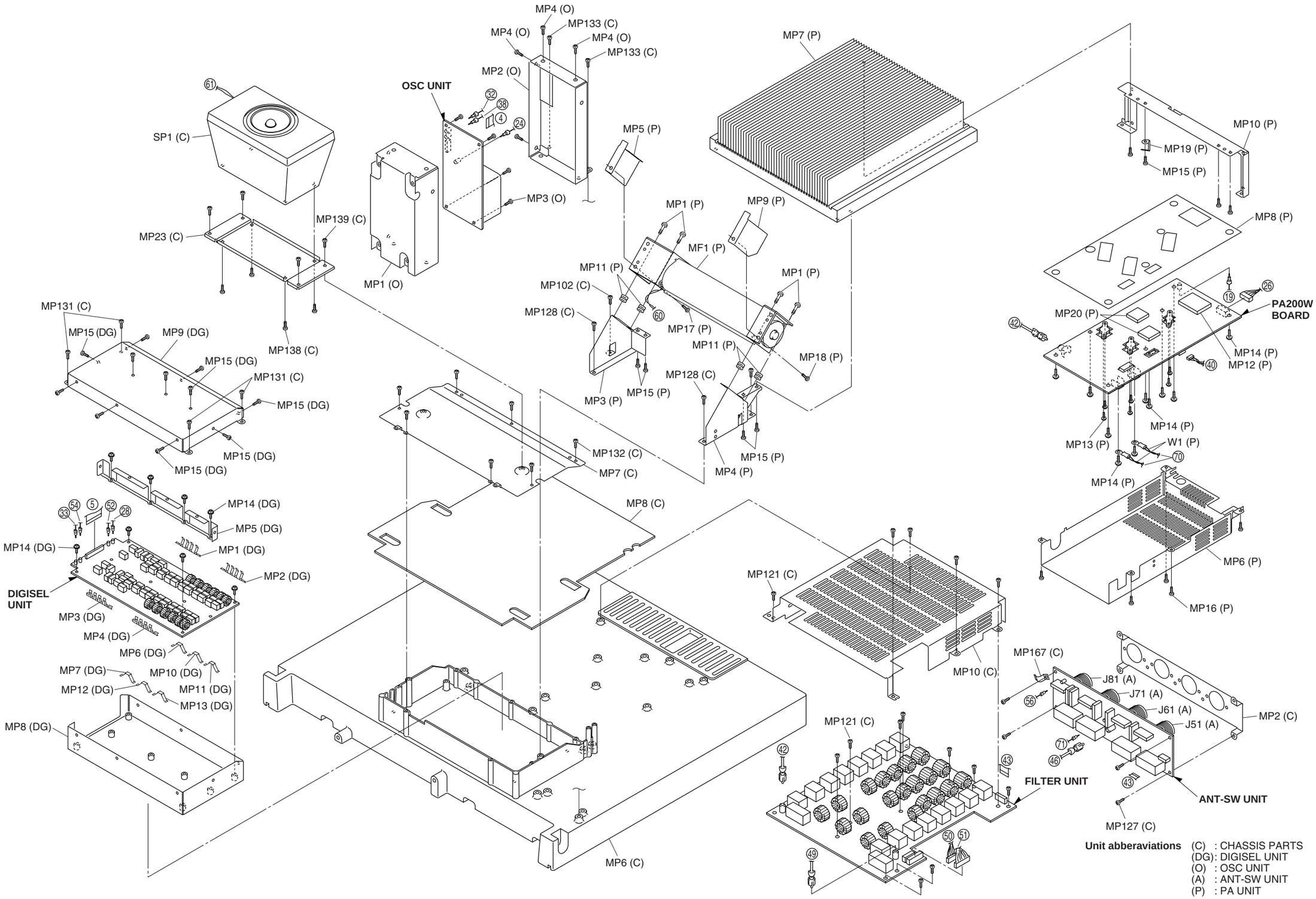


**Unit abberaviations**
(C) : CHASSIS PARTS
(DG): DIGISEL UNIT
(O) : OSC UNIT
(A) : ANT-SW UNIT
(P) : PA UNIT

• **FRONT AND BOTTOM SIDE**

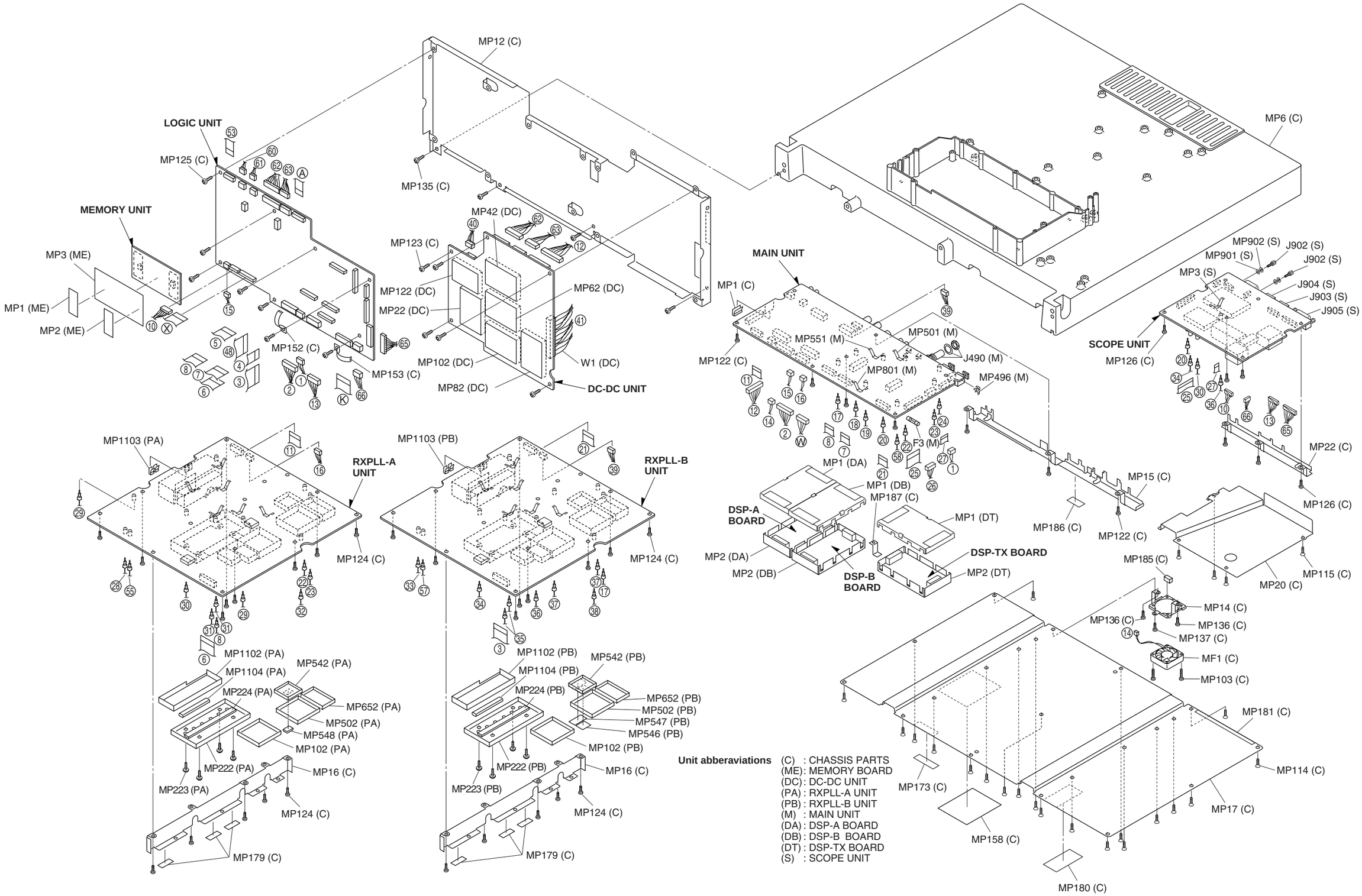


**Unit abberaviations**

(C) : CHASSIS PARTS
(ME): MEMORY BOARD
(DC): DC-DC UNIT
(PA) : RXPLL-A UNIT
(PB) : RXPLL-B UNIT
(M) : MAIN UNIT
(DA) : DSP-A BOARD
(DB) : DSP-B BOARD
(DT) : DSP-TX BOARD
(S) : SCOPE UNIT

• **REG, BPF AND TUNER UNITS**

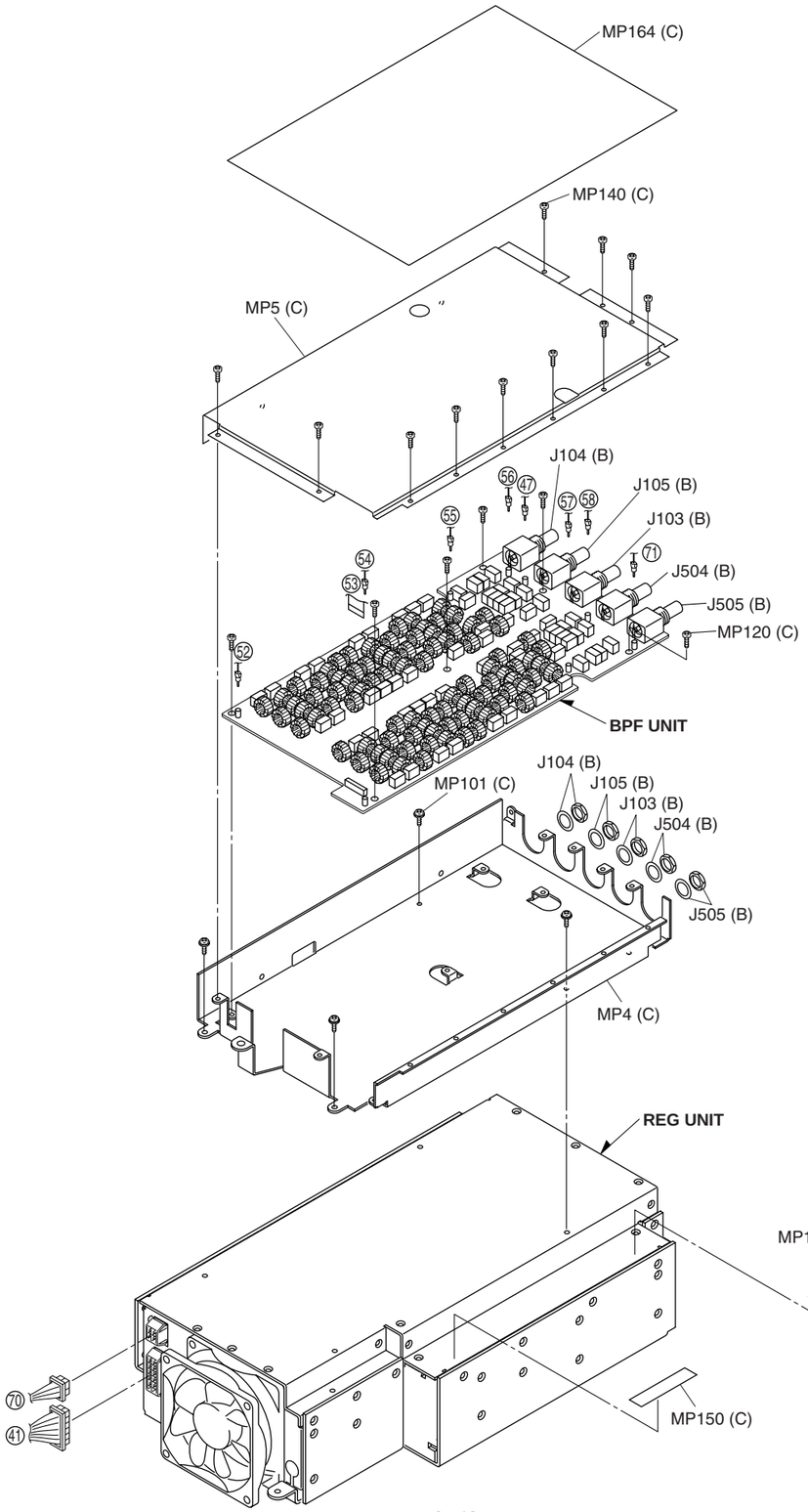


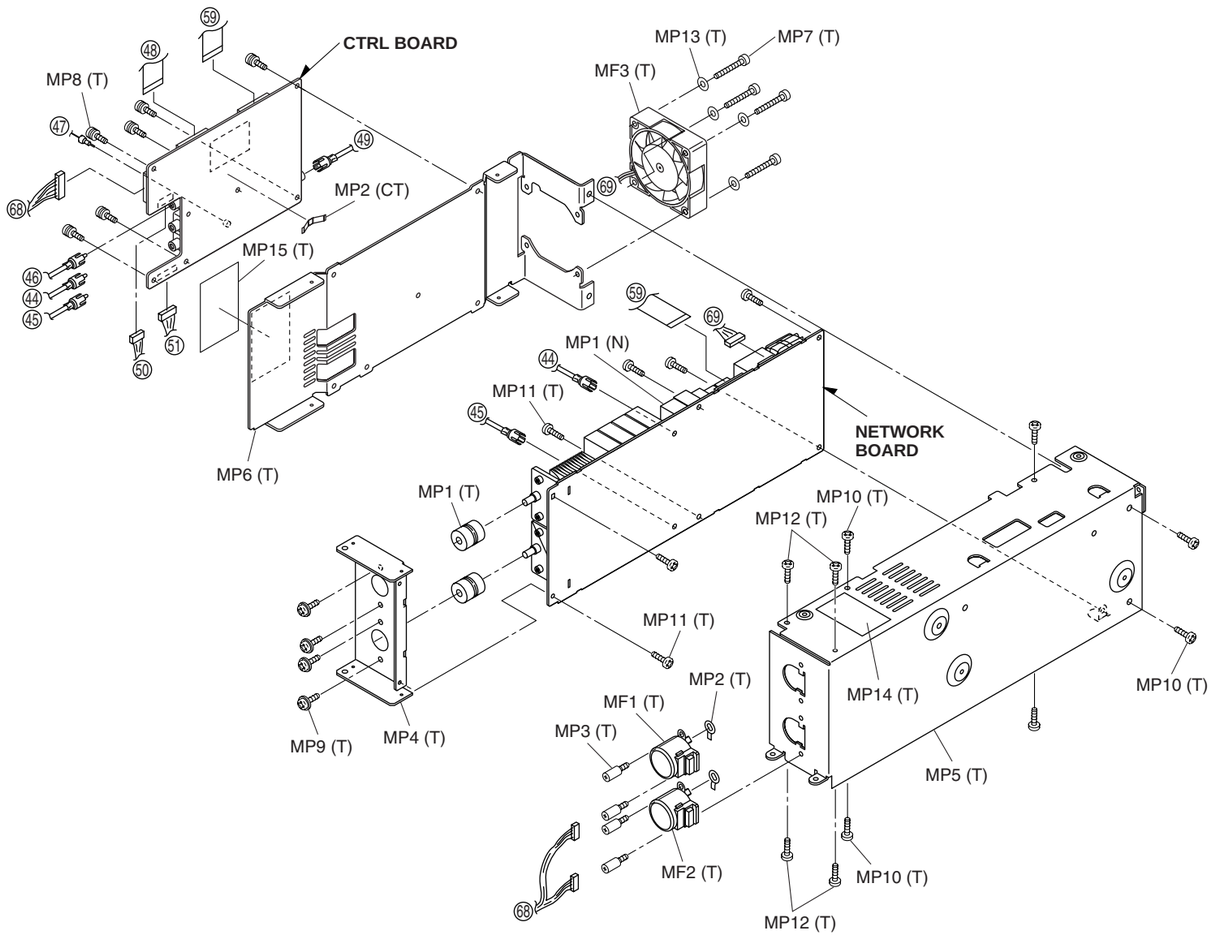


**Unit abberaviations** (C) : CHASSIS PARTS
(B) : BPF UNIT
(T) : TUNER UNIT
(CT) : CTRL BOARD
(N) : NETWORK BOARD

# SECTION 7 SEMI-CONDUCTOR INFORMATION

## • TRANSISTORS AND FET'S

| | | | | |
|---|---|---|---|---|
| **2SA1162 GR**<br>(Symbol: SG)<br> 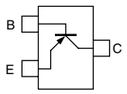 | **2SA1576A T106 R**<br>(Symbol: FR)<br> 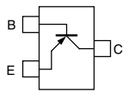 | **2SB1119 S TD**<br>(Symbol: BB)<br> 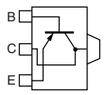 | **2SB1123 T TD**<br>(Symbol: BF)<br> 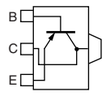 | **2SB1132 T100 R**<br>(Symbol: BAR)<br> 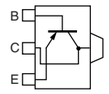 |
| **2SB1201 S**<br>(Symbol: B1201)<br> 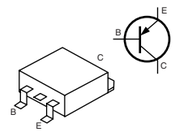 | **2SC3324 GR**<br>(Symbol: CBG)<br> 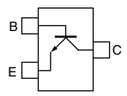 | **2SC3647 S TD**<br>(Symbol: CC)<br> 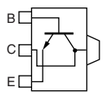 | **2SC3950D**<br>(Symbol: 2042B)<br> 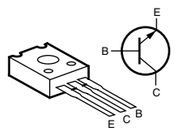 | **2SC4081 T106 R**<br>(Symbol: BR)<br> 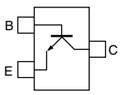 |
| **2SC4081 T106 S**<br>(Symbol: BS)<br> 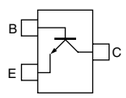 | **2SC4097 T106 Q**<br>(Symbol: CQ)<br> 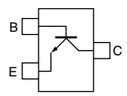 | **2SC4116 Y**<br>(Symbol: LY)<br> 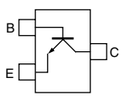 | **2SC4215 O**<br>(Symbol: QO)<br> 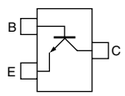 | **2SC4402 3 TL**<br>(Symbol: PT3)<br> 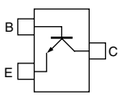 |
| **2SC4406**<br>(Symbol: JT)<br> 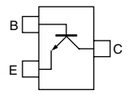 | **2SC4673 D TD**<br>(Symbol: CO)<br> 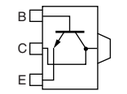 | **2SC4835 R**<br>(Symbol: 3M)<br> 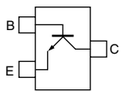 | **2SC5226 4 TL**<br>(Symbol: LN4)<br> 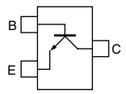 | **2SC5501 4 TR**<br>(Symbol: LN4)<br> 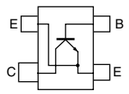 |
| **2SC5551**<br>(Symbol: EB)<br> 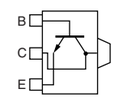 | **2SD1619 T TD**<br>(Symbol: DB)<br> 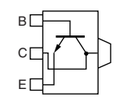 | **2SD1664 T100Q**<br>(Symbol: DAQ)<br> 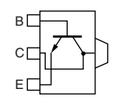 | **2SD1801 S TL**<br>(Symbol: CE)<br> 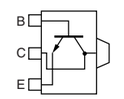 | **2SJ144 GR**<br>(Symbol: VG)<br> 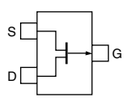 |
| **2SK210 GR**<br>(Symbol: YG)<br> 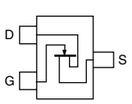 | **2SK515 T1B**<br>(Symbol: X33)<br> 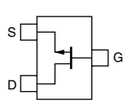 | **2SK880 GR**<br>(Symbol: XG)<br> 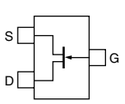 | **2SK882 GR**<br>(Symbol: TGR)<br> 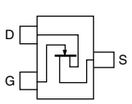 | **2SK3018 T106**<br>(Symbol: KN)<br> 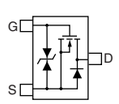 |
| **3SK294**<br>(Symbol: UV)<br> 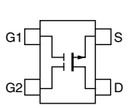 | **CPH3403 TL**<br>(Symbol: KC)<br> 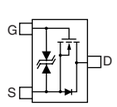 | **DTA114EUA T106**<br>(Symbol: 14)<br> 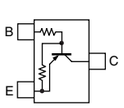 | **DTA144 EE TL**<br>(Symbol: 16)<br> 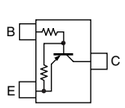 | **DTC114EUA T106**<br>(Symbol: 24)<br> 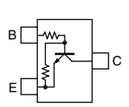 |

| | | | | |
|---|---|---|---|---|
| **DTC114TUA T106**<br>(Symbol: 04)<br> 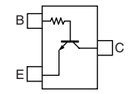 | **DTC144EUA T106**<br>(Symbol: 26_)<br> 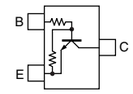 | **DTC144 TE**<br>(Symbol: 06)<br> 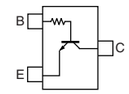 | **DTD113ZK**<br>(Symbol: G21)<br> 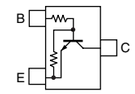 | **MMBFU310LT1**<br>(Symbol: 6C)<br> 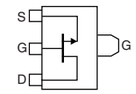 |
| **RD01MUS1**<br>(Symbol: K2)<br> 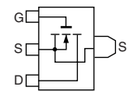 | **PD55003**<br>(Symbol: PD55003)<br> 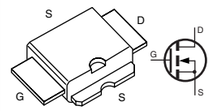 | **RN2427**<br>(Symbol: RG)<br> 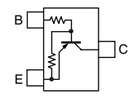 | **SD2918**<br>(Symbol: M113)<br> 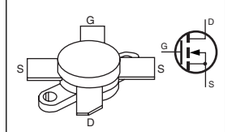 | **SD2931**<br>(Symbol: M174)<br> 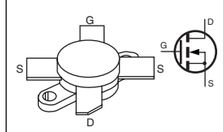 |
| **UMH11N TN**<br>(Symbol: H11)<br> 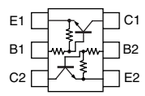 | **XP4311**<br>(Symbol: 3X)<br> 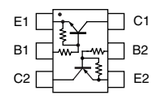 | | | |

## • DIODES

| | | | | |
|---|---|---|---|---|
| **1SR154-400**<br>(Symbol: 14)<br> 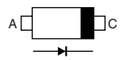 | **1SS301**<br>(Symbol: B3)<br> 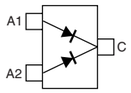 | **1SS312**<br>(Symbol: BF)<br> 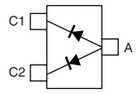 | **1SS319**<br>(Symbol: A4)<br> 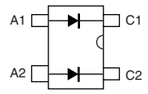 | **1SS355**<br>(Symbol: A)<br> 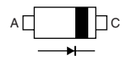 |
| **1SV232**<br>(Symbol: T9)<br> 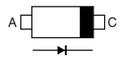 | **1SV263 TL**<br>(Symbol: JV)<br> 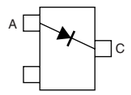 | **1SV307**<br>(Symbol: TX)<br> | **CPH5513 TL**<br>(Symbol: 2B)<br> 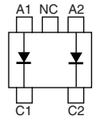 | **DA221 TL**<br>(Symbol: K)<br> 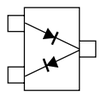 |
| **DAN222TL**<br>(Symbol: N)<br> 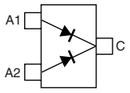 | **DAP222 TL**<br>(Symbol: P)<br> 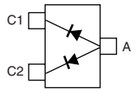 | **DSM3MA4**<br>(Symbol: SA4)<br> 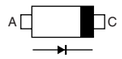 | **HSB88WSTR**<br>(Symbol: Silver line)<br> 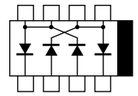 | **HSM88AS TR**<br>(Symbol: C1)<br> 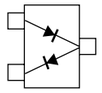 |
| **MA114**<br>(Symbol: 1E)<br> 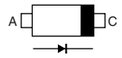 | **MA2S111**<br>(Symbol: A)<br> 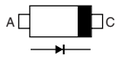 | **MA2S728**<br>(Symbol: B)<br> 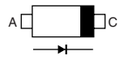 | **MA77**<br>(Symbol: 4B)<br> 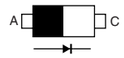 | **MA357**<br>(Symbol: 7K)<br> 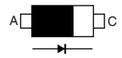 |
| **MA742**<br>(Symbol: M1U)<br> 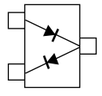 | **MA8033 H**<br>(Symbol: 3^3)<br> 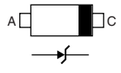 | **MA8047 M**<br>(Symbol: 4-7)<br> 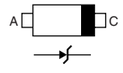 | **MA8091 M**<br>(Symbol: 9-1)<br> 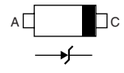 | **MBRD835LT4**<br>(Symbol: B835L)<br> |
| **MMBV3700LT1**<br>(Symbol: 4R)<br> 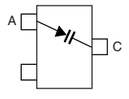 | **RB081L-20**<br>(Symbol: 39)<br> 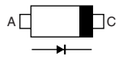 | **RB706F-40 T106**<br>(Symbol: 3J)<br> 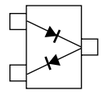 | **RD2.7M B1**<br>(Symbol: 271)<br> 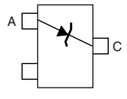 | **RD5.1M T2B2**<br>(Symbol: 512)<br> 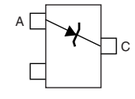 |
| **RD5.6M T2B2**<br>(Symbol: 562)<br> 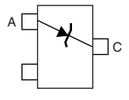 | **XB15A204**<br>(Symbol: None)<br> 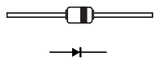 | | | |

# SECTION 8 BOARD LAYOUTS

## 8-1 DISPLAY BOARD

• TOP VIEW

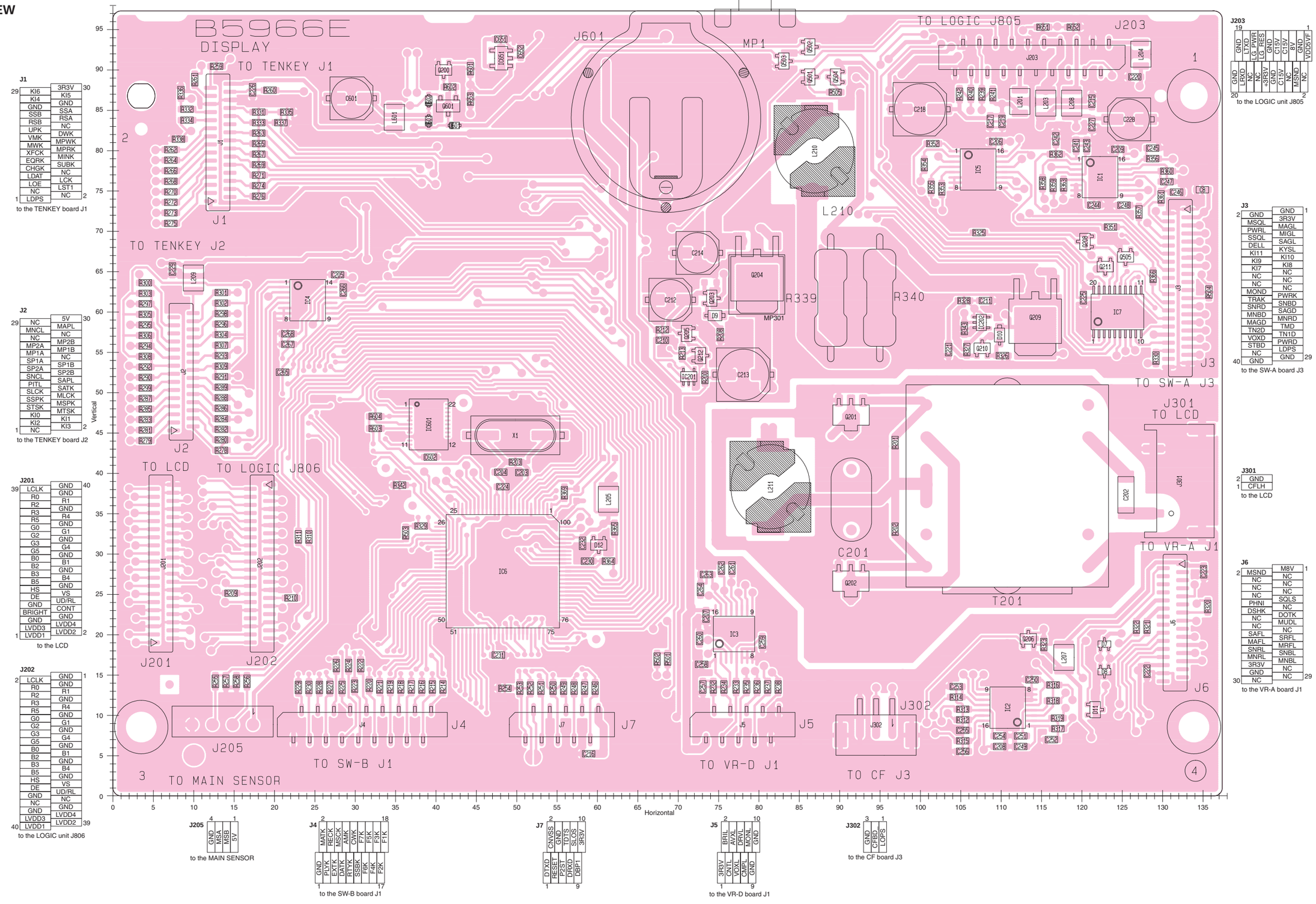


**J1**

| | | | |
|---|---|---|---|
| 29 | KI6 | 3R3V | 30 |
| | KI4 | KI5 | |
| | GND | GND | |
| | SSB | SSA | |
| | RSB | RSA | |
| | UPK | NC | |
| | VMK | DWK | |
| | MWK | MPWK | |
| | XFCK | MPRK | |
| | EQRK | MINK | |
| | CHGK | SUBK | |
| | LDAT | NC | |
| | LOE | LGK | |
| | NC | LST1 | |
| 1 | LDPS | NC | 2 |

to the TENKEY board J1

**J2**

| | | | |
|---|---|---|---|
| 29 | NC | 5V | 30 |
| | MNCL | MAPL | |
| | NC | NC | |
| | MP2A | MP2B | |
| | MP1A | MP1B | |
| | SP1A | NC | |
| | SP2A | SP1B | |
| | SNCL | SP2B | |
| | PITL | SAPL | |
| | SLCK | SATK | |
| | SSPK | MLCK | |
| | STSK | MSPK | |
| | KI0 | MTSK | |
| | KI2 | KI1 | |
| 1 | NC | KI3 | 2 |

to the TENKEY board J2

**J201**

| | | | |
|---|---|---|---|
| 39 | LCLK | GND | 40 |
| | R0 | GND | |
| | R2 | R1 | |
| | R3 | GND | |
| | R5 | R4 | |
| | G0 | GND | |
| | G2 | G1 | |
| | G3 | GND | |
| | G5 | G4 | |
| | B0 | GND | |
| | B2 | B1 | |
| | B3 | GND | |
| | B5 | B4 | |
| | HS | GND | |
| | DE | VS | |
| | GND | UD/RL | |
| | BRIGHT | CONT | |
| | GND | GND | |
| | LVDD3 | LVDD4 | |
| 1 | LVDD1 | LVDD2 | 2 |

to the LCD

**J202**

| | | | |
|---|---|---|---|
| 2 | LCLK | GND | 1 |
| | R0 | GND | |
| | R2 | R1 | |
| | R3 | GND | |
| | R5 | R4 | |
| | G0 | GND | |
| | G2 | G1 | |
| | G3 | GND | |
| | G5 | G4 | |
| | B0 | GND | |
| | B2 | B1 | |
| | B3 | GND | |
| | B5 | B4 | |
| | HS | GND | |
| | DE | VS | |
| | GND | UD/RL | |
| | GND | NC | |
| | GND | GND | |
| | LVDD3 | LVDD4 | |
| 40 | LVDD1 | LVDD2 | 39 |

to the LOGIC unit J806

**J203**

| | | | | | | | | | | | | | | | | | | | | |
|---|---|---|---|---|---|---|---|---|---|---|---|---|---|---|---|---|---|---|---|---|
| 19 | | | | | | | | | | | | | | | | | | | | 1 |
| | GND | LTXD | LG PWR | LG RES | GND | C15V | C15V | 8V | VDDSVF | | | | | | | | | | | |
| | GND | LRXD | NC | NC | +3R3V | GND | C15V | NC | MSND | NC | | | | | | | | | | |
| 20 | | | | | | | | | | | | | | | | | | | | 2 |

to the LOGIC unit J805

**J3**

| | | | |
|---|---|---|---|
| 2 | GND | GND | 1 |
| | MSQL | 3R3V | |
| | PWRL | MAGL | |
| | SSQL | MIGL | |
| | DELL | SAGL | |
| | KI11 | KYSL | |
| | KI9 | KI10 | |
| | KI7 | KI8 | |
| | NC | NC | |
| | NC | NC | |
| | MOND | NC | |
| | TRAK | PWRK | |
| | SNRD | SNBD | |
| | MNBD | SAGD | |
| | MAGD | MNRD | |
| | TNZD | TMD | |
| | VOXD | TN1D | |
| | STBD | PWRD | |
| | NC | LDPS | |
| 40 | GND | GND | 29 |

to the SW-A board J3

**J301**

| | | |
|---|---|---|
| 2 | GND | |
| 1 | CFLH | |

to the LCD

**J6**

| | | | |
|---|---|---|---|
| 2 | MSND | M8V | 1 |
| | NC | NC | |
| | NC | NC | |
| | NC | NC | |
| | PHNI | SQLS | |
| | DSHK | NC | |
| | NC | DOTK | |
| | NC | MUDL | |
| | SAFL | NC | |
| | MAFL | SRFL | |
| | SNRL | MRFL | |
| | MNRL | SNBL | |
| | 3R3V | MNBL | |
| | GND | NC | |
| 30 | NC | NC | 29 |

to the VR-A board J1

**J205**

| | | | | |
|---|---|---|---|---|
| 4 | | | | 1 |
| | GND | MSA | MSB | 5V |

to the MAIN SENSOR

**J4**

| | | | | | | | | | |
|---|---|---|---|---|---|---|---|---|---|
| 2 | | | | | | | | | 18 |
| | MATK | RECK | MSCK | AMK | CWK | F7K | F5K | F3K | F1K |
| | GND | PLYK | EXTK | DATK | RTYK | SSBK | F6K | F4K | F2K |
| 1 | | | | | | | | | 17 |

to the SW-B board J1

**J7**

| | | | | | |
|---|---|---|---|---|---|
| 2 | | | | | 10 |
| | CNVSS | GND | TDTS | SLOS | 3R3V |
| | DTXD | RESET | P2ST | DRXD | DBPT |
| 1 | | | | | 9 |

**J5**

| | | | | | |
|---|---|---|---|---|---|
| 2 | | | | | 10 |
| | BRIL | AVXL | DRVL | MONL | GND |
| | 3R3V | CNTL | VOXL | CMPL | GND |
| 1 | | | | | 9 |

to the VR-D board J1

**J302**

| | | | |
|---|---|---|---|
| 3 | | | 1 |
| | GND | CFBD | LOPS |

to the CF board J3

• **BOTTOM VIEW (DISPLAY BOARD)**

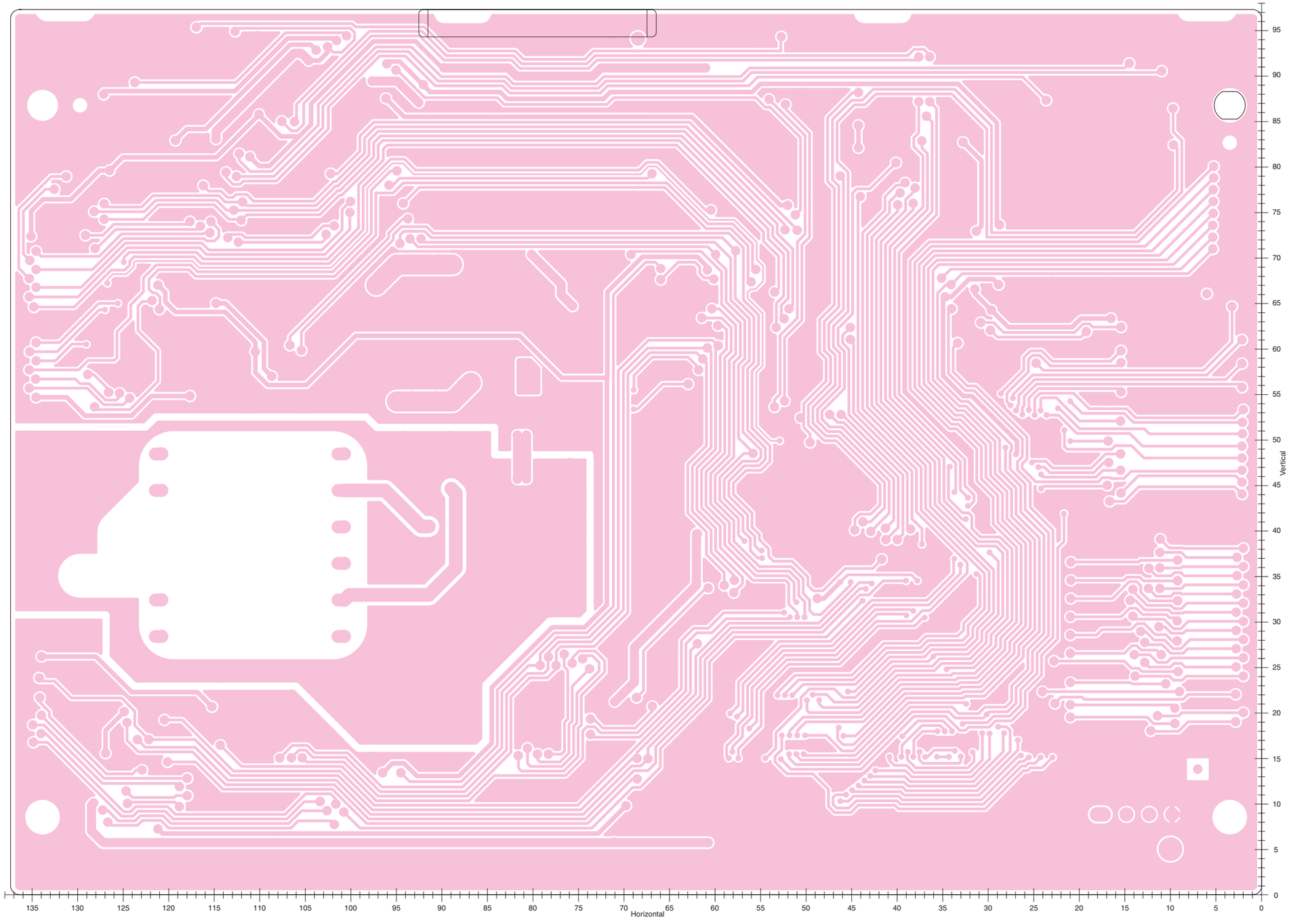

## 8-2 SW-A BOARD

• TOP VIEW

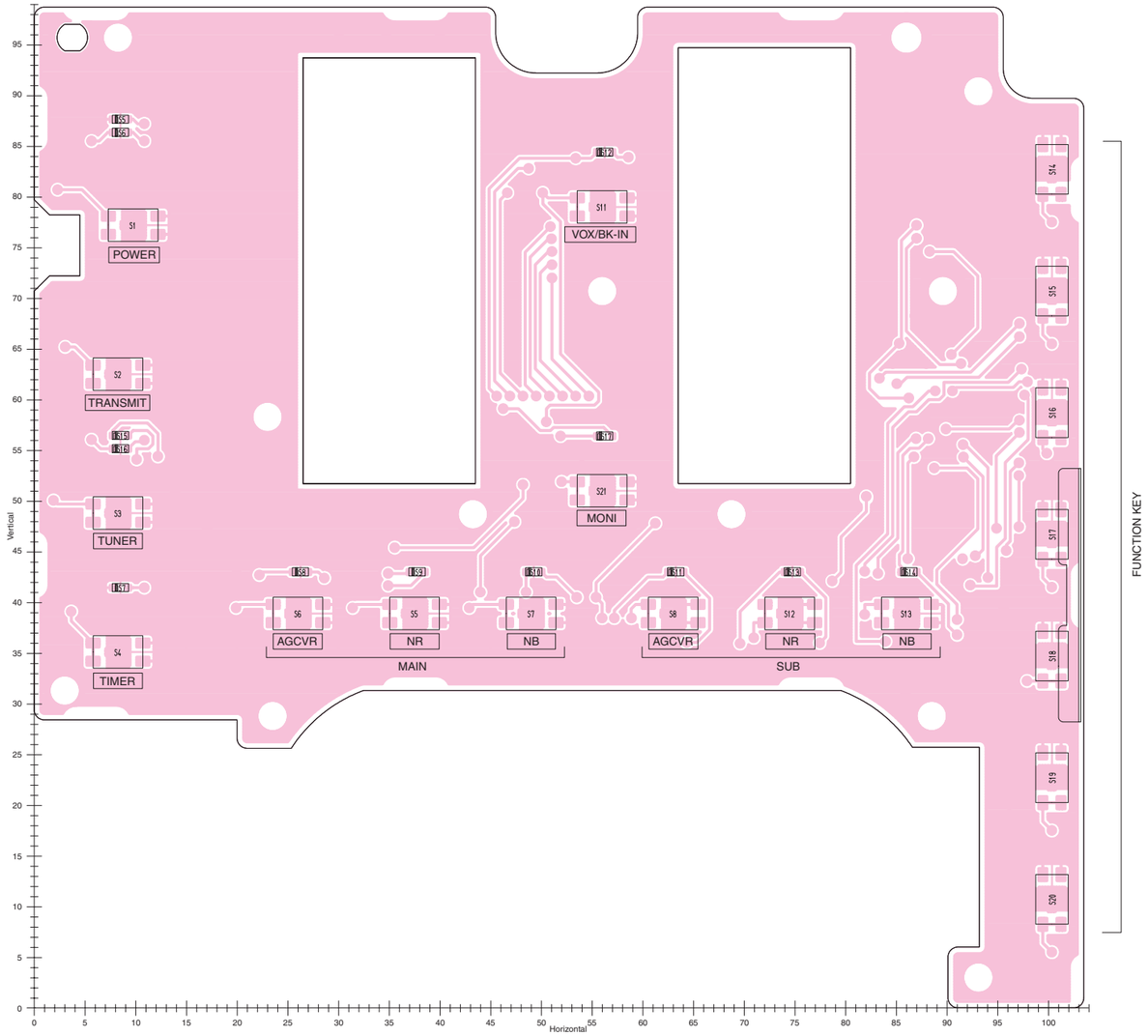


## 8-3 SW-B BOARD

• TOP VIEW

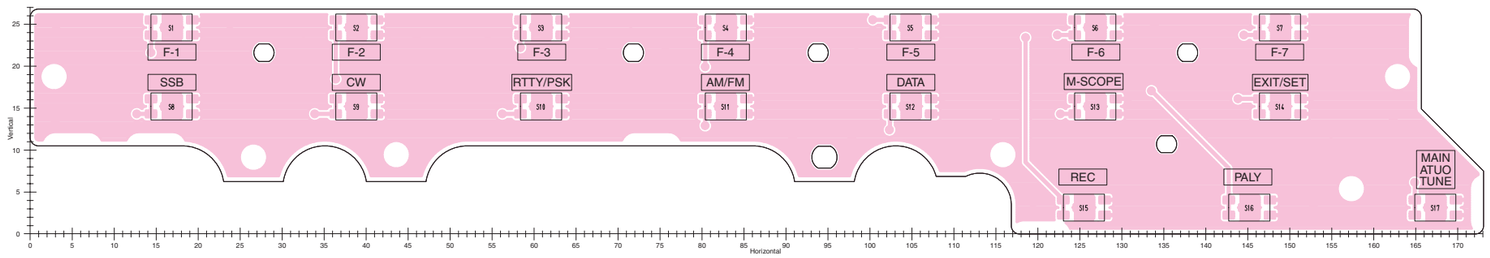


## 8-4 SW-C BOARD

• TOP VIEW

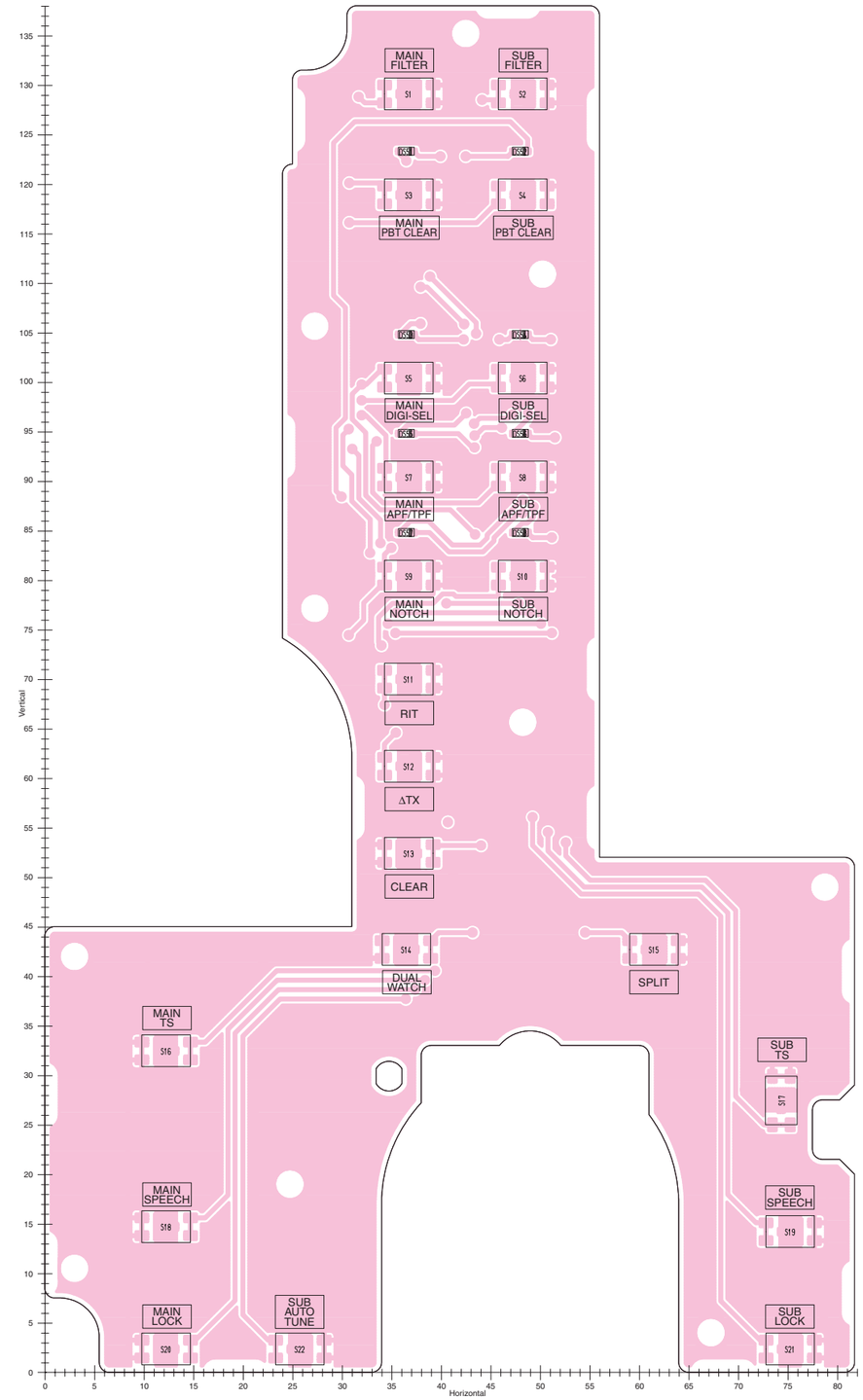

## • BOTTOM VIEW (SW-C BOARD)

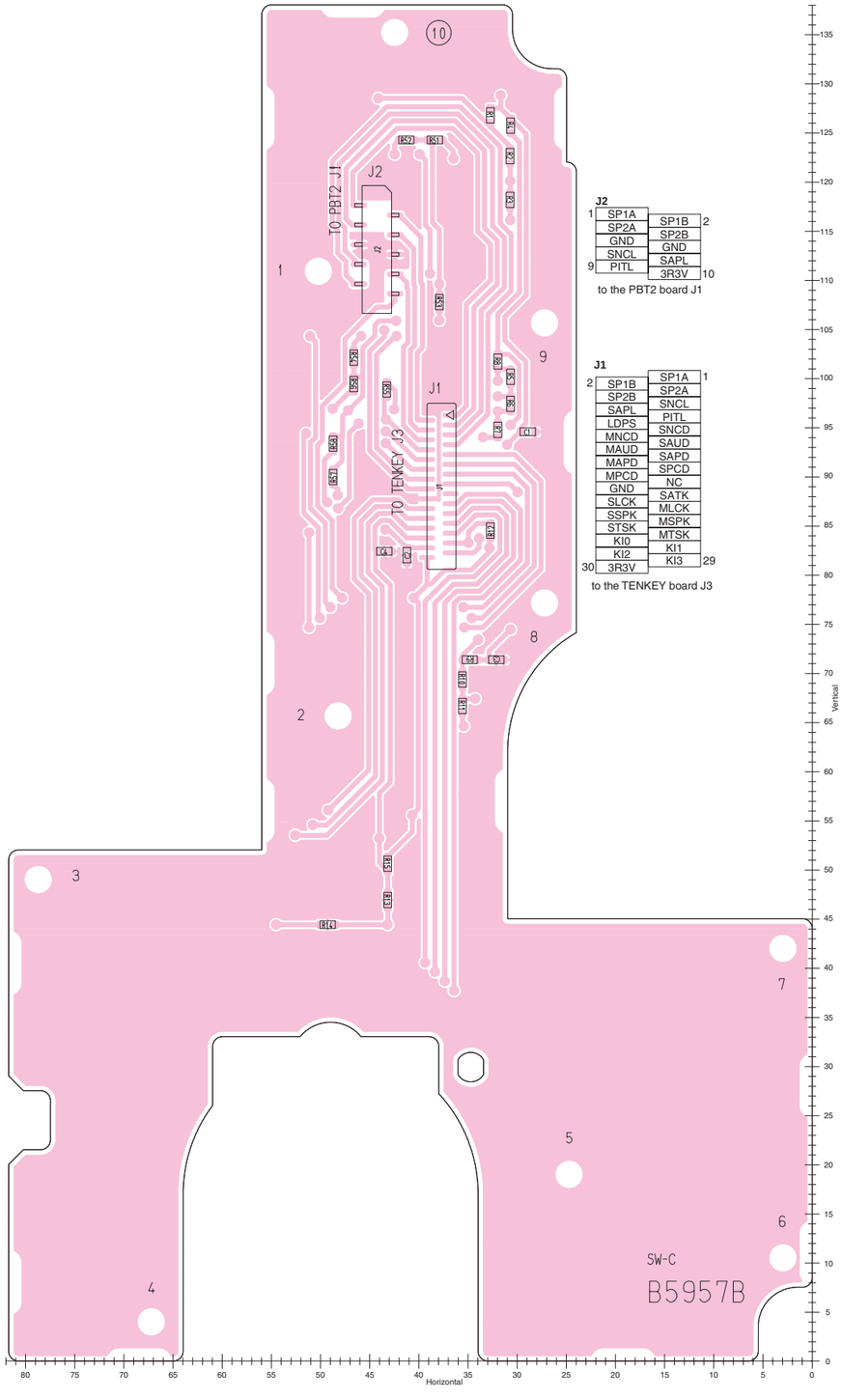


**J2**

| | | | |
|---|---|---|---|
| 1 | SP1A | SP1B | 2 |
| | SP2A | SP2B | |
| | GND | GND | |
| | SNCL | SAPL | |
| 9 | PITL | 3R3V | 10 |

to the PBT2 board J1

**J1**

| | | | |
|---|---|---|---|
| 2 | SP1B | SP1A | 1 |
| | SP2B | SP2A | |
| | SAPL | SNCL | |
| | LDPS | PITL | |
| | MNCD | SNCD | |
| | MAUD | SAUD | |
| | MAPD | SAPD | |
| | MPCD | SPCD | |
| | GND | NC | |
| | SLCK | SATK | |
| | SSPK | MLCK | |
| | STSK | MSPK | |
| | KI0 | MTSK | |
| | KI2 | KI1 | |
| 30 | 3R3V | KI3 | 29 |

to the TENKEY board J3

**J3**

| | | | |
|---|---|---|---|
| 29 | GND | GND | 30 |
| | MSQL | 3R3V | |
| | PWRL | MAGL | |
| | SSQL | MIGL | |
| | DELL | SAGL | |
| | KI11 | KYSL | |
| | KI9 | KI10 | |
| | KI7 | KI8 | |
| | NC | NC | |
| | NC | NC | |
| | MOND | NC | |
| | TRAK | PWRK | |
| | SNRD | SNBD | |
| | MNBD | SAGD | |
| | MAGD | MNRD | |
| | TN2D | TMD | |
| | VOXD | TN1D | |
| | STBD | PWRD | |
| | NC | LDPS | |
| 1 | GND | GND | 2 |

to the DISPLAY board J3

## • BOTTOM VIEW (SW-A BOARD)

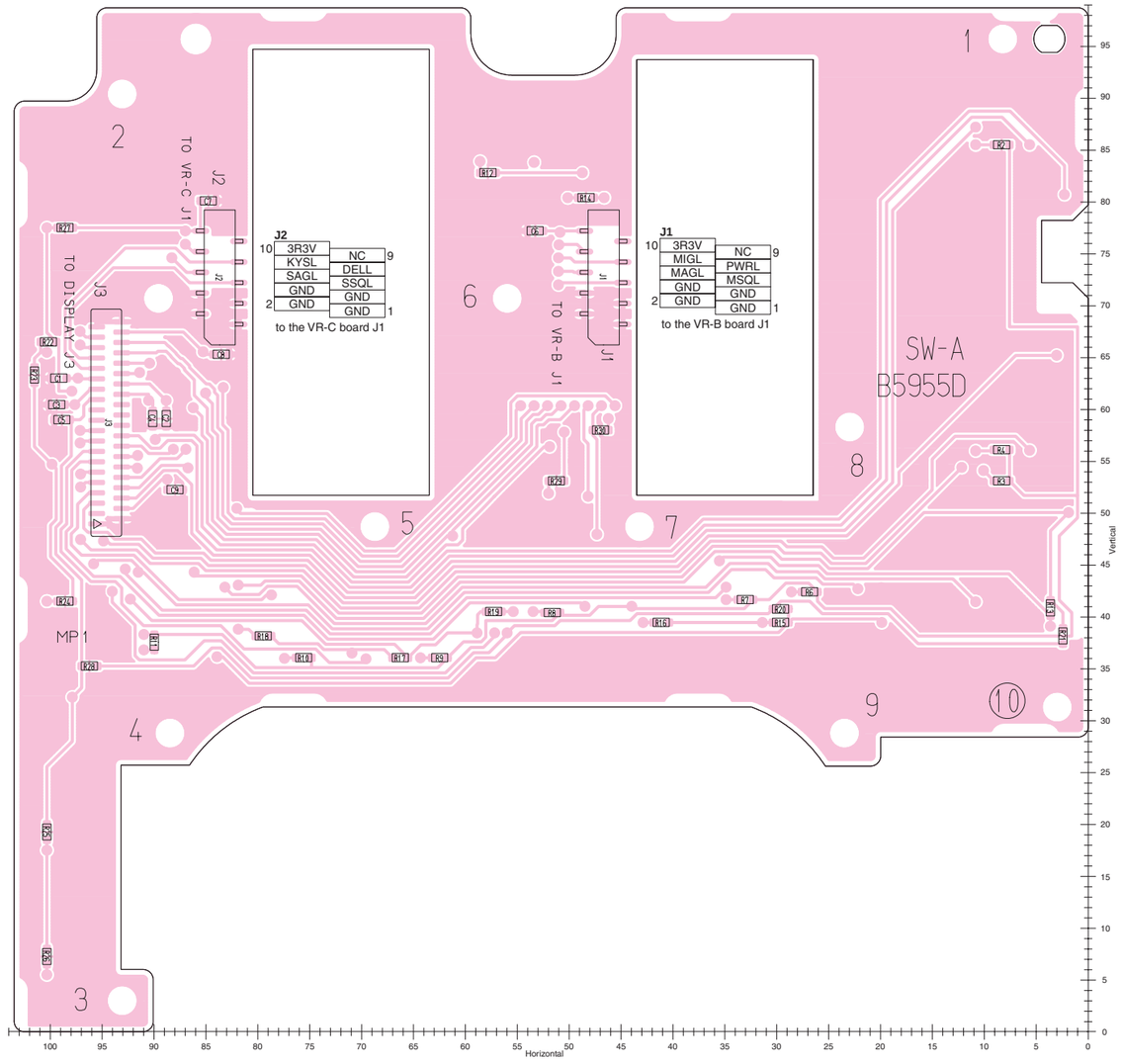


**J2**

| | | | |
|---|---|---|---|
| 10 | 3R3V | NC | 9 |
| | KYSL | DELL | |
| | SAGL | SSQL | |
| | GND | GND | |
| 2 | GND | GND | 1 |

to the VR-C board J1

**J1**

| | | | |
|---|---|---|---|
| 10 | 3R3V | NC | 9 |
| | MIGL | PWRL | |
| | MAGL | MSQL | |
| | GND | GND | |
| 2 | GND | GND | 1 |

to the VR-B board J1

## • BOTTOM VIEW (SW-B BOARD)

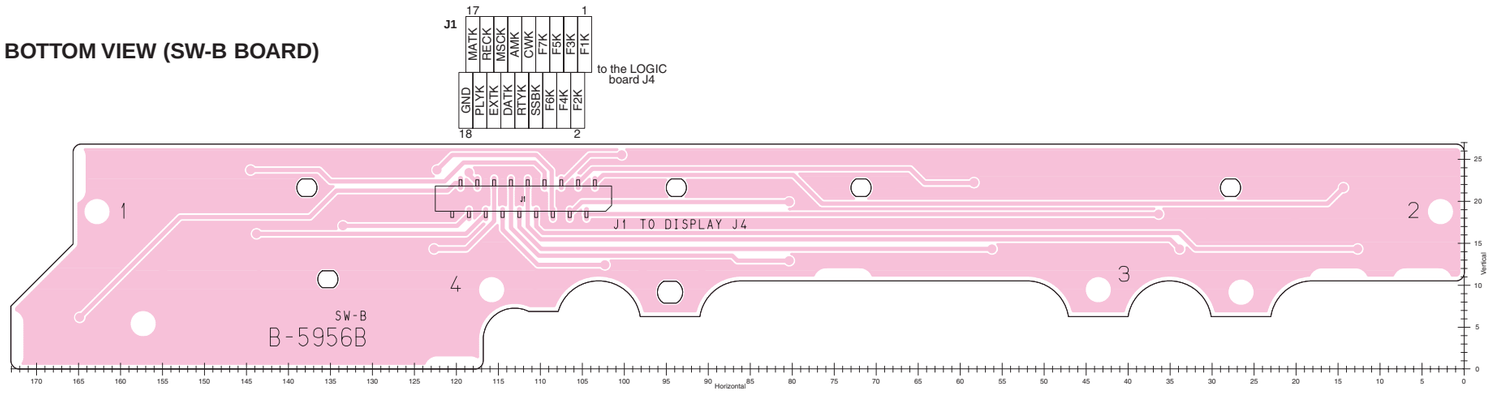


**J1**

| | | | | | | | | | | | | | | | | | |
|---|---|---|---|---|---|---|---|---|---|---|---|---|---|---|---|---|---|
| 17 | | | | | | | | | | | | | | | | | 1 |
| MATK | RECK | MSCK | AMK | CMK | CYK | F5K | F3K | F1K | | | | | | | | | |
| GND | PLYK | EXTK | DATK | RTYK | SSBK | F6K | F4K | F2K | | | | | | | | | |
| 18 | | | | | | | | | | | | | | | | | 2 |

to the LOGIC board J4

## 8-5 VR-A BOARD

• TOP VIEW

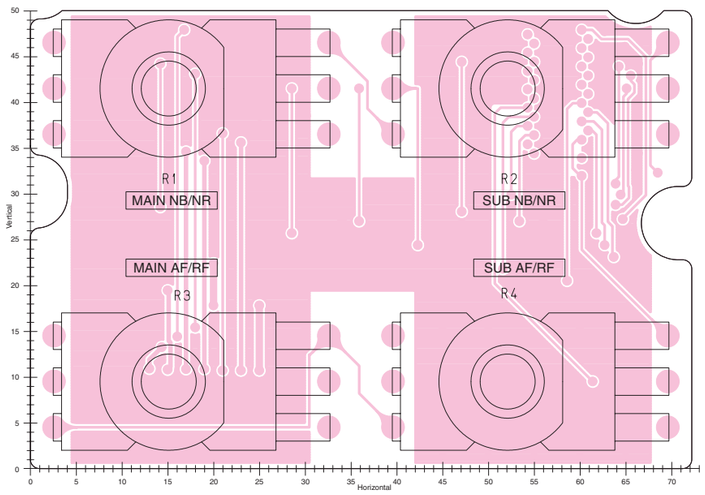


## 8-6 VR-B BOARD

• TOP VIEW

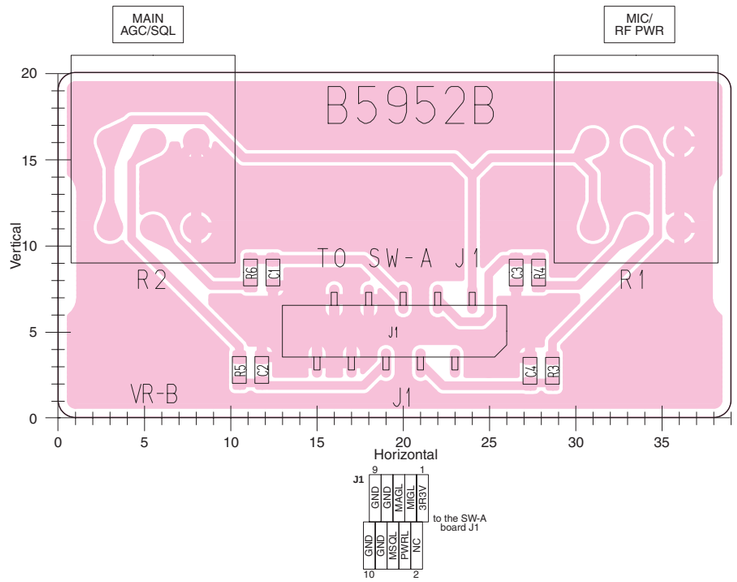


## 8-7 VR-C BOARD

• TOP VIEW

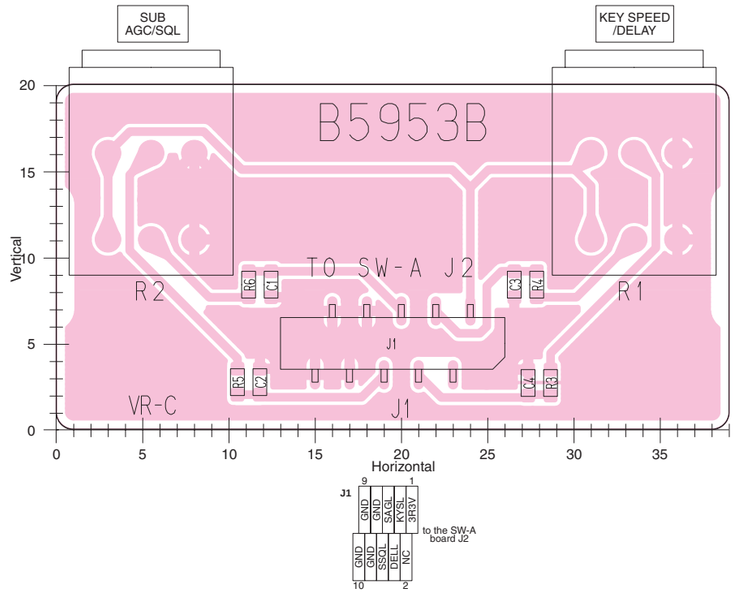


## 8-8 VR-D BOARD

• TOP VIEW

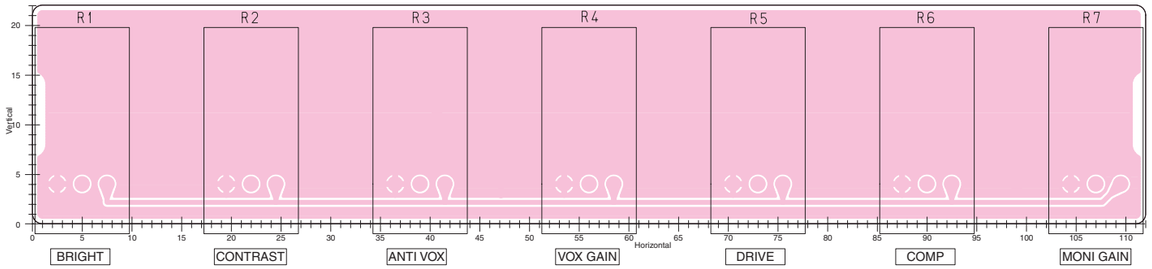


## 8-9 JACK BOARD

• TOP VIEW

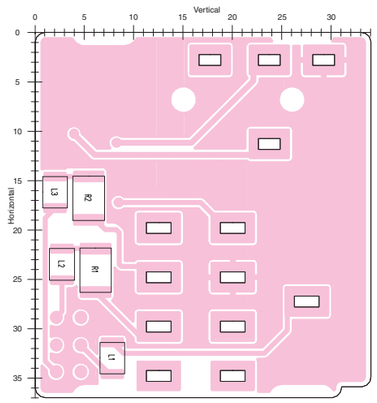


## 8-10 MIC BOARD

• TOP VIEW

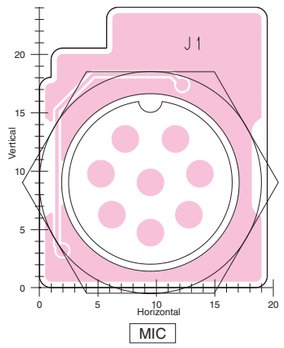


## 8-11 CF BOARD

• TOP VIEW

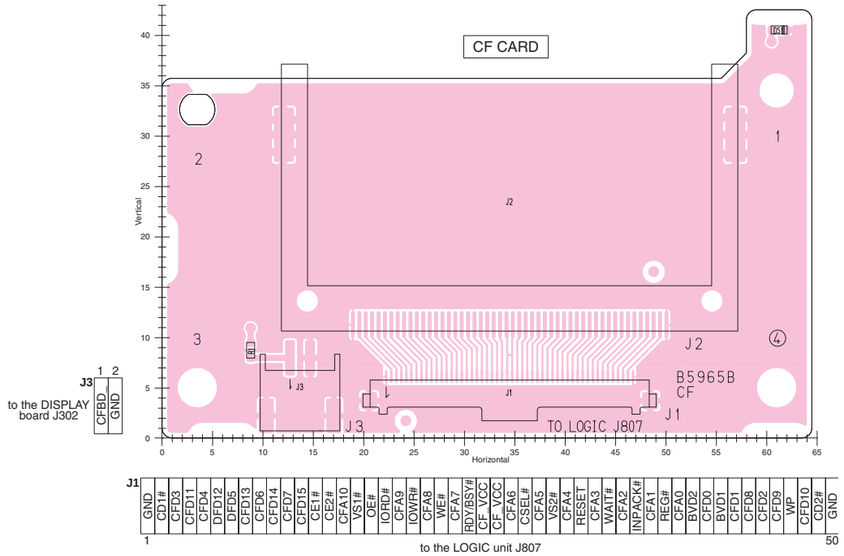

## • BOTTOM VIEW (VR-C BOARD)

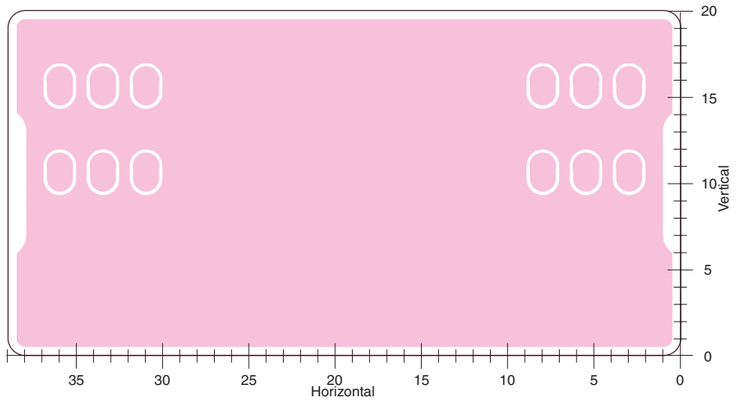


## • BOTTOM VIEW (VR-B BOARD)

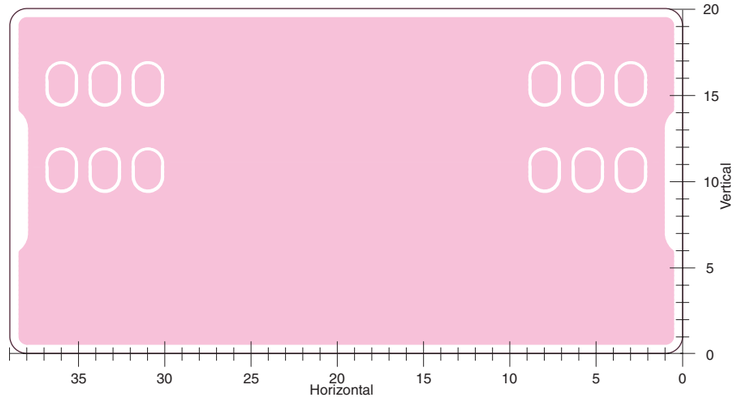


## • BOTTOM VIEW (VR-A BOARD)

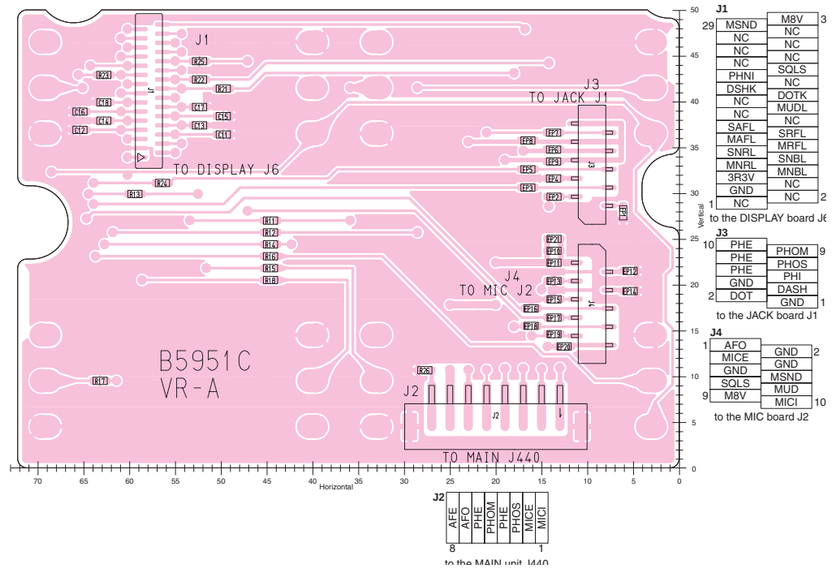


## • BOTTOM VIEW (VR-D BOARD)

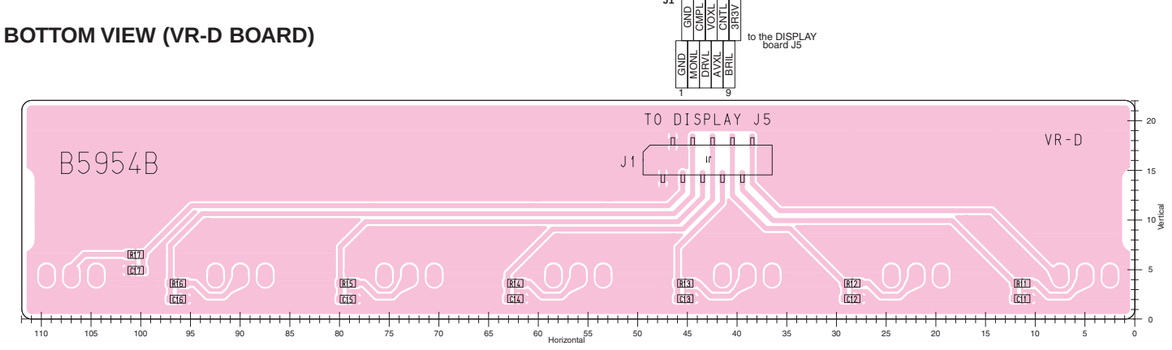


## • BOTTOM VIEW (CF BOARD)

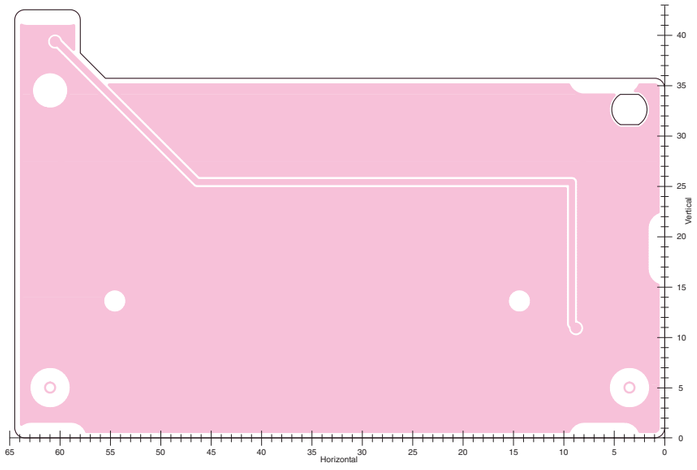


## • BOTTOM VIEW (MIC BOARD)

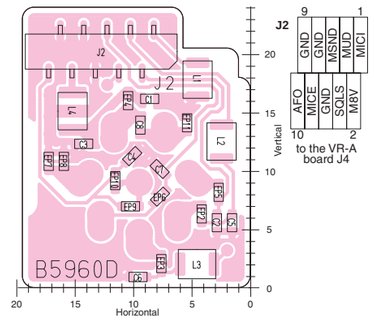


## • BOTTOM VIEW (JACK BOARD)

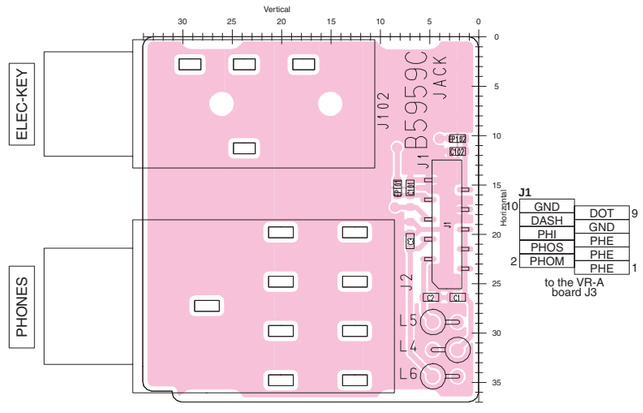

## 8-12 TENKEY BOARD

• TOP VIEW

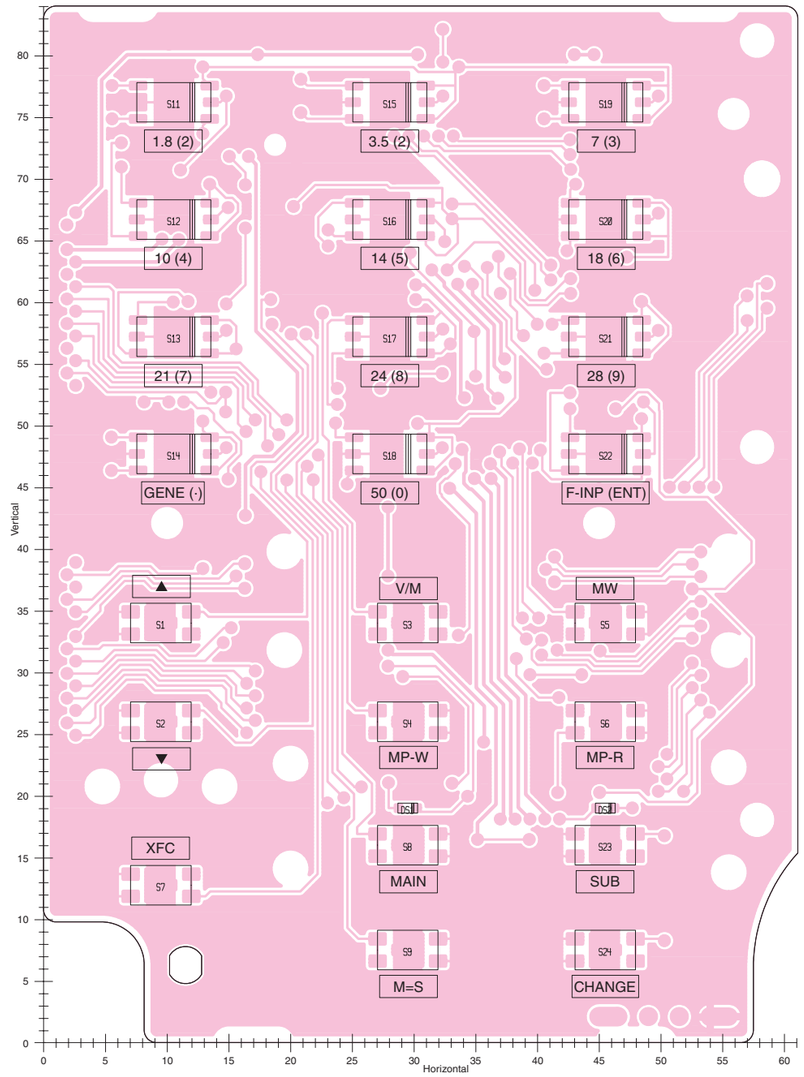


## 8-13 LED BOARD

• TOP VIEW

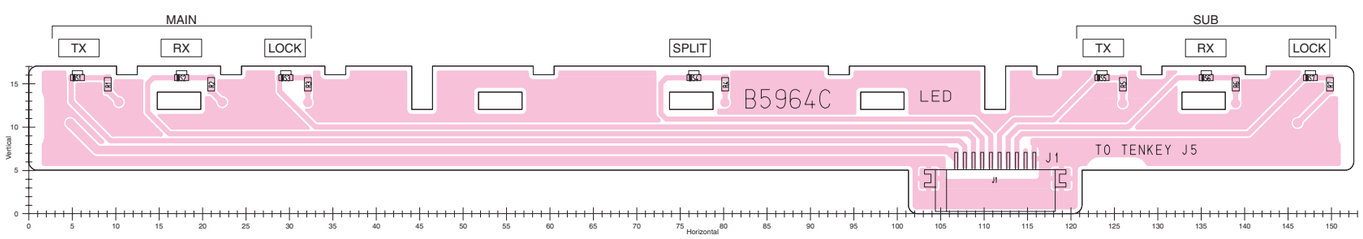


J1 (to the TENKEY board J5): 10 LDPS, MTXD, MRXD, MCLD, SPLD, STXD, SRXD, SLCD, NC, GND 1

## 8-14 PBT1 BOARD

• TOP VIEW

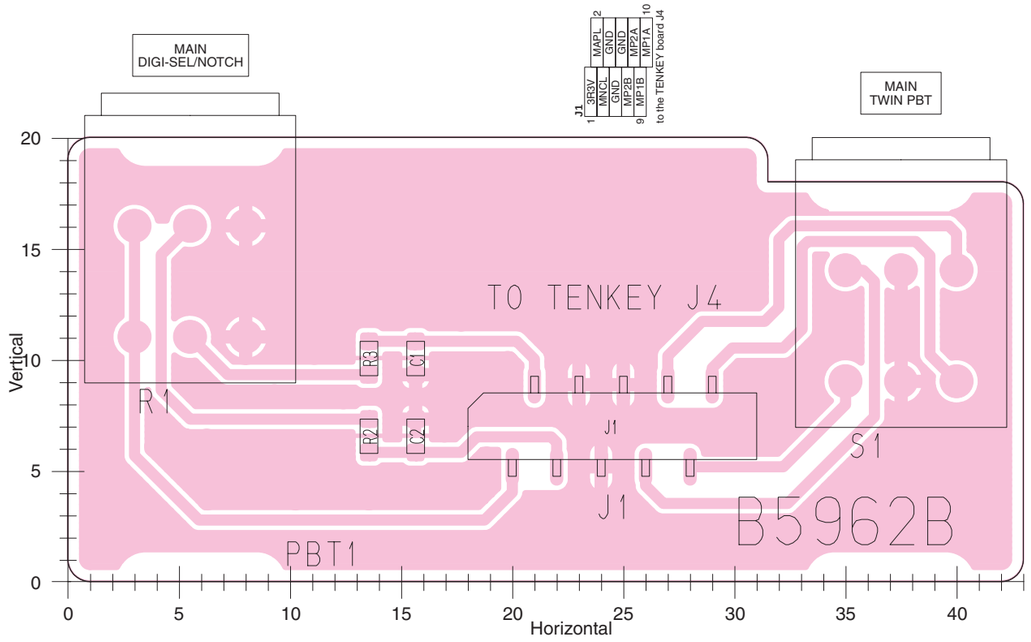


## 8-15 PBT2 BOARD

• TOP VIEW

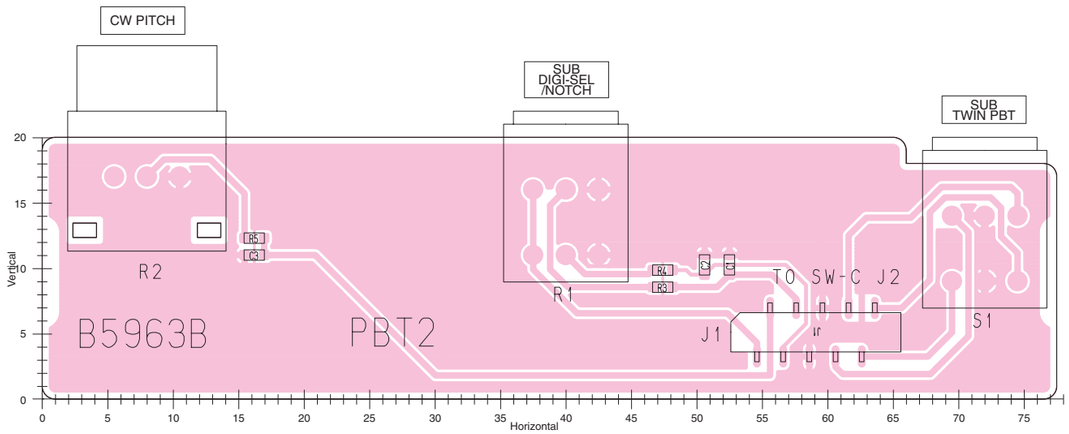


J1 (to the SW-C board J2): 2 PITL, SNCL, GND, SP2A, SP1A 10; 1 3R3V, SAPL, GND, SP2B, SP1B 9

• **BOTTOM VIEW (PBT1 BOARD)**

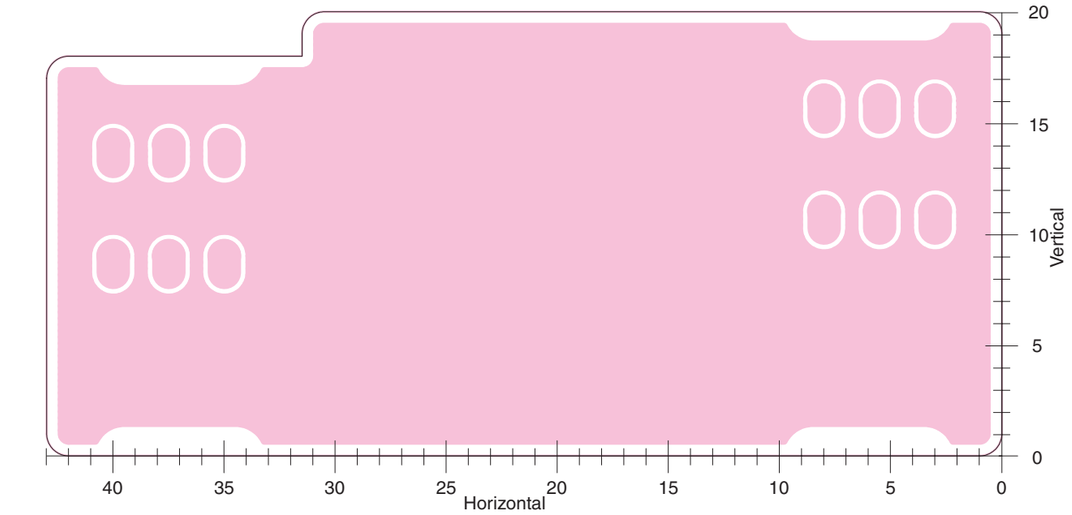


• **BOTTOM VIEW (PBT2 BOARD)**

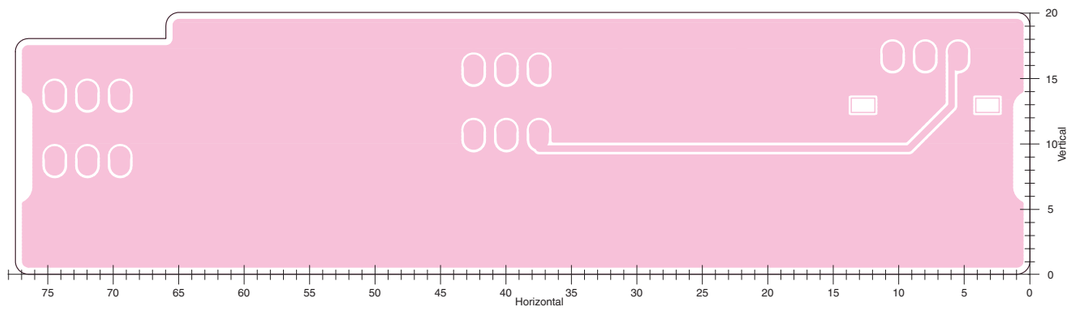


• **BOTTOM VIEW (TENKEY BOARD)**

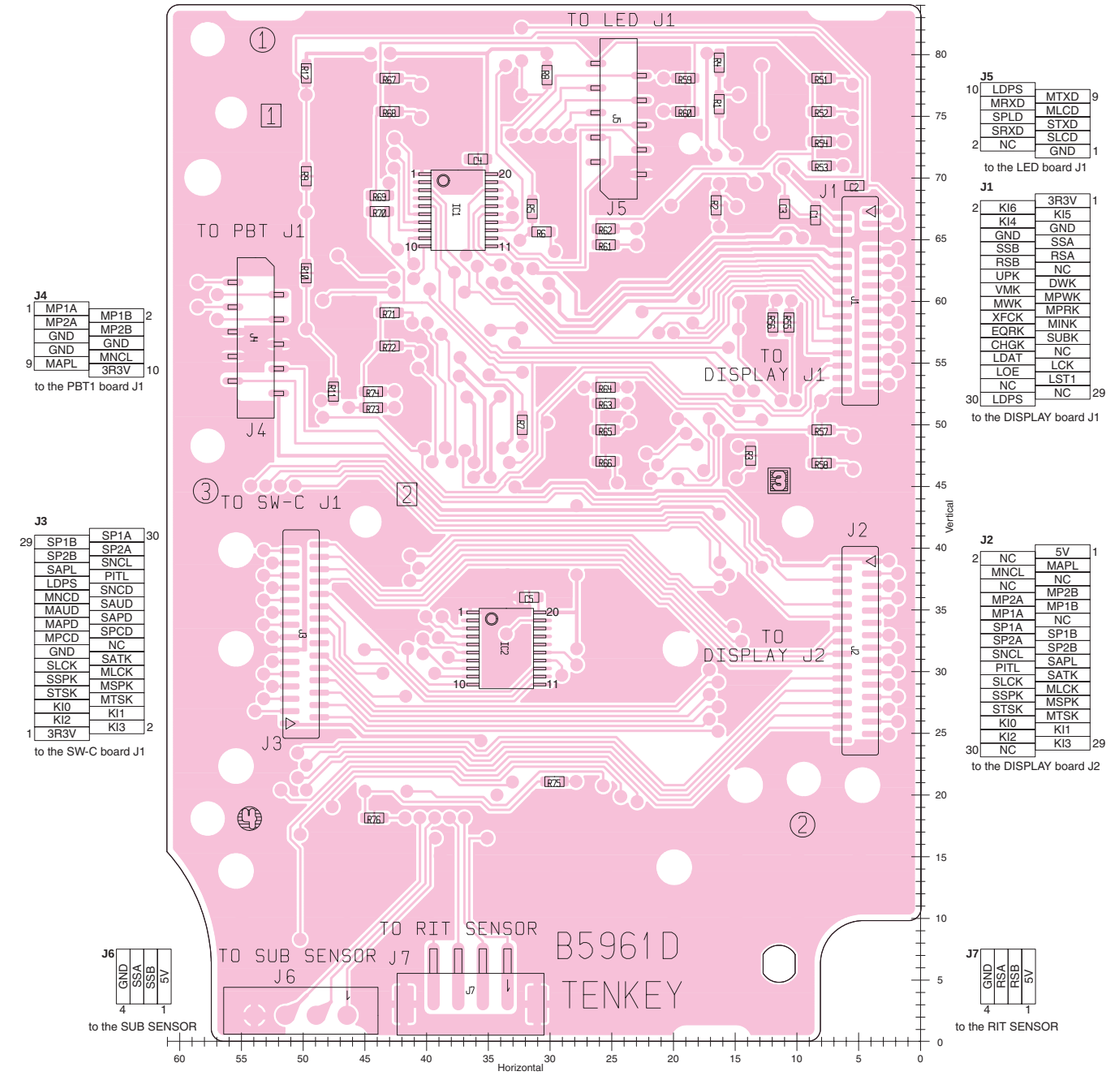


• **BOTTOM VIEW (LED BOARD)**

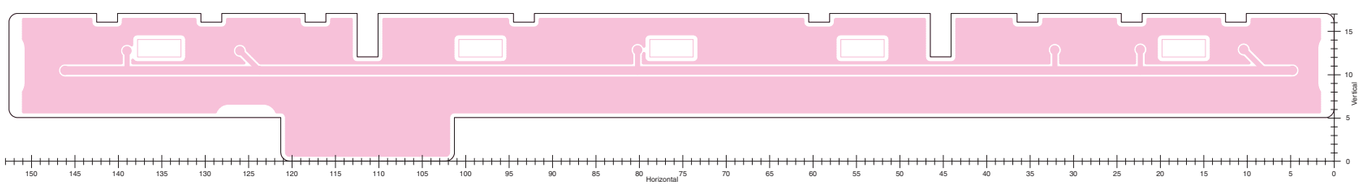

# 8-16 LOGIC UNIT

• **TOP VIEW**

**J812**

| | | | | | | | | | | | |
|---|---|---|---|---|---|---|---|---|---|---|---|
| GND | BPCKA | BPSTA | BPDAT | BPCKB | BPSTB | NC | +15V | +3R3V | T8V | MR8V | GND |

12 … 1 — to the BPF unit J1

**J824**

| | |
|---|---|
| FANG | FAN |

2 1 — to the PA unit MF1

**J823**

| | |
|---|---|
| SPE | SPO |

1 2 — to the CHASSIS unit SP1

**J1**

| | | |
|---|---|---|
| 1 | +3R3V | +3R3V | 30 |
| | +3R3V | A22 | |
| | A21 | A20 | |
| | A19 | A18 | |
| | A17 | A16 | |
| | A15 | A14 | |
| | A13 | A12 | |
| | A11 | A10 | |
| | A9 | A8 | |
| | A7 | A6 | |
| | A5 | A4 | |
| | A3 | A2 | |
| | A1 | A0 | |
| | A23 | GND | |
| 15 | GND | GND | 16 |

to the MEMORY board J1

**J2**

| | | | |
|---|---|---|---|
| 1 | +3R3V | +3R3V | 40 |
| | CE01 | +3R3V | |
| | CE00 | CE11 | |
| | CE02 | CE10 | |
| | CE21 | CE12 | |
| | CE20 | CE31 | |
| | CE22 | CE30 | |
| | VPEN | CE32 | |
| | RP# | WE# | |
| | OE# | STS | |
| | D15 | D7 | |
| | D14 | D6 | |
| | D13 | D5 | |
| | D12 | D4 | |
| | D11 | D3 | |
| | D10 | D2 | |
| | D9 | D1 | |
| | D8 | D0 | |
| | GND | BYTE# | |
| 20 | GND | GND | 21 |

to the MEMORY board J2

**J820**

| | | | | | | | |
|---|---|---|---|---|---|---|---|
| LG_PWR | GND | −12V | +15V | +15V | +8V | +5V | +3R3V | GND |

1 … 10 — to the DC-DC unit J4

**J821**

| | | | | | |
|---|---|---|---|---|---|
| GND | VDD1R5 | VDD3R3 | VDD5 | PWRS | C15V | GND |

1 … 7 — to the DC-DC unit J3

**J805**

| | | | | | | | | | | | | | | | | | | | | |
|---|---|---|---|---|---|---|---|---|---|---|---|---|---|---|---|---|---|---|---|---|
| VDD5VF | NC | GND | MSND | +8V | NC | C15V | C15V | GND | GND | +3R3C | LG_RES | NC | LG_PWR | NC | LTXD | LRXD | GND | GND |
| 20 | | | | | | | | | | | | | | | | | | | | 1 |

to the DISPLAY board J203

**J809**

| | | | | | | | | | | | | | | | | | | | | |
|---|---|---|---|---|---|---|---|---|---|---|---|---|---|---|---|---|---|---|---|---|
| 1 | EXRL1 | EXRL2 | TRV | RTKI | SENI | SEND | ASND | T8V | MR8V | SR8V | RSTBB | RSTBA | ASTB2 | ASTB1 | MSTB2 | MSTB1 | MCK | MDAT | VOXAFE | CIVE | 39 |
| | FORV | REFV | FANV | IDL | VDL | ALCL | THML | SQLAM | SQLAS | SQLM | SQLS | GNDS | DULSA | DULSB | KEY | GND | LED1 | LED0 | VOXAF | CIV | |
| 2 | | | | | | | | | | | | | | | | | | | | | 40 |

to the MAIN unit J900

**J808**

| | | | | | | | | | | | | | | | | | | | | |
|---|---|---|---|---|---|---|---|---|---|---|---|---|---|---|---|---|---|---|---|---|
| 1 | DSPK | DSPR | DFRA | DFXA | DX1A | NSQA | VSQA | RTDA | TNDA | DFRB | DFXB | NSQB | VSQB | RTDB | TNDB | SYNCIO | METM | METS | GND | | 39 |
| | SCK | SDAT | SST1 | SPS0 | SST2 | GND | DFXS | DFRS | RX1S | DRES | FRWT | DFRT | DX1T | DFXT | DV0X | DAVOX | DSKY | CTFL | EPAD | MUTE1 | |
| 2 | | | | | | | | | | | | | | | | | | | | | 40 |

to the MAIN unit J940

**J813**

| | | | | | | | | | | | |
|---|---|---|---|---|---|---|---|---|---|---|---|
| 19 | NC | DRESH | DSDAA | DSCKA | DSCLA | DSDAB | DSCLB | DSTBB | DSAPB | +15V | GND | 1 |
| | GND | +3R3V | DSCLA | DDAT | DSTBA | DSAPA | DSDAB | DSCNB | +15V | NC | | |
| 20 | | | | | | | | | | | | 2 |

to the DIGISEL unit J10

**J811**

| | | | |
|---|---|---|---|
| 1 | GND | GNDL | 2 |
| | IKEY | ISTA | |
| | GNDL | TDRS | |
| | GND | TCK | |
| | TDAT | CSTB | |
| | FSTB | TOE | |
| | GND | REFV | |
| | FORV | T8V | |
| | +3R3V | −12V | |
| | GND | GND | |
| | GND | +15V | |
| 23 | +15V | +15V | 24 |

to the CTRL board J1

**J814**

| | | | |
|---|---|---|---|
| 10 | GND | OCK | 9 |
| | ODAT | OCS | |
| | OSS2 | OSS1 | |
| 2 | P+8V | P+15V | |
| | P+15V | GND | 1 |

to the OSC unit J2

**J815**

| | | | |
|---|---|---|---|
| 1 | GND | P+15V | 2 |
| | P+15V | R8V | |
| | T8V | P+5V | |
| | P+5V | GND | |
| | GND | PSLB | |
| | PSTB | C2B2 | |
| | C2B1 | GND | |
| | GND | PCKB | |
| | PDATB | GND | |
| | GND | DRES | |
| 21 | UNLKB | GND | 22 |

to the RXPLL-B unit J2

**J803**

| | |
|---|---|
| GND | 1 |
| RED | |
| RGND | |
| GREEN | |
| GGND | |
| BLUE | |
| BGND | |
| HC | |
| SGND | |
| VSYNC | |
| GND | 11 |

to the SCOPE unit J909

**J804**

| | | | | |
|---|---|---|---|---|
| GND | VBUS1 | D−1 | D+1 | GND |
| 1 | | | | 5 |

to the SCOPE unit J908

**J822**

| | |
|---|---|
| SPO | SPE |

1 2 — to the MAIN unit J142

**J825**

| | | | | | | |
|---|---|---|---|---|---|---|
| GND | GND | MRXD2# | MTXD2 | CISEL | GND | MRXD1# | MTXD1 |
| 8 | | | | | | 1 |

to the SCOPE unit J910

**J807**

| | | | | | | | | | | | | | | | | | | | | | | | | | | |
|---|---|---|---|---|---|---|---|---|---|---|---|---|---|---|---|---|---|---|---|---|---|---|---|---|---|---|
| GND | CD1# | CFD3 | CFD4 | CFD11 | CFD12 | CFD5 | CFD13 | CFD6 | CFD14 | CFD7 | CFD15 | CE2# | CFA10 | VS1# | OE# | IORD# | CFA9 | IOWR# | CFA8 | WE# | CFA7 | RDY/BSY# | CF_VCC | CF_VCC | CFA6 | CSEL# |
| CFA5 | VS2# | CFA4 | RESET | WAIT# | CFA3 | CFA2 | INPACK# | CFA1 | REG# | CFA0 | BVD2 | CFD0 | BVD1 | CFD1 | CFD8 | CFD2 | CFD9 | WP | CFD10 | CD2# | GND | | | | | |
| 50 | | | | | | | | | | | | | | | | | | | | | | | | | | 1 |

to the CF board J1

**J810**

| | | | | | | | | | | | | | |
|---|---|---|---|---|---|---|---|---|---|---|---|---|---|
| RXMREC | RXMRECE | RXSREC | RXSRECE | MPLAY | MPLAYE | SPLAY | SPLAYE | MICREC | MICRECE | MICPLAY | MICPLAYE | GND | |
| 1 | | | | | | | | | | | | | 13 |

to the MAIN unit J451

**J826**

| | | | |
|---|---|---|---|
| SPDO | GND | SPDI | GND |
| 1 | | | 4 |

to the MAIN unit J901

**J802**

| | | | | | | | | |
|---|---|---|---|---|---|---|---|---|
| TX+ | TX− | RX+ | NC | NC | RX− | NC | NC | GND |
| 1 | | | | | | | | 9 |

to the SCOPE unit J907

**J816**

| | | | | | | | | | | | | | | | | | | | | | |
|---|---|---|---|---|---|---|---|---|---|---|---|---|---|---|---|---|---|---|---|---|---|
| | 2 | P+15V | R8V | P+5V | GND | PSLA | C2A2 | GND | PCKA | GND | DRES | GND | | | | | | | | | 22 |
| | GND | P+15V | T8V | P+5V | GND | PSTA | C2A1 | GND | PDATA | GND | UNLKA | | | | | | | | | | |
| | 1 | | | | | | | | | | | | | | | | | | | | 21 |

to the RXPLL-A unit J2

**J806**

| | | | | | | | | | | | | | | | | | | | | | | | | | | |
|---|---|---|---|---|---|---|---|---|---|---|---|---|---|---|---|---|---|---|---|---|---|---|---|---|---|---|
| LVDD1 | LVDD2 | LVDD3 | LVDD4 | GND | GND | NC | NC | LOCKL | DE | VS | HS | GND | B5 | B4 | B3 | GND | B2 | B1 | B0 | GND | G5 | G4 | G3 | GND | G2 | G1 |
| G0 | GND | R5 | R4 | R3 | GND | R2 | R1 | R0 | GND | LCLK | GND | | | | | | | | | | | | | | | |
| 1 | | | | | | | | | | | | | | | | | | | | | | | | | | 40 |

to the DISPLAY board J202

• **BOTTOM VIEW (LOGIC UNIT)**

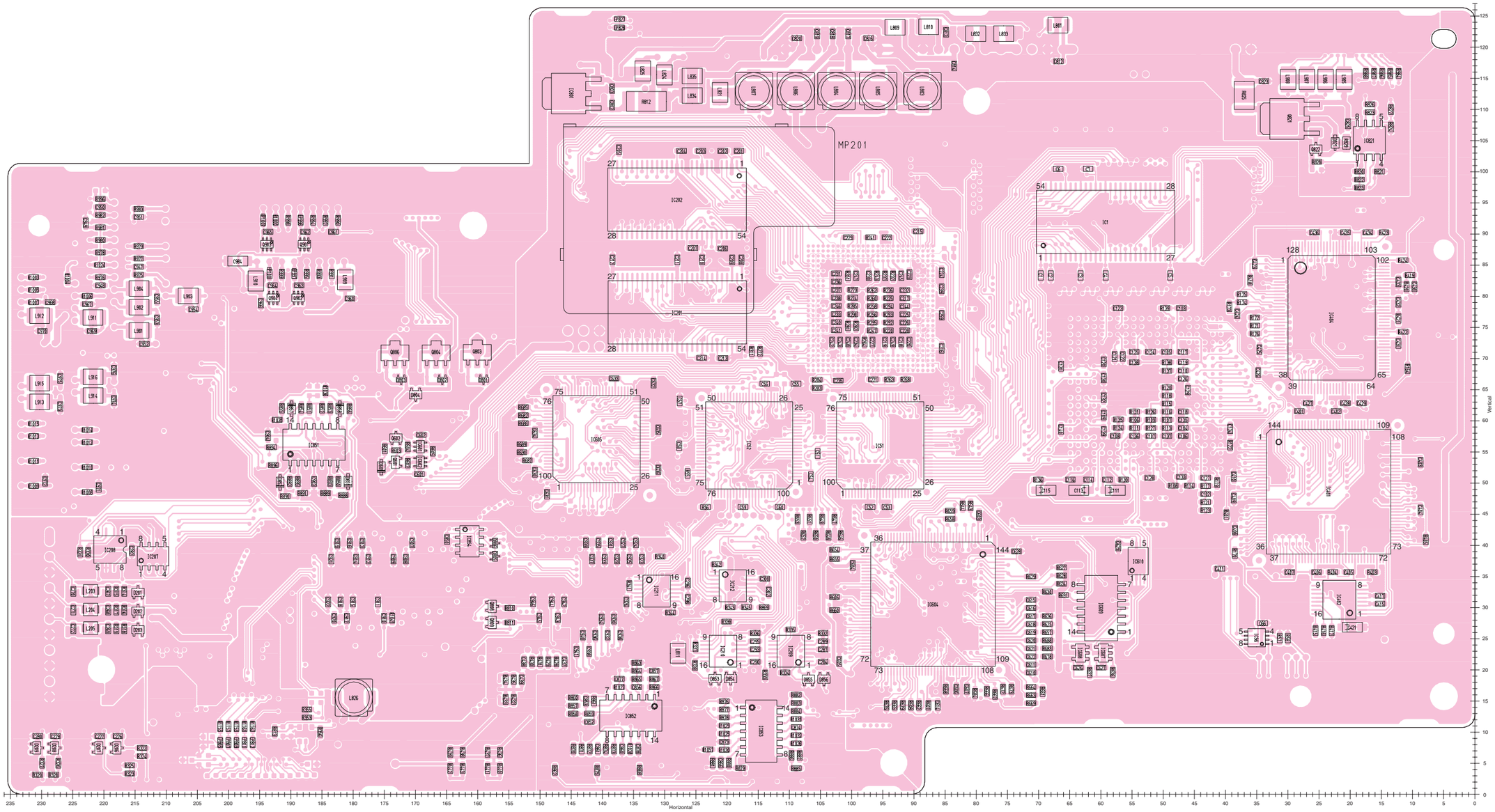

## 8-17 MEMORY BOARD

• TOP VIEW

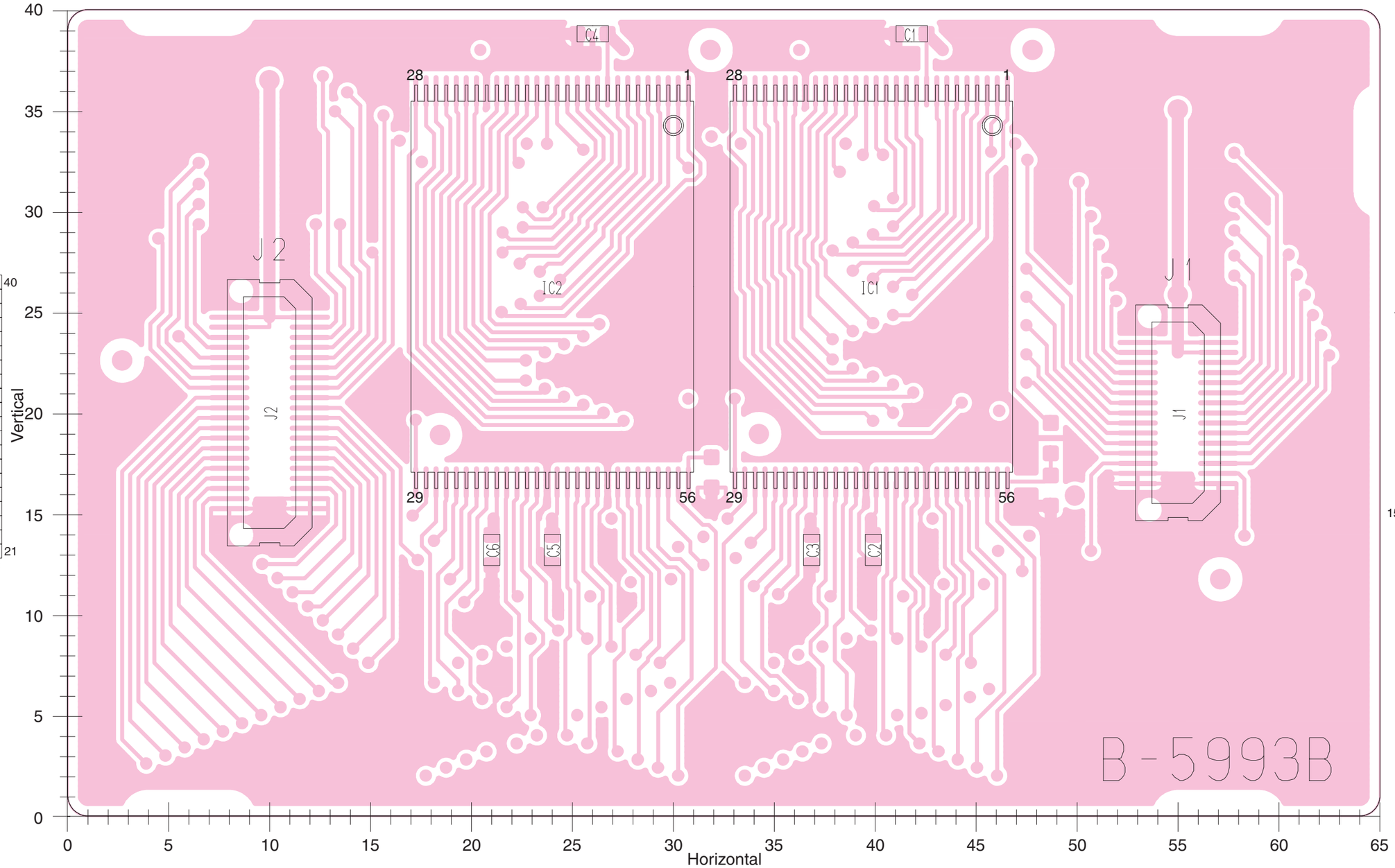


**J2**

| | | | |
|---|---|---|---|
| 1 | +3R3V | +3R3V | 40 |
| | CE01 | +3R3V | |
| | CE00 | CE11 | |
| | CE02 | CE10 | |
| | CE21 | CE12 | |
| | CE20 | CE31 | |
| | CE22 | CE30 | |
| | VPEN | CE32 | |
| | RP# | WE# | |
| | OE# | STS | |
| | D15 | D7 | |
| | D14 | D6 | |
| | D13 | D5 | |
| | D12 | D4 | |
| | D11 | D3 | |
| | D10 | D2 | |
| | D9 | D1 | |
| | D8 | D0 | |
| | GND | BYTE# | |
| 20 | GND | GND | 21 |

to the LOGIC unit J2

**J1**

| | | | |
|---|---|---|---|
| 1 | +3R3V | +3R3V | 30 |
| | +3R3V | A22 | |
| | A21 | A20 | |
| | A19 | A18 | |
| | A17 | A16 | |
| | A15 | A14 | |
| | A13 | A12 | |
| | A11 | A10 | |
| | A9 | A8 | |
| | A7 | A6 | |
| | A5 | A4 | |
| | A3 | A2 | |
| | A1 | A0 | |
| | A23 | GND | |
| 15 | GND | GND | 16 |

to the LOGIC unit J1

• **BOTTOM VIEW (MEMORY BOARD)**

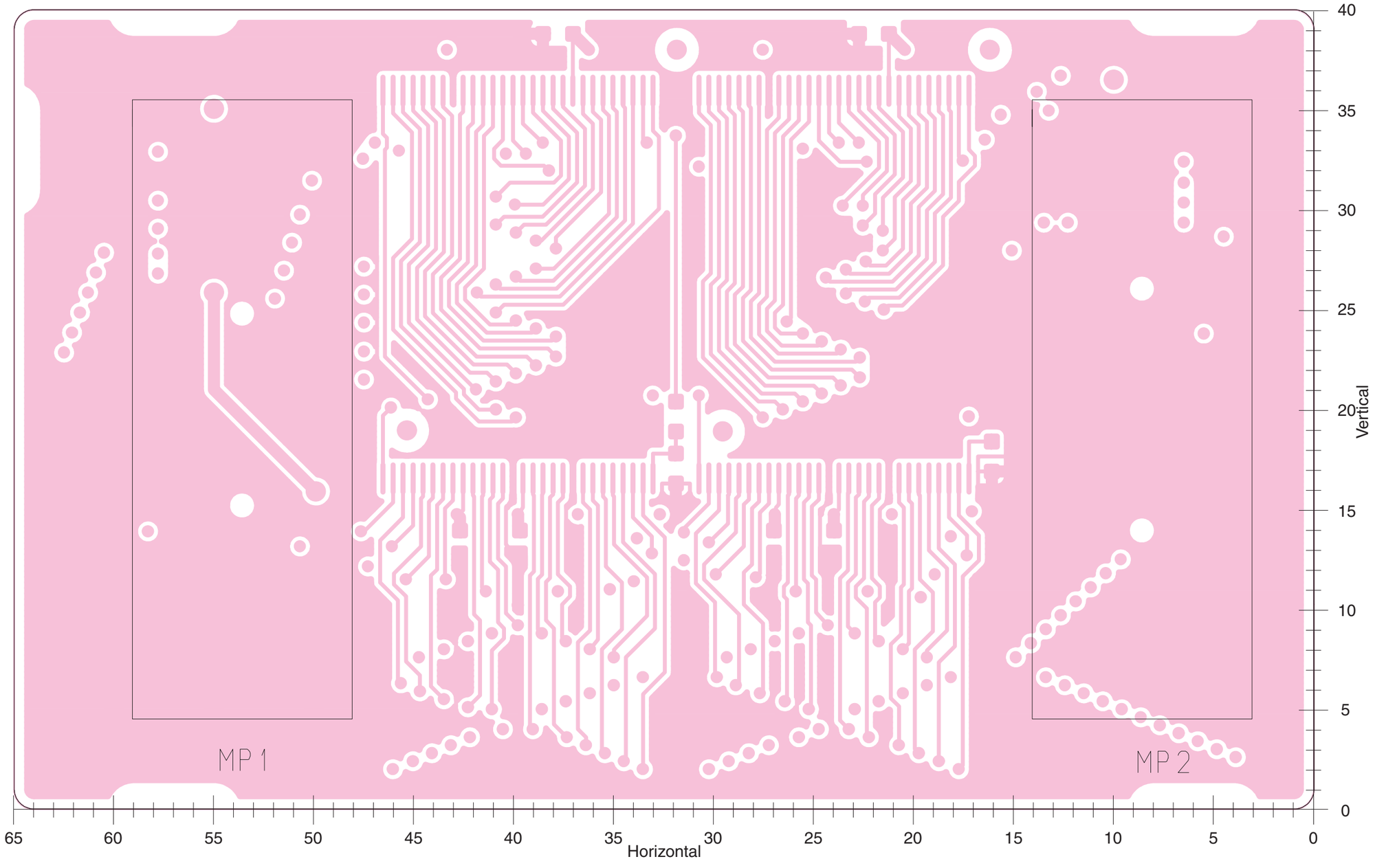

# 8-18 MAIN UNIT

## • TOP VIEW

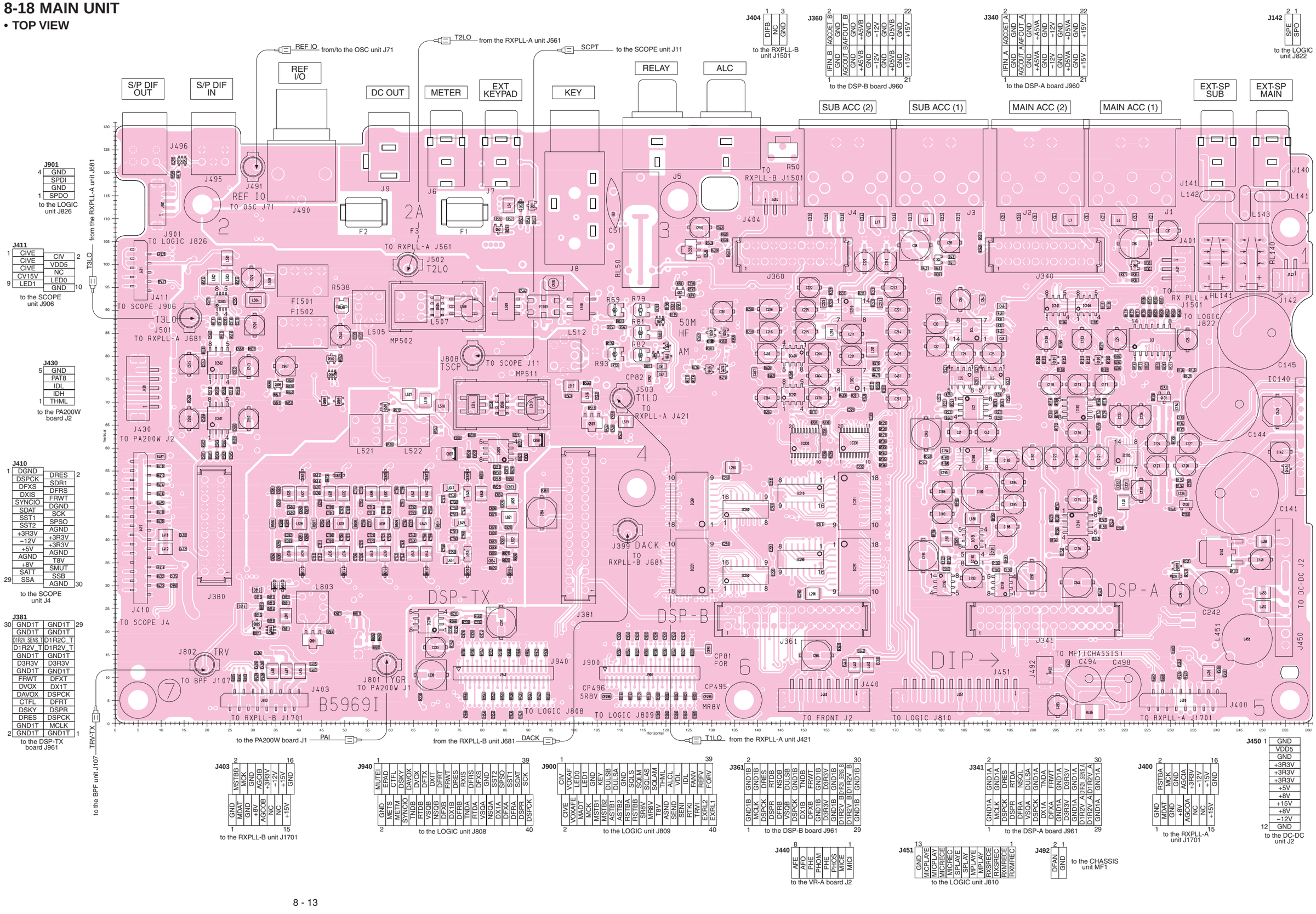

• **BOTTOM VIEW (MAIN UNIT)**

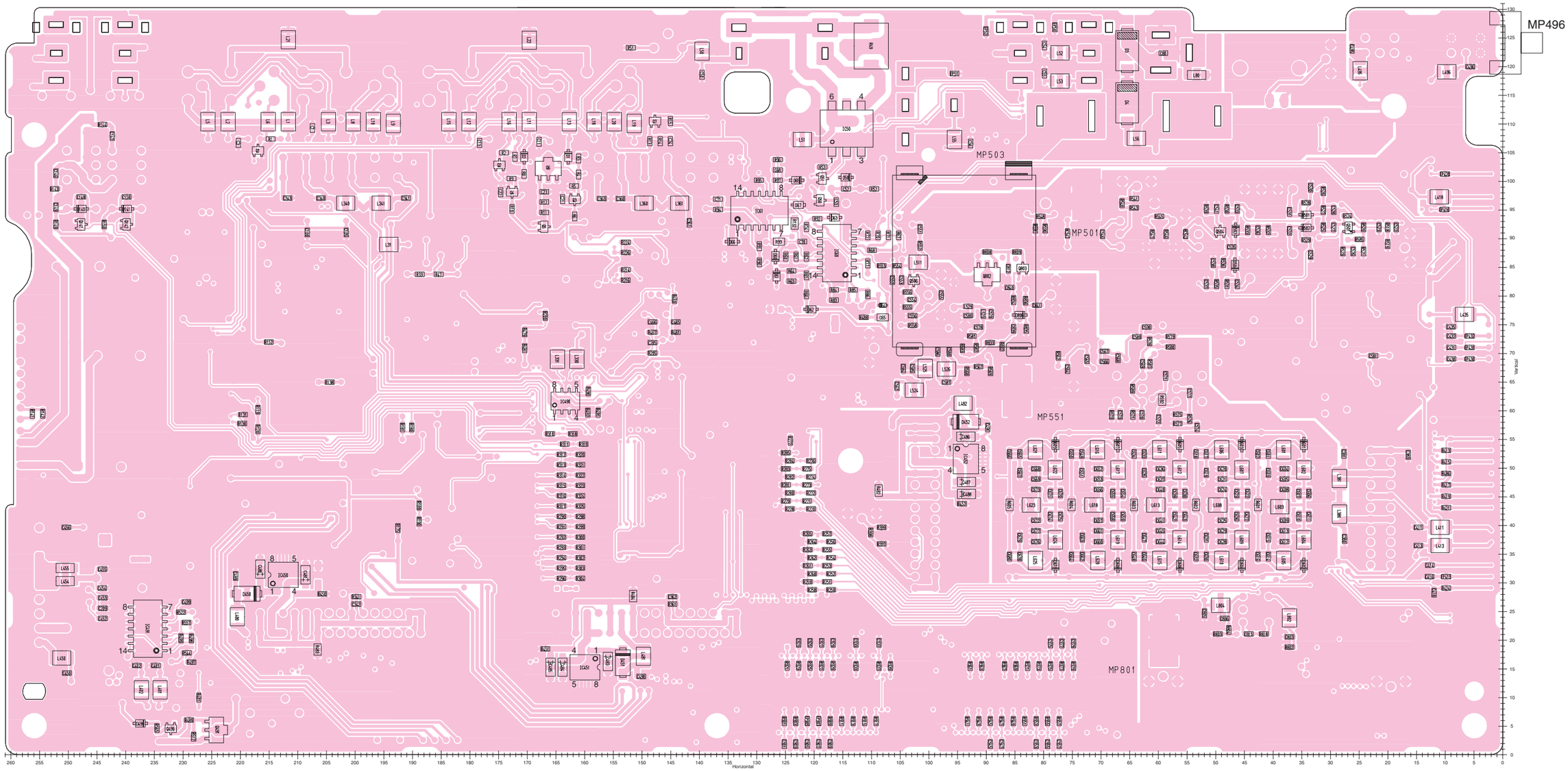

## 8-19 DSP-A/DSP-B BOARDS

• TOP VIEW

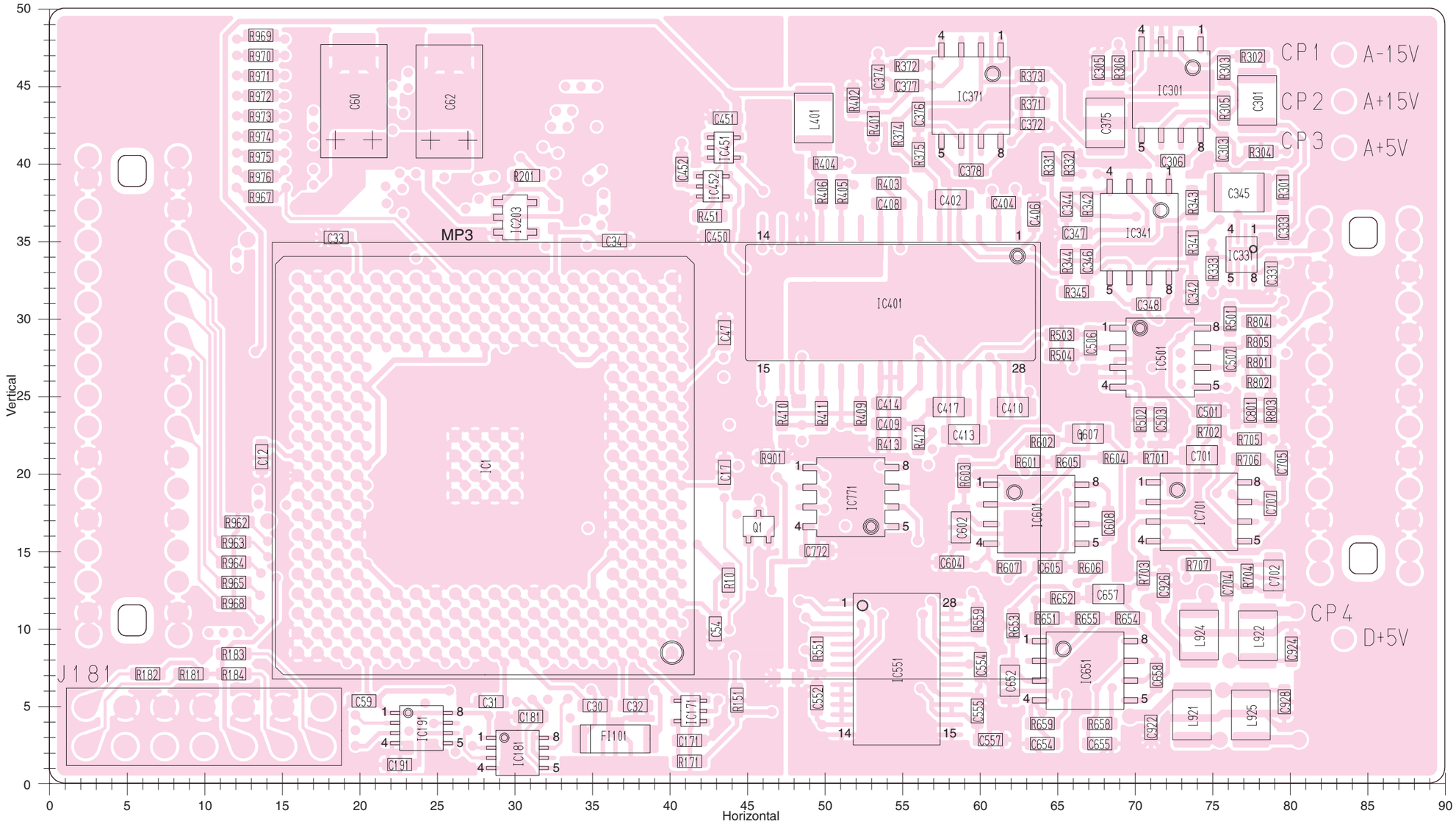

• **BOTTOM VIEW (DSP-A/DSP-B BOARDS)**

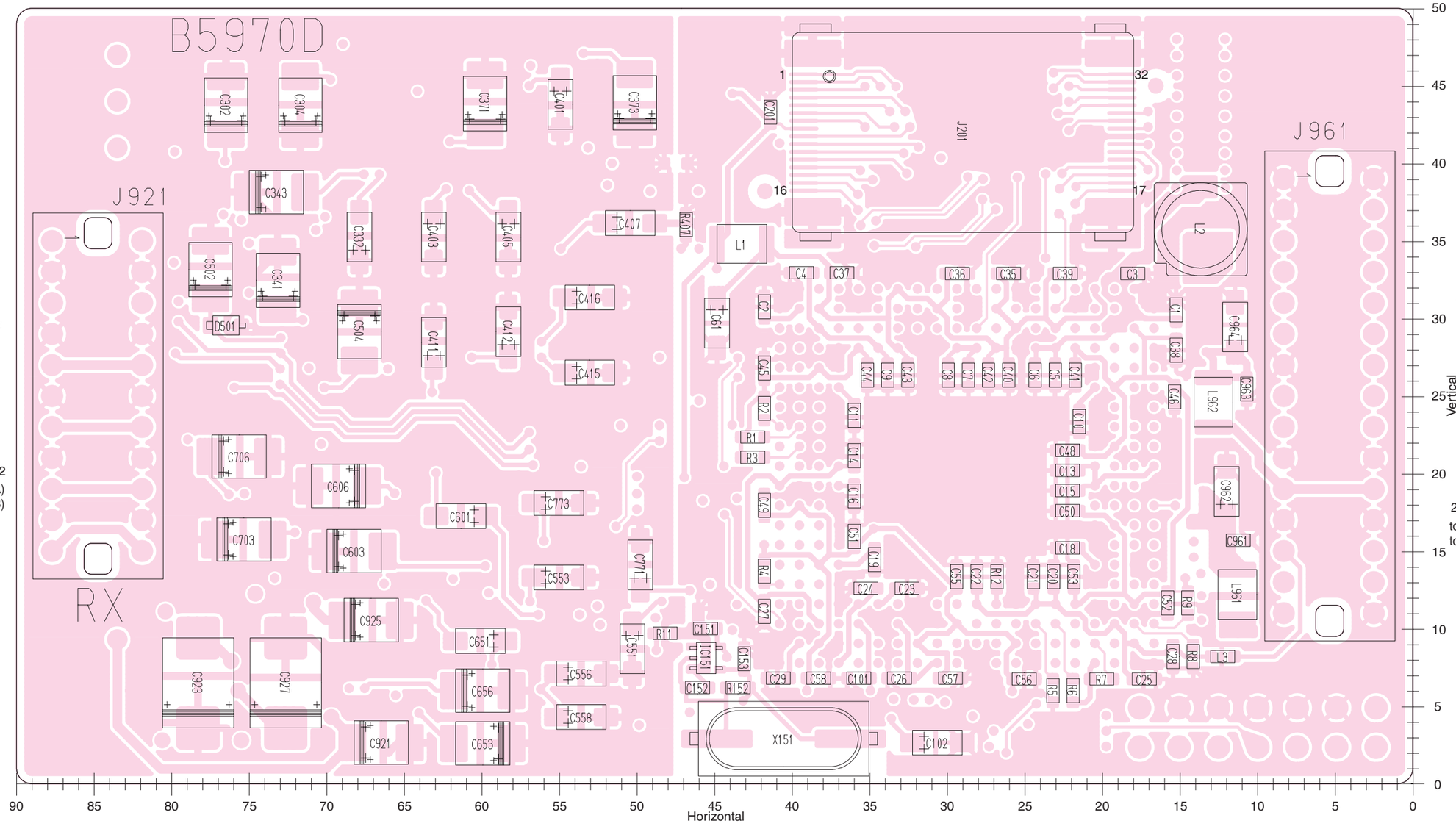


**J921**

| | | | |
|---|---|---|---|
| 1 | AGCDET_A/B | IFIN_A/B | 2 |
| | GND | GND | |
| | AFOUT_A/B | AGCOUT_A/B | |
| | GND | GND | |
| | +A5VA/B | +A5VA/B | |
| | GND | GND | |
| | −12V | −12V | |
| | GND | GND | |
| | +D5VA/B | +D5VA/B | |
| | GND | GND | |
| 11 | +15V | +15V | 22 |

to the MAIN unit J340 (DSP-A)
to the MAIN unit J360 (DSP-B)

**J961**

| | | | |
|---|---|---|---|
| 1 | GND1A/B | GND1A/B | 2 |
| | GND1A/B | MCLK | |
| | DRES | DSPCK | |
| | RTDA/B | DSPR | |
| | NSQL/B | DFRA/B | |
| | DULSA/B | VSQA/B | |
| | GND1A/B | DSPCK | |
| | TNDA/B | DX1A/B | |
| | FRWT | DFXA/B | |
| | GND1A/B | GND1A/B | |
| | D3R3V | D3R3V | |
| | GND1A/B | GND1A/B | |
| | D1R2V_SENS_A/B | D1R2V_A/B | |
| | D1R2V_A/B | D1R2V_A/B | |
| 29 | GND1A/B | GND1A/B | 30 |

to the MAIN unit J341 (DSP-A)
to the MAIN unit J361 (DSP-B)

## 8-20 DSP-TX BOARD

• TOP VIEW

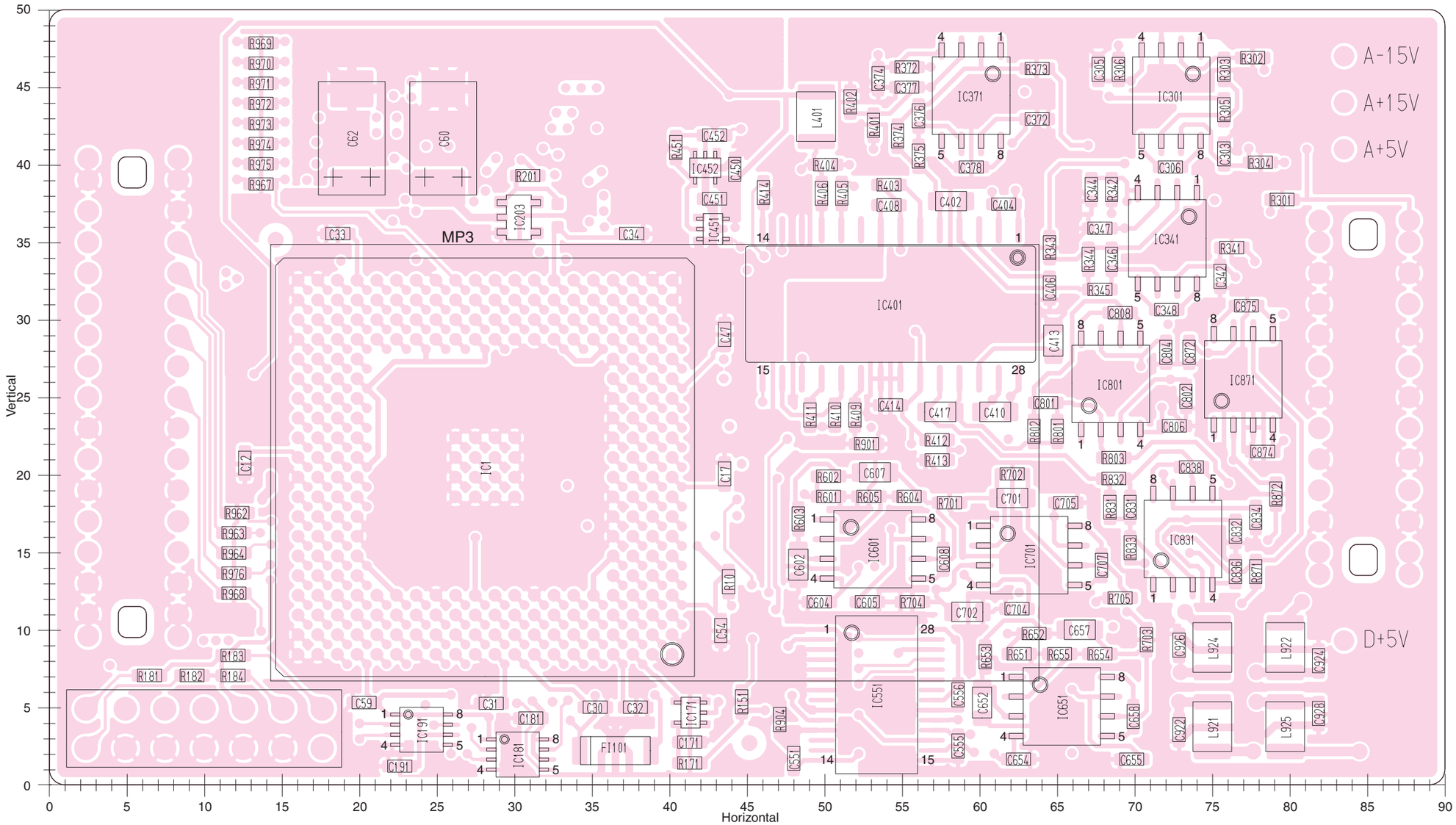

• **BOTTOM VIEW (DSP-TX BOARD)**

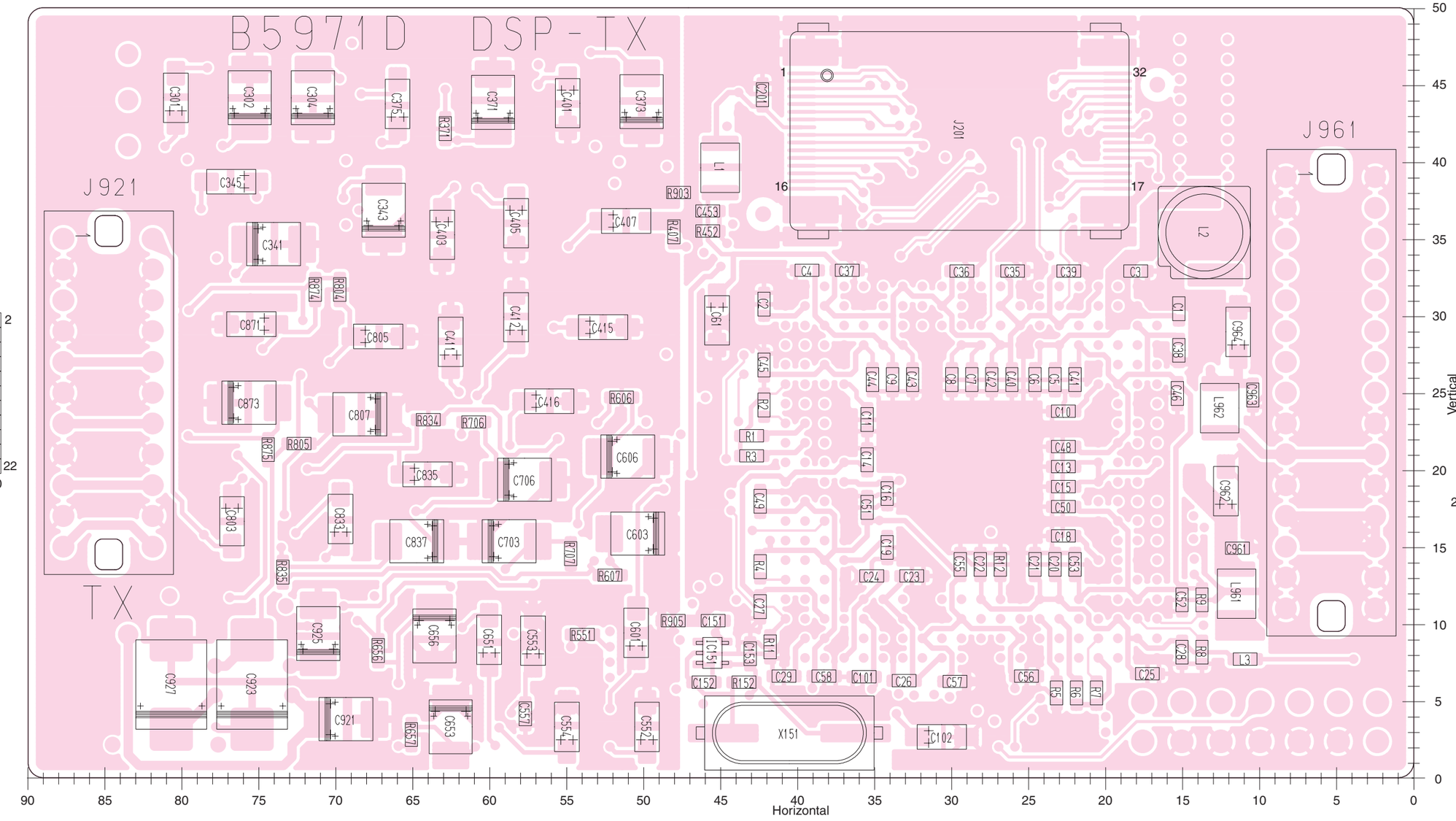


**J921**

| | | | |
|---|---|---|---|
| 1 | AFIN | ANVOX | 2 |
| | GND | GND | |
| | TX36K | GND | |
| | GND | GND | |
| | +A5VT | +A5VT | |
| | GND | GND | |
| | −12V | −12V | |
| | GND | GND | |
| | +D5VT | +D5VT | |
| | GND | GND | |
| 11 | +15V | +15V | 22 |

to the MAIN unit J380

**J961**

| | | | |
|---|---|---|---|
| 1 | GND1T | GND1T | 2 |
| | GND1T | MCLK | |
| | DRES | DSPCK | |
| | DSKY | DSPR | |
| | CTFL | DFRT | |
| | DAVOX | DSPCK | |
| | CVOX | DX1T | |
| | FRWT | DFXT | |
| | GND1T | GND1T | |
| | D3R3V | D3R3V | |
| | GND1T | GND1T | |
| | D1R2V_T | D1R2V_T | |
| | D1R2V_SENS_T | D1R2V_T | |
| | GND1T | GND1T | |
| 29 | GND1T | GND1T | 30 |

to the MAIN unit J381

# 8-21 SCOPE UNIT

• **TOP VIEW**

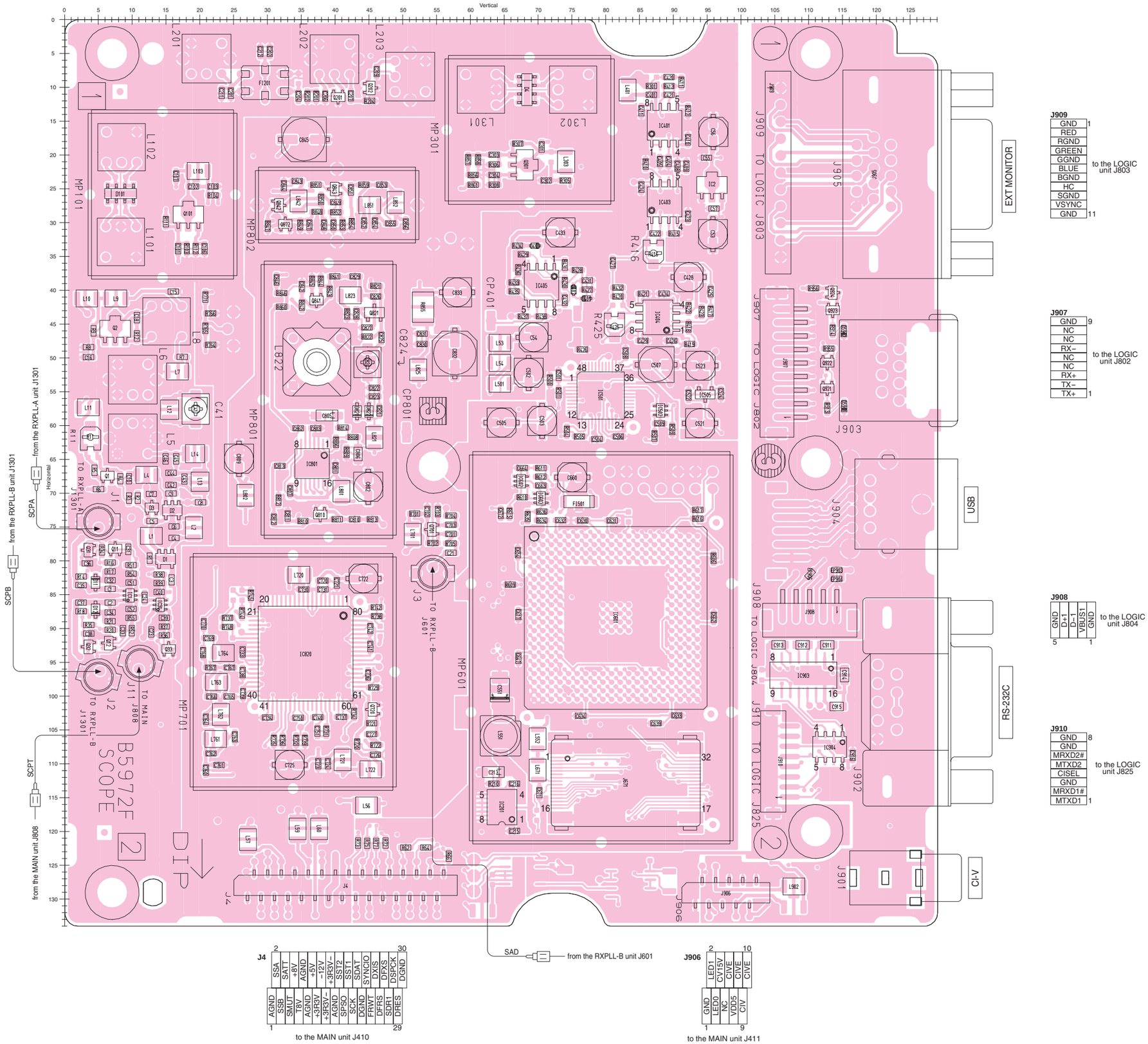


**J909**

| | |
|---|---|
| GND | 1 |
| RED | |
| RGND | |
| GREEN | |
| GGND | |
| BLUE | to the LOGIC unit J803 |
| BGND | |
| HC | |
| SGND | |
| VSYNC | |
| GND | 11 |

**J907**

| | |
|---|---|
| GND | 9 |
| NC | |
| NC | |
| RX− | |
| NC | to the LOGIC unit J802 |
| NC | |
| RX+ | |
| TX− | |
| TX+ | 1 |

**J908**

| | | | | | |
|---|---|---|---|---|---|
| GND | D+1 | D−1 | VBUS1 | GND | to the LOGIC unit J804 |
| 5 | | | | 1 | |

**J910**

| | |
|---|---|
| GND | 8 |
| GND | |
| MRXD2# | |
| MTXD2 | to the LOGIC unit J825 |
| CISEL | |
| GND | |
| MRXD1# | |
| MTXD1 | 1 |

**J4** (2 … 30)

| | | | | | | | | | | | | | | |
|---|---|---|---|---|---|---|---|---|---|---|---|---|---|---|
| SSA | SATT | +8V | AGND | +5V | −12V | +3R3V− | SST2 | SST1 | SDAT | SYNCIO | DXIS | DFXS | DSPCK | DGND |
| AGND | SSB | SMUT | T8V | AGND | +3R3V | +3R3V− | AGND | SPSO | SCK | DGND | FRWT | DFRS | SDR1 | DRES |

(1 … 29)

to the MAIN unit J410

SAD — from the RXPLL-B unit J601

**J906** (2 … 10)

| | | | | |
|---|---|---|---|---|
| LED1 | CVI15V | CIVE | CIVE | CIVE |
| GND | LED0 | NC | VDD5 | CIV |

(1 … 9)

to the MAIN unit J411

• **BOTTOM VIEW (SCOPE UNIT)**

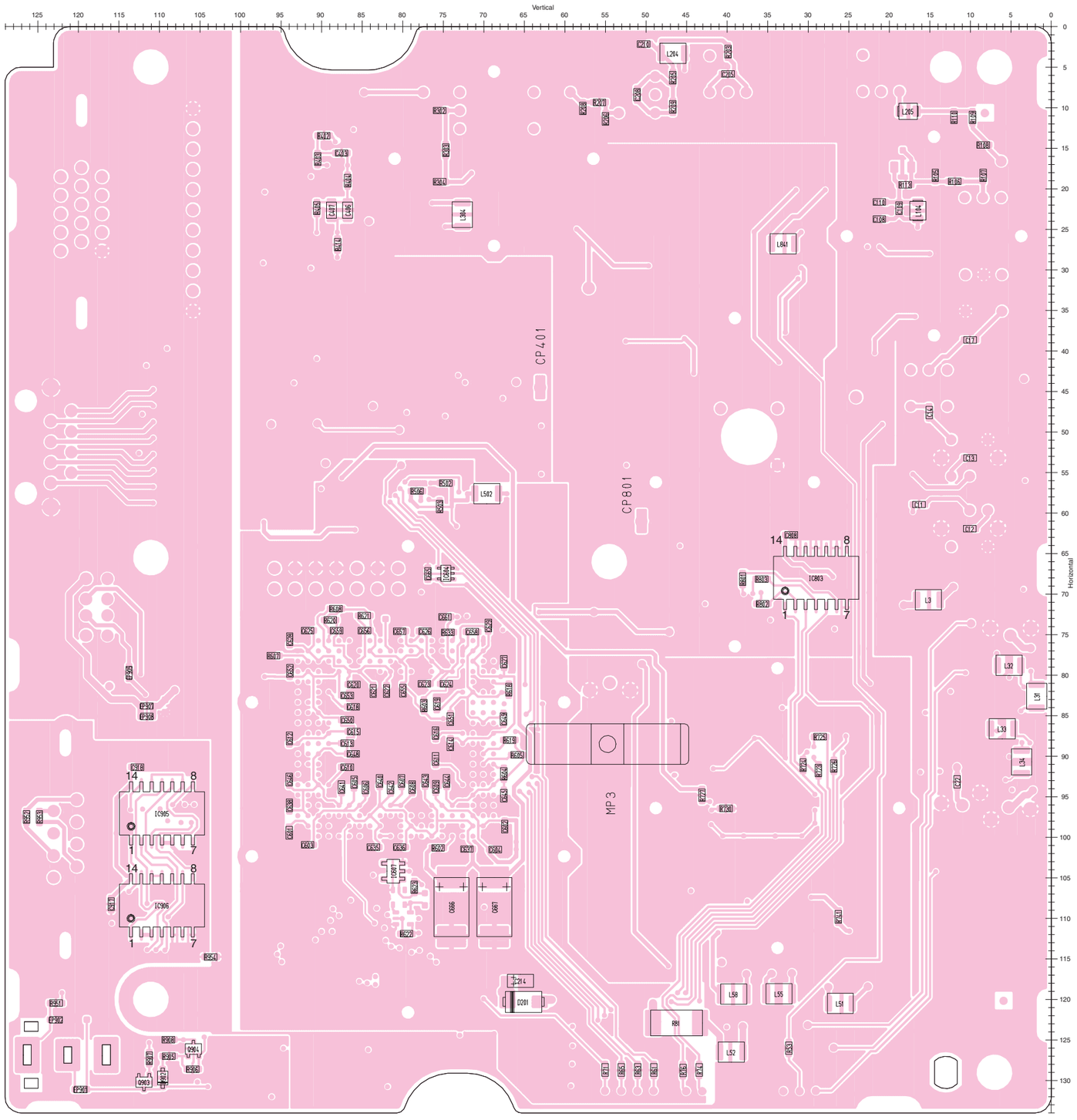

# 8-22 RXPLL-A UNIT

## • TOP VIEW

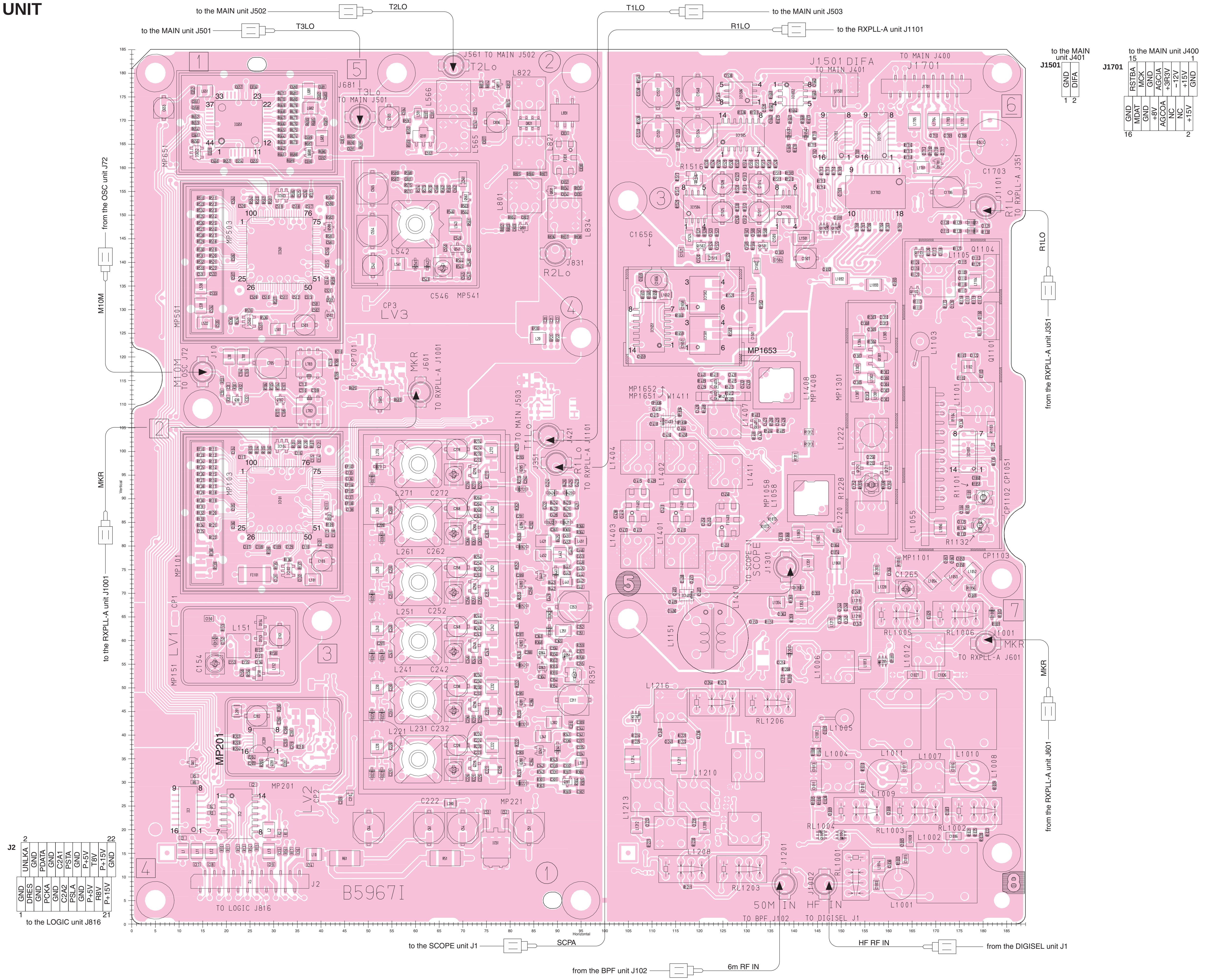

• **BOTTOM VIEW (RXPLL-A UNIT)**

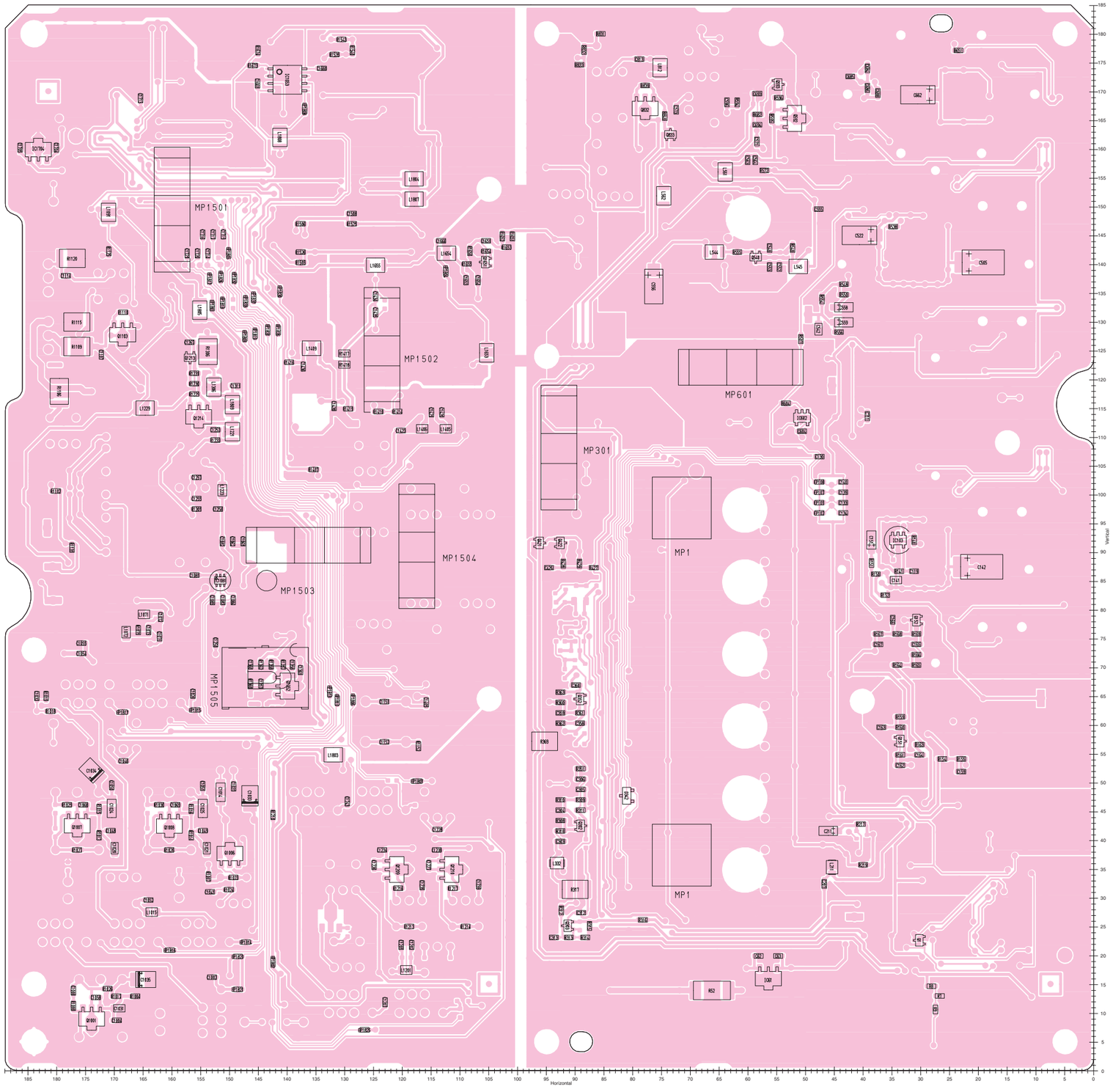

# 8-23 RXPLL-B UNIT

## • TOP VIEW

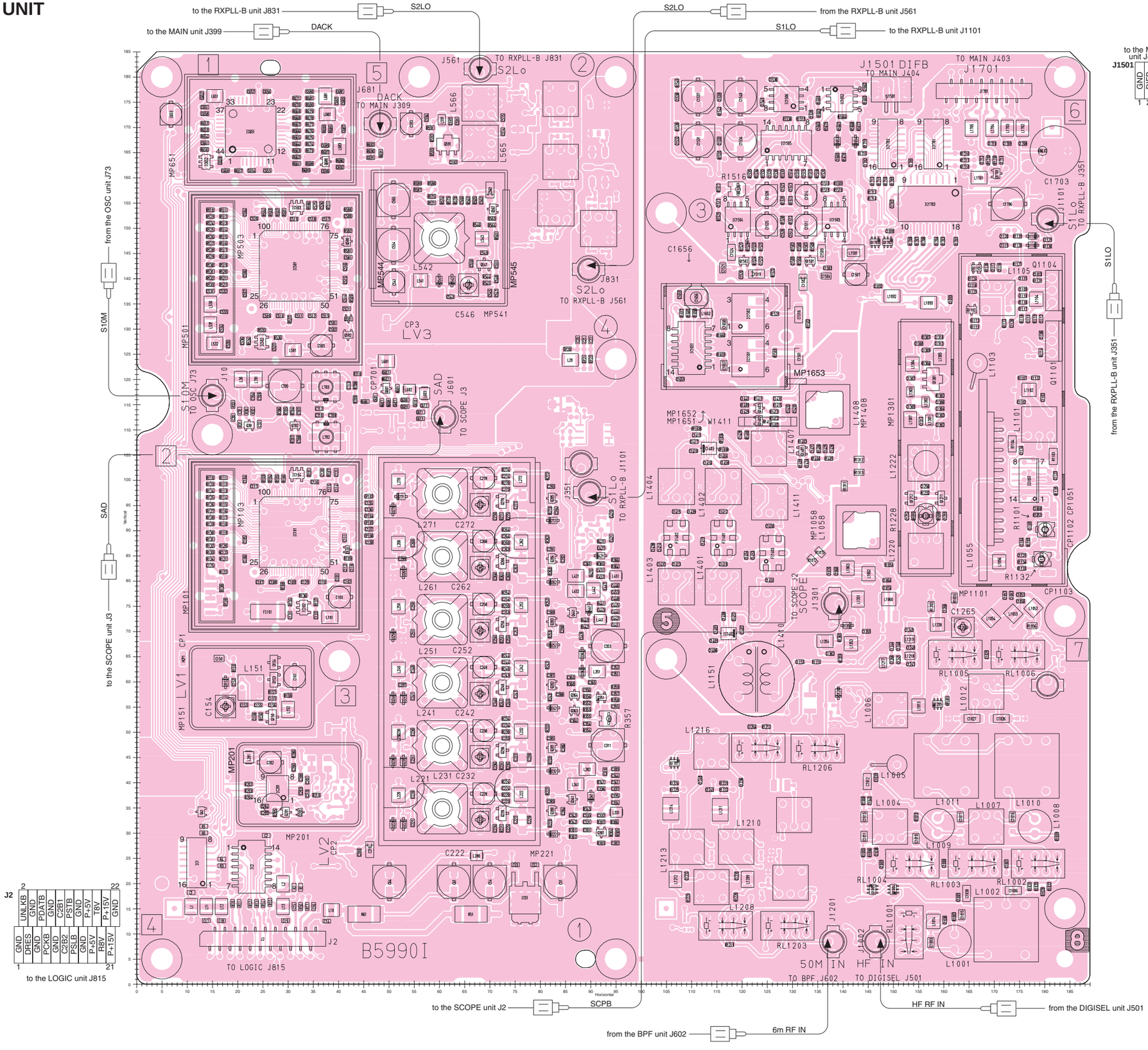

• **BOTTOM VIEW (RXPLL-B UNIT)**

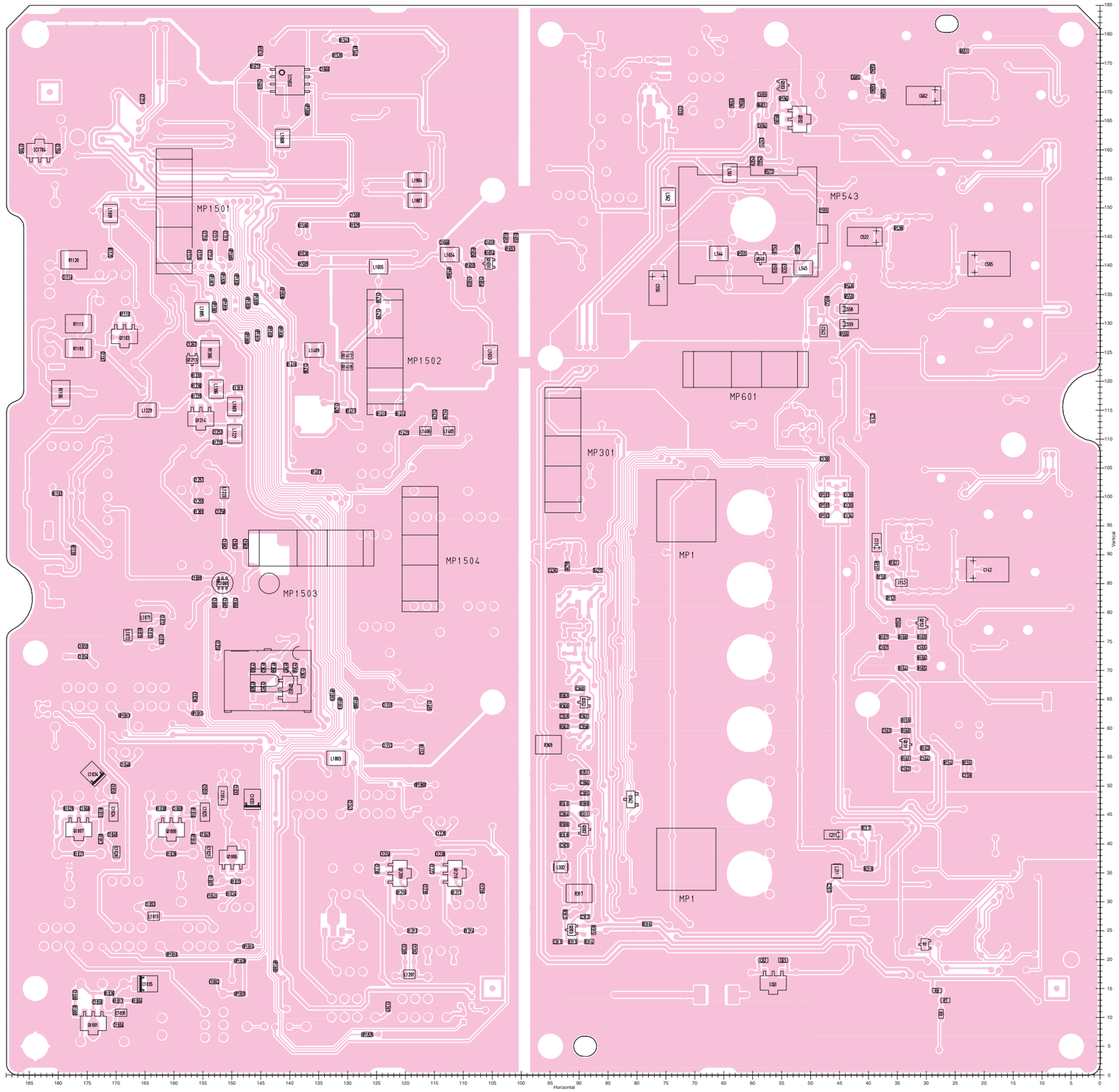

## 8-24 DIGISEL UNIT

• **TOP VIEW**

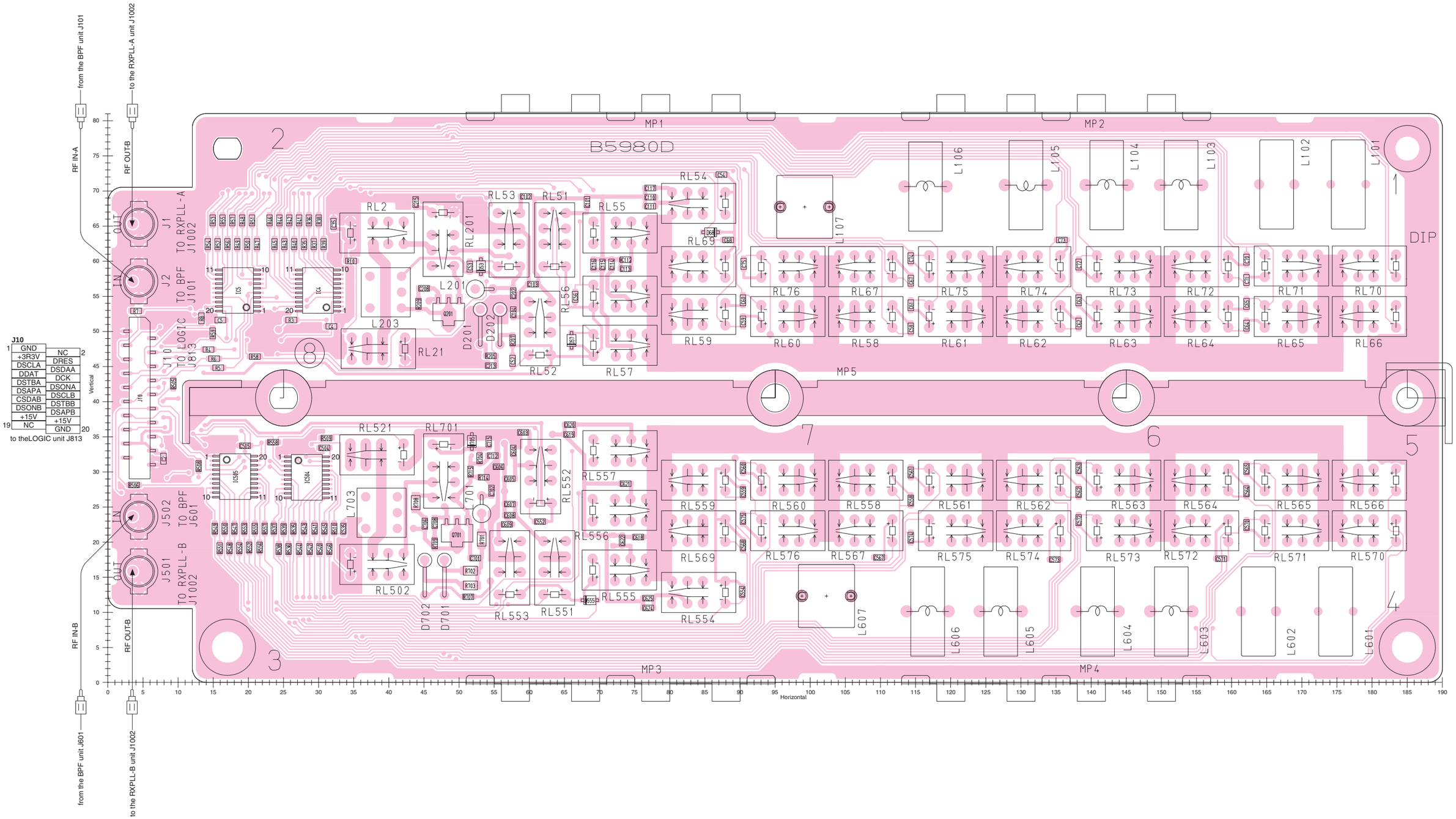

• **BOTTOM VIEW (DIGISEL UNIT)**

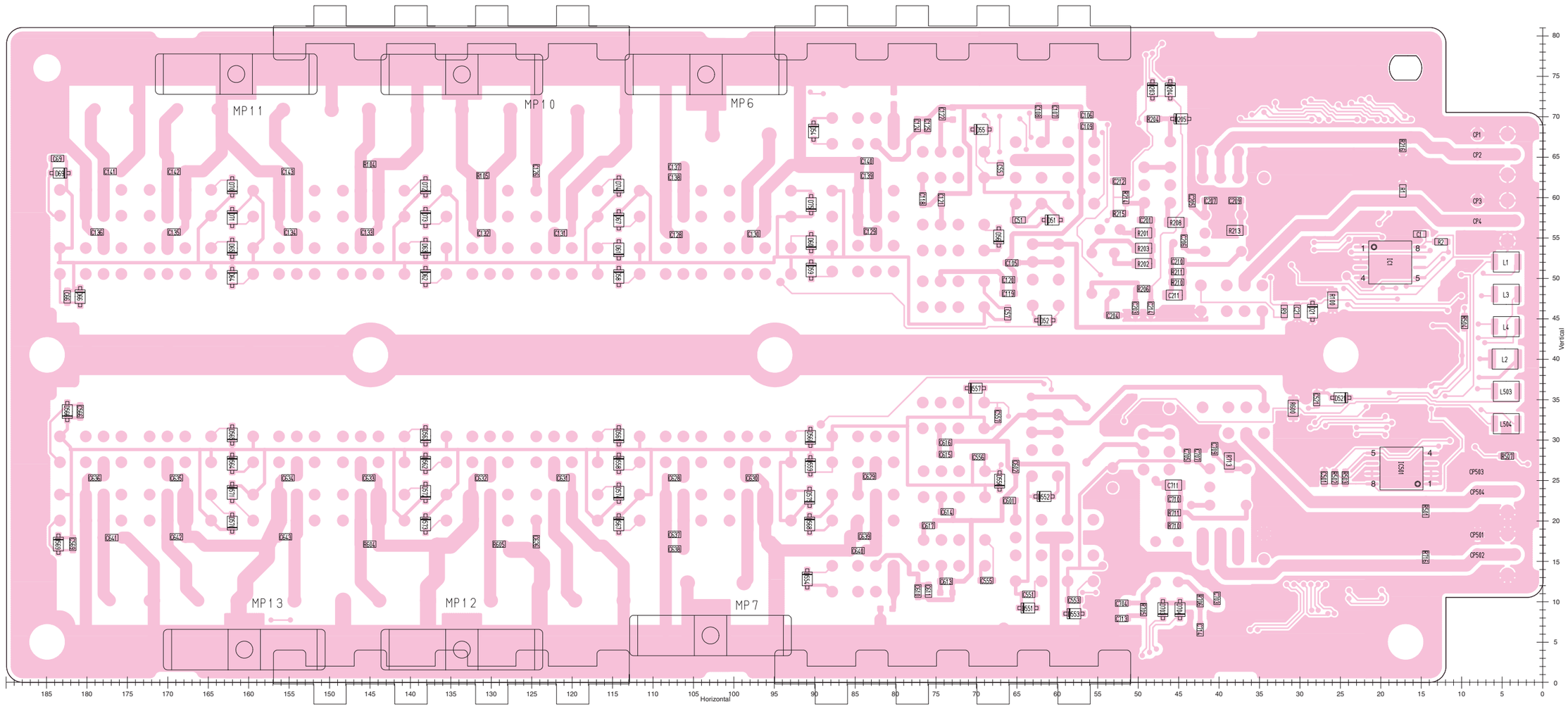

## 8-25 OSC UNIT

• TOP VIEW

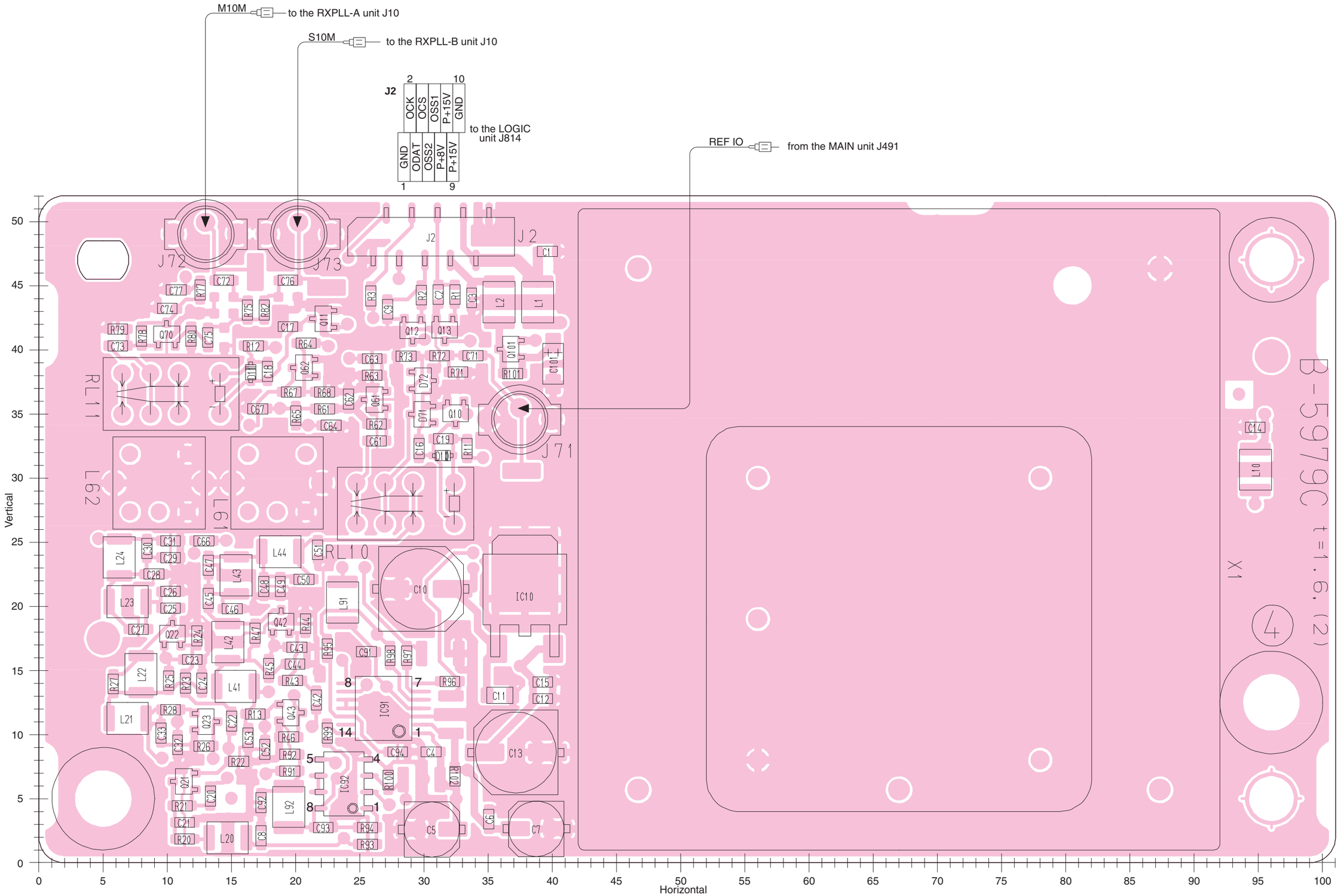

• **BOTTOM VIEW (OSC UNIT)**

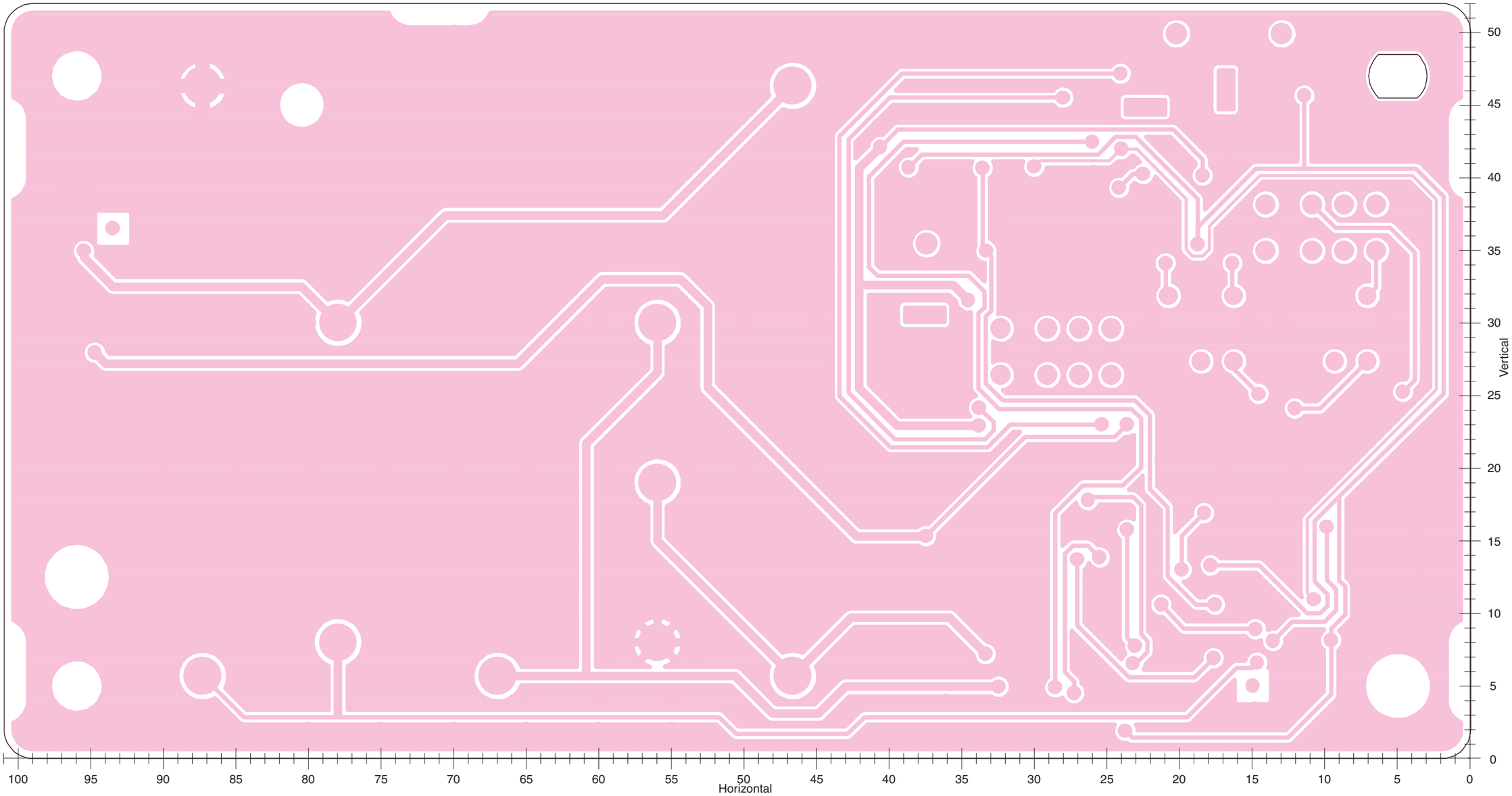

## 8-26 ANT-SW UNIT

• TOP VIEW

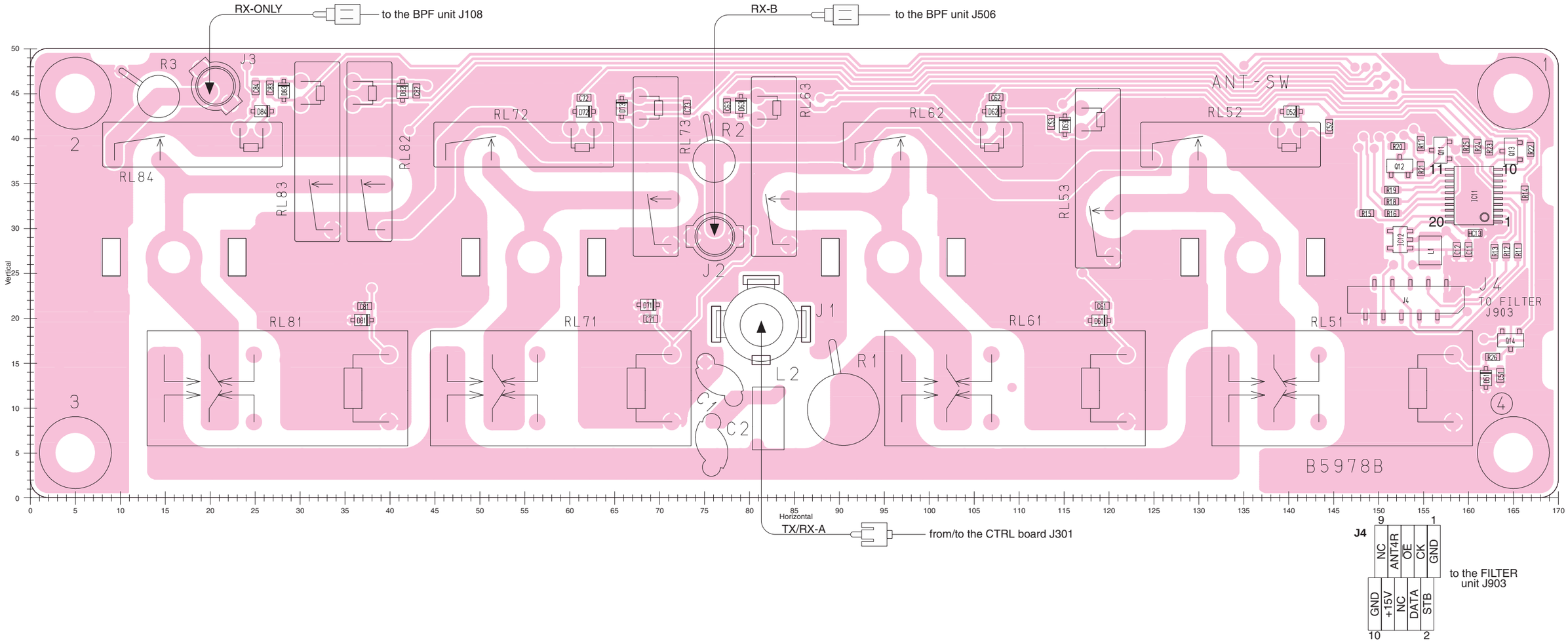

• **BOTTOM VIEW (ANT-SW UNIT)**

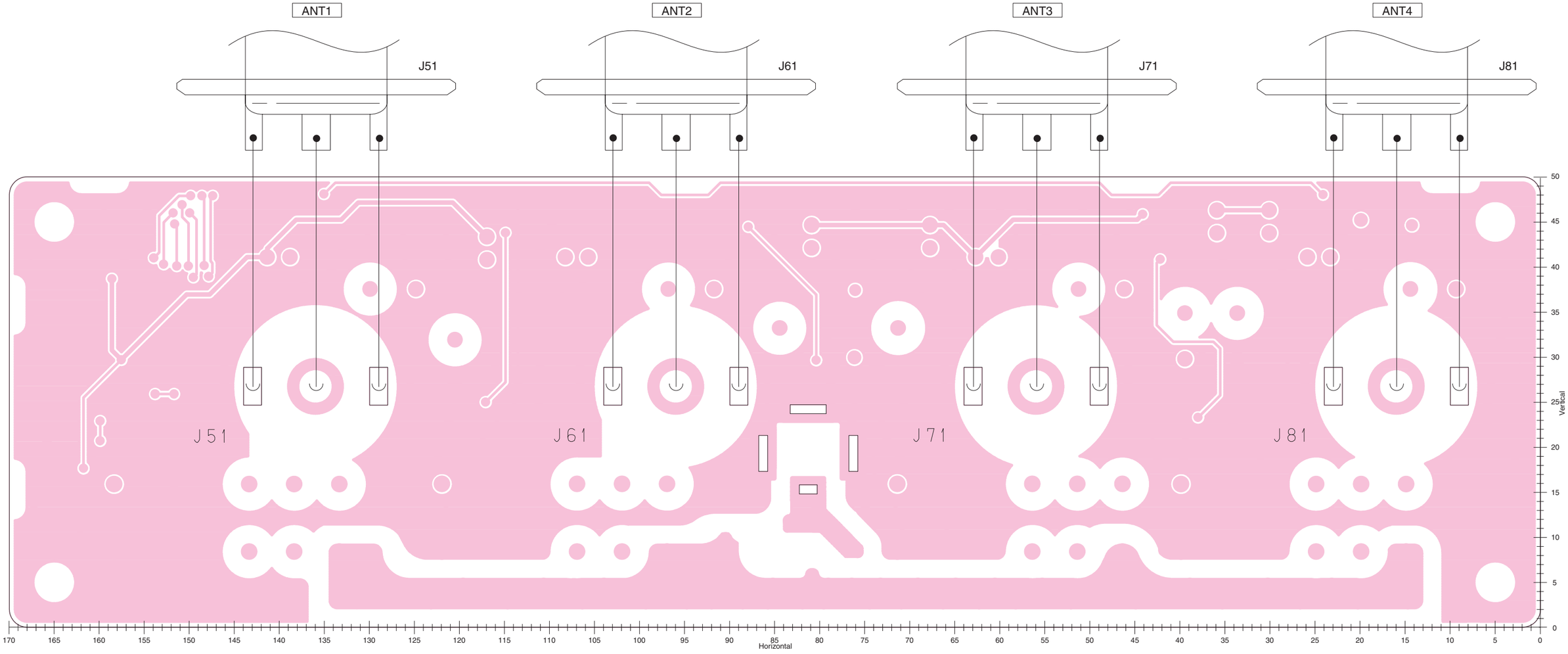

# 8-27 FILTER UNIT

• TOP VIEW

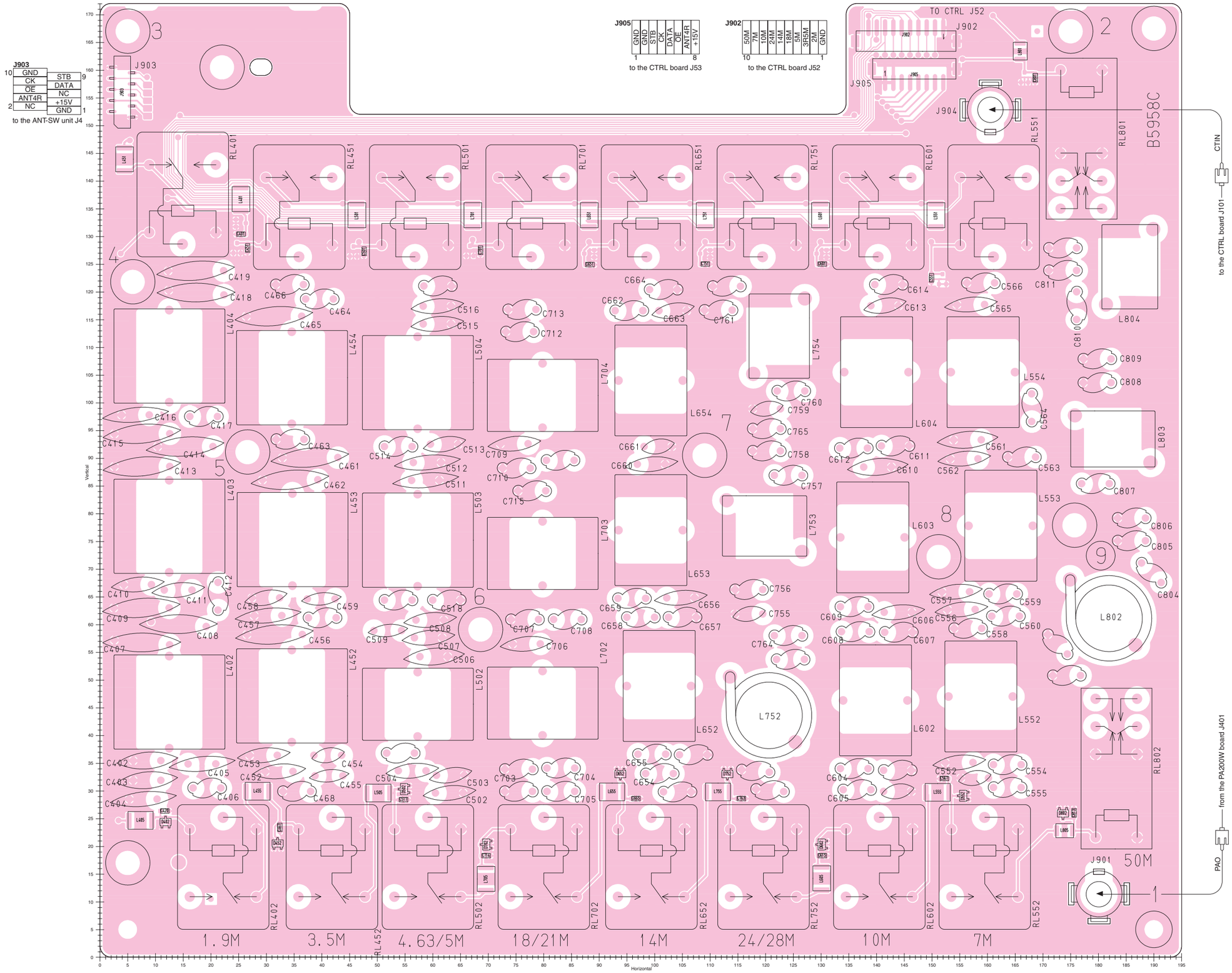

• **BOTTOM VIEW (FILTER UNIT)**

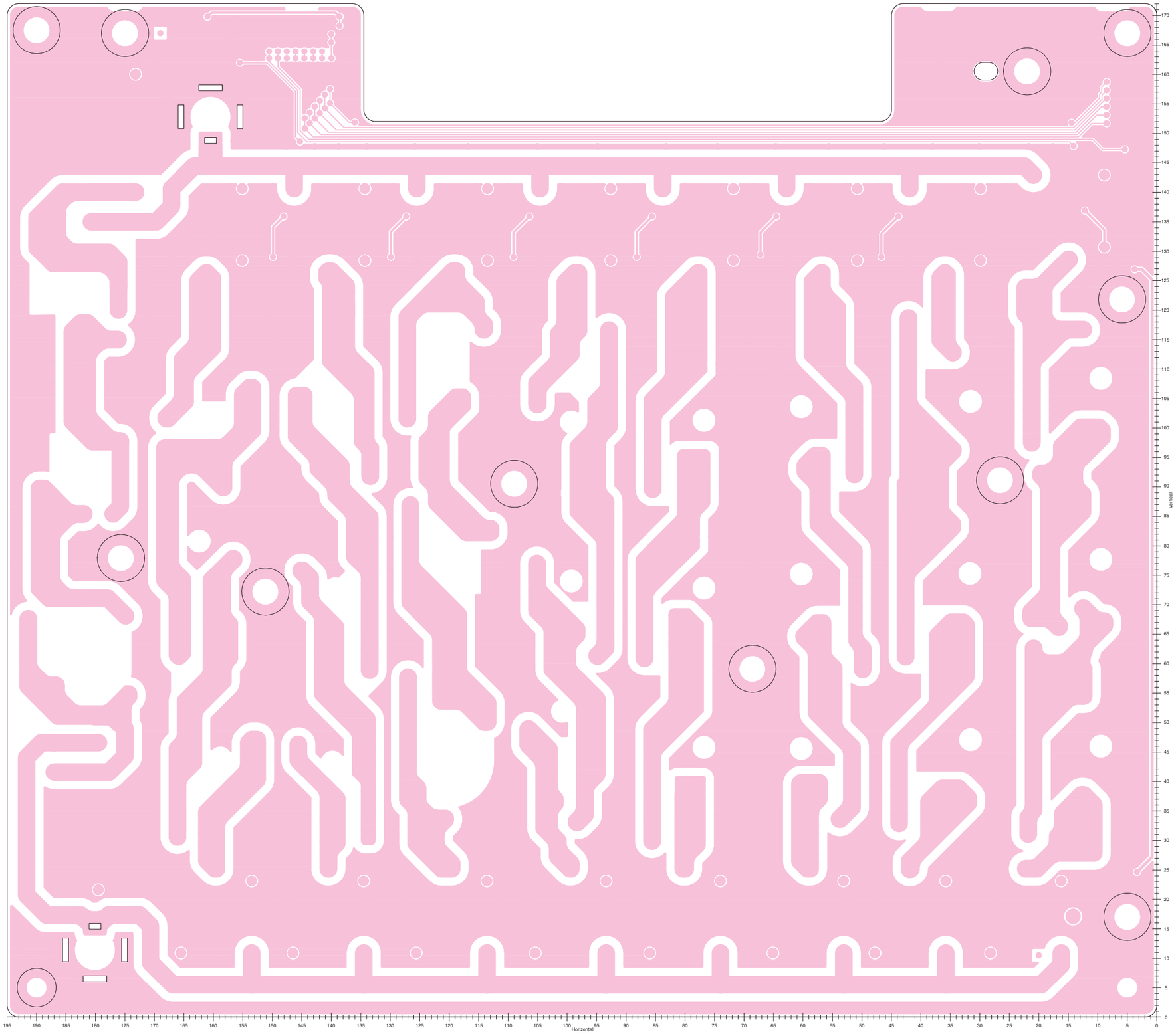

# 8-28 NETWORK BOARD

• TOP VIEW

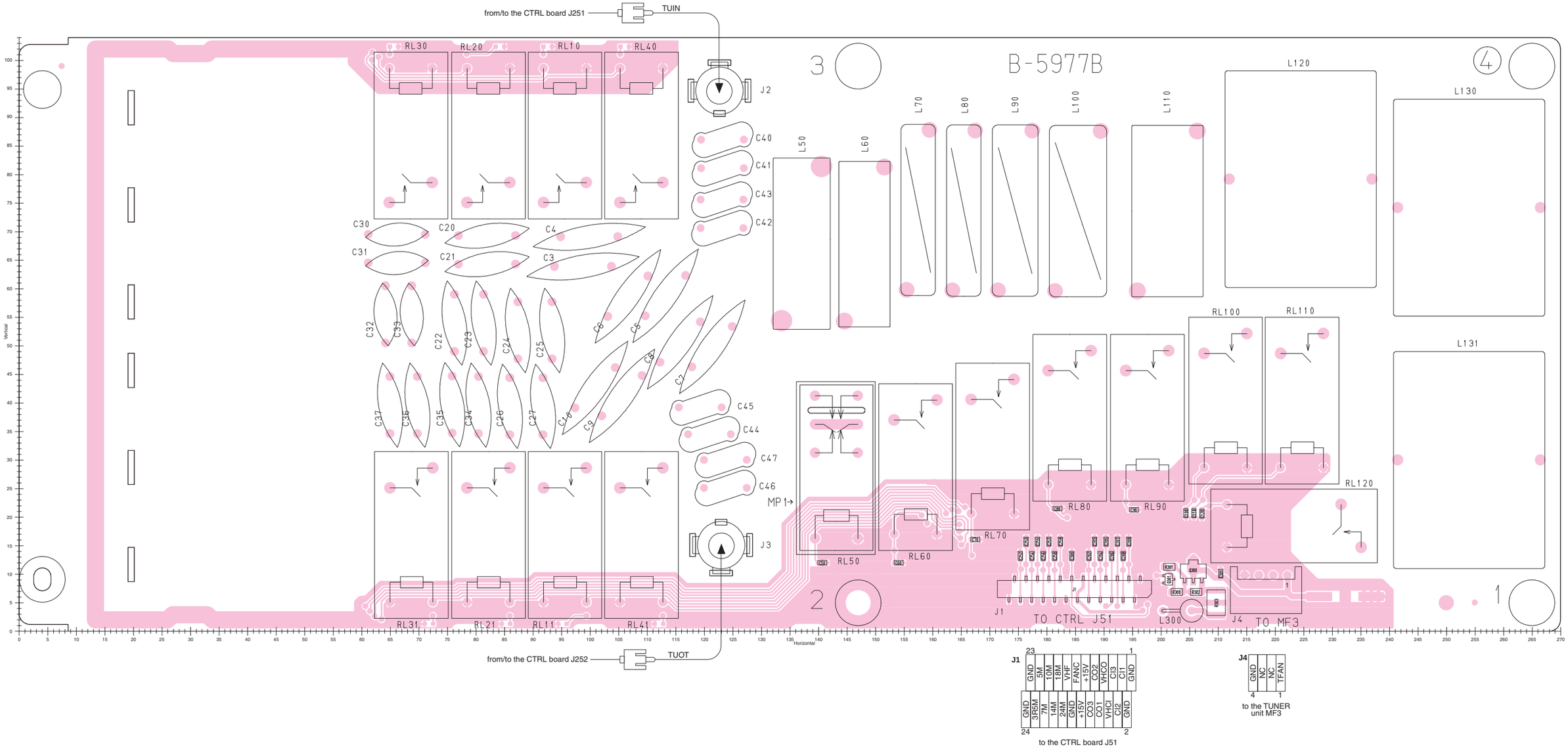

• **BOTTOM VIEW (NETWORK BOARD)**

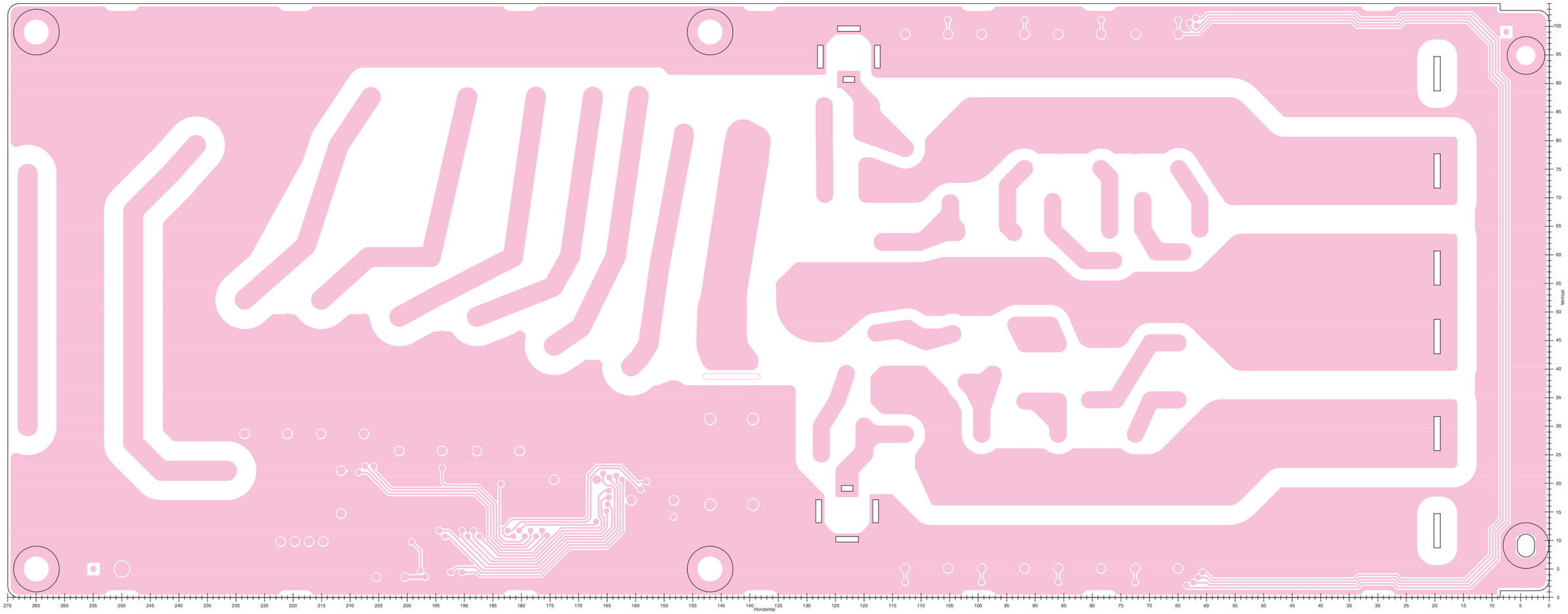

# 8-29 CTRL BOARD

• **TOP VIEW**

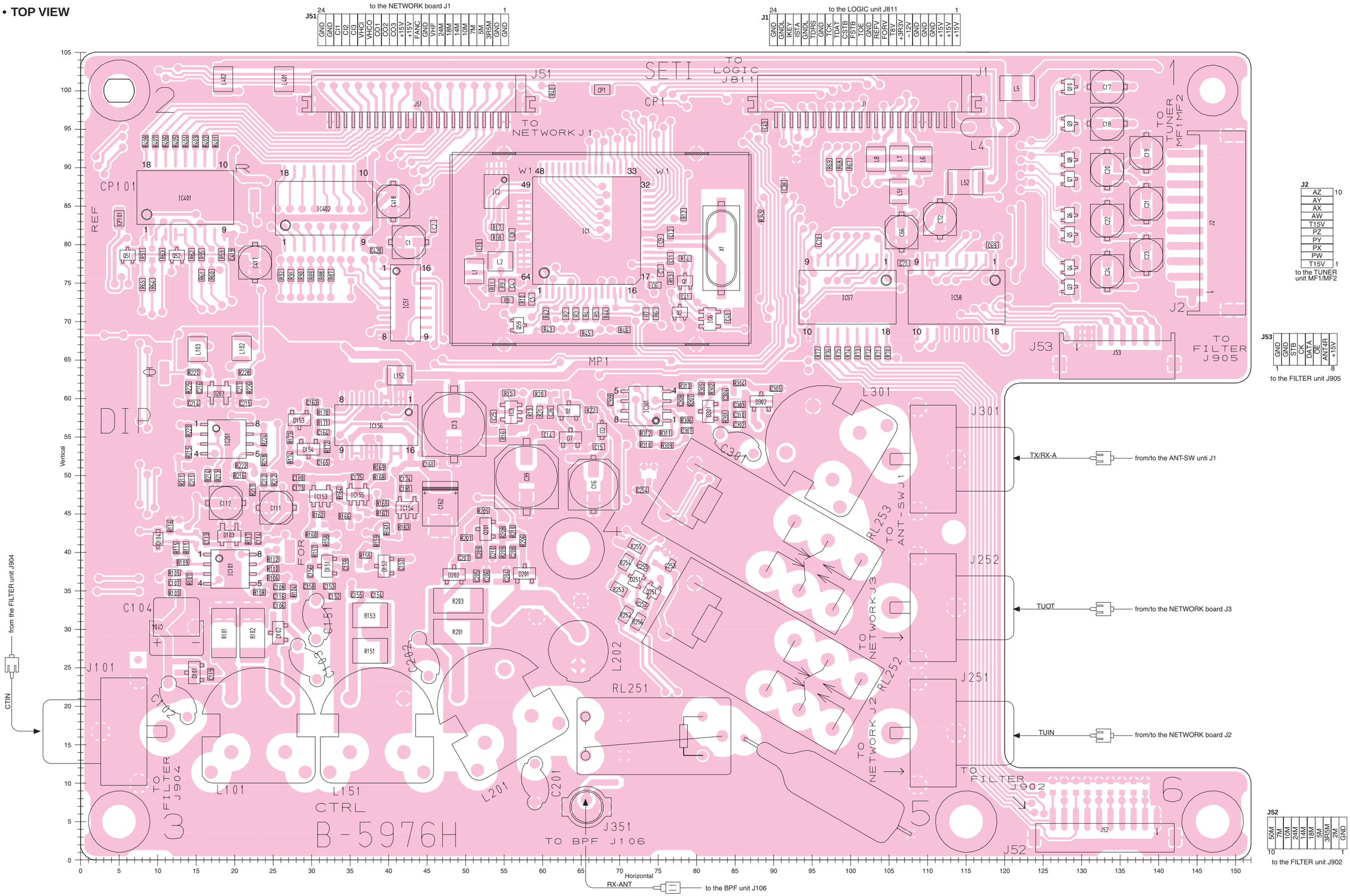

• **BOTTOM VIEW (CTRL BOARD)**

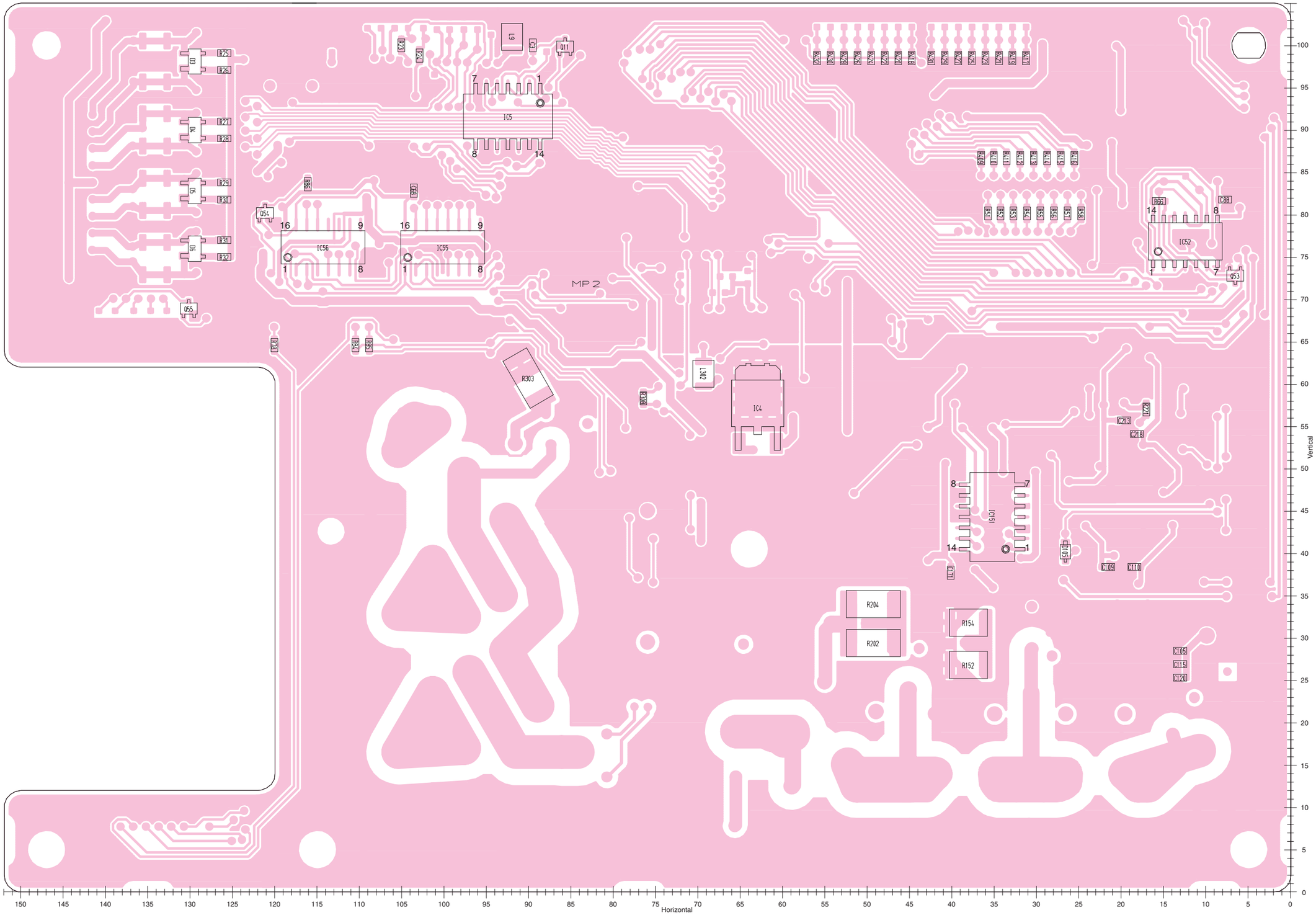

# 8-30 BPF UNIT

• **TOP VIEW**

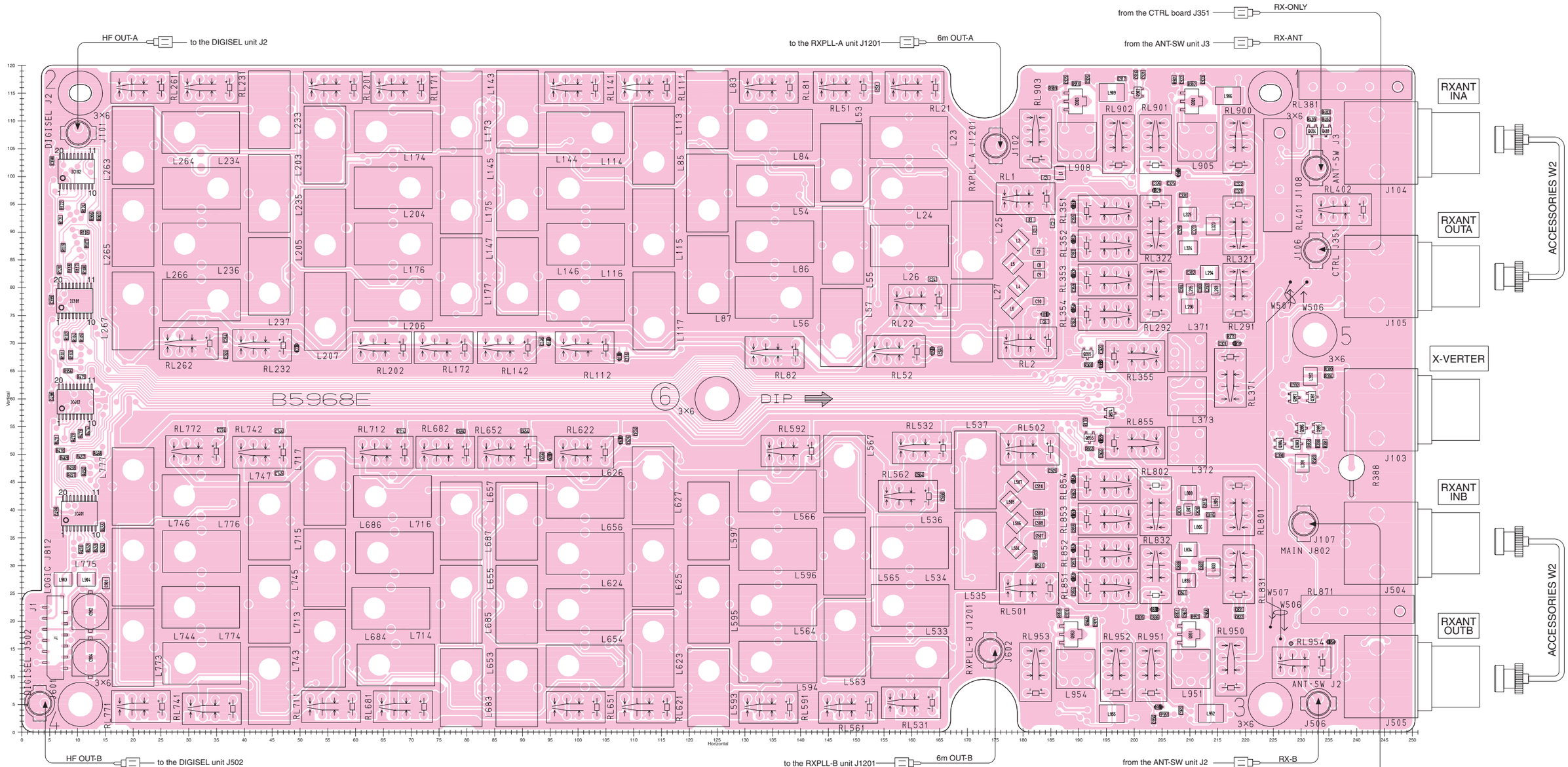


**J1**

| | | | |
|---|---|---|---|
| 12 | GND | MR8V | 11 |
| | T8V | +3R3V | |
| | +15V | NC | |
| | BPSTB | BPOE | |
| | BPDAT | BPSTA | |
| 2 | BPCKA | GND | 1 |

to the LOGIC unit J812

• **BOTTOM VIEW (BPF UNIT)**

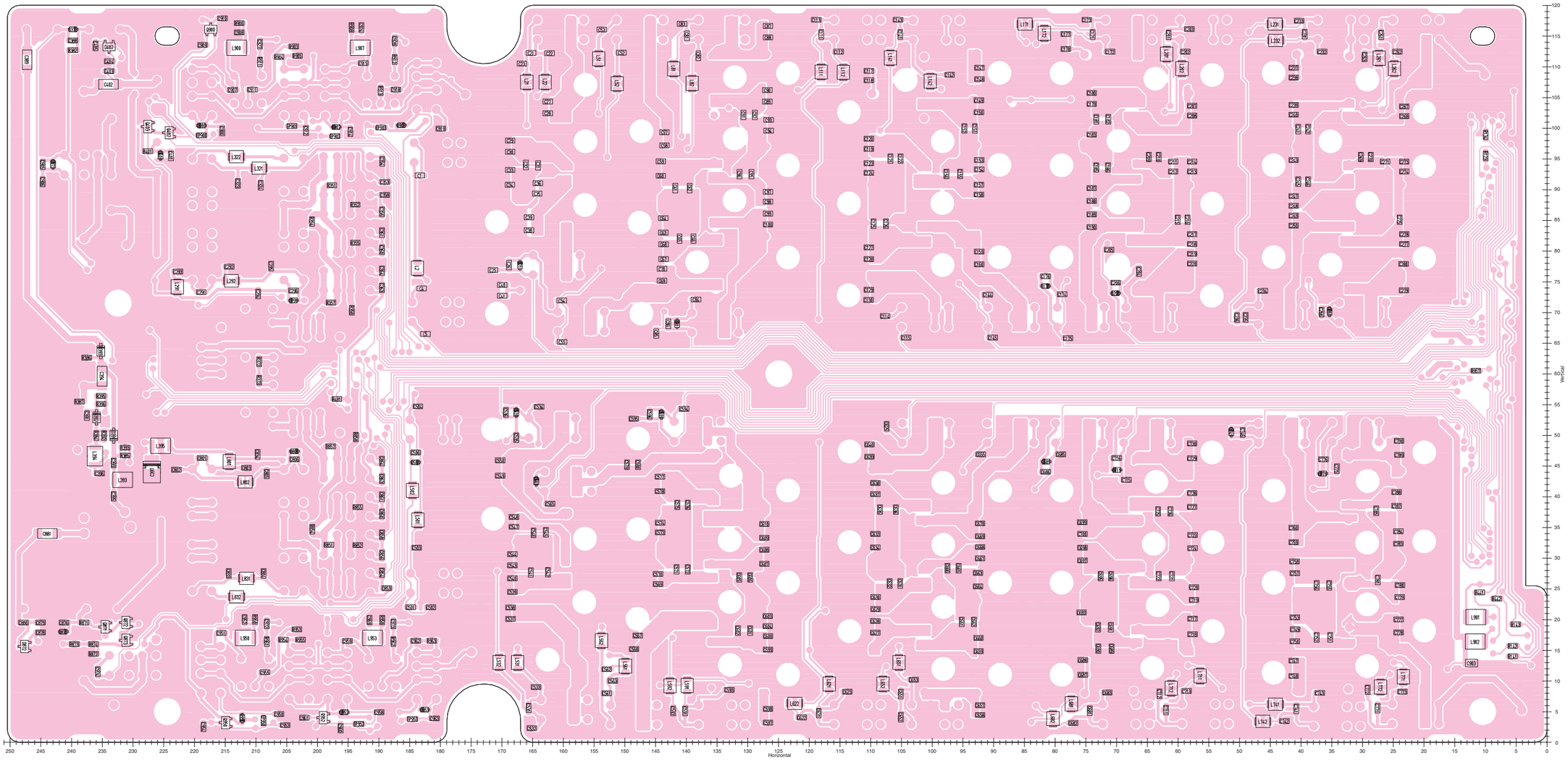

## 8-31 PA200W BOARD

• **TOP VIEW**

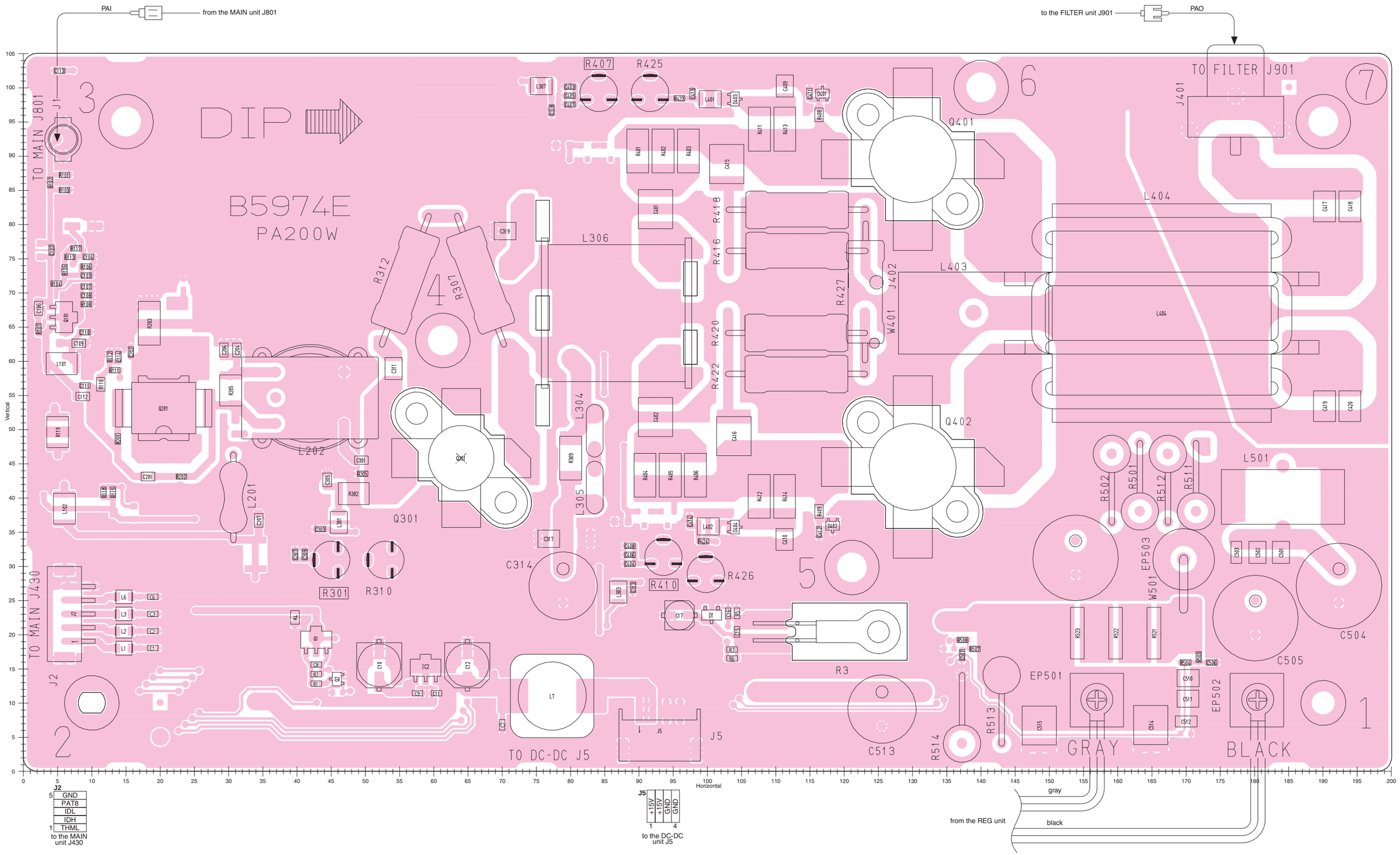


**J2**

| | |
|---|---|
| 5 | GND |
| | PAT8 |
| | IDL |
| | IDH |
| 1 | THML |

to the MAIN unit J430

**J5**

| | | | |
|---|---|---|---|
| +15V | +15V | GND | GND |
| 1 | | | 4 |

to the DC-DC unit J5

from the REG unit

gray

black

• **BOTTOM VIEW (PA200W BOARD)**

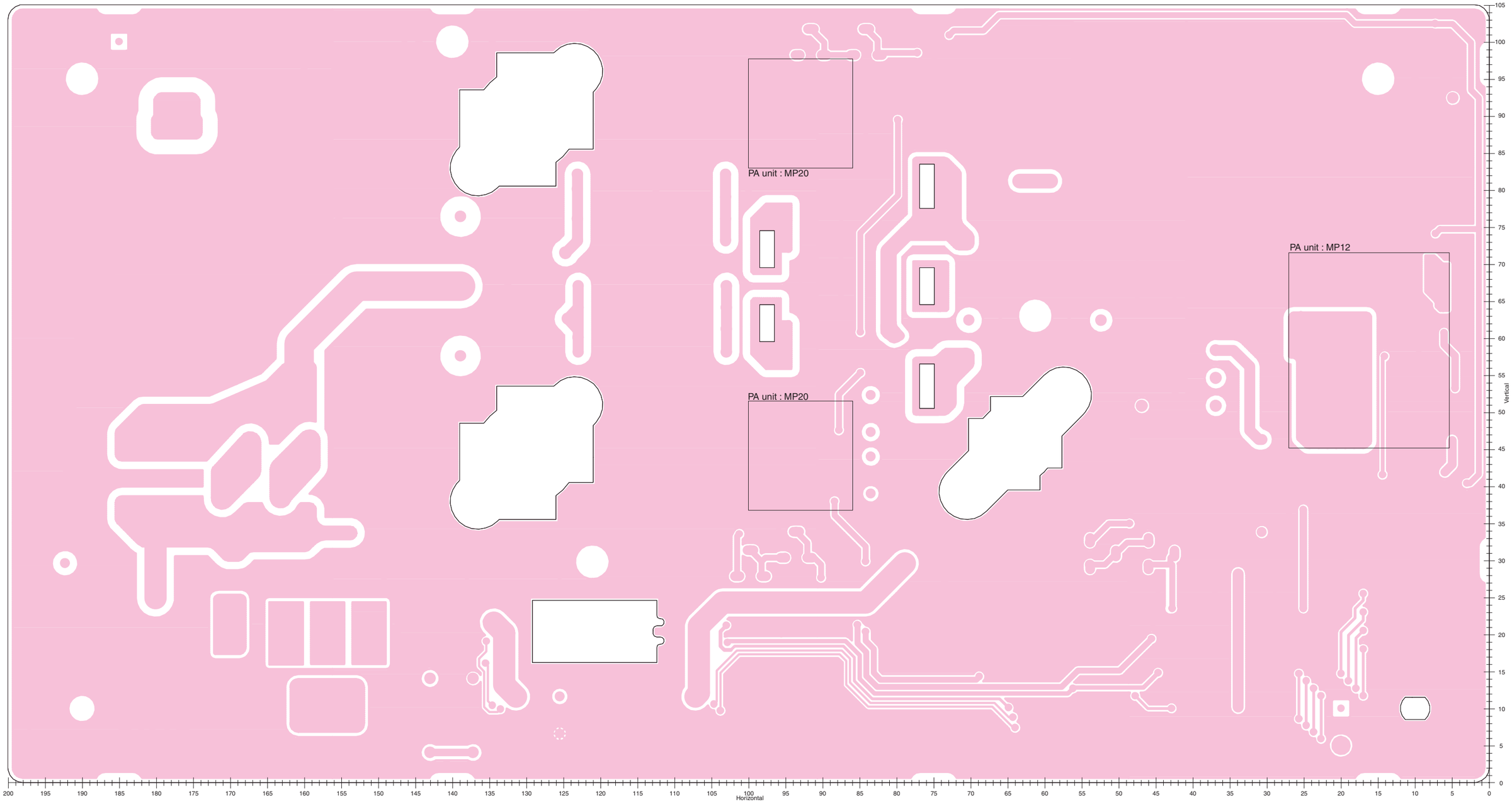

## 8-32 DC-DC UNIT

• **TOP VIEW**

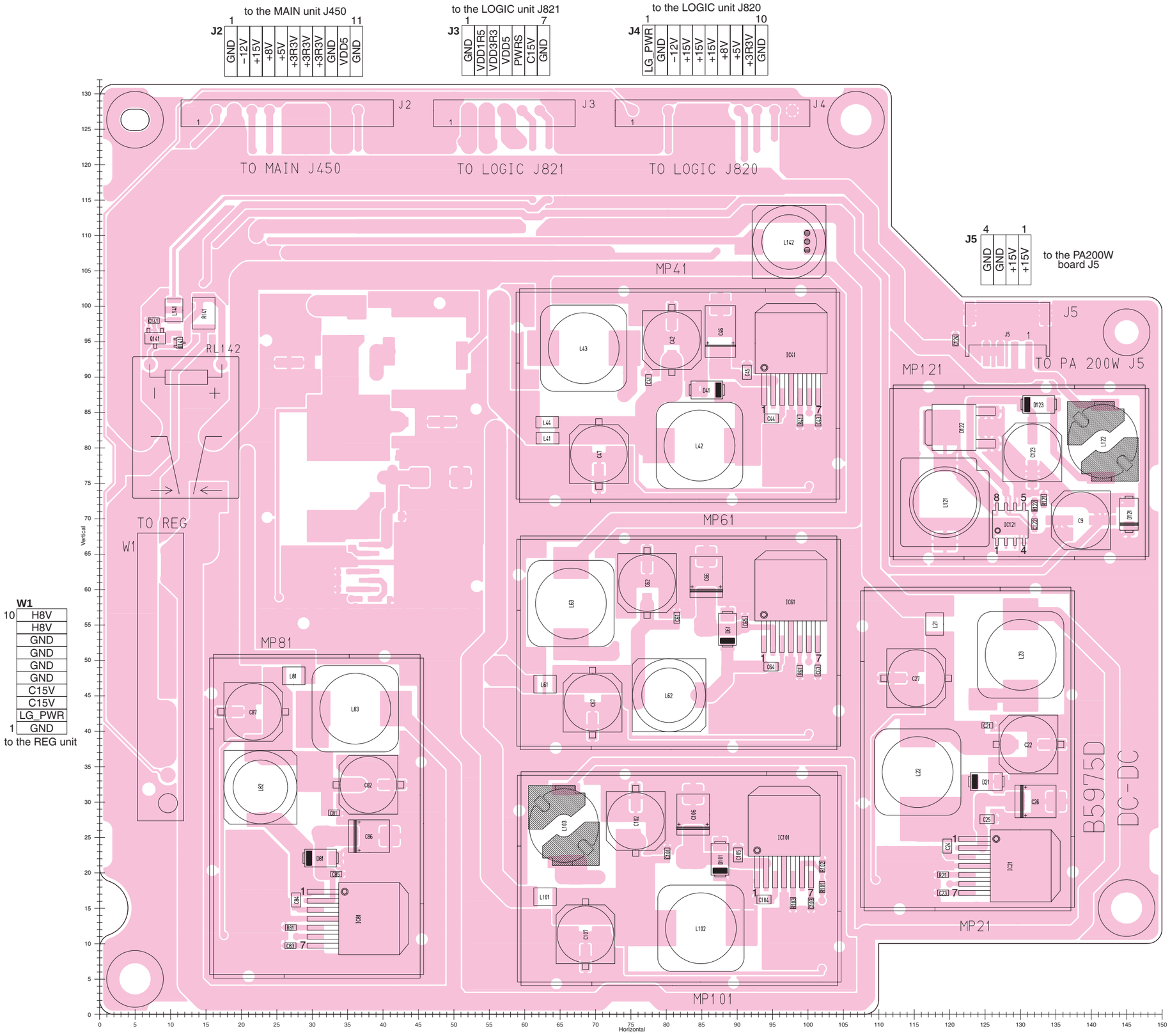


**W1**

| | |
|---|---|
| 10 | H8V |
| | H8V |
| | GND |
| | GND |
| | GND |
| | GND |
| | C15V |
| | C15V |
| | LG_PWR |
| 1 | GND |

to the REG unit

• **BOTTOM VIEW (DC-DC UNIT)**

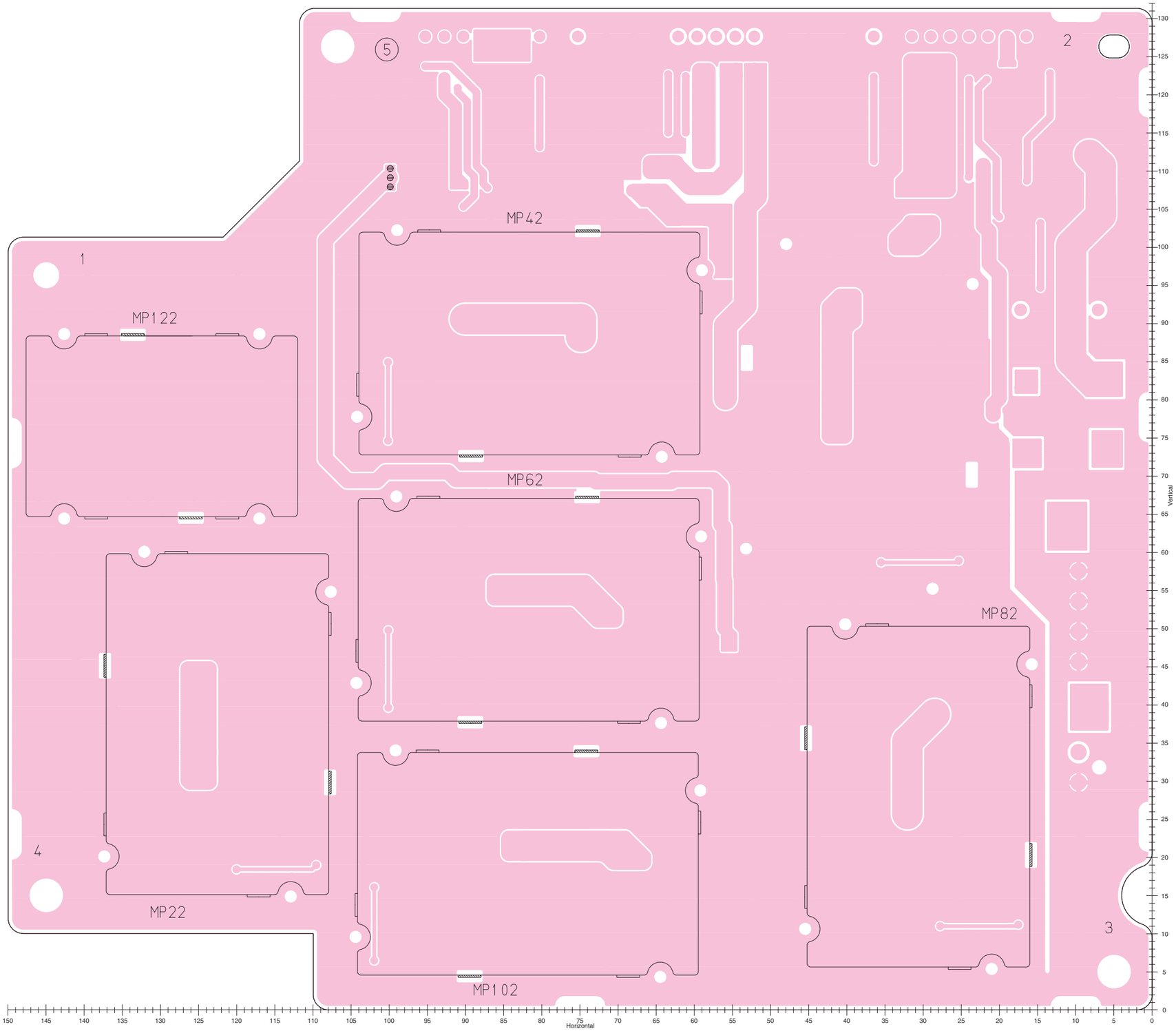

# SECTION 9 BLOCK DIAGRAMS

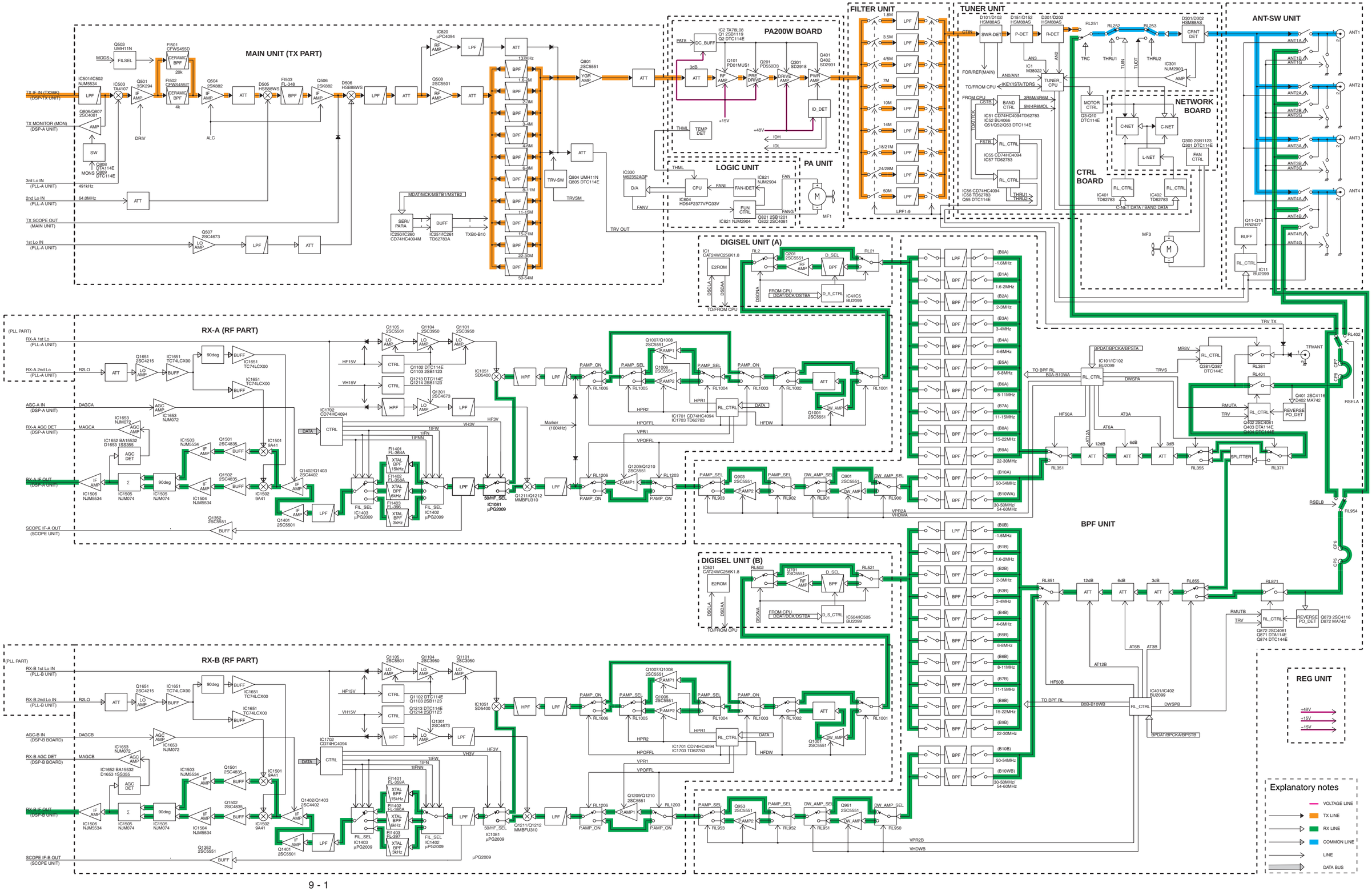

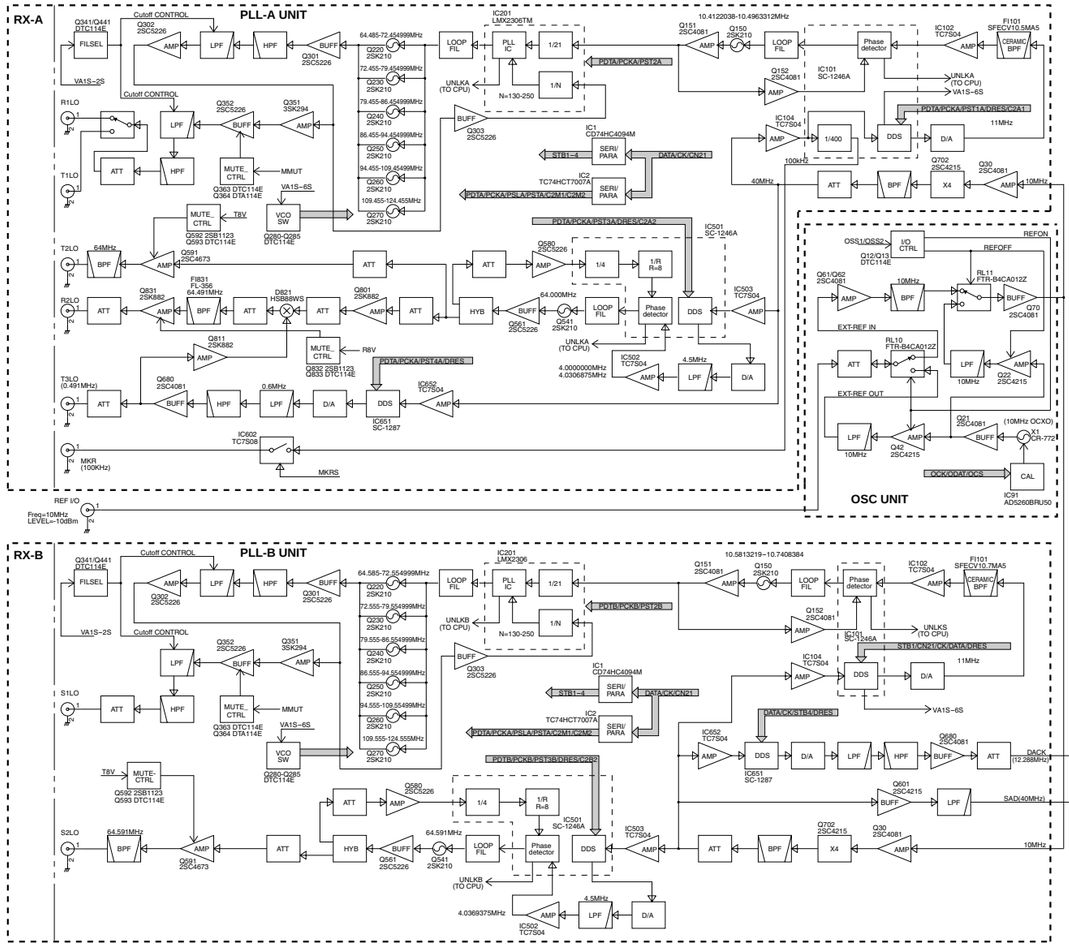
RX-A
PLL-A UNIT
Cutoff CONTROL
Q302 2SC5226
FILSEL
Q341/Q441 DTC114E
AMP
LPF
HPF
BUFF
Q301 2SC5226
VA1S–2S
R1LO
T1LO
T2LO
64MHz
R2LO
T3LO (0.491MHz)
MKR (100KHz)
MKRS
REF I/O
Freq=10MHz LEVEL=–10dBm
64.485-72.454999MHz
72.455-79.454999MHz
79.455-86.454999MHz
86.455-94.454999MHz
94.455-105.454999MHz
105.455-109.455MHz
109.455-124.455MHz
Q220 2SK210
Q230 2SK210
Q240 2SK210
Q250 2SK210
Q260 2SK210
Q270 2SK210
IC201 LMX2306TM
PLL IC
1/21
1/N
N=130-250
LOOP FIL
UNLKA (TO CPU)
10.412038-10.496331MHz
Q151 2SC4081
Q150 2SK210
Q152 2SC4081
IC101 SC-1246A
IC102 TC7S04
FI101 SFECV10.5MA5
CERAMIC BPF
PDTA/PCKA/PST2A
UNLKA (TO CPU)
VA1S–6S
PDTA/PCKA/PST1A/DRES/C2A1
11MHz
IC104 TC7S04
DDS
D/A
1/400
100kHz
40MHz
BUFF
Q303 2SC5226
IC1 CD74HC4094M
SERI/ PARA
STB1–4
DATA/CK/CN21
IC2 TC74HCT7007A
PDTA/PCKA/PSLA/PSTA/C2M1/C2M2
Q702 2SC4215
X4
Q30 2SC4081
10MHz
ATT
BPF
MUTE_ CTRL
MMUT
T8V
VCO SW
Q263 DTC114E
Q264 DTA114E
Q280-Q285 DTC114E
Q592 2SB1123
Q593 DTC114E
PDTA/PCKA/PST3A/DRES/C2A2
IC501 SC-1246A
Q580 2SC5226
1/4
1/R R=8
Q581 2SK210
IC503 TC7S04
Q661 2SC5226
64.000MHz
Q991 2SC4673
FI831 FL-356 64.491MHz
Q831 2SK882
D821 HSB88WS
Q801 2SK882
HYB
Q811 2SK882
R8V
MUTE_ CTRL
Q832 2SB1123
Q833 DTC114E
PDTA/PCKA/PST4A/DRES
Q680 2SC4081
0.6MHz
IC652 TC7S04
IC651 SC-1287
IC502 TC7S04
4.0000000MHz
4.0306875MHz
4.5MHz
UNLKA (TO CPU)
OSC UNIT
REFON
I/O CTRL
OSS1/OSS2
Q12/Q13 DTC114E
REFOFF
RL11 FTR-B4CA012Z
Q61/Q62 2SC4081
10MHz
EXT-REF IN
EXT-REF OUT
RL10 FTR-B4CA012Z
Q21 2SC4081
(10MHz OCXO)
X1 CR-772
OCK/ODAT/OCS
CAL
IC91 AD5260BRU50
RX-B
PLL-B UNIT
10.583219–10.7408384
PDTB/PCKB/PST2B
S1LO
S2LO
64.585-72.554999MHz
72.555-79.554999MHz
79.555-86.554999MHz
86.555-94.554999MHz
94.555-109.554999MHz
109.555-124.555MHz
64.591MHz
Q541 2SK210
Q561 2SC5226
PDTB/PCKB/PST3B/DRES/C2B2
4.0369375MHz
SAD(40MHz)
PACK (12.288MHz)
SCOPE UNIT
SCOPE IN/OUT
SDX0/SFSR1/SFSX1/SDR1/CLKR1
/RESET
TMS320C6711C
DSP
IC601
A/D
IC501 AD7650AST
IC404 μPC4094
IC403 μPC4094
IC401 μPC4094
IC405 NJM2904M
D401/D402 MA25111
AGC DET
AGC AMP
ATTV
D4 HSB88WS
D9 2SC5551
Q1 2SC4081
D1/D2 CPH5513
PIN-ATT
0–60dB
IC31 μPD2009
TX SCOPE (MAIN UNIT)
RX-A SIF IN (RX-A UNIT)
RX-B SIF IN (RX-B UNIT)
SSA
SSB
Q202 2SK882
Q201 2SK882
FI201 FL-357
XTAL BPF
BW=6KHz fc=45MHz
D101 HSB88WS
BW=1MHz
fc=64.455MHz
fc=220kHz
f=200kHz
40MHz
IC602/IC603 SN74LVC1G04DCK
18.455MHz–20.455MHz
Q101 2SC4673
LO AMP
IC801 LMX2306TM
IC803 TC74HCT7007A
LEVEL CONV
FROMCPU
SDAT/SCK/SSTB
1/448
1/400
Phase detector
LOOP FIL
Q831 2SC5226
Q841 2SC4081
44.8MHz
Q842 2SC5226
Q843 2SC5226
46MHz
Q301 2SC4673
3dB
Q720 2SC4406
IC820 AD9857AST
Q701 2SC4406
Q810 2SC4406
MUTE_ CTRL
SMUT
Q872 DTC114E
SDAT/SCK/SSTB/FSP/SYNC/IARESET
FROM CPU
DSP-TX BOARD
12.288MHz
IC821 NJM2172
MICPLAY
MICV
MMUT
IC201 TC4W53
IC460 TC4W53
IC230 μPC4570
MCPS
IC451 TC7S04
IC452 SN74LVC1GU04DCKR
CLK AMP
MCLK
/CAL
IC341/IC371 NJM5534
IC401 AKS394
IC551 AD1855
IC601/IC651 NJM5534
IC701 NJM5534
TO MAIN UNIT TX PART TX35K (TX IF36kHz OUT)
IC301 NJM5534
IC801/IC831 NJM5534
COMMAND IN
TSB/SCK/DSB/DX1/DFR1/DFX1
COMP METER OUT
DRESL
CTFL/DVOX (CW STASUS/VOX TO CPU)
DSKY(CW/RTTY KEYING) FROMCPU
IC871 NJM5534
X151 CR-754 (30MHz)
R+
R–
ANVOX
IC495 SN74LVC1G08DCKR
IN
S/P DIF
OUT
SPDI(TO LOGIC)
SPDO(FROM LOGIC)
A ACC(1) MOD
B ACC(1) MOD
MODVA
MODVB
MICREC
IC821 NJM2172
IC810 NJM2172
IC50 PS7122AL
Q50/Q51 DTC114TU
RL50 OMR-109F
EXRL1
EXRL2
SEND RELAY
RL-CTRL
IC1 NJM2058
DCAMP
A ACC(2) BAND
B ACC(2) BAND
BNDM
BNDS
A ACC(2) TRV
B ACC(2) TRV
Q7 2SC4081
TR/CTRL
TRVI
Q4 2SC4081
RTTYKEY
RTKI
A ACC(1) RTTY
B ACC(1) RTTY
A ACC(1) SQLS
B ACC(1) SQLS
Q1 DTC114TU
SQLCTRL
SQLAM
Q2 DTC114TU
SQLAS
KEY
A ACC(1) AF
B ACC(1) AF
Q8 2SC4081
Q9 2SC4081
IC4 NJM2172
IC3 TC4W53
IC5 TC4W53
IC2 μPC4570
A_AFA
B_AFA
AAFVA/(FROM CPU)
AAFVB/(FROM CPU)
Q6 DTA114E
Q5 2SD1619
SEND -CTRL
SENI(TO CPU)
ASND(FROM CPU)
A ACC(1) SEND
B ACC(1) SEND
A ACC(2) SEND
B ACC(2) SEND
Q52 2SC4081
SW
MUTEI
MEMORY KEYER /VOICE RECORD
MUTE
EPAD
METER OUT
METS
METM
ANTI VOX
IC550 TA79L05
–5V REG
–12V
IC450 SI-3012KS
1.2V REG
+3R3V
IC451 SI-3012KS
IC452 SI-3012KS
D1R2V_A
D1R2V_B
D1R2V_T
IC490 TC4W53
MON (TX MONITOR)
IFIN_A (RX-A)
MONS
DSP-A BOARD
SMET/RTTYM OUT
DSPCK/DSPSI/WX1A/DFRA/DFXA
IC1 TMS320C6713
IC701 NJM5534
IC601/IC651 NJM5534
IC551 AK4394
IC341/IC371 NJM5534
IC331 TC7W53
IC401 AKS394
IC501 μPC4570
AGC DET (RX-A)
IC771 BU9480
AGC OUT (RX-A)
TNDA(FM TONE) NSQA/VSQA(NOISE/VOICE SQL) RTDA(RTTY DEC)
DSP-B BOARD
IFIN_B (RX-B)
AGC OUT (RX-B)
CROSS
IC100 TC4W53
IC101 TC4W53
RXSREC
RXPREC
REF I/O
Freq=10MHz LEVEL=–10dBm
CHASSIS UNIT
INT SP
MAIN SP OUT
SUB SP OUT
SPON
MUTE
ATT
IC140 LA4485
RL140 NA-12W
RL141 NA-12W
PWR AMP
IC105 NJM2172
IC102 μPC4570
SQLM
SQL SW
Q100 2SJ144
Q101 2SJ144
SQLS
AFGVM1
AFGVM2
AFGVS1
AFGVS2
MBEEP
SBEEP
IC1 NJM2058
AFAMP
SW
AFO (MIC AF)
MAFS
SUB AF
MAIN AF
IC251/IC261/IC291/IC311 TD62783A
IC250/IC260/IC290/IC310 CD74HC4094M
SWITCH
SIGNAL
BUFF
SERI/ PARA
MDAT/MCK/MSTB1/MSTB2
IC330/IC331 M62352GP
CONTROL
D/A
MF1
MIC UNIT
R584
FUN CTRL
IC491 NJM2058
Q490 DTC114E
Q491 2SB1132
IC62 2SA1576
EXT ALC-AMP
A ACC(1) ALC
A ACC(2) ALC
B ACC(1) ALC
B ACC(2) ALC
ALC
ALC TO MAIN TX PART
IC60 NJM2058
SWR
ID
APC
REFV
IDHV
IDLV
IDL
FORV
POCV
POWSET
HFS/50MS/AMS
IC61 NJM2058
DCAMP
VDL
ALCL
MAIN UNIT
FRONT UNIT
MPHONE
PHONES
SPHONE
PHI(TO FRONT CPU)
IC182 TPA611A2DGN
IC181 TC4W53
IC180 NJM2172
PMIX
PHML1
PHML2
PHSL1
PHSL2
Explanatory notes
VOLTAGE LINE
TX LINE
RX LINE
COMMON LINE
LINE
DATA BUS

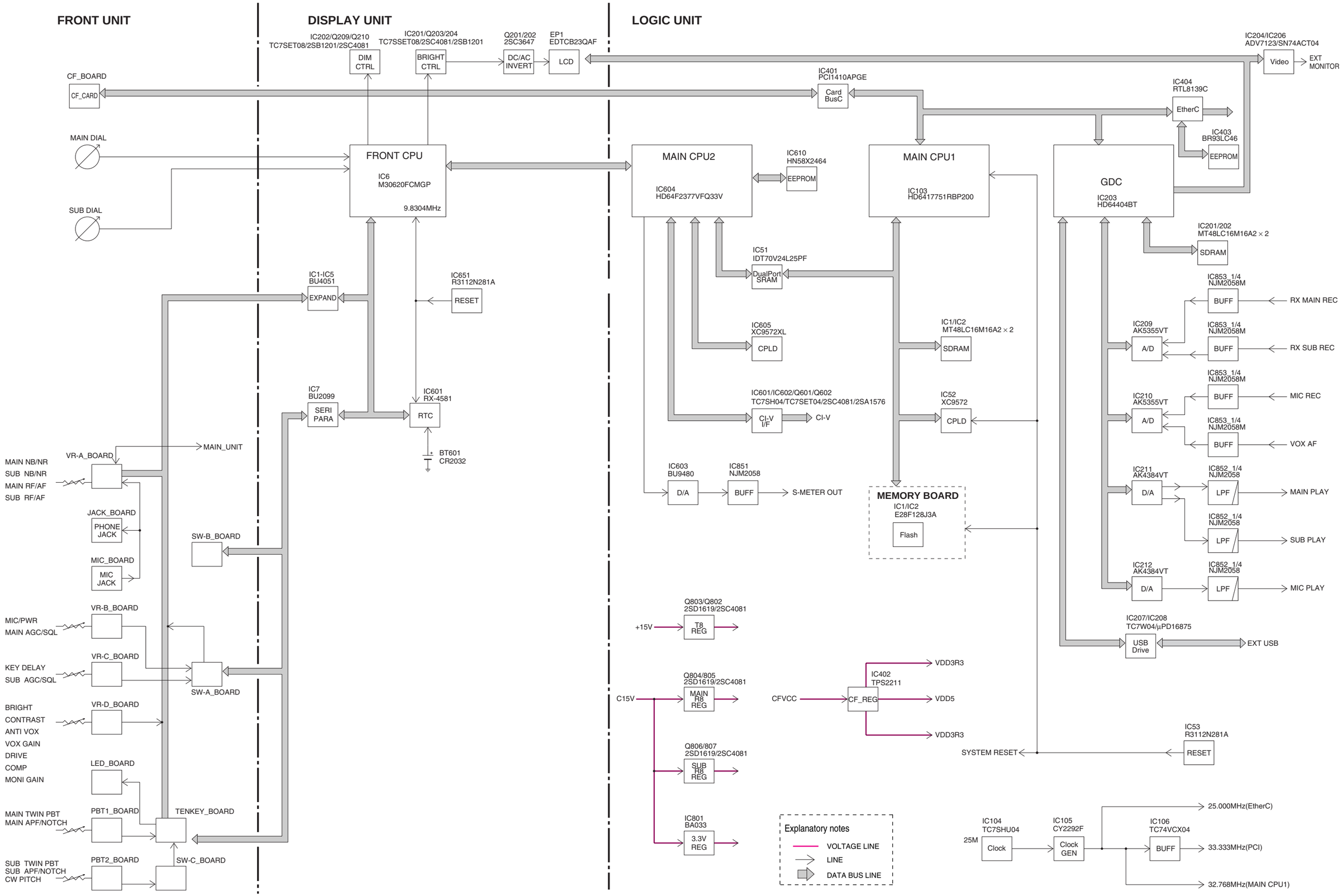
FRONT UNIT
DISPLAY UNIT
LOGIC UNIT
IC202/Q209/Q210
TC7SET08/2SB1201/2SC4081
DIM CTRL
IC201/Q203/204
TC7SSET08/2SC4081/2SB1201
BRIGHT CTRL
Q201/202
2SC3647
DC/AC INVERT
EP1
EDTCB23QAF
LCD
IC204/IC206
ADV7123/SN74ACT04
Video
EXT MONITOR
CF_BOARD
CF_CARD
IC401
PCI1410APGE
Card BusC
IC404
RTL8139C
EtherC
IC403
BR93LC46
EEPROM
MAIN DIAL
SUB DIAL
FRONT CPU
IC6
M30620FCMGP
9.8304MHz
MAIN CPU2
IC604
HD64F2377VFQ33V
IC610
HN58X2464
EEPROM
MAIN CPU1
IC103
HD6417751RBP200
GDC
IC203
HD64404BT
IC201/202
MT48LC16M16A2 × 2
SDRAM
IC1-IC5
BU4051
EXPAND
IC651
R3112N281A
RESET
IC51
IDT70V24L25PF
DualPort SRAM
IC853_1/4
NJM2058M
BUFF
RX MAIN REC
IC605
XC9572XL
CPLD
IC1/IC2
MT48LC16M16A2 × 2
SDRAM
IC209
AK5355VT
A/D
IC853_1/4
NJM2058M
BUFF
RX SUB REC
IC7
BU2099
SERI PARA
IC601
RX-4581
RTC
IC601/IC602/Q601/Q602
TC7SH04/TC7SET04/2SC4081/2SA1576
CI-V I/F
CI-V
IC52
XC9572
CPLD
IC853_1/4
NJM2058M
BUFF
MIC REC
IC210
AK5355VT
A/D
IC853_1/4
NJM2058M
BUFF
VOX AF
MAIN_UNIT
VR-A_BOARD
MAIN NB/NR
SUB NB/NR
MAIN RF/AF
SUB RF/AF
JACK_BOARD
PHONE JACK
MIC_BOARD
MIC JACK
SW-B_BOARD
IC603
BU9480
D/A
IC851
NJM2058
BUFF
S-METER OUT
MEMORY BOARD
IC1/IC2
E28F128J3A
Flash
IC211
AK4384VT
D/A
IC852_1/4
NJM2058
LPF
MAIN PLAY
IC852_1/4
NJM2058
LPF
SUB PLAY
IC212
AK4384VT
D/A
IC852_1/4
NJM2058
LPF
MIC PLAY
VR-B_BOARD
MIC/PWR
MAIN AGC/SQL
VR-C_BOARD
KEY DELAY
SUB AGC/SQL
SW-A_BOARD
VR-D_BOARD
BRIGHT
CONTRAST
ANTI VOX
VOX GAIN
DRIVE
COMP
MONI GAIN
LED_BOARD
MAIN TWIN PBT
MAIN APF/NOTCH
PBT1_BOARD
TENKEY_BOARD
SUB TWIN PBT
SUB APF/NOTCH
CW PITCH
PBT2_BOARD
SW-C_BOARD
BT601
CR2032
Q803/Q802
2SD1619/2SC4081
+15V
T8 REG
IC207/IC208
TC7W04/µPD16875
USB Drive
EXT USB
Q804/805
2SD1619/2SC4081
C15V
MAIN R8 REG
IC402
TPS2211
CFVCC
CF_REG
VDD3R3
VDD5
VDD3R3
Q806/807
2SD1619/2SC4081
SUB R8 REG
IC53
R3112N281A
RESET
SYSTEM RESET
IC801
BA033
3.3V REG
Explanatory notes
VOLTAGE LINE
LINE
DATA BUS LINE
IC104
TC7SHU04
25M
Clock
IC105
CY2292F
Clock GEN
IC106
TC74VCX04
BUFF
25.000MHz(EtherC)
33.333MHz(PCI)
32.768MHz(MAIN CPU1)

# SECTION 10 WIRING DIAGRAMS

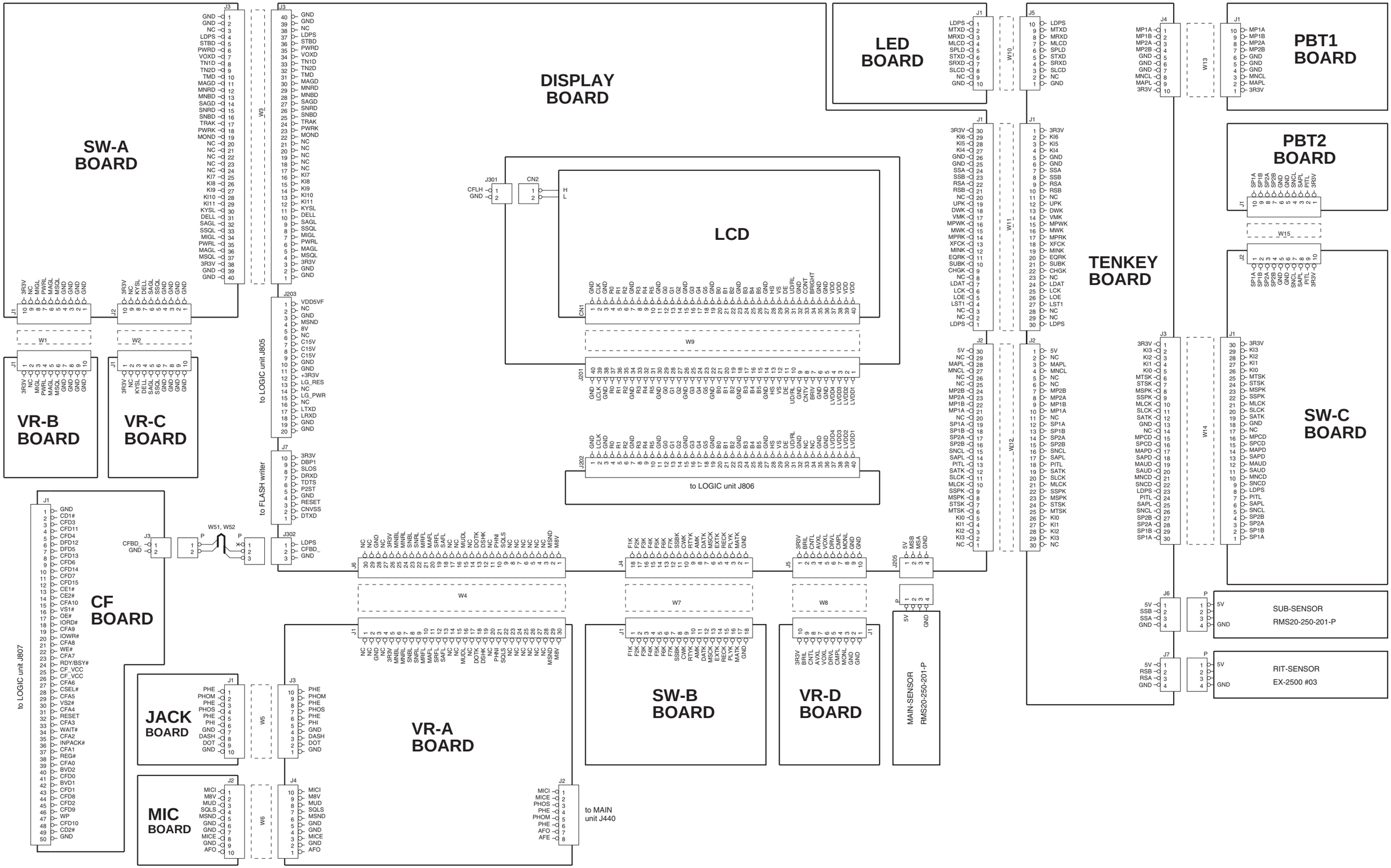

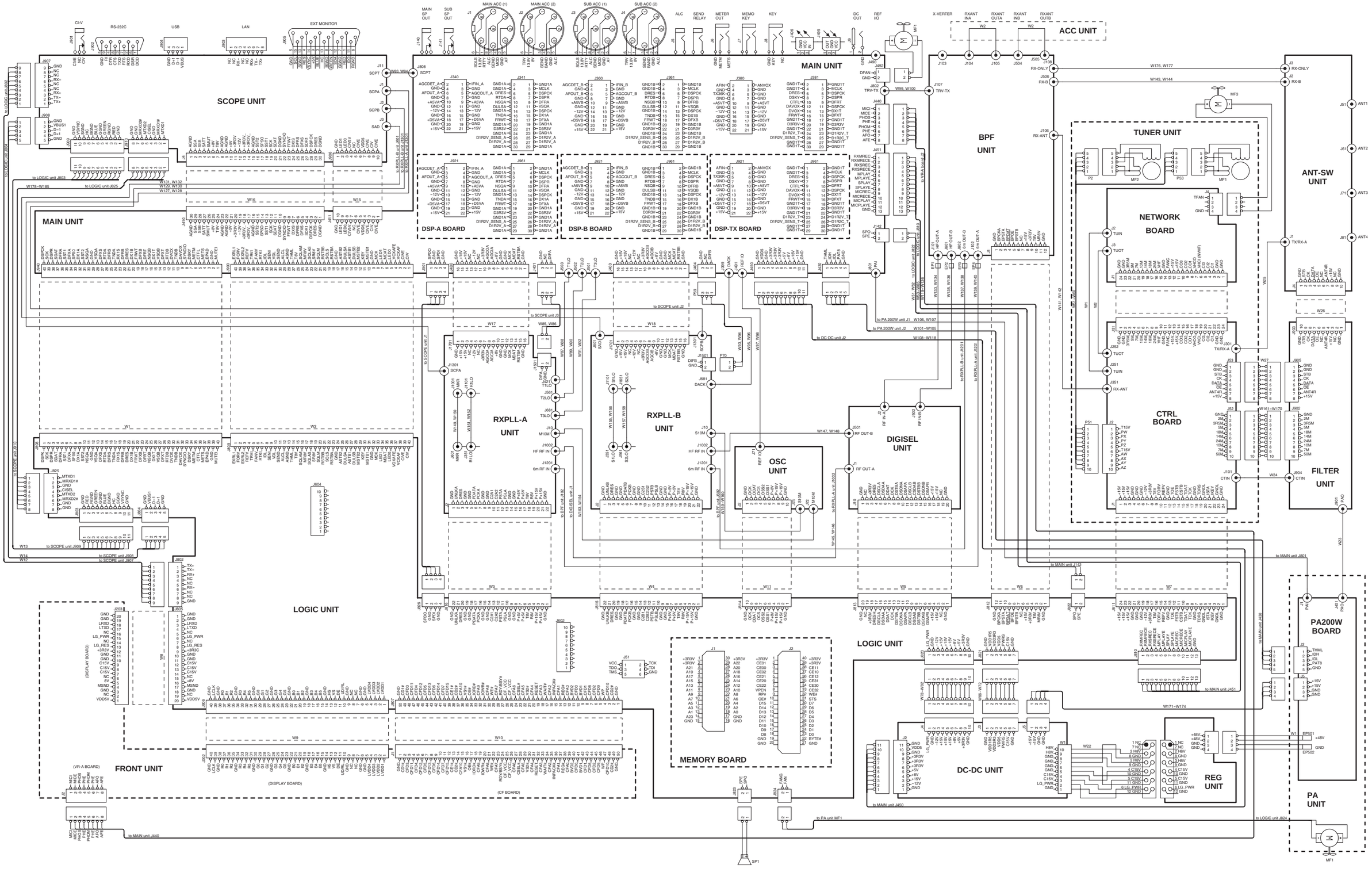
SCOPE UNIT
MAIN UNIT
DSP-A BOARD
DSP-B BOARD
DSP-TX BOARD
RXPLL-A UNIT
RXPLL-B UNIT
OSC UNIT
DIGISEL UNIT
BPF UNIT
ACC UNIT
TUNER UNIT
NETWORK BOARD
CTRL BOARD
FILTER UNIT
ANT-SW UNIT
LOGIC UNIT
FRONT UNIT
DC-DC UNIT
REG UNIT
PA200W BOARD
PA UNIT
MEMORY BOARD
(DISPLAY BOARD)
(CF BOARD)
(VR-A BOARD)
(DISPLAY-A BOARD)

# SECTION 11 VOLTAGE DIAGRAMS

## 11-1 DISPLAY BOARD

## 11-2 CF BOARD

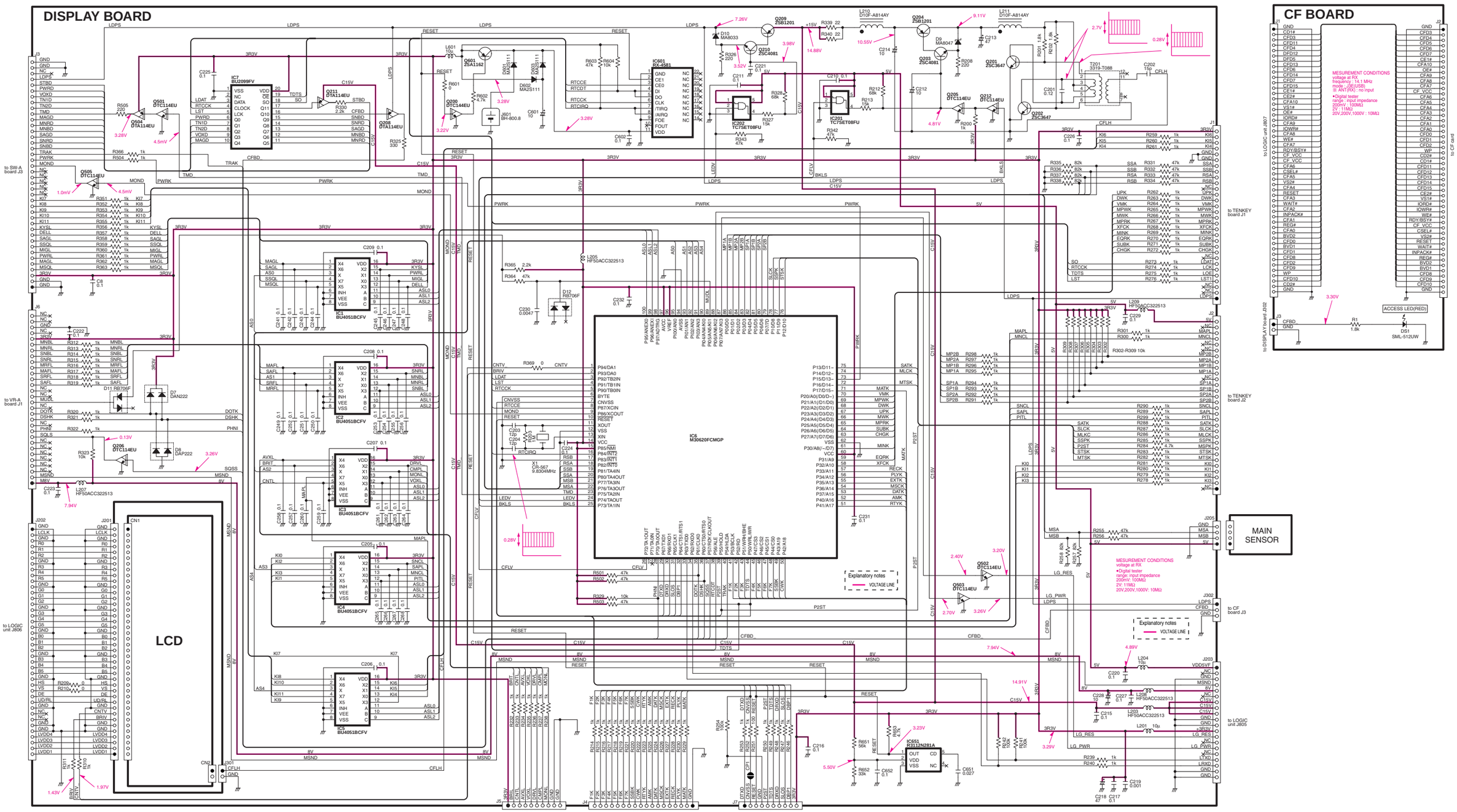
DISPLAY BOARD
CF BOARD
LCD
MAIN SENSOR
to SW-A board J3
to VR-A board J1
to VR-D board J1
to SW-B board J1
to FLASH writer
to TENKEY board J1
to TENKEY board J2
to LOGIC unit J806
to LOGIC unit J807
to CF board J3
to LOGIC unit J805
to DISPLAY board J302
to CF card
MESUREMENT CONDITIONS voltage at RX frequency : 14.1 MHz mode : DE(USB) ※ ANT(RX) : no input
•Digital tester range : input impedance 200mV : 100MΩ 2V : 11MΩ 20V,200V,1000V : 10MΩ
ACCESS LED(RED)
Explanatory notes
VOLTAGE LINE
IC601 RX-4581
IC6 M30620FCMGP
IC651 R3112N281A
IC202 TC7SET08FU
IC201 TC7SET08FU
IC1 BU4051BCFV
IC2 BU4051BCFV
IC3 BU4051BCFV
IC4 BU4051BCFV
IC5 BU4051BCFV
X1 CR-567 9.8304MHz
D10 MA8033
D9 MA8047
D7 DAN222
D8 DAP222
D11 RB706F
D12 RB706F
Q209 2SB1201
Q210 2SC4081
Q204 2SB1201
Q203 2SC4081
Q201 2SC3647
Q202 2SC3647
Q601 2SA1162
Q200 DTC144EU
Q208 DTA114EU
Q211 DTA114EU
Q501 DTC114EU
Q504 DTA114EU
Q505 DTC114EU
Q206 DTC114EU
Q205 DTC114EU
Q212 DTC114EU
Q502 DTC114EU
Q503 DTC114EU
T201 3319-T088
L601 10µ
L205 HF50ACC322513
L206 HF50ACC322513
L207 HF50ACC322513
L209 HF50ACC322513
L210 D10F-A814AY
L211 D10F-A814AY
L201 10µ
L203 HF50ACC322513
L204 10µ
DS1 SML-512UW
LCD
CN1
CN2
J301
J201
J202
J203
J205
J302
J1
J2
J3
J4
J5
J6
J7
J8
J9
J10
J11
J12
J13
J14
J15
J16
J17
J18
J19
J20
J21
J22
J23
J24
J25
J26
J27
J28
J29
J30
J31
J32
J33
J34
J35
J36
J37
J38
J39
J40

## 11-3 SW-A BOARD

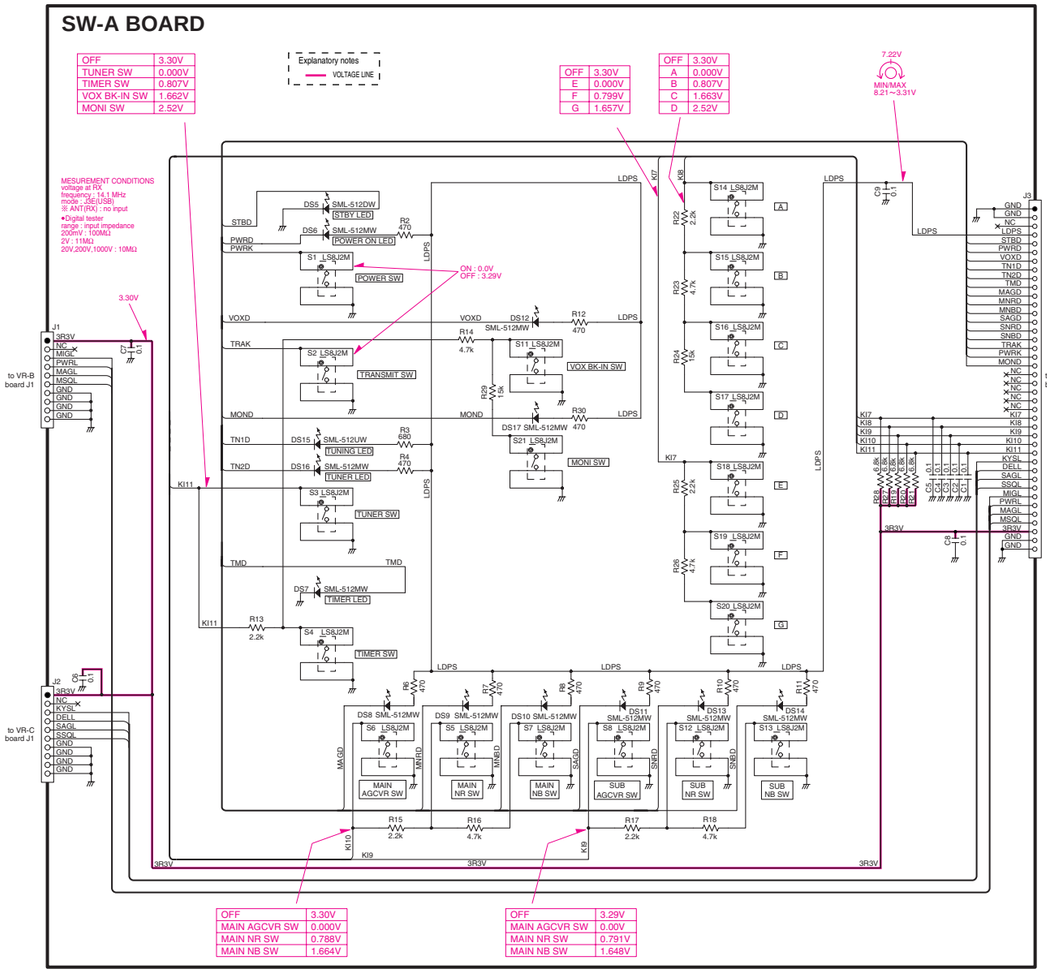


## 11-4 VR-B BOARD

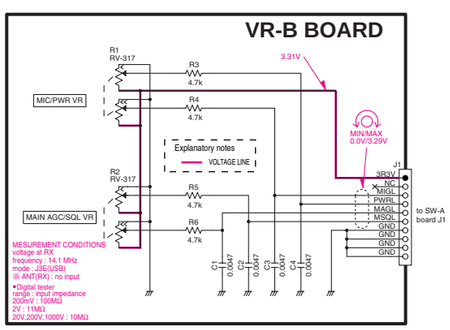


## 11-5 VR-C BOARD

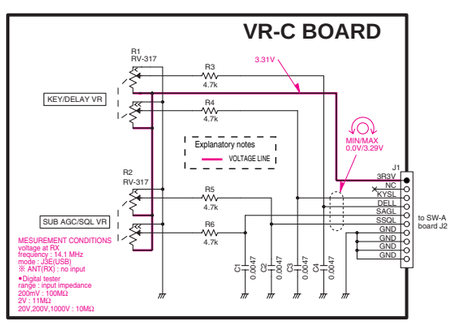


## 11-6 VR-A BOARD

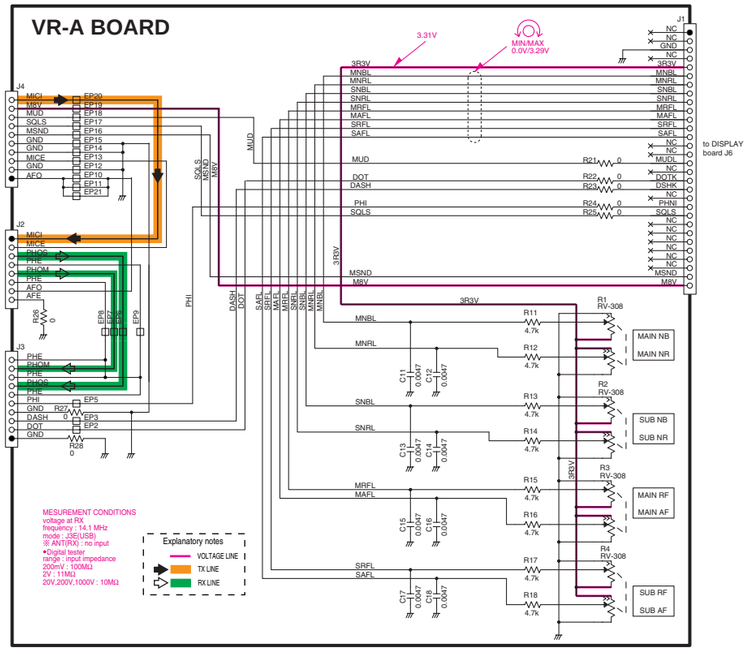


## 11-7 MIC BOARD

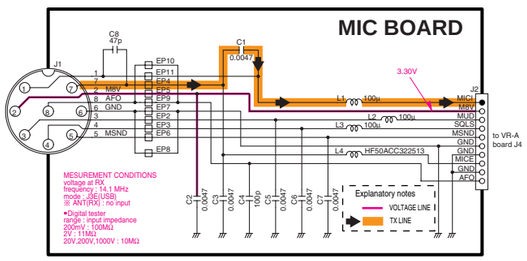


## 11-8 JACK BOARD

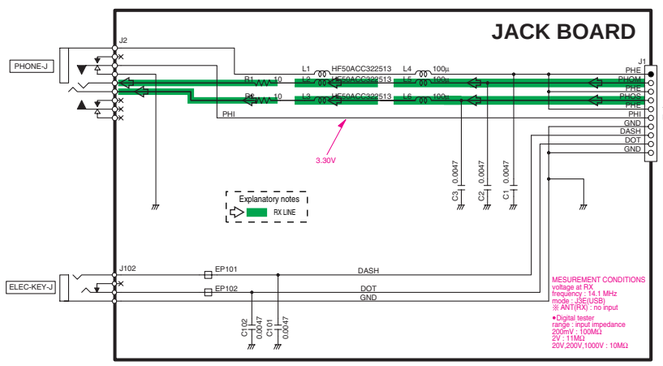


## 11-9 VR-D BOARD

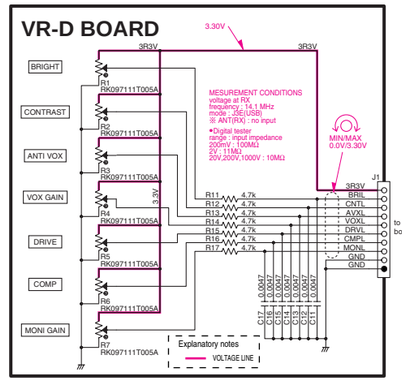


## 11-10 SW-B BOARD

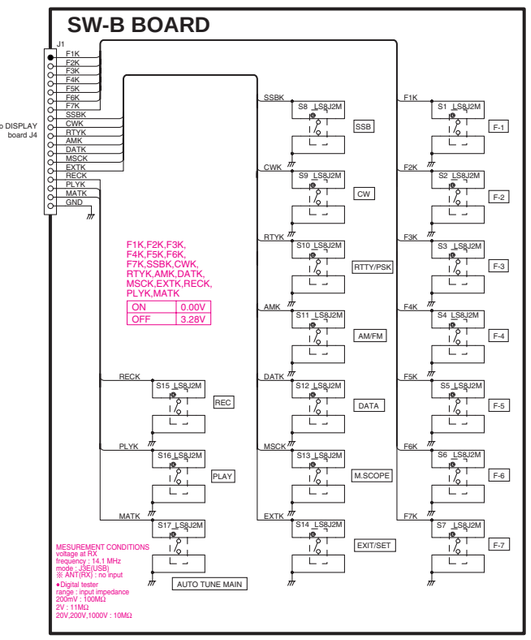

# 11-11 TENKEY BOARD

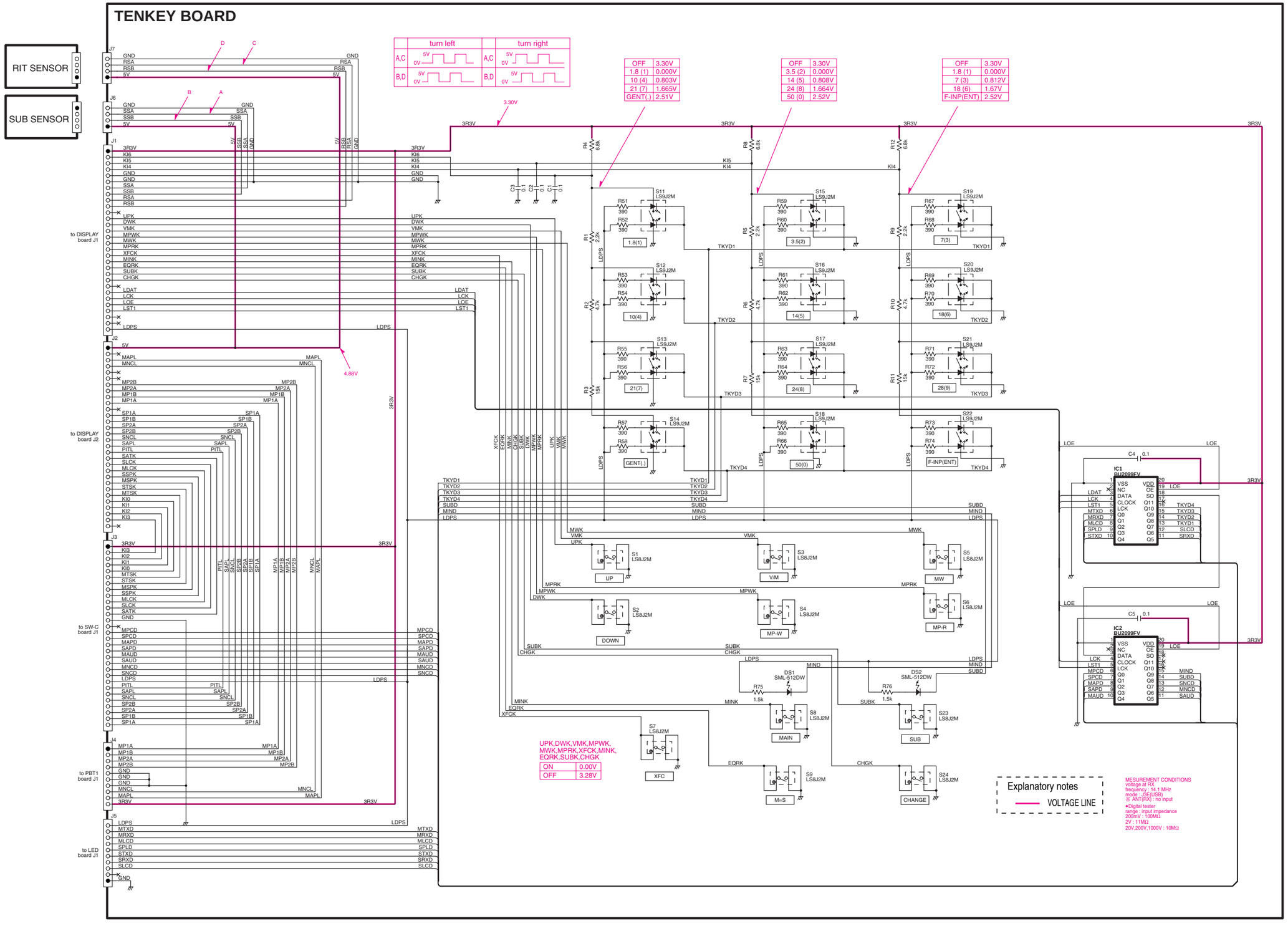

## 11-12 SW-C BOARD

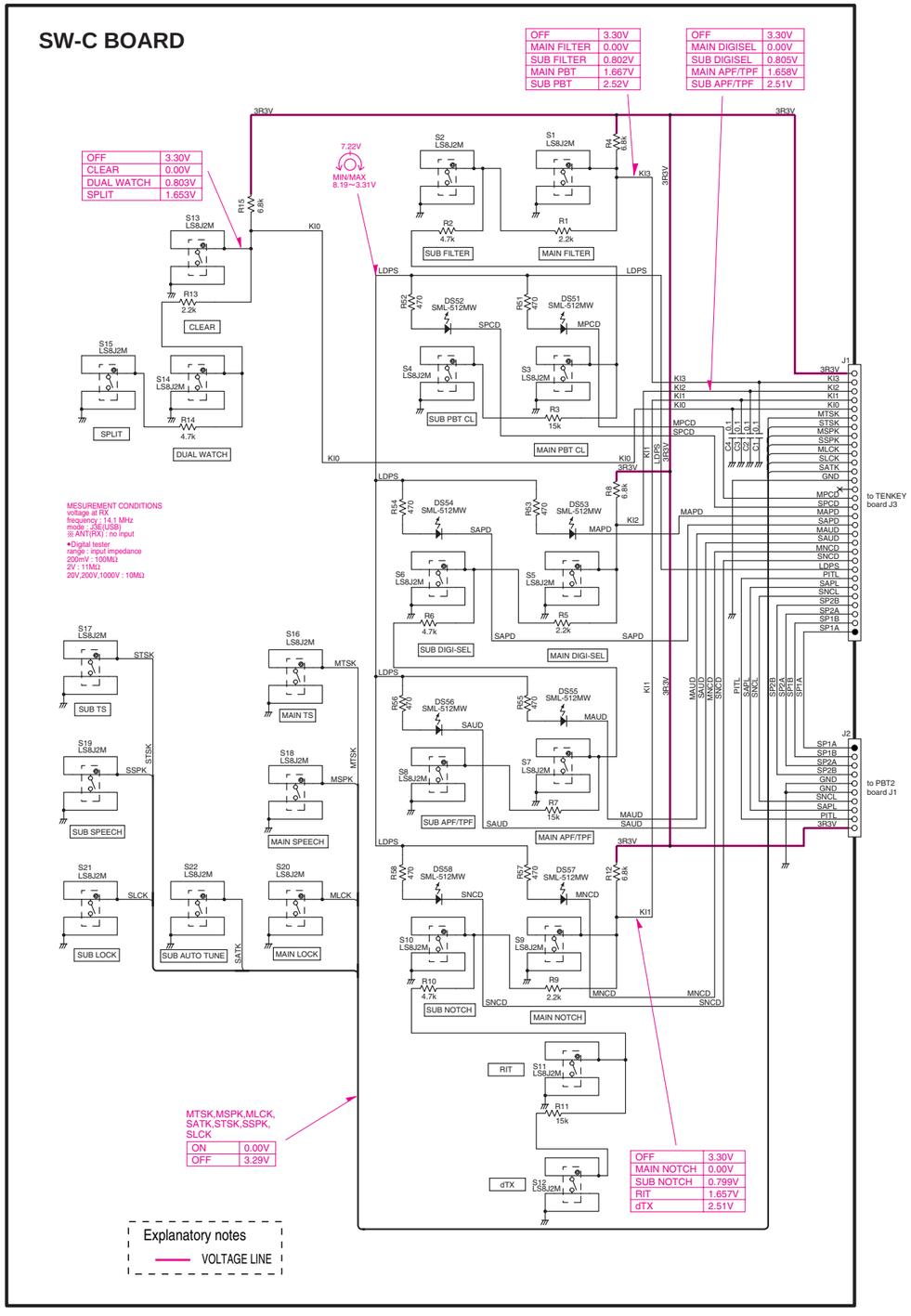


## 11-13 PBT1 BOARD

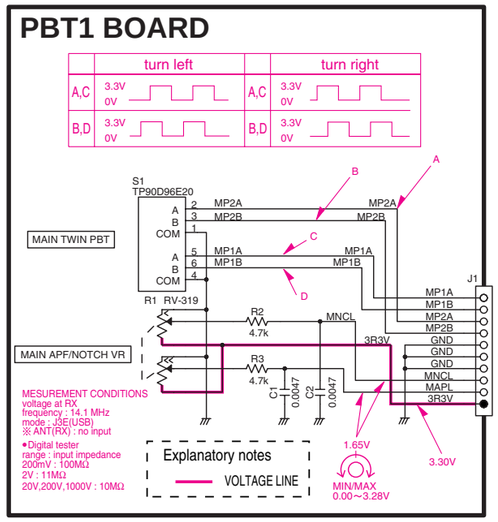


## 11-14 PBT2 BOARD

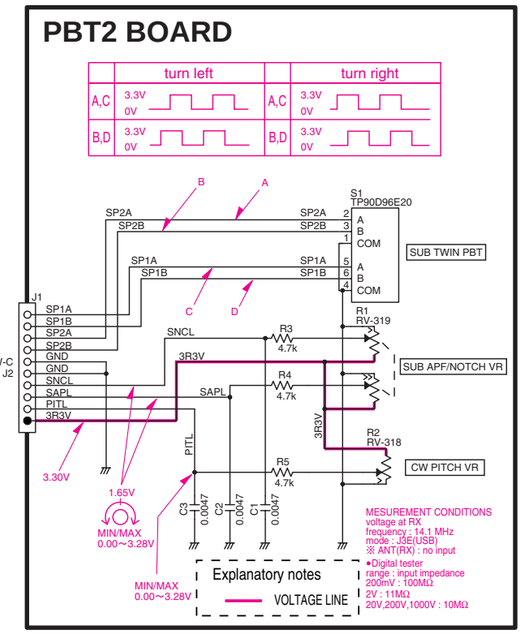


## 11-15 LED BOARD

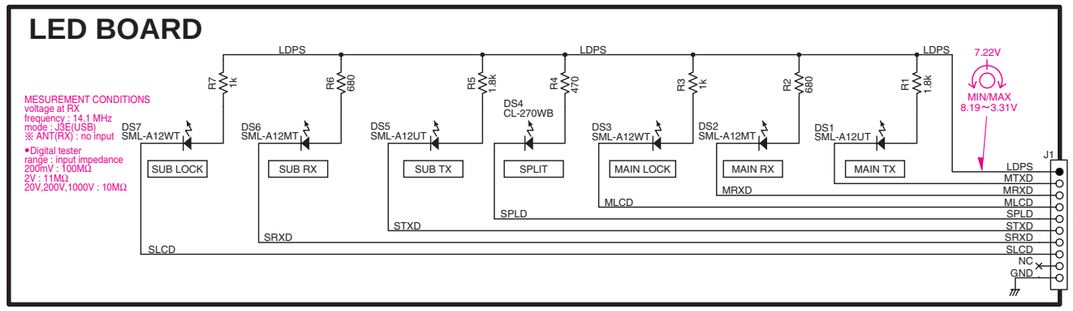

# 11-16 LOGIC UNIT AND MEMORY BOARD

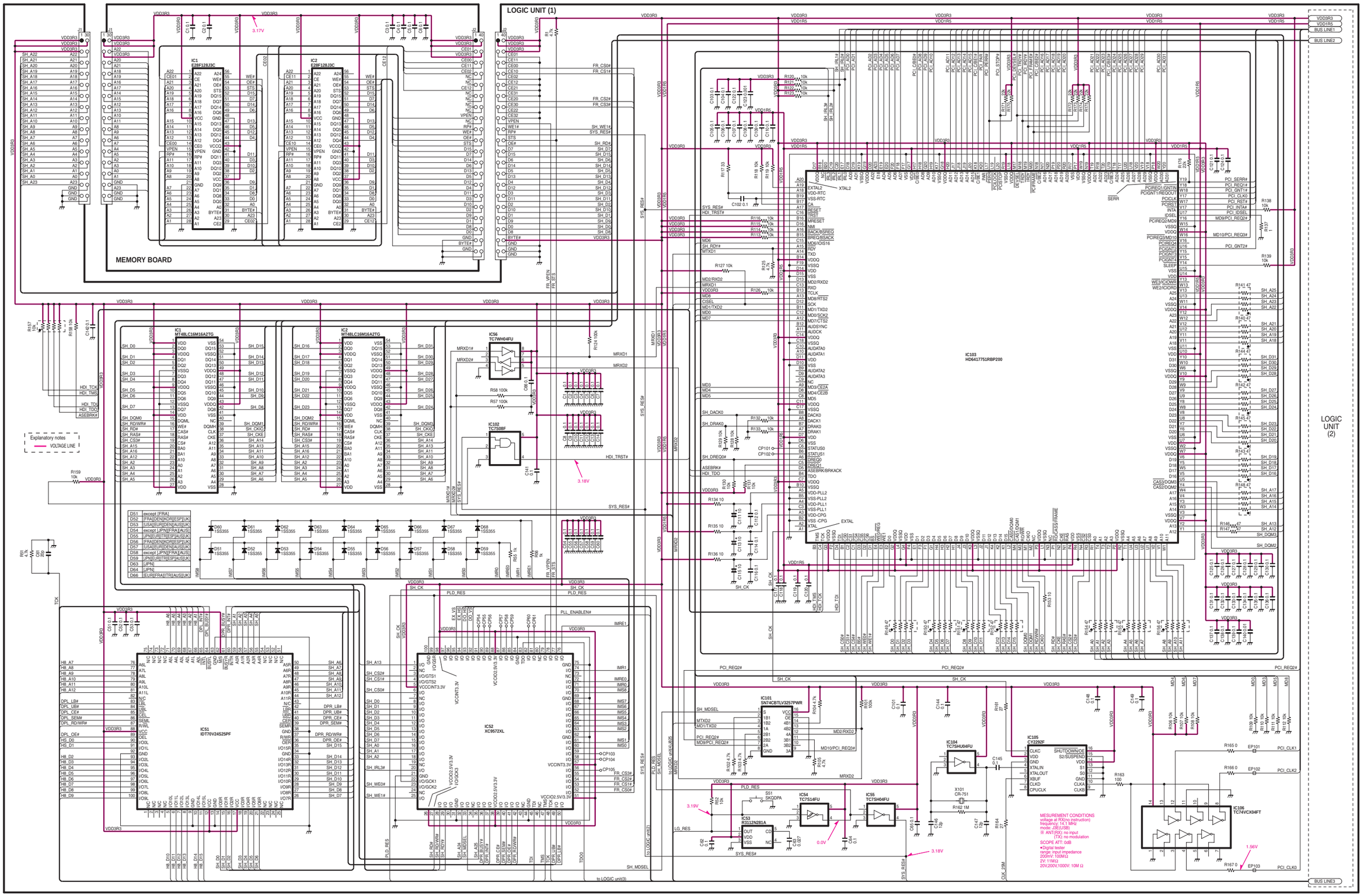

## LOGIC UNIT (2)

LOGIC UNIT (1)

LOGIC UNIT (3)

IC201 MT48LC16M16A2TG

IC202 MT48LC16M16A2TG

IC203 HD64404BT

IC204 ADV7123KST50

IC205 TC7SZ04F

IC206 SN74ACT04PWR

Explanatory notes
VOLTAGE LINE

LOGIC UNIT (3)

LOGIC UNIT (2)

LOGIC UNIT (4)

IC401 PCI1410APGE

IC404 RTL8139C+

IC604 HD64F2377VFQ33V

IC605 XC9572XL

IC207 TC7W04F

IC208 μPD16875G

IC209 AK5355VT

IC210 AK5355VT

IC211 AK4384VT

IC212 AK4384VT

IC402 TPS2211AIDBR

IC403 93R93LC46FW

IC603 BU9480F

IC610 Hn58X2464TI

IC601 TC7SH04FU

IC602 TC7SET04FU

MESUREMENT CONDITIONS
voltage at RX(no instruction) frequency: 14.1 MHz
mode: J2E(USB)
※ ANT(RX): no input
(TX): no modulation
SCOPE ATT: 0dB
•Digital tester
range: input impedance
200mV: 100MΩ
2V: 11MΩ
20V,200V,1000V: 10M Ω

Explanatory notes
VOLTAGE LINE

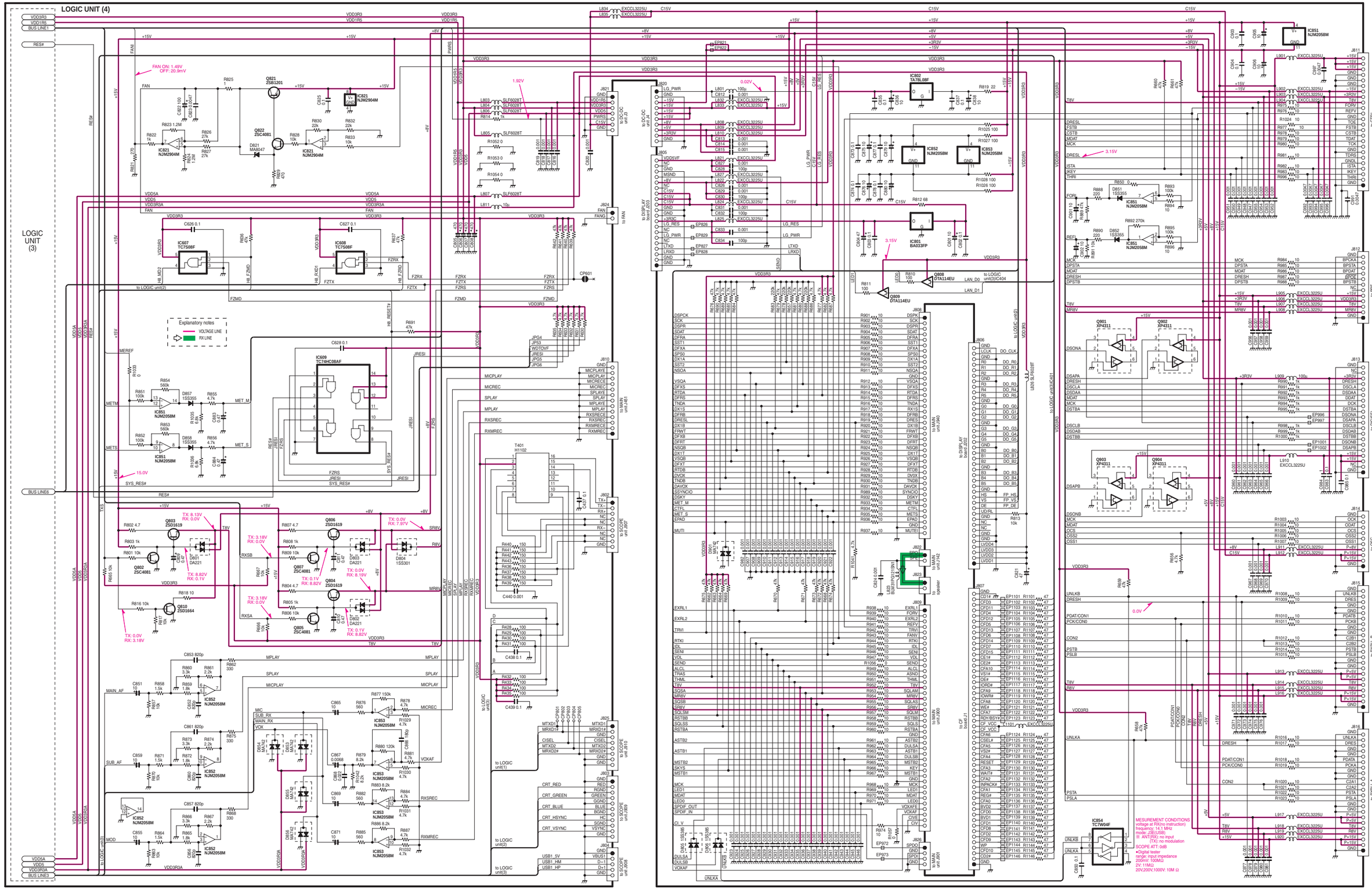
LOGIC UNIT (4)
LOGIC UNIT (3)
Explanatory notes
VOLTAGE LINE
RX LINE
FAN ON: 1.49V
OFF: 20.9mV
MESUREMENT CONDITIONS
voltage at RX(no instruction)
frequency: 14.1 MHz
mode: J3E(USB)
※ ANT(RX): no input
(TX): no modulation
SCOPE ATT: 0dB
•Digital tester
range: input impedance
200mV: 100MΩ
2V: 11MΩ
20V,200V,1000V: 10M Ω

# 11-17 MAIN UNIT

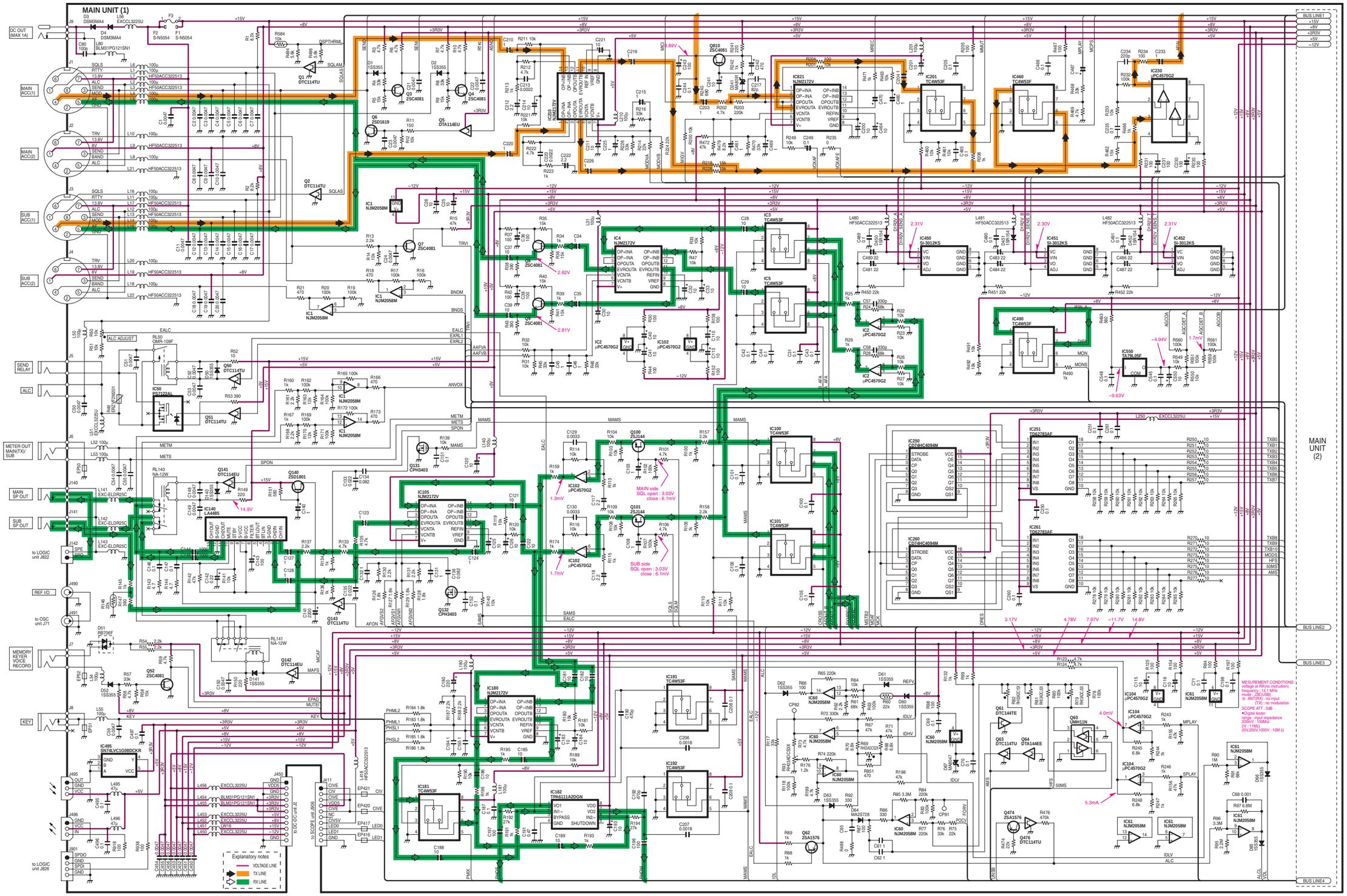

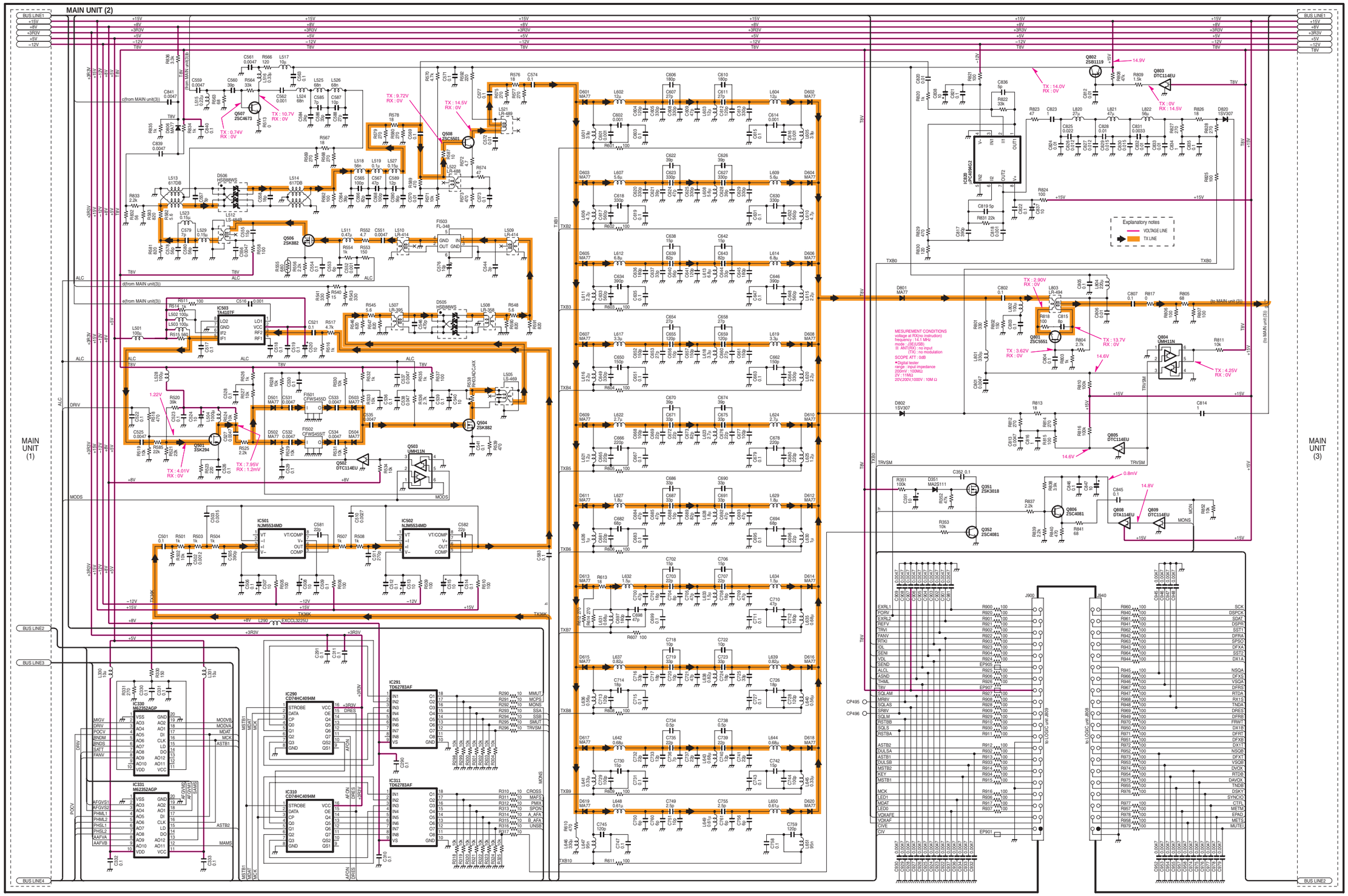
MAIN UNIT (2)
MAIN UNIT (1)
MAIN UNIT (3)
BUS LINE1
BUS LINE2
BUS LINE3
BUS LINE4
Explanatory notes
VOLTAGE LINE
TX LINE
MESUREMENT CONDITIONS
voltage at RX(no instruction)
frequency : 14.1 MHz
mode : J3E(USB)
® ANT(RX) : no input
(TX) : no modulation
SCOPE ATT : 0dB
•Digital tester
range : input impedance
200mV : 10MΩ
2V : 11MΩ
20V,200V,1000V : 10M Ω
IC330 M62352AGP
IC331 M62352AGP
IC501 NJM5534MD
IC502 NJM5534MD
IC290 CD74HC4094M
IC310 CD74HC4094M
IC291 TD62783AF
IC311 TD62783AF
IC503 TA4107F
IC26 IPC408G2
Q506 2SK882
Q507 2SC4673
Q508 2SC5501
Q501 3SK294
Q502 DTC114EU
Q503 UMH11N
Q504 2SK882
Q801 2SC5551
Q802 2SB1119
Q803 DTC114EU
Q804 UMH11N
Q805 DTC114EU
Q806 2SC4081
Q808 DTA114EU
Q809 DTC114EU
Q351 2SK3018
Q352 2SC4081
TX : 10.7V RX : 0V
TX : 0.74V RX : 0V
TX : 9.72V RX : 0V
TX : 14.5V RX : 0V
TX : 4.01V RX : 0V
TX : 7.95V RX : 1.0mV
TX : 14.0V RX : 0V
TX : 2.90V RX : 0V
TX : 3.62V RX : 0V
TX : 13.7V RX : 0V
TX : 4.25V RX : 0V
TX : -0V RX : 14.5V
14.9V
14.6V
14.8V
0.8mV
1.22V
(from MAIN unit(3))
(to MAIN unit (3))
(to MAIN unit (3))
to LOGIC unit J808
to LOGIC unit J809
to LOGIC unit J803
to LOGIC unit J804
to LOGIC unit J805
to LOGIC unit J806
to LOGIC unit J807
to LOGIC unit J808
to LOGIC unit J809
to LOGIC unit J810
to LOGIC unit J811
to LOGIC unit J812
to LOGIC unit J813
to LOGIC unit J814
to LOGIC unit J815
to LOGIC unit J816
to LOGIC unit J817
to LOGIC unit J818
to LOGIC unit J819
to LOGIC unit J820
to LOGIC unit J821
to LOGIC unit J822
to LOGIC unit J823
to LOGIC unit J824
to LOGIC unit J825
to LOGIC unit J826
to LOGIC unit J827
to LOGIC unit J828
to LOGIC unit J829
to LOGIC unit J830
to LOGIC unit J831
to LOGIC unit J832
to LOGIC unit J833
to LOGIC unit J834
to LOGIC unit J835
to LOGIC unit J836
to LOGIC unit J837
to LOGIC unit J838
to LOGIC unit J839
to LOGIC unit J840
to LOGIC unit J841
to LOGIC unit J842
to LOGIC unit J843
to LOGIC unit J844
to LOGIC unit J845
to LOGIC unit J846
to LOGIC unit J847
to LOGIC unit J848
to LOGIC unit J849
to LOGIC unit J850
to LOGIC unit J851
to LOGIC unit J852
to LOGIC unit J853
to LOGIC unit J854
to LOGIC unit J855
to LOGIC unit J856
to LOGIC unit J857
to LOGIC unit J858
to LOGIC unit J859
to LOGIC unit J860
to LOGIC unit J861
to LOGIC unit J862
to LOGIC unit J863
to LOGIC unit J864
to LOGIC unit J865
to LOGIC unit J866
to LOGIC unit J867
to LOGIC unit J868
to LOGIC unit J869
to LOGIC unit J870
to LOGIC unit J871
to LOGIC unit J872
to LOGIC unit J873
to LOGIC unit J874
to LOGIC unit J875
to LOGIC unit J876
to LOGIC unit J877
to LOGIC unit J878
to LOGIC unit J879
to LOGIC unit J880
to LOGIC unit J881
to LOGIC unit J882
to LOGIC unit J883
to LOGIC unit J884
to LOGIC unit J885
to LOGIC unit J886
to LOGIC unit J887
to LOGIC unit J888
to LOGIC unit J889
to LOGIC unit J890
to LOGIC unit J891
to LOGIC unit J892
to LOGIC unit J893
to LOGIC unit J894
to LOGIC unit J895
to LOGIC unit J896
to LOGIC unit J897
to LOGIC unit J898
to LOGIC unit J899
to LOGIC unit J900
to LOGIC unit J901
to LOGIC unit J902
to LOGIC unit J903
to LOGIC unit J904
to LOGIC unit J905
to LOGIC unit J906
to LOGIC unit J907
to LOGIC unit J908
to LOGIC unit J909
to LOGIC unit J910
to LOGIC unit J911
to LOGIC unit J912
to LOGIC unit J913
to LOGIC unit J914
to LOGIC unit J915
to LOGIC unit J916
to LOGIC unit J917
to LOGIC unit J918
to LOGIC unit J919
to LOGIC unit J920
to LOGIC unit J921
to LOGIC unit J922
to LOGIC unit J923
to LOGIC unit J924
to LOGIC unit J925
to LOGIC unit J926
to LOGIC unit J927
to LOGIC unit J928
to LOGIC unit J929
to LOGIC unit J930
to LOGIC unit J931
to LOGIC unit J932
to LOGIC unit J933
to LOGIC unit J934
to LOGIC unit J935
to LOGIC unit J936
to LOGIC unit J937
to LOGIC unit J938
to LOGIC unit J939
to LOGIC unit J940
to LOGIC unit J941
to LOGIC unit J942
to LOGIC unit J943
to LOGIC unit J944
to LOGIC unit J945
to LOGIC unit J946
to LOGIC unit J947
to LOGIC unit J948
to LOGIC unit J949
to LOGIC unit J950
to LOGIC unit J951
to LOGIC unit J952
to LOGIC unit J953
to LOGIC unit J954
to LOGIC unit J955
to LOGIC unit J956
to LOGIC unit J957
to LOGIC unit J958
to LOGIC unit J959
to LOGIC unit J960
to LOGIC unit J961
to LOGIC unit J962
to LOGIC unit J963
to LOGIC unit J964
to LOGIC unit J965
to LOGIC unit J966
to LOGIC unit J967
to LOGIC unit J968
to LOGIC unit J969
to LOGIC unit J970
to LOGIC unit J971
to LOGIC unit J972
to LOGIC unit J973
to LOGIC unit J974
to LOGIC unit J975
to LOGIC unit J976
to LOGIC unit J977
to LOGIC unit J978
to LOGIC unit J979
to LOGIC unit J980
to LOGIC unit J981
to LOGIC unit J982
to LOGIC unit J983
to LOGIC unit J984
to LOGIC unit J985
to LOGIC unit J986
to LOGIC unit J987
to LOGIC unit J988
to LOGIC unit J989
to LOGIC unit J990
to LOGIC unit J991
to LOGIC unit J992
to LOGIC unit J993
to LOGIC unit J994
to LOGIC unit J995
to LOGIC unit J996
to LOGIC unit J997
to LOGIC unit J998
to LOGIC unit J999
to LOGIC unit J1000

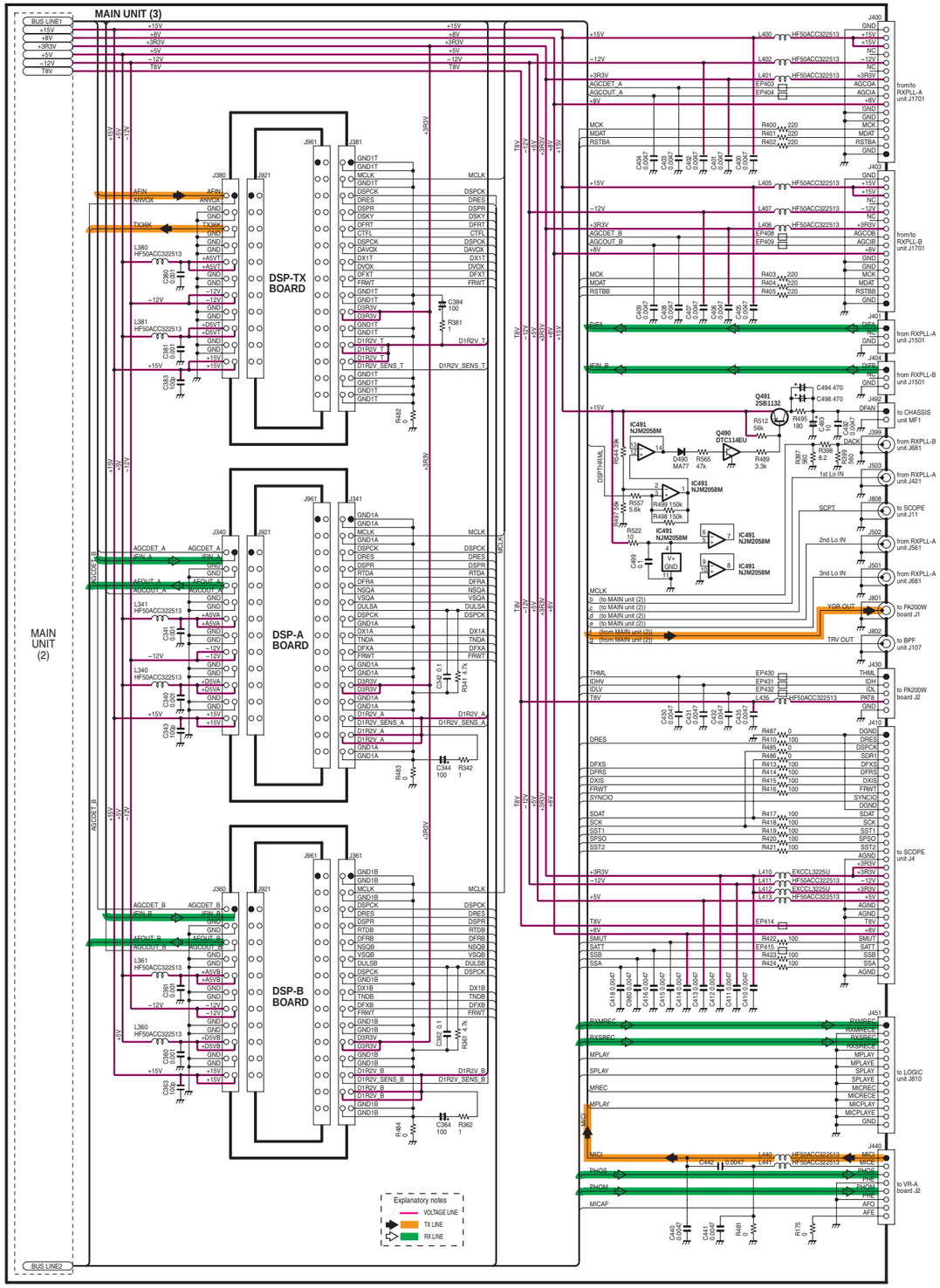
MAIN UNIT (3)
BUS LINE1
+15V
+8V
+3R3V
+5V
−12V
T8V
DSP-TX BOARD
DSP-A BOARD
DSP-B BOARD
J961
J381
J341
J361
J380
J340
J360
J921
AFIN
ANVOX
TX36K
L380
L381
L341
L361
L340
L360
HF50ACC322513
C380
C381
C383
C341
C343
C361
C363
C340
C360
0.001
100
+5VT
+5VA
+5VB
D1R2V_T
D1R2V_SENS_T
D1R2V_A
D1R2V_SENS_A
D1R2V_B
D1R2V_SENS_B
R381
R482
R483
R484
C384
C344
C364
R342
R362
C343
C363
0.1
R341
R361
4.7k
AGCDET_A
AGCDET_B
AFIN_A
AFIN_B
AFOUT_A
AFOUT_B
MCLK
DSPCK
DRES
DSPR
DSKY
DFRT
CTRL
DAVOX
DX1T
DVOX
DFXT
FRWT
GND1T
D3R3V
D1R2V_T
D1R2V_SENS_T
GND1A
DX1A
TNDA
DFXA
D3R3V
D1R2V_A
D1R2V_SENS_A
GND1B
DX1B
TNDB
DFXB
D3R3V
D1R2V_B
D1R2V_SENS_B
MAIN UNIT (2)
BUS LINE2
Explanatory notes
VOLTAGE LINE
TX LINE
RX LINE
J400
J403
J401
J404
J492
J399
J503
J421
J808
J509
J561
J501
J681
J801
J802
J107
J430
J410
J4
J451
J810
J440
J175
to/from RXPLL-A unit J1701
to/from RXPLL-B unit J1701
from RXPLL-A unit J1501
from RXPLL-B unit J1501
to CHASSIS unit MF1
from RXPLL-B unit J681
from RXPLL-A unit J421
to SCOPE unit J11
from RXPLL-A unit J561
from RXPLL-A unit J681
to PA200W board J1
to BPF unit J107
to PA200W board J2
to SCOPE unit J4
to LOGIC unit J810
to VR-A board J2
L400
L401
L402
L403
L405
L406
L407
L408
L410
L411
L412
L413
L435
L440
L441
HF50ACC322513
EXCCL3225U
EP403
EP404
EP408
EP409
EP414
EP415
EP430
EP431
EP432
R400
R401
R402
R403
R404
R405
R410
R417
R418
R419
R420
R421
R422
R423
R424
R482
R485
R486
R487
R488
R489
R490
R491
R492
R493
R494
R495
R496
R497
R498
R512
R522
R557
R565
C404
C405
C406
C407
C408
C409
C410
C411
C412
C413
C414
C415
C416
C417
C418
C419
C420
C421
C422
C423
C424
C425
C426
C427
C428
C429
C430
C431
C432
C435
C440
C441
C442
C483
C484
C485
C486
C487
C488
C489
C490
C491
C492
C493
C494
C495
C496
C497
C498
0.0047
470
180
8.2
150k
47k
3.3k
56k
7.5k
6.8k
4.99k
10
Q490
DTC114EU
Q491
2SB1132
IC491
NJM2058M
D490
MA77
DSPTHRML
MCLK
MDAT
RSTBA
RSTBB
DIFA
DIFB
DFAN
DACK
SCPT
2nd Lo IN
3rd Lo IN
XGR OUT
TRV OUT
THML
IDHV
IDLV
T8V
DRES
DFXS
DFRS
DXIS
FRWT
SYNCIO
SDAT
SCK
SST1
SPSO
SST2
+3R3V
−12V
+5V
+8V
SMUT
SATT
SSB
SSA
RXMREC
RXSREC
MPLAY
SPLAY
MREC
MICAF
MICI
PHOS
PHOM
AGCDET_A
AGCDET_B
AGCOUT_A
AGCOUT_B
MCK
MDAT
RSTBA
RSTBB
DIFA
DIFB
AFIN_B
MCK1
MCK2
a (to MAIN unit (2))
b (to MAIN unit (2))
c (to MAIN unit (2))
d (to MAIN unit (2))
e (to MAIN unit (2))
f (from MAIN unit (2))
g (from MAIN unit (2))

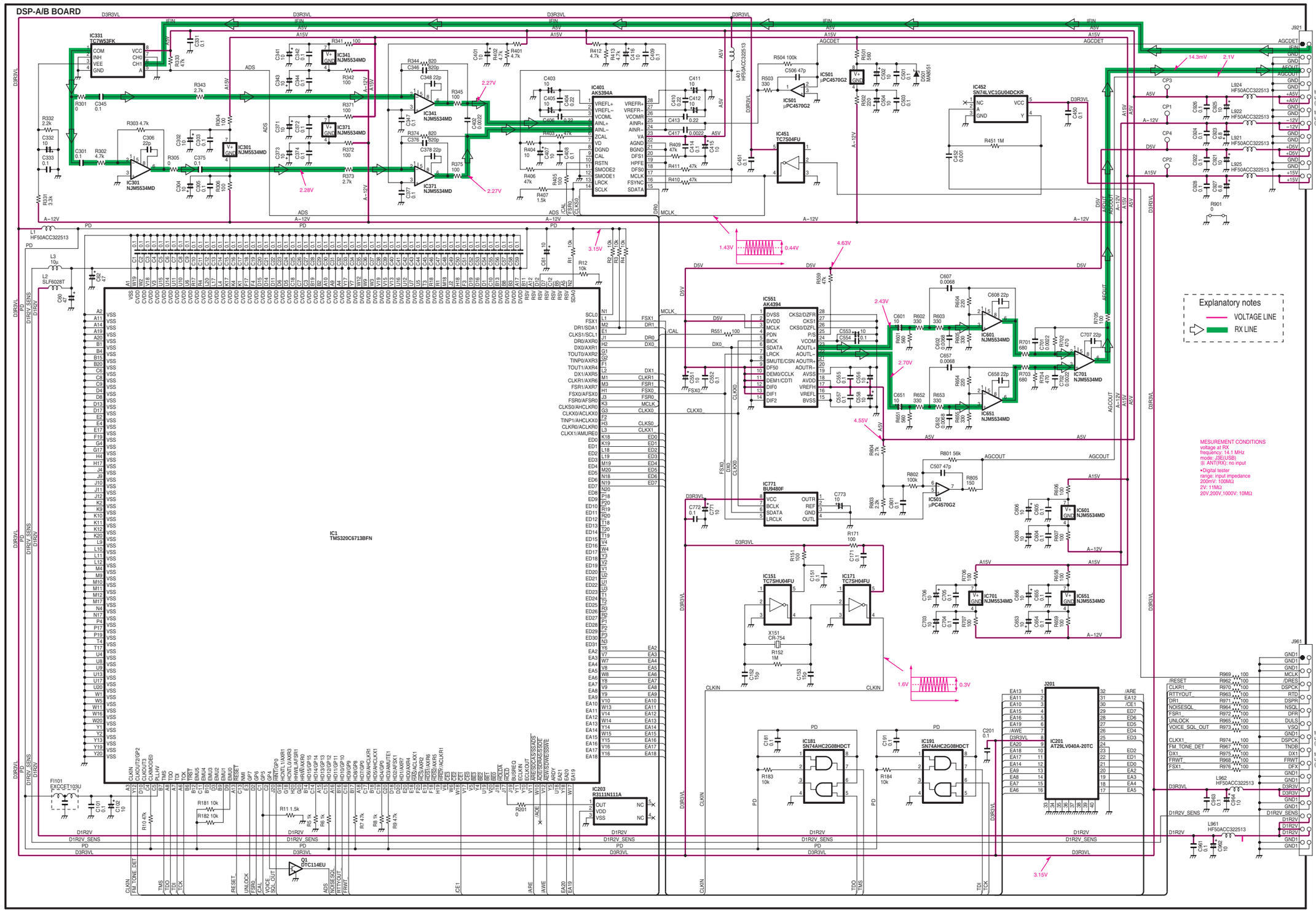
DSP-A/B BOARD
IC1
TMS320C6713BFN
IC203
R3111N111A
IC331
TC7W53FK
IC341
NJM5534MD
IC371
NJM5534MD
IC301
NJM5534MD
IC401
AK5394A
IC451
TC7S04FU
IC501
μPC4570G2
IC452
SN74LVC1GU04DCKR
IC551
AK4394
IC771
BU9480F
IC151
TC7SHU04FU
IC171
TC7SH04FU
IC181
SN74AHC2G08HDCT
IC191
SN74AHC2G08HDCT
IC201
AT29LV040A-20TC
IC601
NJM5534MD
IC701
NJM5534MD
IC651
NJM5534MD
IC501
NJM5534MD
IC701
NJM5534MD
IC551
NJM5534MD
Q1
DTC114EU
X151
CR-754
FI101
EXCCET103U
L1
HF50ACC322513
L2
SLF6028T
L3
10μ
L40
HF50ACC322513
L921
HF50ACC322513
L922
HF50ACC322513
L924
HF50ACC322513
L925
HF50ACC322513
L961
HF50ACC322513
L962
HF50ACC322513
J201
J921
J961
D501
MA8051
Explanatory notes
VOLTAGE LINE
RX LINE
MESUREMENT CONDITIONS
voltage at RX
frequency: 14.1 MHz
mode: USE(USB)
※ ANT(RX): no input
• Digital tester
range: input impedance
200mV: 100MΩ
2V: 11MΩ
20V,200V,1000V: 10MΩ
to MAIN unit J340 (DSP-A)
to MAIN unit J360 (DSP-B)
to MAIN unit J341 (DSP-A)
to MAIN unit J361 (DSP-B)
D3R3VL
D1R2V
A5V
A15V
A−12V
AGCDET
AGCOUT
ADS
PD
MCLK
CLKIN
TMS
TDO
TDI
TCK
/RESET
UNLOCK
/CAL
VOICE_SQL_OUT
/ACE
/ARE
/AWE
EA20
EA19
1.43V
0.44V
4.63V
2.43V
2.70V
4.55V
3.15V
2.27V
2.28V
14.3mV
2.1V
1.6V
0.3V

# 11-19 DSP-TX BOARD

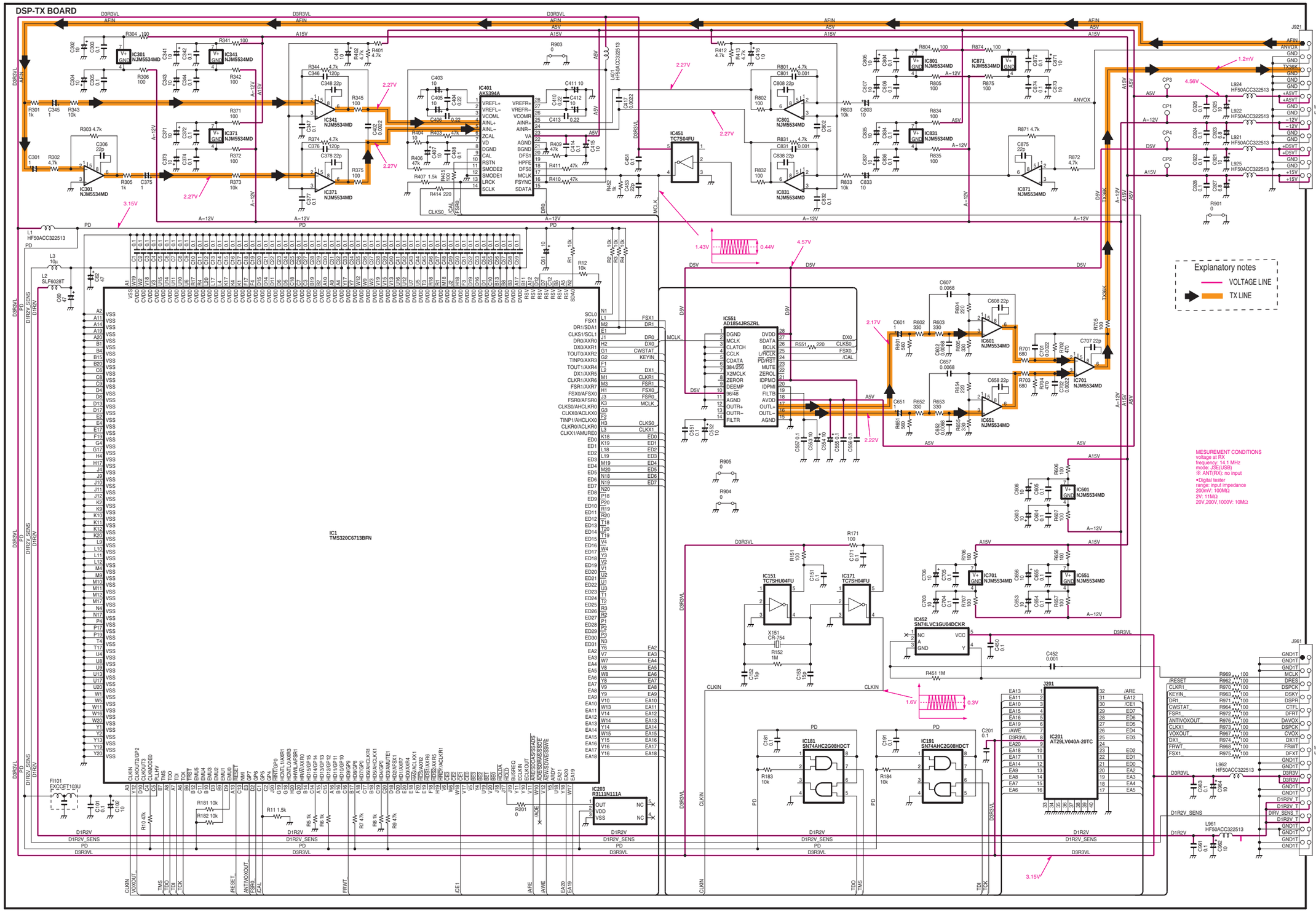

# 11-20 SCOPE UNIT

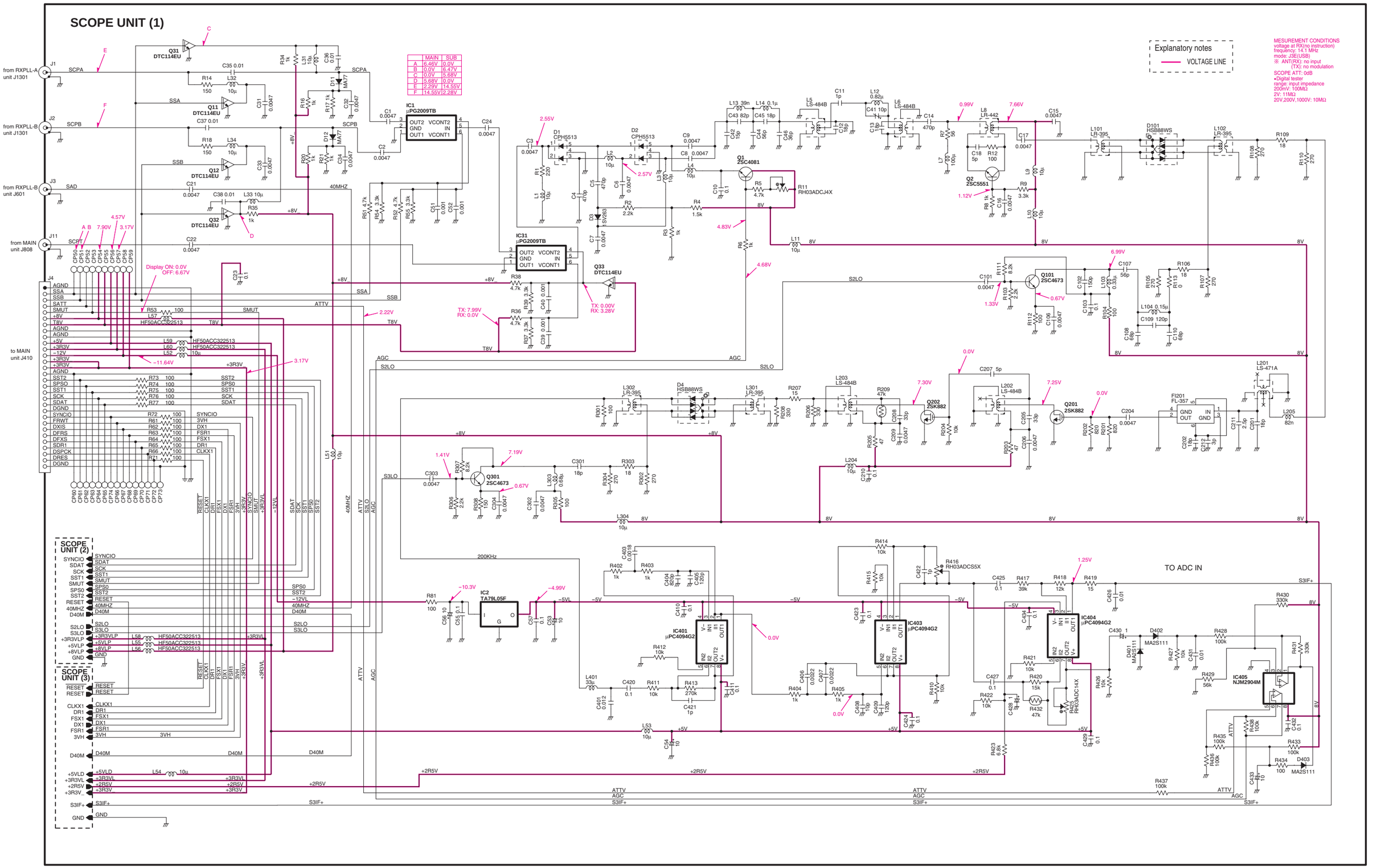

## SCOPE UNIT (2)

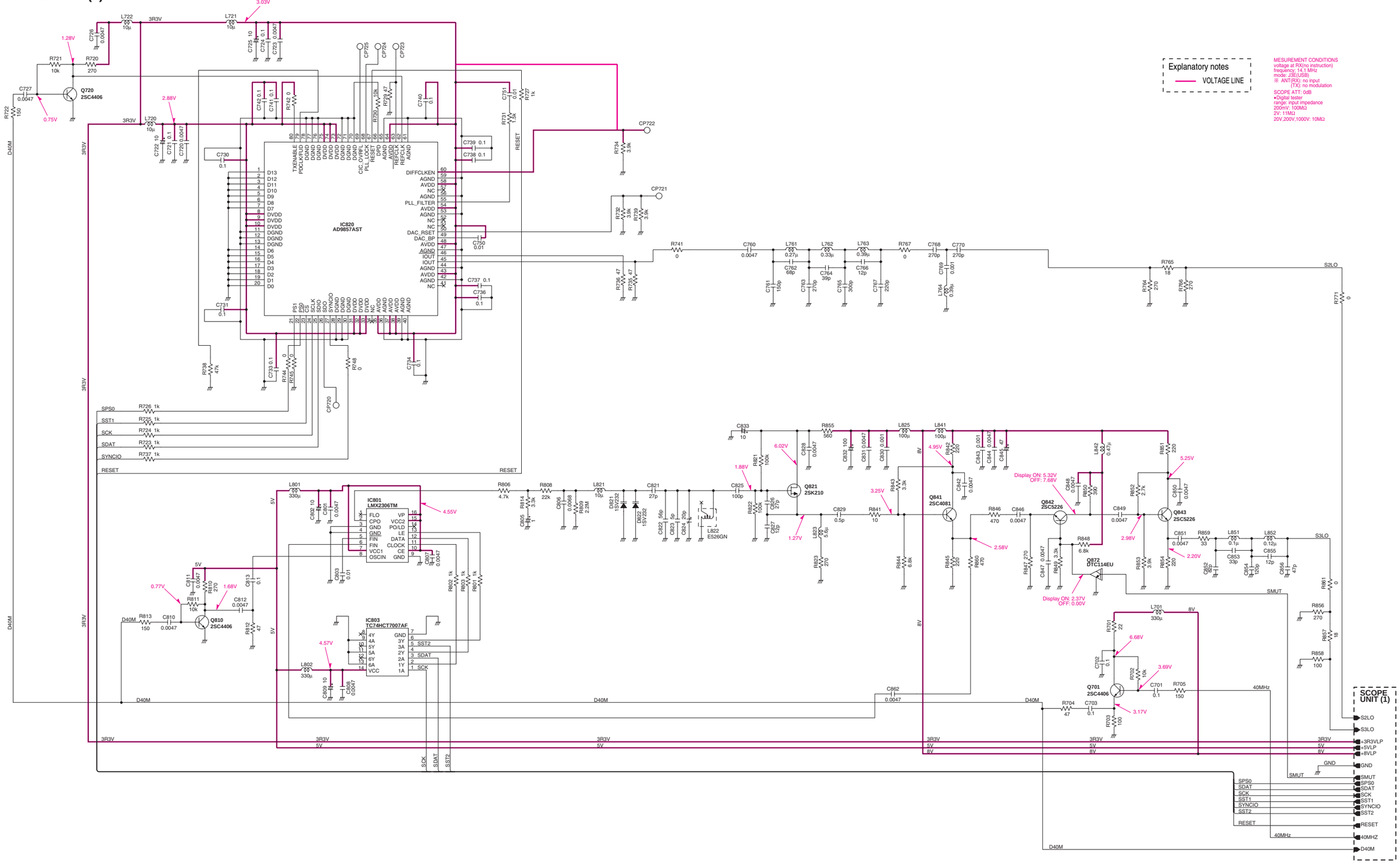
Explanatory notes
VOLTAGE LINE
MESUREMENT CONDITIONS
voltage at RX(no instruction)
frequency: 14.1 MHz
mode: J3E(USB)
※ ANT(RX): no input
(TX): no modulation
SCOPE ATT: 0dB
•Digital tester
range: input impedance
200mV: 100MΩ
2V: 11MΩ
20V,200V,1000V: 10MΩ
IC820
AD9857AST
IC801
LMX2306TM
IC803
TC74HCT7007AF
Q720
2SC4406
Q810
2SC4406
Q821
2SK210
Q841
2SC4081
Q842
2SC5226
Q843
2SC5226
Q872
DTC114EU
Q701
2SC4406
L822
E526GN
3.03V
2.88V
1.28V
0.75V
4.55V
4.57V
0.77V
1.68V
6.02V
1.88V
1.27V
3.25V
4.95V
2.58V
Display ON: 5.32V
OFF: 7.68V
5.25V
2.98V
2.20V
Display ON: 2.37V
OFF: 0.00V
6.68V
3.69V
3.17V
SCOPE UNIT (1)
S2LO
S3LO
+3R3VLP
+5VLP
+8VLP
GND
SMUT
SPS0
SDAT
SCK
SST1
SYNCIO
SST2
RESET
40MHZ
D40M

## SCOPE UNIT (3)

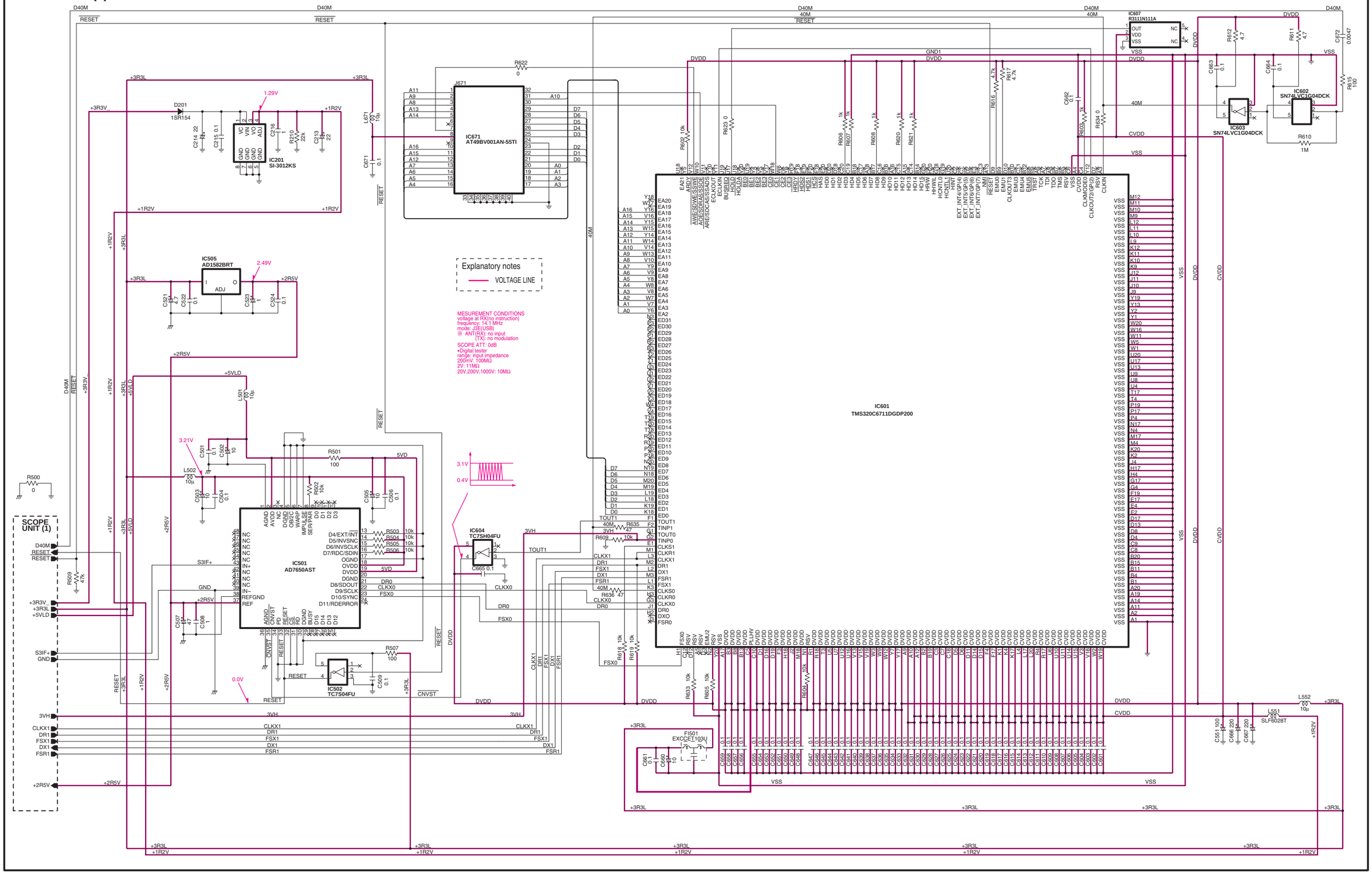
IC601
TMS320C6711DGDP200
IC501
AD7650AST
IC671
AT49BV001AN-55TI
IC505
AD1582BRT
IC201
SI-3012KS
IC602
SN74LVC1G04DCK
IC603
SN74LVC1G04DCK
IC604
TC7SH04FU
IC502
TC7S04FU
IC607
R2111N111A
Explanatory notes
VOLTAGE LINE
MESUREMENT CONDITIONS
voltage at RX(no instruction)
frequency: 14.1 MHz
mode: J3E(USB)
※ ANT(RX): no input
[TX]: no modulation
SCOPE ATT: 0dB
•Digital tester
range: input impedance
200mV: 100MΩ
2V: 11MΩ
20V,200V,1000V: 10MΩ
SCOPE UNIT (1)
1.29V
2.49V
3.21V
3.1V
0.4V
0.0V

## SCOPE UNIT (4)

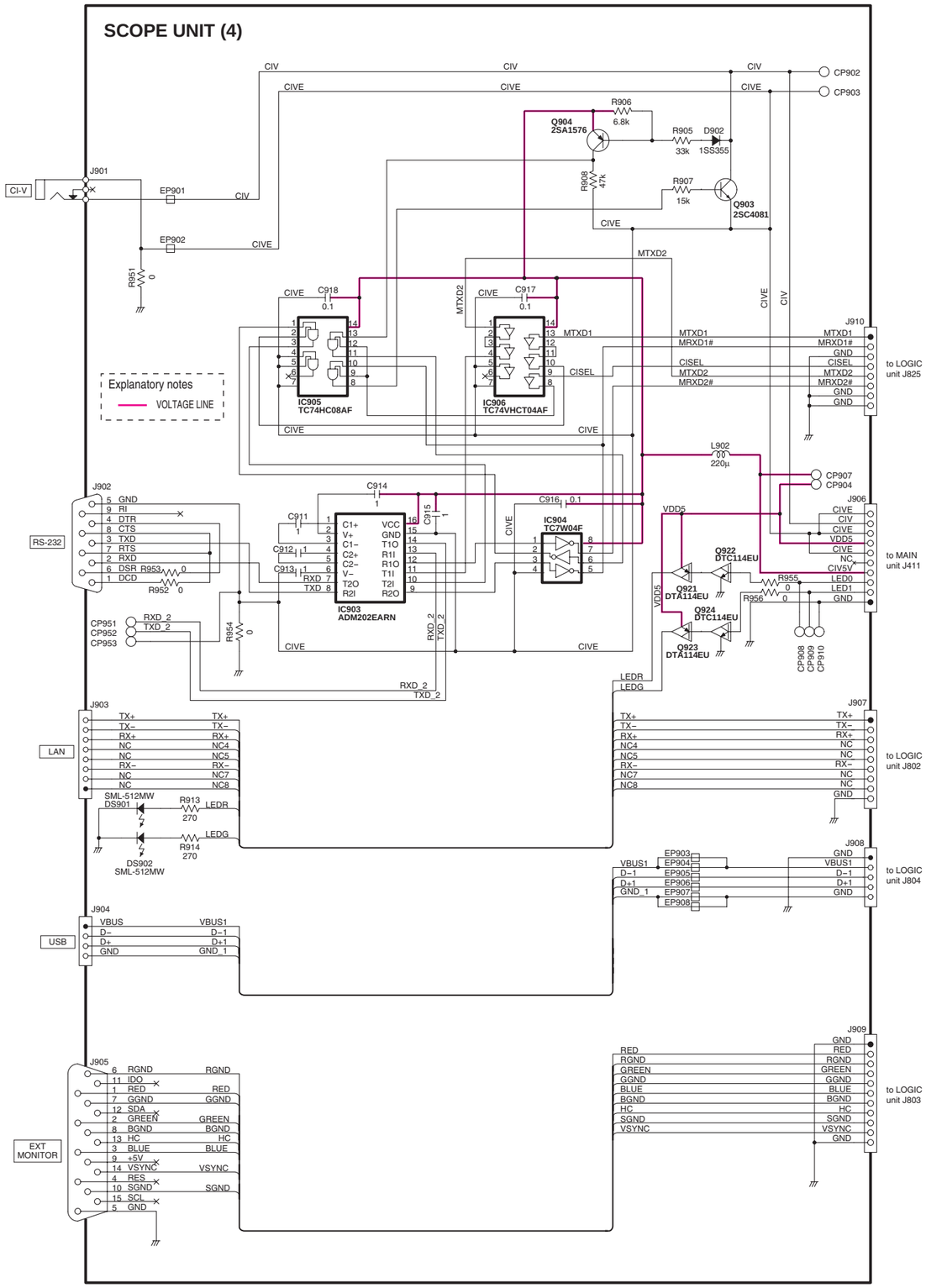

CI-V
J901
EP901
EP902
R951
0
CIV
CIVE
CP902
CP903
R906
6.8k
Q904
2SA1576
R905
33k
D902
1SS355
R908
47k
R907
15k
Q903
2SC4081
MTXD2
C918
0.1
C917
0.1
IC905
TC74HC08AF
IC906
TC74VHCT04AF
MTXD1
CISEL
J910
MTXD1
MRXD1#
GND
CISEL
MTXD2
MRXD2#
to LOGIC
unit J825
Explanatory notes
VOLTAGE LINE
L902
220µ
CP907
CP904
J902
RS-232
GND
RI
DTR
CTS
TXD
RTS
RXD
DSR
DCD
R953
R952
0
C914
1
C911
C912
C913
C915
C916
0.1
IC903
ADM202EARN
IC904
TC7W04F
VDD5
Q922
DTC114EU
Q921
DTA114EU
Q924
DTC114EU
Q923
DTA114EU
R955
R956
J906
CIVE
VDD5
NC
CIV5V
LED0
LED1
to MAIN
unit J411
CP908
CP909
CP910
CP951
CP952
CP953
RXD_2
TXD_2
R954
LEDR
LEDG
J903
LAN
TX+
TX−
RX+
NC
NC4
NC5
RX−
NC7
NC8
SML-512MW
DS901
R913
270
DS902
SML-512MW
R914
270
J907
to LOGIC
unit J802
J908
VBUS1
D−1
D+1
GND_1
EP903
EP904
EP905
EP906
EP907
EP908
to LOGIC
unit J804
J904
USB
VBUS
D−
D+
GND
J905
EXT
MONITOR
RGND
IDO
RED
GGND
SDA
GREEN
BGND
HC
BLUE
+5V
VSYNC
RES
SGND
SCL
J909
to LOGIC
unit J803

# 11-21 RXPLL-A/RXPLL-B UNITS

## RXPLL-A/B UNIT (1)

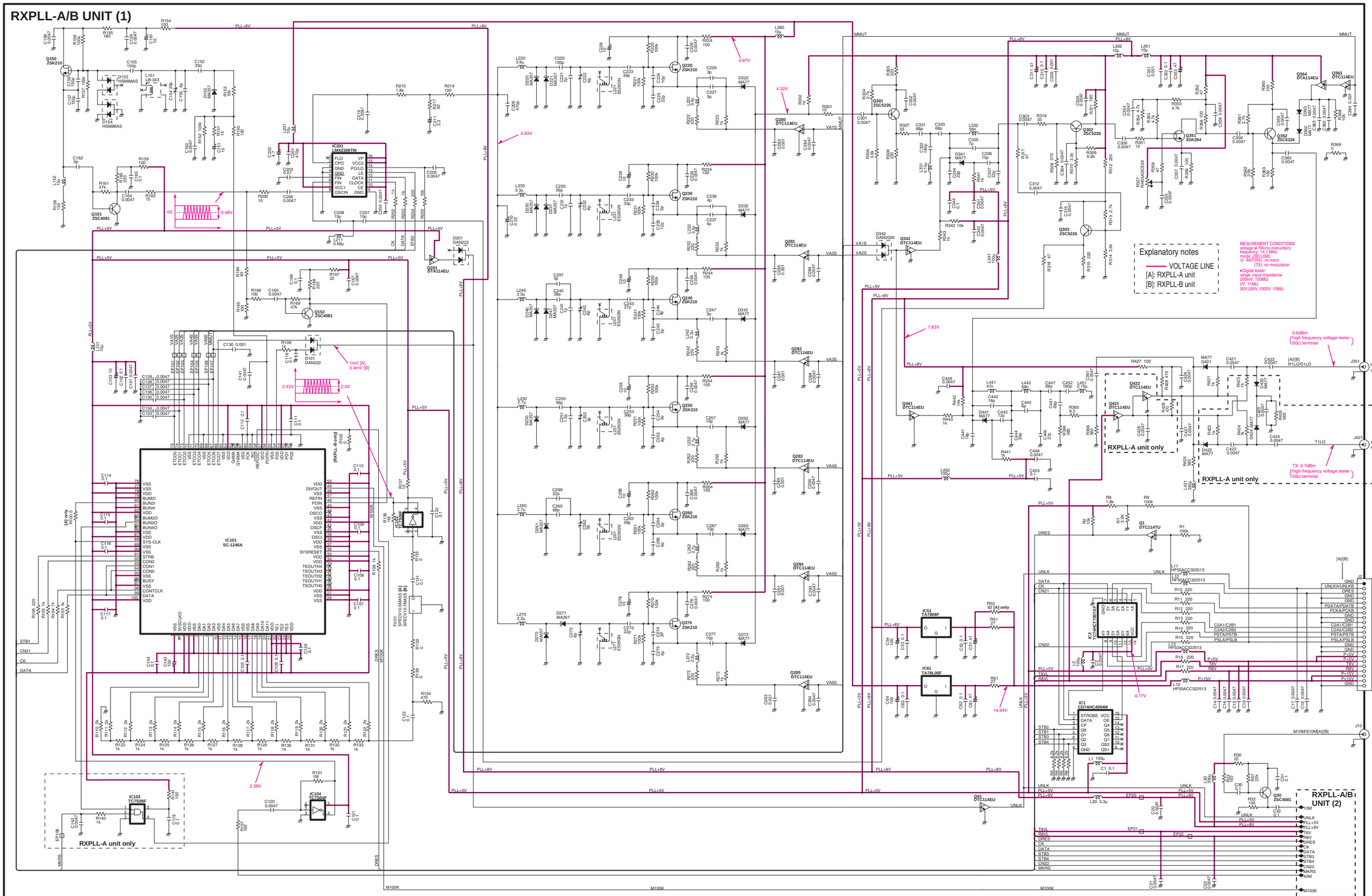

## RXPLL-A/B UNIT (2)

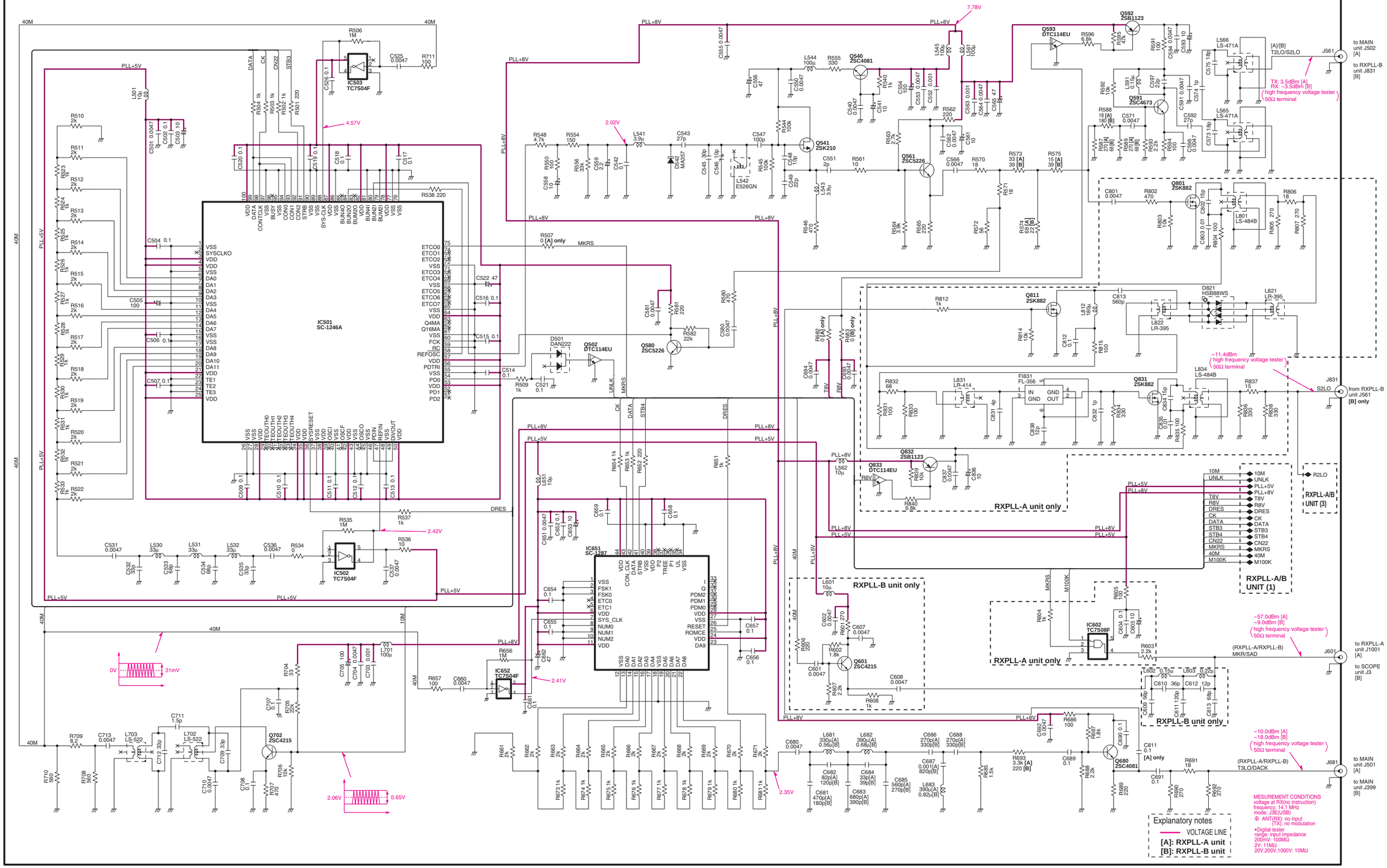

# RXPLL-A/B UNIT (3)

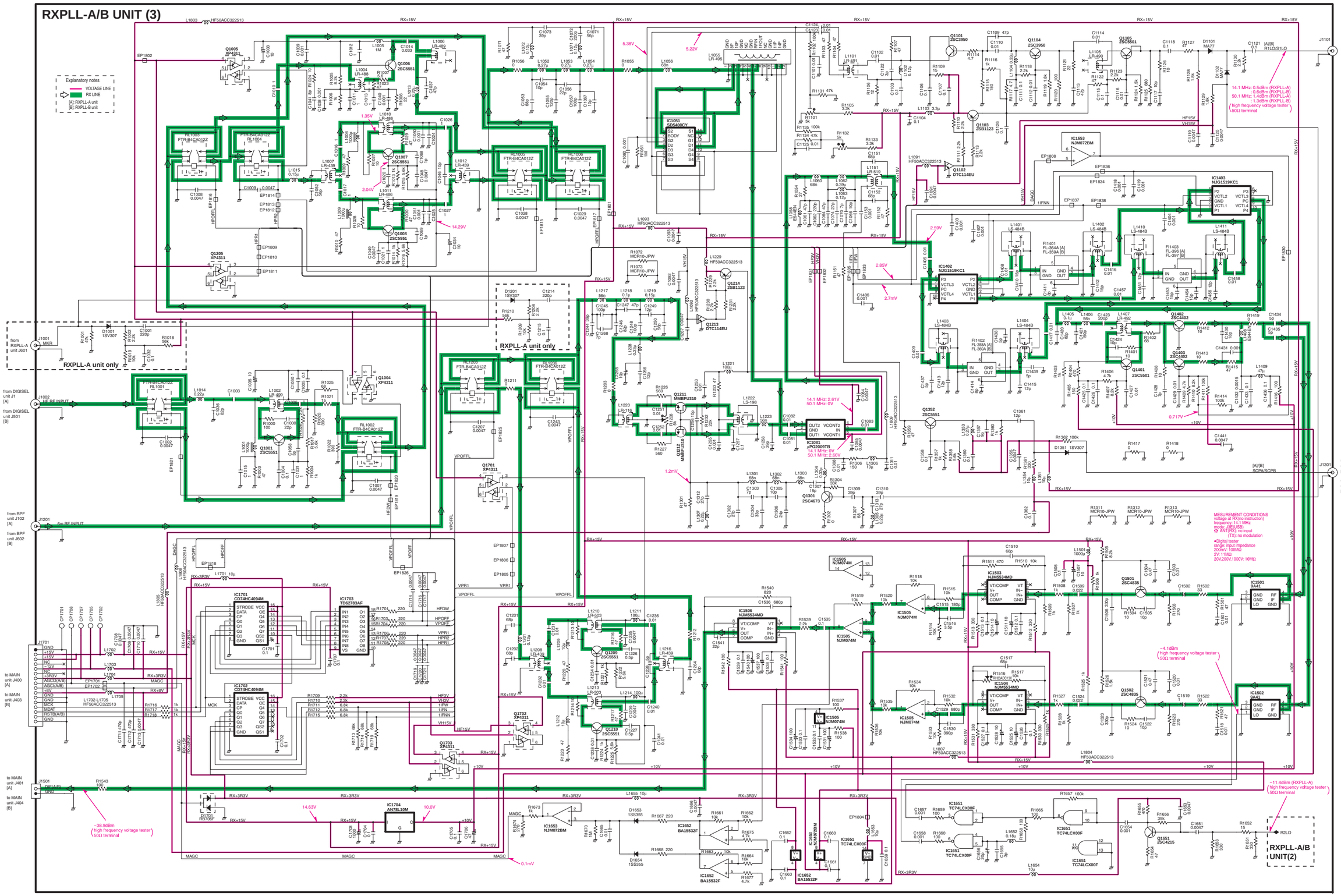

## DIGISEL UNIT (A)

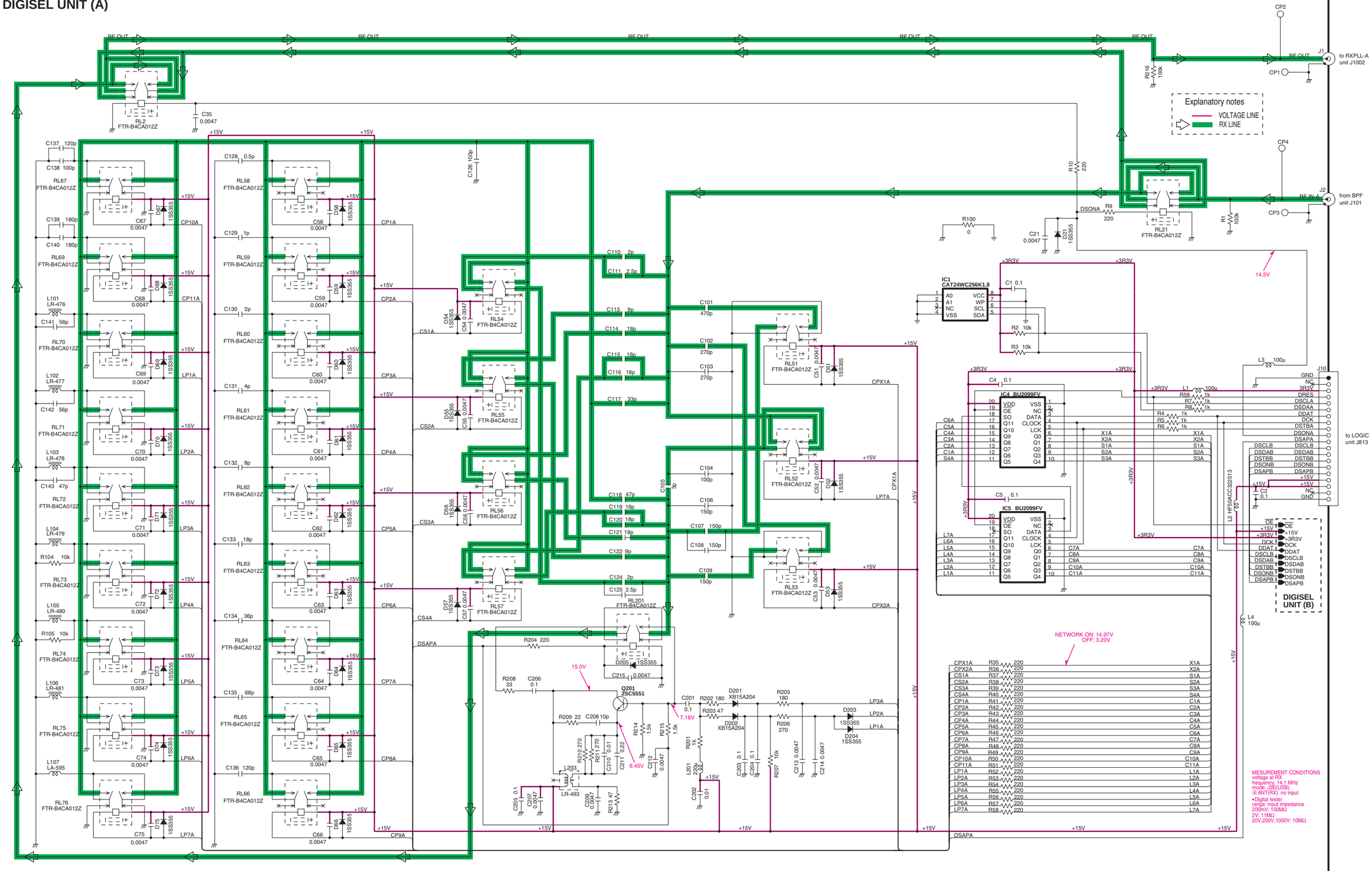

## DIGISEL UNIT (B)

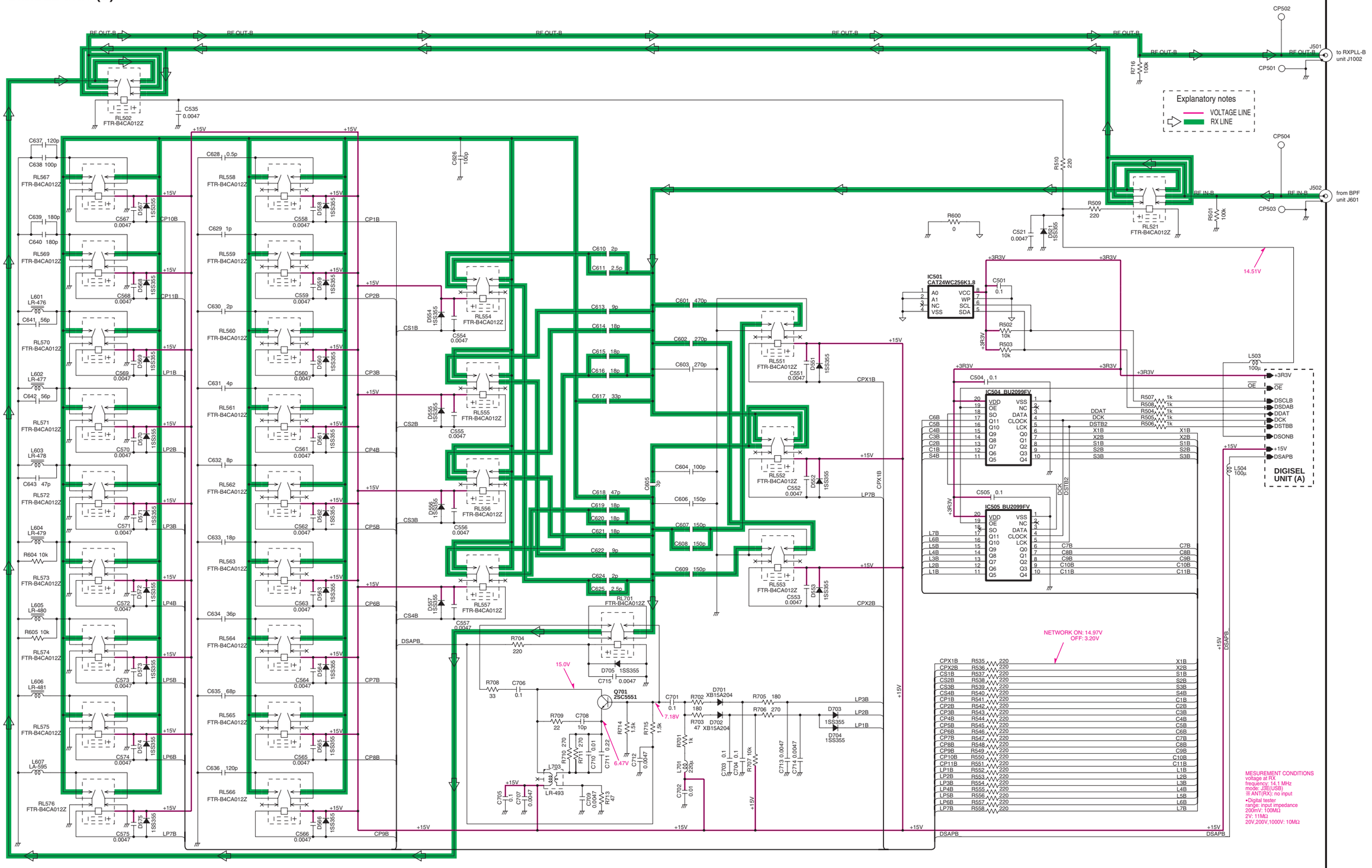

# 11-23 OSC UNIT

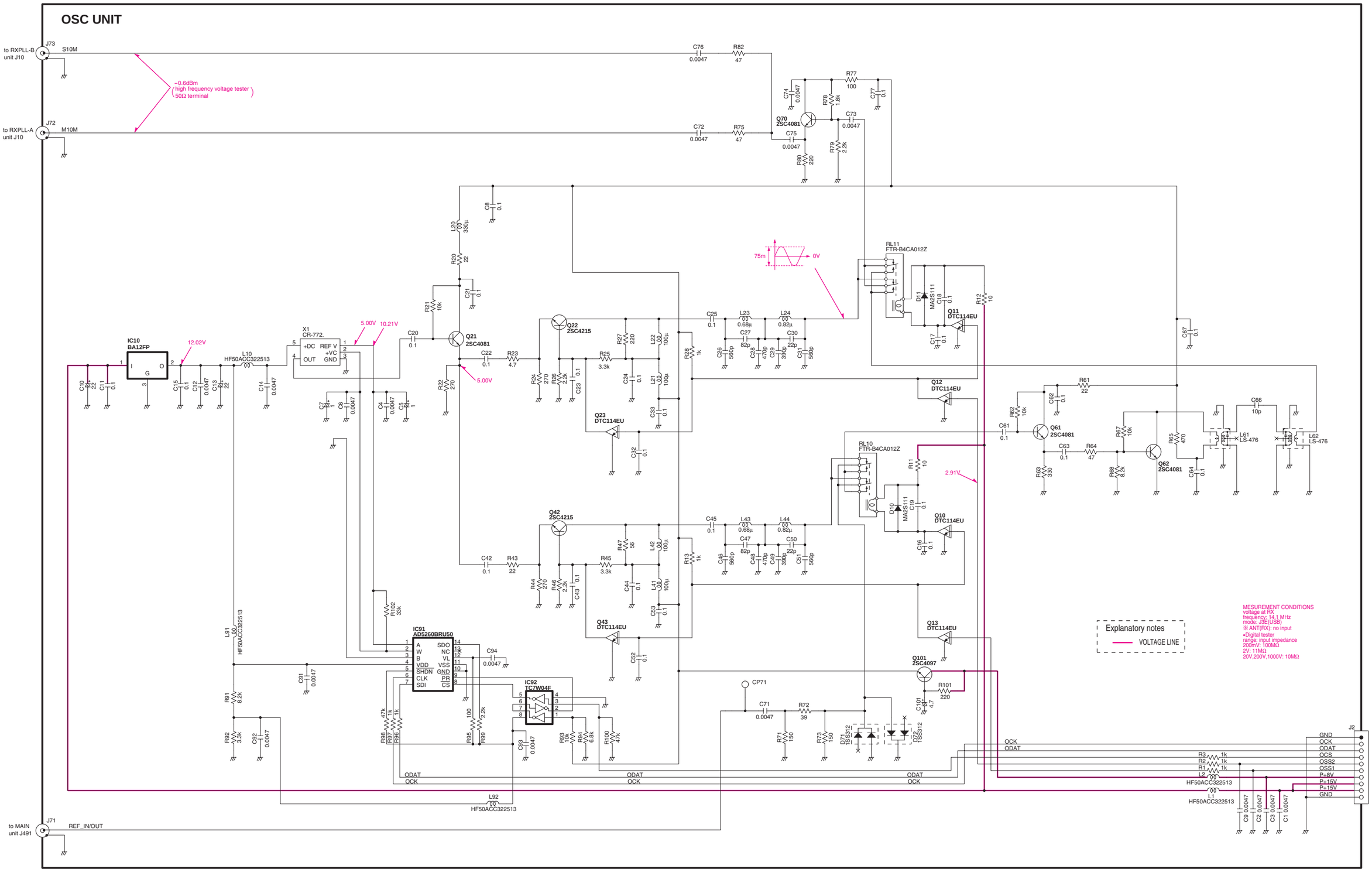

## 11-24 ANT-SW UNIT

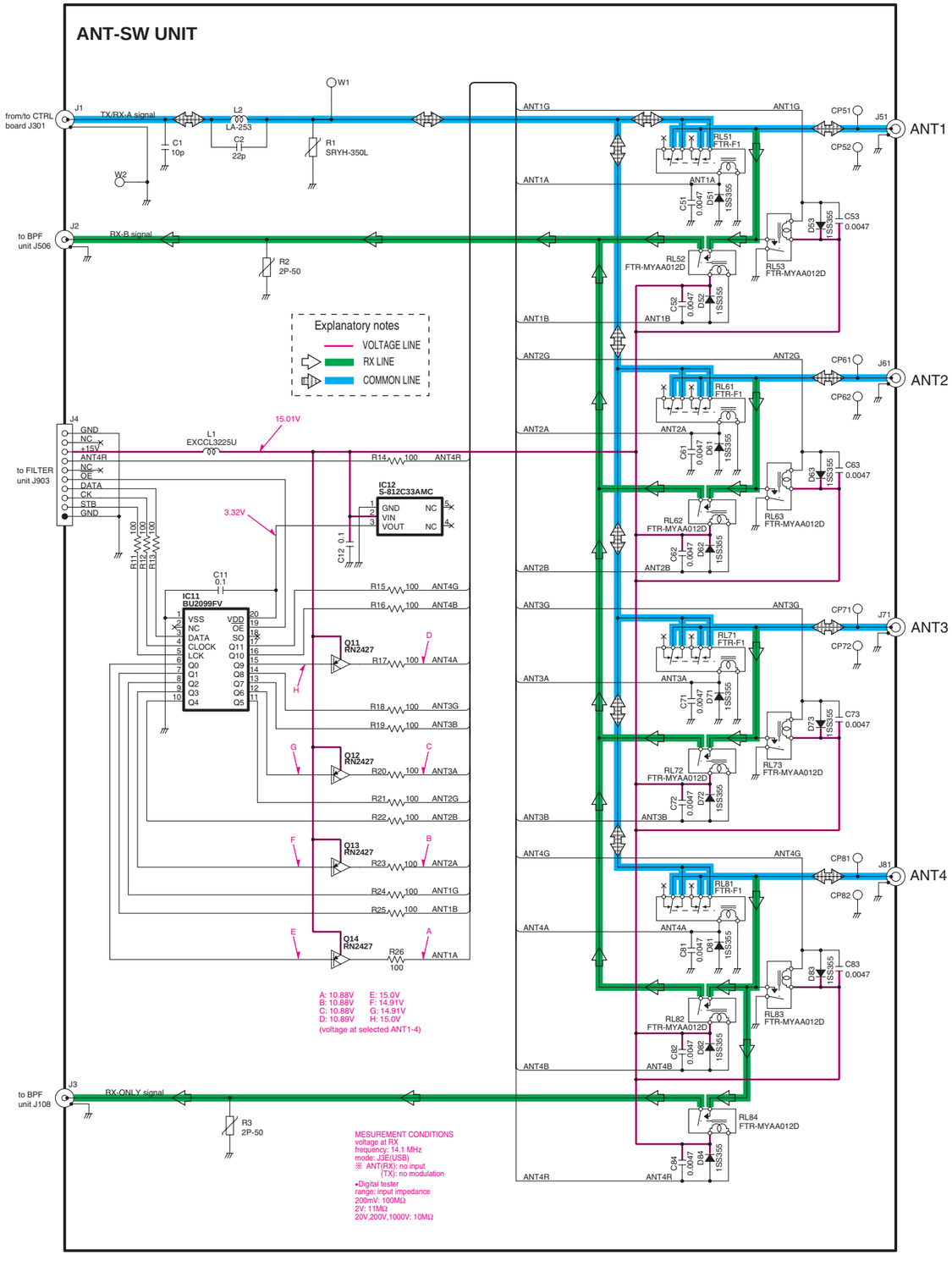


## 11-25 FILTER UNIT

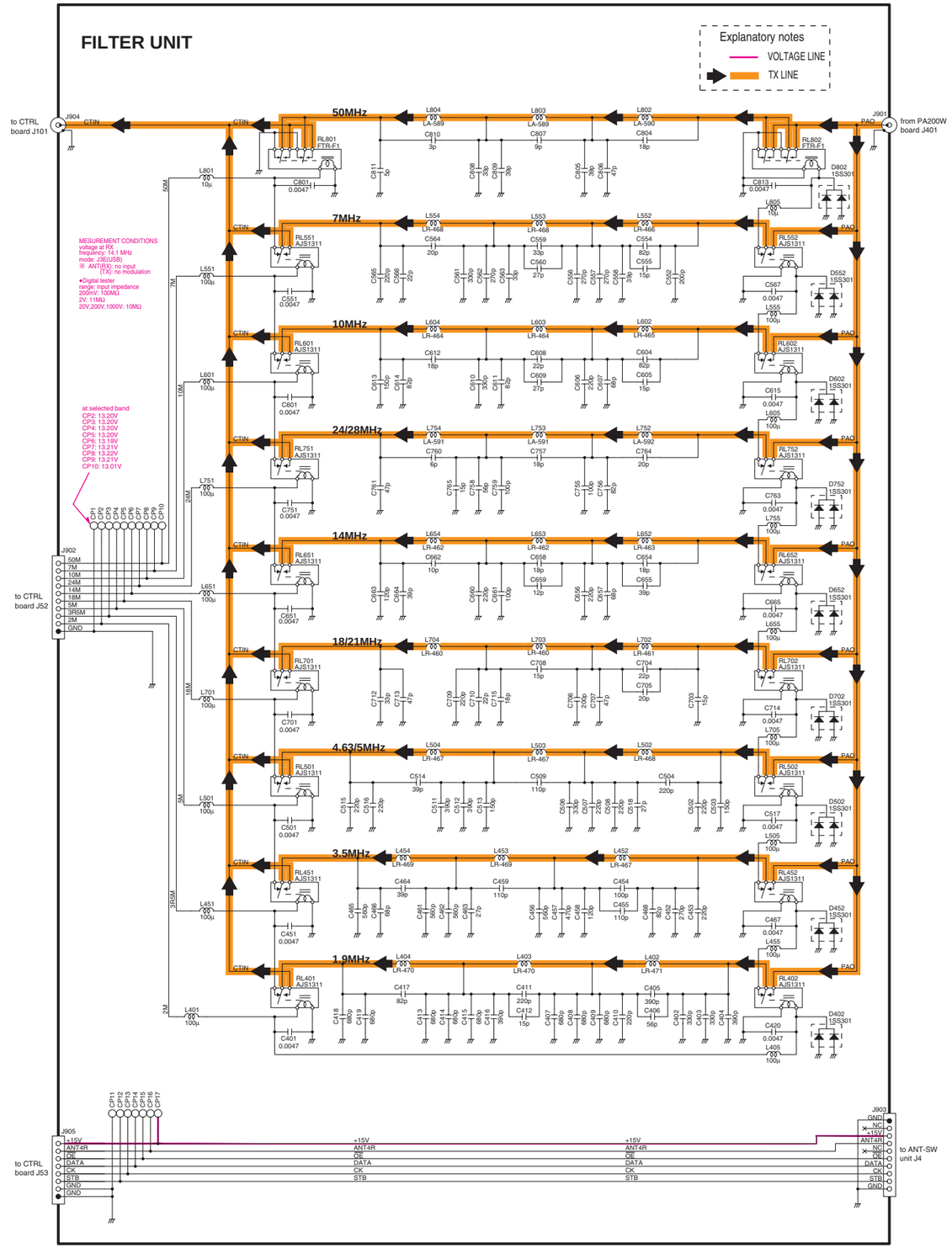

# 11-26 BPF UNIT

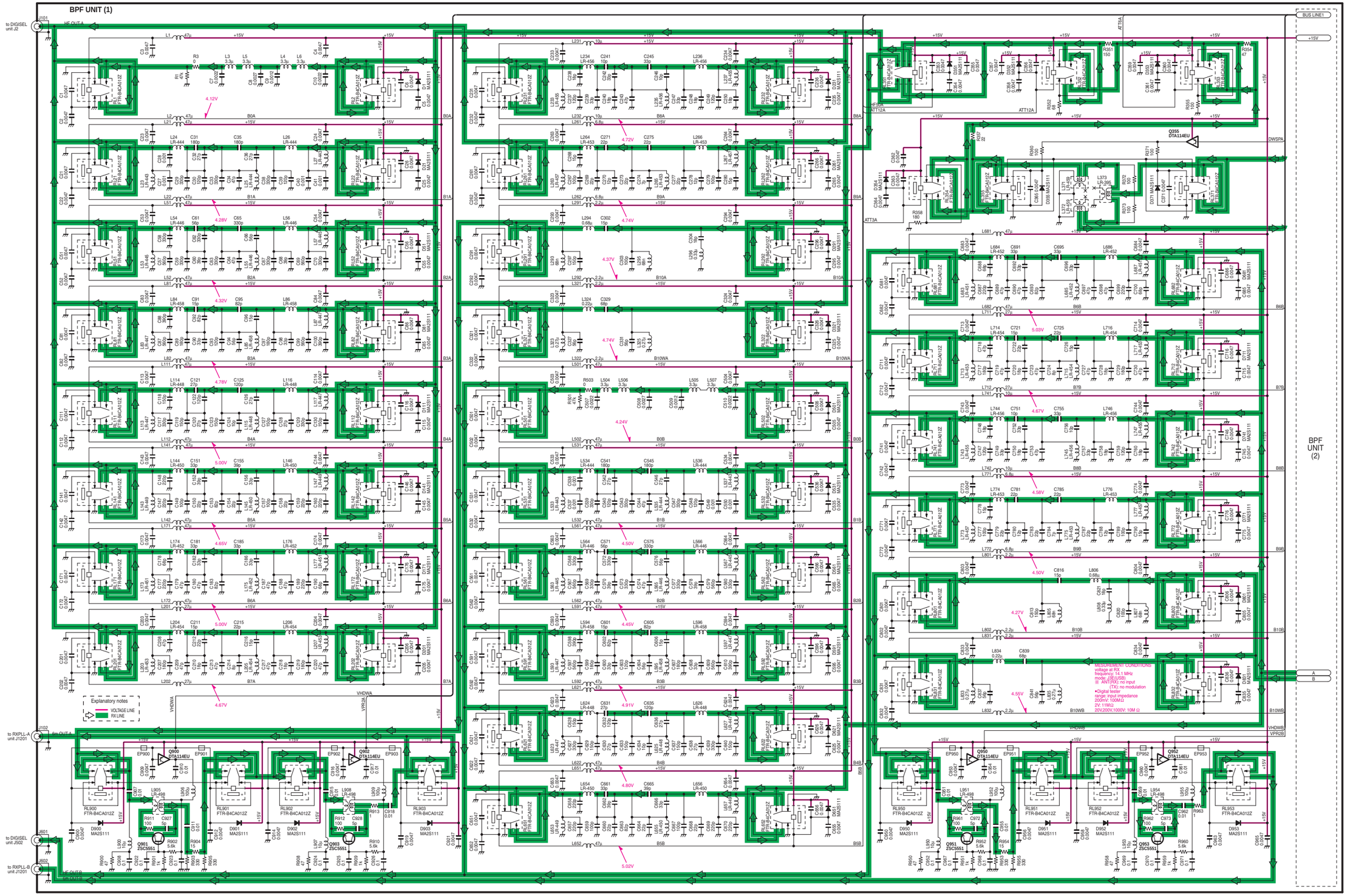

# 11-27 NETWORK BOARD

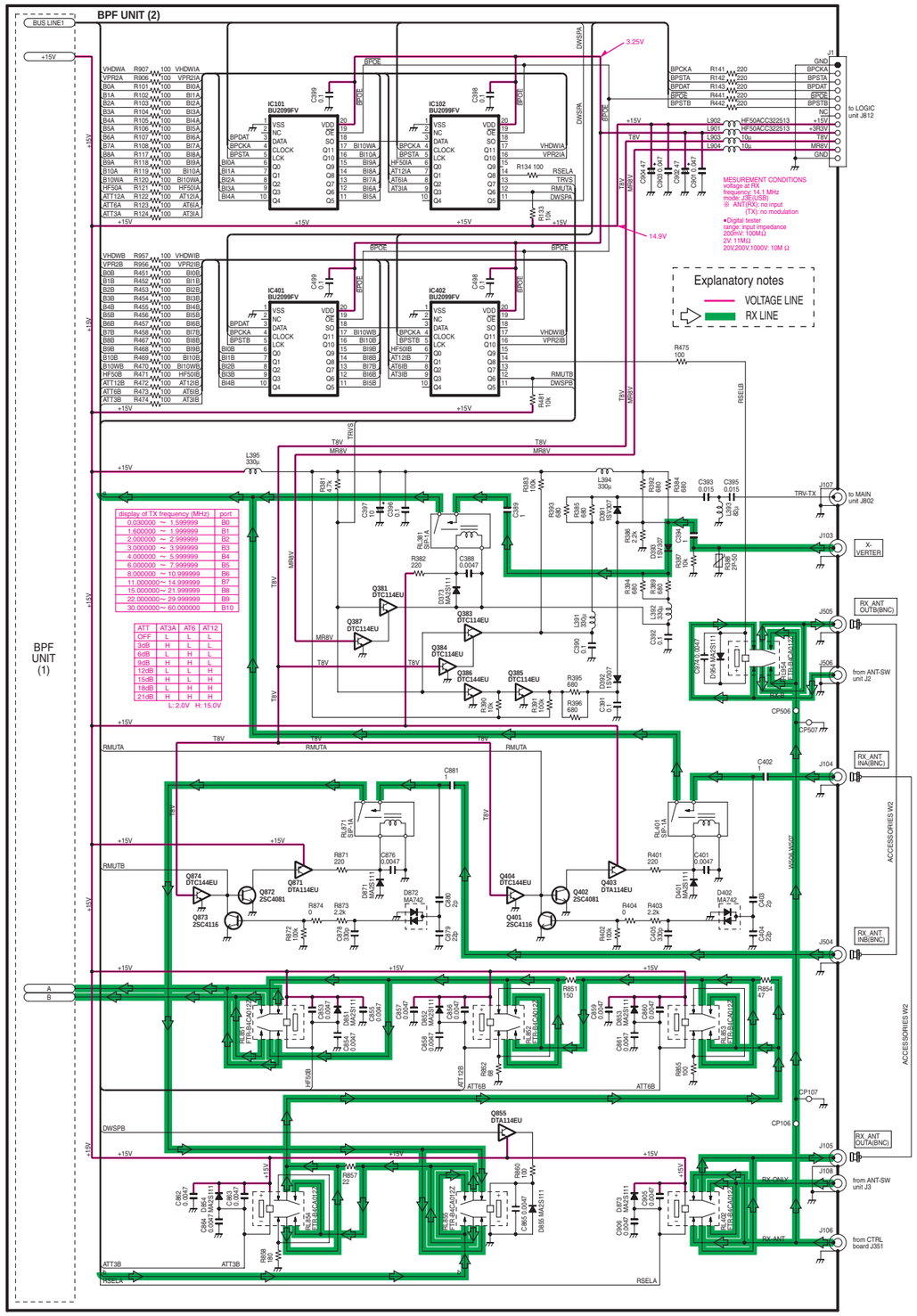


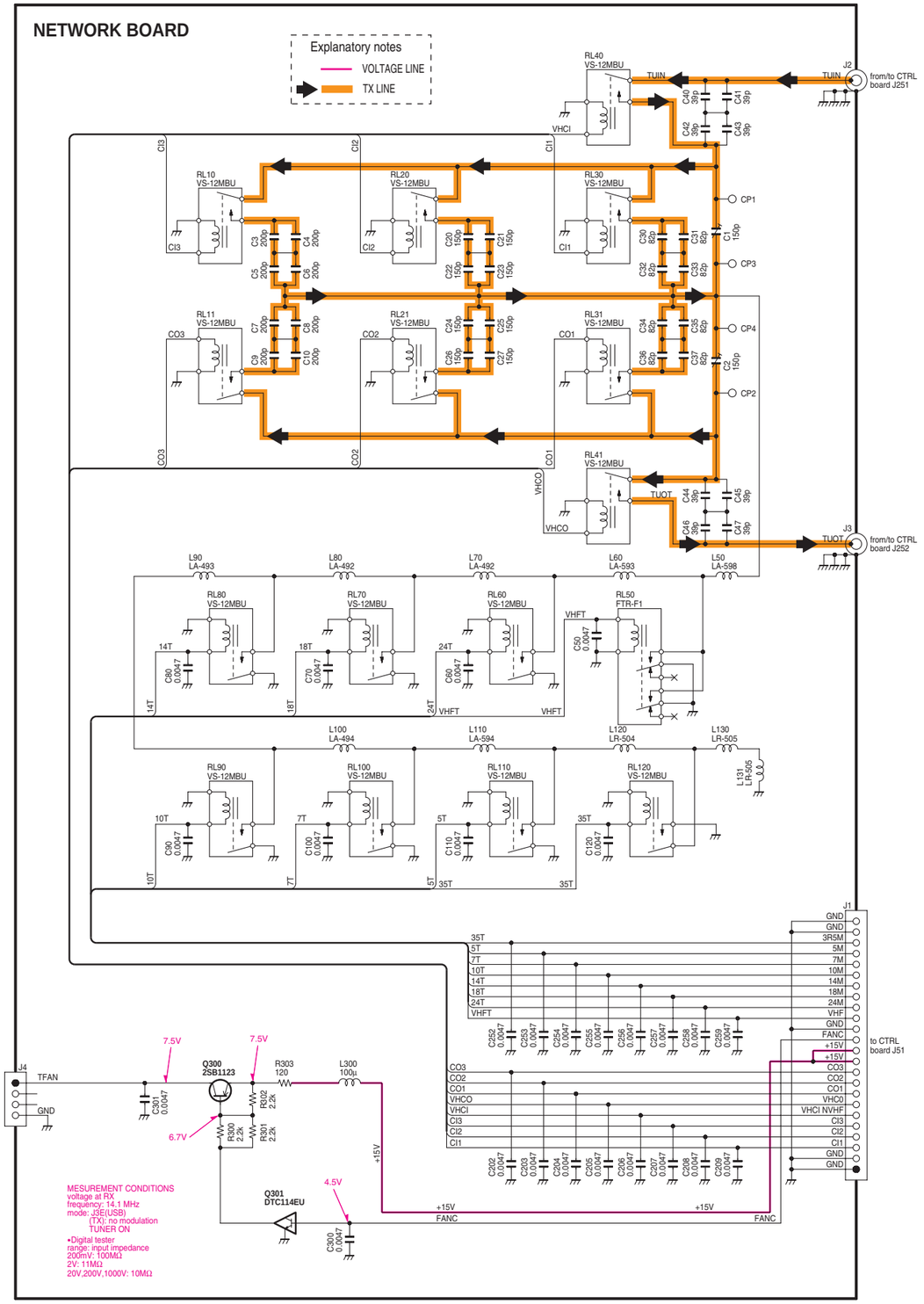

# 11-28 CTRL BOARD

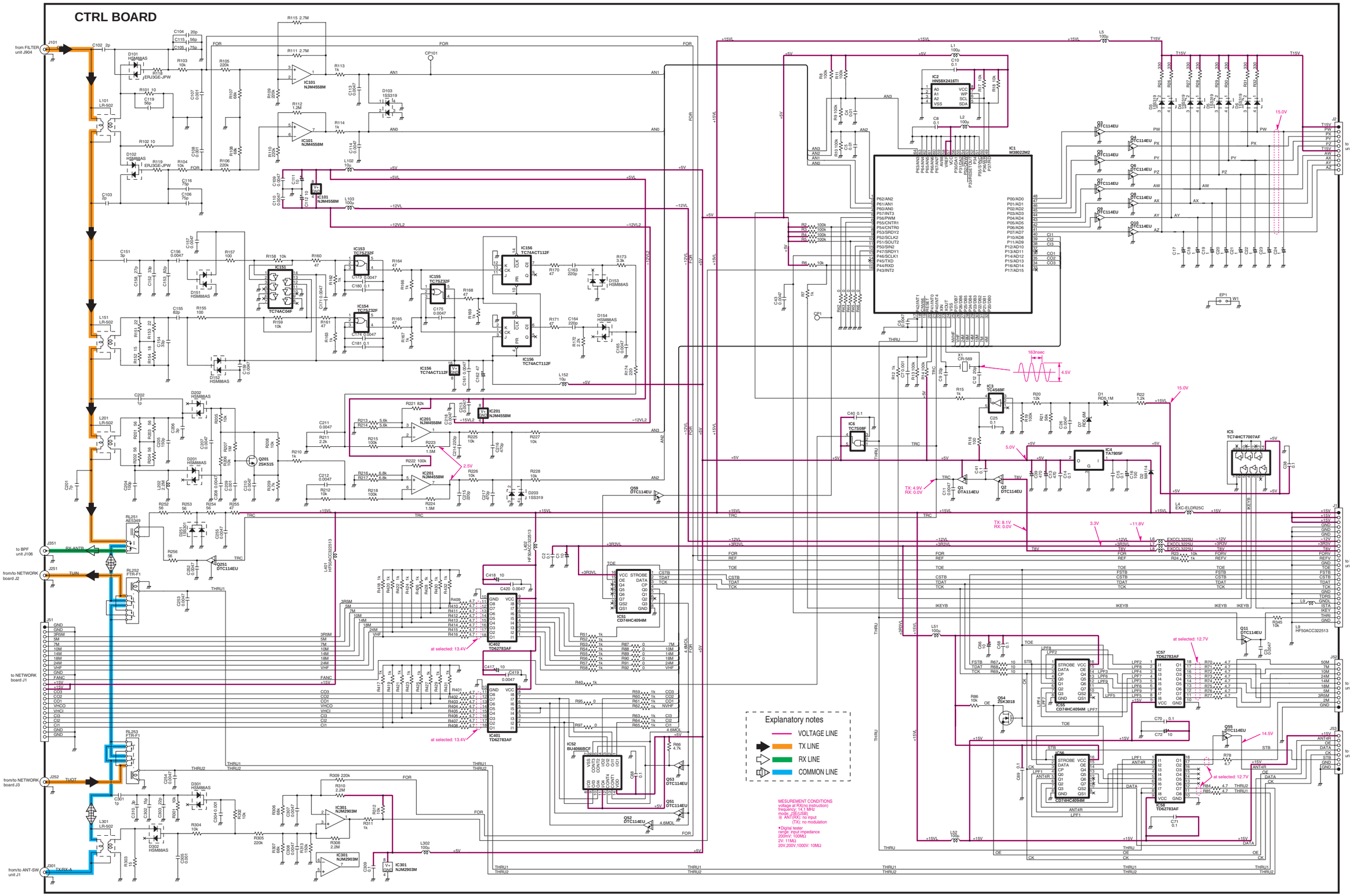

# 11-29 PA200W BOARD

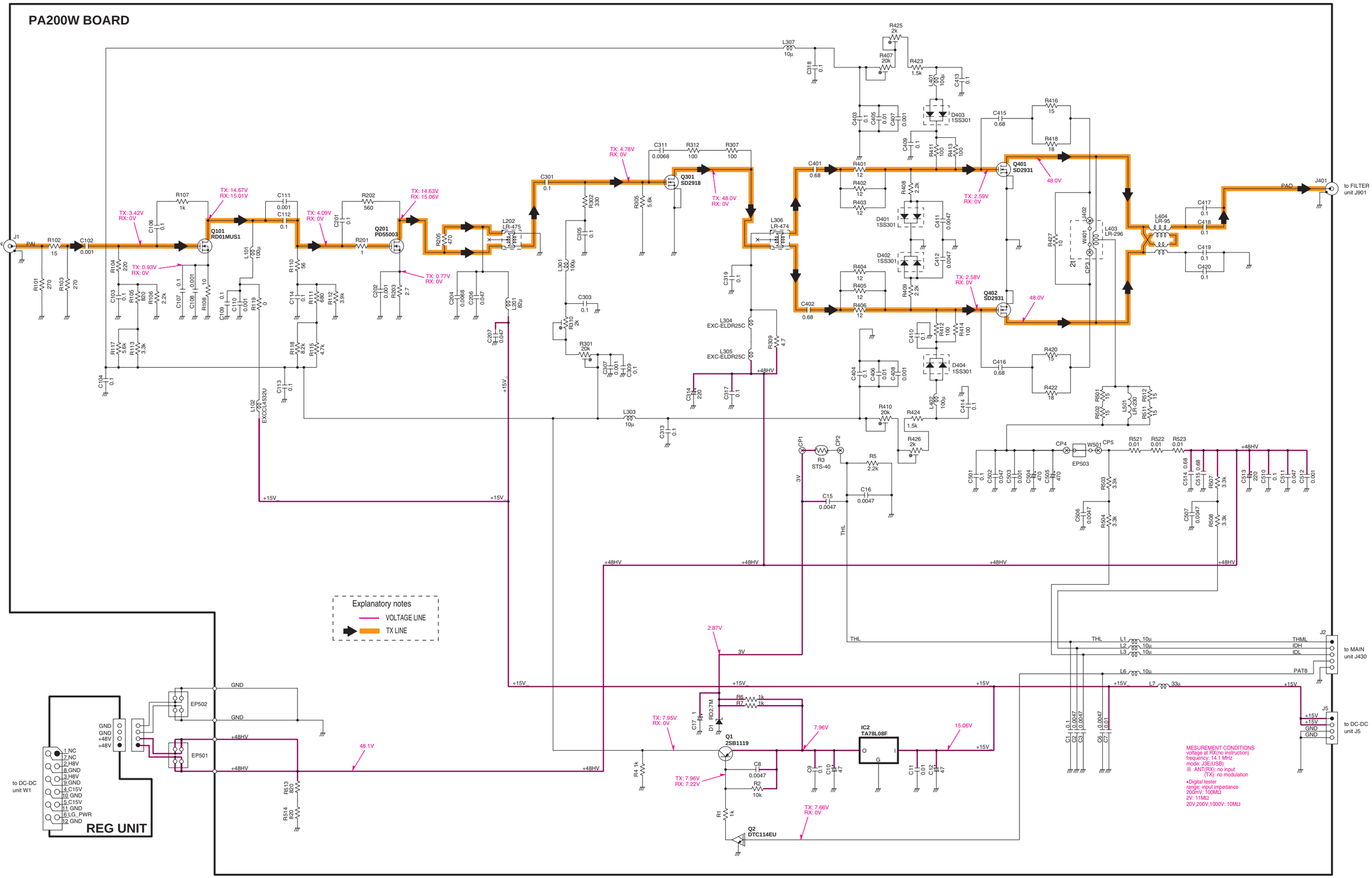

# 11-30 DC-DC UNIT

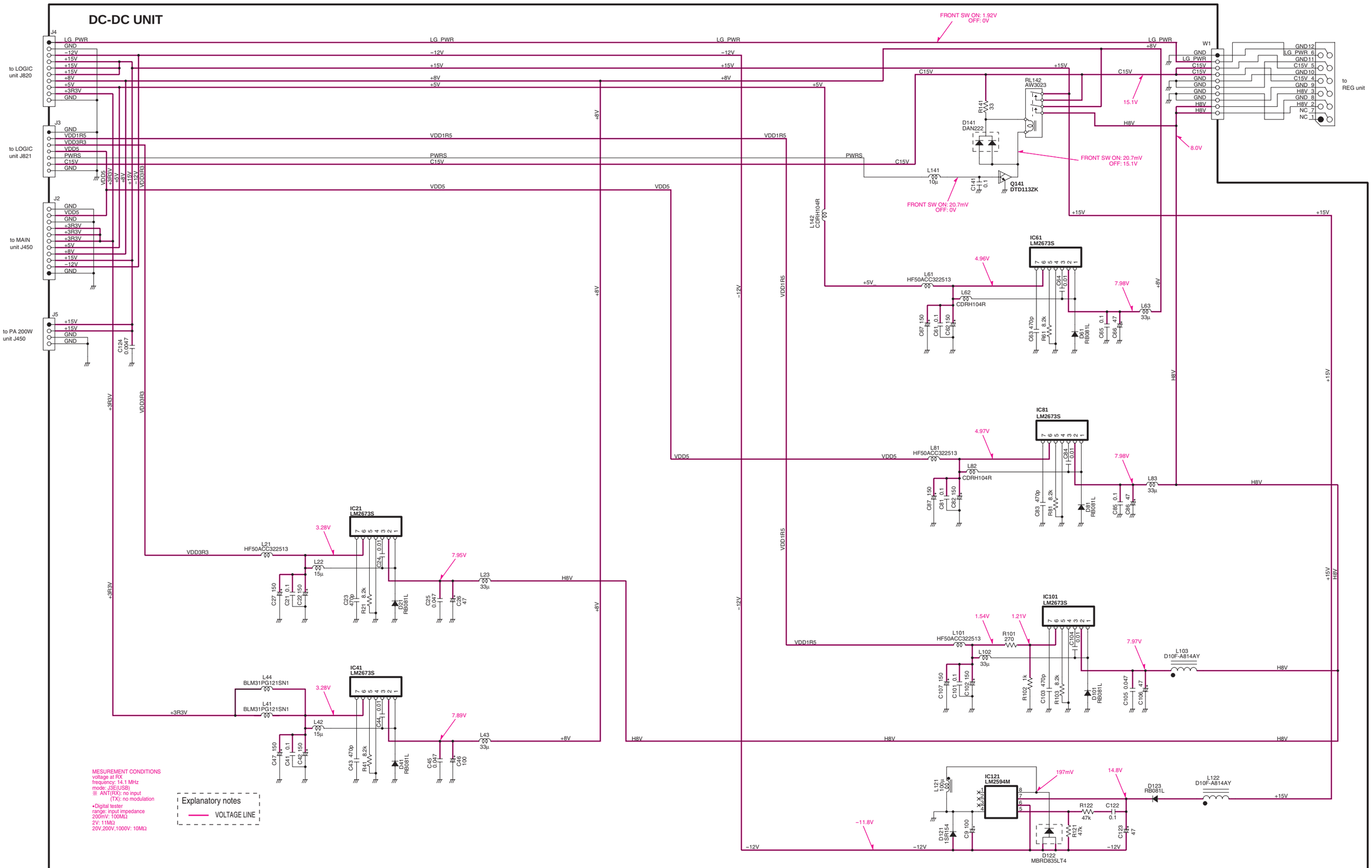

# Icom Inc.

1-1-32, Kamiminami, Hirano-ku, Osaka 547-0003, Japan
Phone : +81 (06) 6793 5302
Fax : +81 (06) 6793 0013
URL : http://www.icom.co.jp/world/index.html

## Icom America Inc.

<Corporate Headquarters>
2380 116th Avenue N.E., Bellevue, WA 98004, U.S.A.
Phone : +1 (425) 454-8155 Fax : +1 (425) 454-1509
URL : http://www.icomamerica.com
E-mail : sales@icomamerica.com
<Customer Service>
Phone : +1 (425) 454-7619

## Icom Canada

Glenwood Centre #150-6165
Highway 17 Delta, B.C., V4K 5B8, Canada
Phone : +1 (604) 952-4266 Fax : +1 (604) 952-0090
URL : http://www.icomcanada.com
E-mail : info@icomcanada.com

## Icom (Australia) Pty. Ltd.

Unit 1 / 103 Garden Road, Clayton VIC 3168 Australia
Phone : +61 (03) 9549-7500 Fax : +61 (03) 9549-7505
URL : http://www.icom.net.au
E-mail : sales@icom.net.au

## Icom New Zealand

146A Harris Road, East Tamaki,
Auckland, New Zealand
Phone : +64 (09) 274 4062 Fax : +64 (09) 274 4708
URL : http://www.icom.co.nz
E-mail : inquiries@icom.co.nz

## Beijing Icom Ltd.

10C07, Long silver Mansion, No.88, Yong Ding
Road, Haidian District, Beijing, 100039, China
Phone : +86 (010) 5889 5391/5392/5393
Fax : +86 (010) 5889 5395
E-mail : bjicom@bjicom.com
URL : http://www.bjicom.com

## Icom (Europe) GmbH

Communication Equipment
Auf der Krautweide 24
65812 Bad Soden am Taunus, Germany
Phone : +49 (6196) 76685-0 Fax : +49 (6196) 76685-50
URL : http://www.icomeurope.com
E-mail : info@icomeurope.com

## Icom Spain S.L

Ctra. Rubi, No. 88 Bajos A 08174, Sant Cugat del Valles, Barcelona, Spain
Phone : +34 (93) 590 26 70 Fax : +34 (93) 589 04 46
URL : http://www.icomspain.com
E-mail : icom@icomspain.com

## Icom (UK) Ltd.

Blacksole House, The Boulevard, Altira Business Park, Herne Bay, CT6 6GZ, UK
Phone : +44 (01227) 741741 Fax : +44 (01227) 741742
URL : http://www.icomuk.co.uk
E-mail : info@icomuk.co.uk

## Icom France s.a.s.

Zac de la Plaine
1 Rue Brindejonc des Moulinais BP 5804
31505 Toulouse Cedex, France
Phone : +33 (5) 61 36 03 03 Fax : +33 (5) 61 36 03 00
URL : http://www.icom-france.com
E-mail : icom@icom-france.com

## Asia Icom Inc.

6F No.68, Sec. 1 Cheng-Teh Road, Taipei, Taiwan, R.O.C.
Phone : +886 (02) 2559 1899 Fax : +886 (02) 2559 1874
URL : http://www.asia-icom.com
E-mail : sales@asia-icom.com

## Icom Polska

81-850 Sopot, ul. 3 Maja 54, Poland
Phone : +48 (58) 550 7135 Fax : +48 (58) 551 0484
E-mail : icompolska@icompolska.com.pl

**Count on us!**

Icom Inc.
1-1-32, Kamiminami, Hirano-ku, Osaka 547-0003, Japan

S-14015HZ-C1-②
© 2004–2006 Icom Inc.